Federal Communications Commission
Office of Engineering and Technology
Laboratory Division

June 19, 2018

WIDEBAND CONSUMER SIGNAL BOOSTER COMPLIANCE MEASUREMENT GUIDANCE

1. INTRODUCTION

1.1 Background

In February 2013 the FCC released a Report and Order (R&O, FCC 13-21) that establishes new rules for the operation of signal boosters to enhance the wireless coverage of commercial mobile voice and broadband radio services, particularly in rural, underserved, and difficult-to-serve areas, while ensuring that the boosters do not adversely affect wireless networks.[1] In 2014 and 2015, various consumer booster rules were also updated by the *Order on Reconsideration* FCC 14-138.[2] The *Second Report and Order* FCC 18-35 modified personal-use conditions for Provider-Specific Consumer Signal Boosters.[3]

The signal booster R&O creates two classes of signal boosters – consumer and industrial – with distinct regulatory requirements. Industrial boosters are not discussed further in this document; instead see KDB Publication 935210 Attachments D02 and D05 for policies and procedures.

Consumer signal boosters are defined as devices that are marketed to and sold for use by subscribers and are designed to be used "out of the box" to improve wireless coverage within a limited area such as a home, car, boat, or recreational vehicle. Subscribers should be able to install a consumer signal booster without third-party professional assistance.

Consumer signal boosters include those designed to amplify over-the-air transmissions from multiple wireless providers (wideband consumer signal boosters) and those dedicated to amplifying the signals transmitted by a single provider (provider-specific consumer signal booster). Wideband signal boosters may operate on the frequencies and in the market areas of multiple licensees (service providers). Provider-specific (frequency-selective) signal boosters may operate only on the frequencies and in the market area of specific licensees. Wideband and provider-specific consumer signal boosters can be either fixed (intended for operation at a fixed location with the server antenna inside a building) or mobile (intended for operation while moving, e.g., in a vehicle or boat).[4]

---

[1] FCC 13-21, *Report and Order In the Matter of Amendment of Parts 1, 2, 22, 24, 27, 90 and 95 of the Commission's Rules to Improve Wireless Coverage Through the Use of Signal Boosters*, WT Docket No. 10-4, February 20, 2013.

[2] FCC 14-138, *Amendment of Parts 1, 2, 22, 24, 27, 90 and 95 of the Commission's Rules to Improve Wireless Coverage Through the Use of Signal Boosters*, WT Docket No. 10-4, Order On Reconsideration, Adopted: September 19, 2014, Released: September 23, 2014.

[3] FCC 18-35, *Amendment of Parts 1, 2, 22, 24, 27, 90 and 95 of the Commission's Rules to Improve Wireless Coverage Through the Use of Signal Boosters*, WT Docket No. 10-4; Second Report and Order, Adopted: March 22, 2018, Released: March 23, 2018.

[4] KDB Publication 935210 D02 provides other information about typical configurations and related concepts.

The signal booster R&O introduces a network protection standard (NPS) that specifies new technical, operational, and registration requirements applicable to consumer signal boosters to minimize the potential for interference to wireless networks. Consumer signal boosters will be authorized under provider licenses subject to certain requirements. Specifically, subscribers must obtain some form of licensee consent to operate the booster; register the booster with their provider; use a booster that meets the new NPS and is FCC certificated; and operate the booster on a secondary, non-interference basis and shut it down if it causes harmful interference.

The signal booster rules are codified Section 20.21. The NPS common requirements are specified in Sections 20.21(e)(1) to (e)(7), in Section 20.21(e)(8) for wideband consumer signal boosters, and in Section 20.21(e)(9) for provider-specific (frequency-selective) consumer signal boosters.

This KDB publication provides guidance with respect to acceptable measurement procedures for demonstrating wideband consumer signal booster compliance to the applicable requirements imposed by the NPS. Note that the guidance offered herein is not directly applicable to industrial signal boosters, including distributed antenna system (DAS) boosters. For similar compliance measurement guidance applicable to industrial signal boosters and provider-specific consumer signal boosters, see Attachments D02 and D04 of KDB Publication 935210, respectively.

For additional information regarding signal booster definitions and certification requirements, see also Attachment D02 included as a part of KDB Publication 935210.[5]

Procedures for compliance measurements on consumer signal boosters operating under Section 20.21 are also provided in Clause 7 of ANSI C63.26-2015.[6] As part of the rule changes adopted by the *First Report and Order* FCC 17-93 (docket no. 15-170),[7] Sections 2.910(c) and 2.1041 were amended to include ANSI C63.26-2015 as an acceptable measurement procedures standard for equipment that operates in authorized radio services covered by its scope, where compliance measurements are required per Sections 2.1046, 2.1047, 2.1049, 2.1051, 2.1053, 2.1055, 2.1057, also 2.911(c).[8] KDB Publication 935210 D03 served as a basis for and was developed concurrently with the ANSI C63.26 measurement procedures, and as such each provides pertinent guidance for performing compliance measurements for signal boosters operating under Section 20.21.[9] As a companion document for use along with ANSI C63.26-2015, KDB Publication 935210 D03 provides rule section numbers and other information about FCC rules, policies, and procedures that is otherwise generally not part of the normative text in documents developed by the Accredited Standards Committee (ASC) C63®—Electromagnetic Compatibility (EMC).

---

[5] KDB Publication 935210, Attachment D02 Certification Requirements.

[6] ANSI C63.26-2015, *American National Standard for Compliance Testing of Transmitters*.

[7] FCC 17-93; Amendment of Parts 0, 1, 2, 15 and 18 of the Commission's Rules regarding Authorization of Radiofrequency Equipment; ET Docket No. 15-170; First Report and Order; Adopted: July 13, 2017; Released: July 14, 2017.

[8] ANSI C63.26-2015 was developed by ANSI-Accredited Standards Committee (ASC) C63® to provide equipment authorization applicants, manufacturers, and test laboratories with uniform, reliable, and consistent measurement procedures necessary to demonstrate that transmitters used in licensed radio services comply with FCC's technical requirements. ASC C63® is a standards development organization that includes participants from the wireless industry, test laboratories, and regulators. At present ASC C63® has an open project for developing various updates of ANSI C63.26; information is available at: (http://www.c63.org/documents/misc/matrix/c63_standards.htm).

[9] Applicants, test labs, and TCBs are requested to submit a KDB inquiry requesting guidance in case unclear or inconsistent provisions are found between ANSI C63.26-2015 and KDB Publication 935210.

1.2 Objective

The objective of this KDB publication is to establish and document standardized measurement procedures that will produce the data required to demonstrate that a wideband consumer signal booster is compliant with the technical requirements specified by the NPS.

1.3 Approach

The measurement procedures provided in this document represent efforts by the RF Booster Task Group of the ANSI ASC C63® SC1 Wireless Working Group[10] to develop standardized measurement methodologies that can be applied to wideband consumer signal boosters to obtain the data necessary to demonstrate compliance to the NPS requirements. This RF Booster Task Group includes representatives from signal booster manufacturers, commercial wireless service providers, compliance test laboratories, and the FCC.

Alternative measurement procedures acceptable to the Commission may also be used to provide the requisite data to demonstrate compliance to the NPS technical requirements as per Section 2.947(a)(3) of the FCC rules, but such alternative procedures must be approved by the FCC prior to use.

[10] ANSI ASC C63® SC1 is abbreviation for American National Standards Institute Accredited Standards Committee C63®—Electromagnetic Compatibility, Subcommittee 1—Techniques and Development; *see* (http://c63.org/index.htm).

1.4 Cross-references from KDB Publication 935210 D03 procedures to rule paragraphs

§ 20.21(e)(3) *Frequency Bands*	7.1 Authorized frequency band verification test
§ 20.21(e)(4) *Self-monitoring*	[11]
§ 20.21(e)(8)(i)(A) *Noise Limits* § 20.21(e)(8)(i)(H) *Transmit Power Off Mode*	7.7 Noise limits test procedure
§ 20.21(e)(8)(i)(B) *Bidirectional Capability* § 20.21(e)(3) *Frequency Bands*	7.13 Spectrum block filtering test procedure
§ 20.21(e)(8)(i)(C)(1) *Booster Gain Limits* § 20.21(e)(8)(i)(H) *Transmit Power Off Mode*	7.9 Variable booster gain test procedure
§ 20.21(e)(8)(i)(C)(2) *Booster Gain Limits* § 20.21(e)(8)(i)(B) *Bidirectional Capability*	7.3 Maximum booster gain computation
§ 20.21(e)(8)(i)(D) *Power Limits* § 20.21(e)(8)(i)(B) *Bidirectional Capability*	7.2 Maximum power measurement test procedure
§ 20.21(e)(8)(i)(E) *Out of Band Emission Limits*	7.5 Out-of-band emissions test procedure
§ 20.21(e)(8)(i)(F) *Intermodulation Limits*	7.4 Intermodulation product test procedure
§ 20.21(e)(8)(i)(G) *Booster Antenna Kitting*	[12]
§ 20.21(e)(8)(i)(H) *Transmit Power Off Mode*	[13]
§ 20.21(e)(8)(i)(I) *Uplink Inactivity*	7.8 Uplink inactivity test procedure
§ 20.21(e)(8)(ii)(A) *Anti-Oscillation* § 20.21(e)(5) *Anti-Oscillation*	7.11 Oscillation detection test procedure
§ 20.21(e)(8)(ii)(B) *Gain Control*	[14]
§ 20.21(e)(8)(ii)(C) *Interference Avoidance for Wireless Subsystems*	[15]
§ 2.1049 *Measurements required: Occupied bandwidth*	7.10 Occupied bandwidth test procedure
§ 2.1051 *Measurements required: Spurious emissions at antenna terminals*	7.6 Conducted spurious emissions test procedure
§ 2.1053 *Measurements required: Field strength of spurious radiation*	7.12 Radiated spurious emissions test procedure

2. SIGNAL BOOSTER DESCRIPTION

A signal booster is defined as a device that automatically receives, amplifies, and retransmits, on a bidirectional or unidirectional basis, the signals received from base, fixed, mobile, or portable stations, with no change in frequency or authorized bandwidth. A consumer signal booster, the subject of this KDB publication, is defined as a bidirectional signal booster that is marketed and sold for use without modification.

The bidirectional operation of consumer signal boosters can introduce ambiguities when using conventional RF input and RF output port descriptions, because a single RF port can represent both an RF input and RF output port (e.g., a downlink signal input and an uplink signal output). Thus, the terms *donor* port and *server* port are often used for bidirectional signal boosters. The term "donor port" of a

[11] There is no specific test for this functionality but it is instead indirectly addressed by the noise and gain limits tests.

[12] Generic testing requirements are not established; rather technical documentation is used describing all antennas, cables, and/or coupling devices that may be used with a consumer booster and how those meet the requirements.

[13] There is no specific test for this functionality but it is instead addressed through a combination of the variable noise, variable gain, and oscillation detection tests.

[14] Conformance to the requirement to include AGC circuitry is verified in 7.1 and 7.2.

[15] Before testing please submit a proposed test plan in a KDB inquiry for FCC review and acceptance.

bidirectional signal booster refers to the RF port that receives the downlink signal from a base station transmitter, and which also re-transmits an amplified uplink signal received from a mobile user. The term "server port" refers to the RF port that receives the uplink signal from a mobile user, and which also transmits the amplified downlink signal received from a base station transmitter. For a wideband consumer signal booster, multiple uplink and downlink bands can be used.

Consumer signal boosters can also be operated on either a fixed or mobile platform. Fixed consumer signal boosters are designed to be operated in a fixed location within a building, whereas a mobile consumer signal booster is intended to operate in a moving vehicle where both the uplink and downlink transmitting antennas are at least 20 cm from the user or any other person.

3. APPLICABLE FREQUENCY BANDS

The NPS specifies that consumer signal boosters must be designed and manufactured such that they only operate on the frequencies used for the provision of subscriber-based services under parts 22 (Cellular), 24 (Broadband PCS), 27 (AWS-1, 700 MHz Lower A-E Blocks, and 700 MHz Upper C Block), and 90 (Specialized Mobile Radio). The Commission will not certificate any consumer signal boosters for operation on Part 90 (Specialized Mobile Radio) frequencies until the Commission releases a Public Notice announcing the date consumer signal boosters may be used in the band.[16]

Appendix A of this KDB publication provides a detailed summary of the frequency bands associated with each of the wireless services itemized above.

4. OTHER APPLICABLE RULE PARTS

Most of the technical limits and requirements applicable to consumer signal boosters are specified within Section 20.21. However, in some cases the technical limits are specified as relative to the limit applicable for each particular operational frequency band (e.g., unwanted emission limits) and as such, the applicable radio service rule part must be consulted. Appendix A provides a cross-reference to the applicable rule sections for each frequency band in which consumer signal boosters are authorized to operate.

In addition, because signal boosters require part 2 subpart J certification, further to Section 2.911(c) the requirements specified in Section 2.1033 are also applicable. Therefore, the measurement guidance provided herein also includes procedures for obtaining the data required per Section 2.1033(c)(14).

5. MEASUREMENT EQUIPMENT REQUIREMENTS

5.1 General

The following paragraphs provide a list of requisite test equipment and relevant minimum capabilities necessary to perform the measurements specified within this KDB publication. All equipment used shall be appropriately calibrated prior to use in accordance with laboratory accreditation requirements.

5.2 Measurement instrumentation

Most of the measurement procedures provided herein are based on the use of a spectrum/signal analyzer or an EMI receiver with similar capabilities. The measurement instrumentation must provide the following minimum capabilities:

a) A tuning range that will permit measurements over the frequency ranges under investigation (including unwanted emissions),

[16] *See* § 20.21(e)(3).

b) A power averaging (rms) detector,
c) A trace averaging capability (i.e., the ability to average over multiple measurement traces),
d) An integrated power function (e.g., band or channel power),
e) A burst power measurement capability,
f) A peak power detector,
g) A maximum hold function.

5.3 Digital storage oscilloscope

Some of the technical requirements specified by the NPS are time-based (e.g., uplink inactivity and anti-oscillation tests). In most cases a spectrum/signal analyzer or EMI receiver operated in zero-span mode can be used to make such time domain measurements; however, a digital oscilloscope with an appropriate RF (diode) detector may also be used. Note that there may be cases where an oscilloscope with an RF detector may not provide sufficient dynamic range for performing some tests.

5.4 Test signal generators

Several of the technical requirements specified by the NPS are expressed such that one or more input signals are required when collecting the data necessary to demonstrate compliance. Thus, the capability to generate a minimum of two separate signal paths is required (two independent signal generators or one signal generator with separately-controlled dual outputs). The signal generator(s) must have the following minimum capabilities:

a) a tuning range that completely encompasses the operational frequency ranges of the booster (e.g., 100 kHz to 3 GHz),
b) a minimum output power range of −103 dBm to +20 dBm,
c) the ability to replicate CMRS signal types GSM, CDMA, W-CDMA (LTE is optional) with a pseudo-random symbol pattern,
d) the ability to generate non-pulsed and pulsed CW tones and band-limited AWGN.

5.5 Maximum transmitter test input levels

Several of the measurements will require that the booster be driven into saturation while observing the spectrum for undesired changes in the spectral envelope or unwanted emission levels (e.g., spectral regrowth).

a) The following are the maximum uplink transmitter test levels for various signal booster configurations, as referenced to the booster's uplink input (server) port. External linear amplifier(s) shall be used if these levels exceed the output power capabilities of the signal generator(s) available for these tests.

    1) Direct connect: 27 dBm,
    2) Direct contact coupling (e.g., cradle-type): 23 dBm,
    3) Mobile using inside antenna(s): 10 dBm,
    4) Fixed using inside antenna(s): 0 dBm.

b) The maximum downlink input (donor) port test level for all device types is −20 dBm.

5.6 RF step attenuators

Some measurement procedures will require that the requisite input signal power be stepped over a specified range of values. This is typically accomplished by using external RF step attenuators inserted into the input signal path. The granularity (discretization) of the measurement steps will require the use

of a combination of linear step attenuators to provide at least 0 dB to 70 dB of attenuation in 10 dB steps, 0 dB to 10 dB of attenuation in 1 dB steps, and 0 dB to 1 dB in 0.1 dB steps.

5.7 RF combiner and directional coupler

Several of the measurement procedures require that input signals be combined (e.g., intermodulation test) or that output signals be differentiated at a common port (e.g., noise and variable gain tests). The RF combiners and directional couplers used to accomplish this shall be frequency matched to the operational band under test and rated for at least 1 W of input power. RF directional couplers must provide a minimum of 10 dB of coupling loss.

5.8 RF filters

Some of the measurement procedures may require that RF filtering (band-pass and/or band-notch) be applied to enable measuring a desired signal level in the presence of an undesired signal. Tunable filters are recommended and the specific tuning ranges should be commensurate with the operational frequency range capabilities of the signal booster under test (see Appendix A). All RF filters shall be rated for at least 1 W of input power.

5.9 Impedance matching

When connected to test equipment in this specification, the EUT must be terminated in the characteristic impedance of its input port and output port. All test equipment interconnection figures included in this specification are based on test equipment whose characteristic impedance matches that of the EUT. If the EUT presents a source and/or load impedance which differs from the characteristic impedance of the test equipment, minimum-loss impedance matching pads shall be employed, and the losses associated with these pads shall be factored into all subsequent measurements.

6. MEASUREMENT CONFIGURATIONS

6.1 Conducted measurements

The procedures provided in this KDB guidance document typically use a conducted test configuration (i.e., the RF interface between the signal booster and the measurement instrumentation is established via coaxial cable and RF connectors). While coaxial cables typically provide some level of shielding from ambient signals, care should still be taken to ensure that the measurements are not influenced by strong ambient signals in the CMRS frequency ranges under test.

6.2 Radiated measurements

The measurement procedures provided for demonstrating compliance to the radiated spurious emission limits will require the use of a radiated test configuration. These measurements may be performed with the transmit antenna port(s) terminated. The test site requirements, EUT arrangement and signal maximization procedures shall be consistent with those described in ANSI C63.26. When performing radiated tests, special care should be taken to ensure isolation of the EUT from any ambient CMRS signals.

7. COMPLIANCE MEASUREMENT PROCEDURES (WIDEBAND CONSUMER SIGNAL BOOSTERS)

The following subclauses provide recommended measurement procedures for collecting the data necessary to demonstrate compliance to each of the technical regulations applicable to wideband consumer signal boosters. The user is encouraged to read completely through each procedure prior to initiating the tests.

7.1 Authorized frequency band verification test

Rule paragraph(s): Section 20.21(e)(3) *Frequency Bands.*

This test is intended to confirm that the signal booster only operates on the CMRS frequency bands authorized for use by the NPS. In addition, this test will identify the frequency at which the maximum gain is realized within each CMRS operational band, which then serves as a basis for subsequent tests.

a) Connect the EUT to the test equipment as shown in **Figure 1**. Begin with the uplink output (donor) port connected to the spectrum analyzer.
b) Set the spectrum analyzer resolution bandwidth (RBW) for 100 kHz with the video bandwidth (VBW) ≥ 3 × the RBW, using a PEAK detector with the MAX HOLD function.
c) Set the center frequency of the spectrum analyzer to the center of the operational band under test with a span of 1 MHz.
d) Set the signal generator for CW mode and tune to the center frequency of the operational band under test.
e) Set the initial signal generator power to a level that is at least 6 dB below the AGC level specified by the manufacturer.
f) Slowly increase the signal generator power level until the output signal reaches the AGC operational level.
g) Reduce the signal generator power to a level that is 3 dB below the level noted above, then manually reset the EUT (e.g., cycle ac/dc power).
h) Reset the spectrum analyzer span to 2 × the width of the CMRS band under test. Adjust the tuned frequency of the signal generator to sweep 2 × the width of the CMRS band using the sweep function. The AGC must be deactivated throughout the entire sweep.
i) Using three markers, identify the CMRS band edges and the frequency with the highest power. Affirm that the values of all markers are visible on the display of the spectrum analyzer (e.g., marker table set to on).
j) Capture the spectrum analyzer trace for inclusion in the test report.
k) Repeat 7.1c) to 7.1j) for all operational uplink and downlink bands.

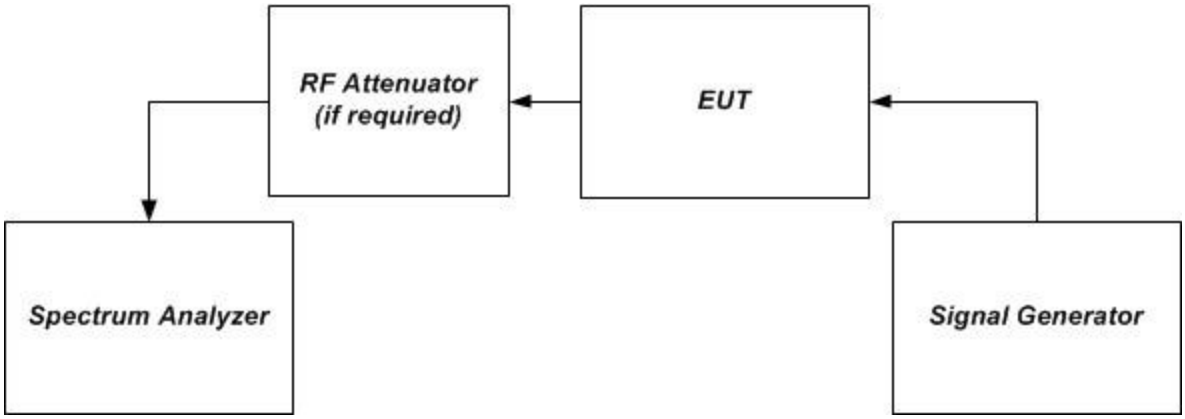

Figure 1 – Band verification test instrumentation setup

7.2 Maximum power measurement test procedure

7.2.1 General

Rule paragraph(s): Section 20.21(e)(8)(i)(D) *Power Limits*; Section 20.21(e)(8)(i)(B) *Bidirectional Capability* (uplink minimum conducted power output).

This procedure shall be used to demonstrate compliance to the signal booster power limits and requirements as specified in Sections 20.21(e)(8)(i)(D) and 20.21(e)(8)(i)(B) for wideband consumer signal boosters.

a) Compliance to applicable EIRP limits must be shown using the highest gains from the list of antennas, cabling, and coupling devices declared by the manufacturer for use with the consumer booster.
b) In addition, the maximum power levels measured in this procedure will be used in calculating the maximum gain as described in the next subclause.
c) The frequency with the highest power level in each operational band as determined in 7.1 is to be measured discretely by applying the following procedure using the stated emission and power detector types independently.
d) Use a signal generator to create a pulsed CW or GSM signal with a pulse width of 570 µs and a duty cycle of 12.5% (i.e., one GSM timeslot), then measure using the burst power function of the measuring instrument.
e) Use a signal generator to create an AWGN signal with a 99% occupied bandwidth (OBW) of 4.1 MHz, then measure using the channel power or band power function of the measuring instrumentation.
f) All modes of operation must be verified to maintain operation within applicable limits at the maximum uplink and downlink test levels per device type as defined in 5.5, by increasing the power level in 2 dB steps from the AGC level to the maximum input level specified in 5.5.

7.2.2 Procedure

a) Connect the EUT to the test equipment as shown in **Figure 1**. Begin with the uplink output (donor) port connected to the spectrum analyzer.

b) Configure the signal generator and spectrum analyzer for operation on the frequency determined in 7.1 with the highest power level, but with the center frequency of the signal no closer than 2.5 MHz from the band edge. The spectrum analyzer span shall be set to at least 10 MHz.
c) Set the initial signal generator power to a level well below that which causes AGC activation.
d) Slowly increase the signal generator power level until the output signal reaches the AGC operational limit (from observation of signal behavior on the spectrum analyzer; i.e., no further increase in output power as input power is increased).
e) Reduce power sufficiently on the signal generator to ensure that the AGC is not controlling the power output.
f) Slowly increase the signal generator power to a level just below (and within 0.5 dB of) the AGC limit without triggering the AGC. Note the signal generator power level as P_{in}.
g) Measure the output power, P_{out}, with the spectrum analyzer as follows.
   1) Set RBW = 100 kHz for AWGN signal type, or 300 kHz for CW or GSM signal type.
   2) Set VBW ≥ 3 × RBW.
   3) Select either the BURST POWER or CHANNEL POWER measurement mode, as required for each signal type. For AWGN, the channel power integration bandwidth shall be the 99% OBW of the 4.1 MHz signal.
   4) Select the power averaging (rms) detector.
   5) Affirm that the number of measurement points per sweep ≥ (2 × span)/RBW.
      NOTE–This requirement does not apply for BURST power measurement mode.
   6) Set sweep time = auto couple, or as necessary (but no less than auto couple value).
   7) Trace average at least 100 traces in power averaging (i.e., rms) mode.
   8) Record the measured power level P_{out}, with one set of results for the GSM or CW input stimulus, and another set of results for the AWGN input stimulus.
h) Repeat step g) while increasing the signal generator amplitude in 2 dB steps until the maximum input level indicated in 5.5 is reached. If the booster has shut down at any point during the input power steps, it should be noted and step g) shall be repeated at an input level 1 dB less than that found to cause the shutdown. The test report shall include either a statement describing that the device complies at 10 dB above AGC or at the 5.5 power levels, or a table showing compliance at the additional input power(s) required.
i) Repeat the entire procedure for each operational uplink and downlink frequency band supported by the booster.
j) Provide tabulated results in the test report.

7.3 Maximum booster gain computation

Rule paragraph(s): Section 20.21(e)(8)(i)(C)(2) *Booster Gain Limits* (maximum gain);
Section 20.21(e)(8)(i)(B) *Bidirectional Capability* (equivalent uplink and downlink gain).

This subclause provides guidance for the calculation of the maximum gain, based on the results obtained from the 7.1 and 7.2 measurements. The NPS limits on maximum gain for fixed and mobile wideband consumer signal boosters are provided in Section 20.21(e)(8)(i)(C)(*2*). Additionally, Section 20.21(e)(8)(i)(B) requires that wideband consumer signal boosters be able to provide equivalent uplink and downlink gain, i.e., within 9 dB.[17]

[17] The margin for equivalent gain is a provisional specification determined by the ANSI ASC C63® task group working in collaboration and consultation with FCC OET Laboratory Division staff.

a) Calculate the maximum gain of the booster as follows to demonstrate compliance to the applicable gain limits as specified.
b) For both the uplink and downlink in each supported frequency band, use each of the P_{OUT} and P_{IN} result pairs for all signal types used in 7.2 in the following equation to obtain the maximum gain, G:

$$G\ (dB) = P_{OUT}(dBm) - P_{IN}(dBm).$$

c) Record the maximum gain of the uplink and downlink paths for each supported frequency band, and verify that the each gain value complies with the applicable limit.
d) Provide tabulated results in the test report.

7.4 Intermodulation-product test procedure

Rule paragraph(s): Section 20.21(e)(8)(i)(F) *Intermodulation Limits.*

The following procedures shall be used to demonstrate compliance to the intermodulation limit specified in Section 20.21(e)(8)(i)(F) for wideband consumer signal boosters.

a) Connect the signal booster to the test equipment as shown in **Figure 2**. Begin with the uplink output (donor) port connected to the spectrum analyzer.
b) Set the spectrum analyzer RBW = 3 kHz.
c) Set the VBW ≥ 3 × RBW.
d) Select the rms detector.
e) Set the spectrum analyzer center frequency to the center of the supported operational band under test.
f) Set the span to 5 MHz. Affirm that the number of measurement points per sweep ≥ (2 × span)/RBW.
g) Configure the two signal generators for CW operation with generator #1 tuned 300 kHz below the operational band center frequency and generator #2 tuned 300 kHz above the operational band center frequency. If the maximum output power is not at the operational-band (booster pass band) center frequency, configure the test signal pair around the frequency with maximum output power as determined per 7.2.
h) Set the signal generator amplitudes so that the power from each into the RF combiner is equivalent, then turn on the RF output.
i) Simultaneously increase each signal generators' amplitude equally until just before the EUT begins AGC, then affirm that all intermodulation-product emissions (if any occur) are below the specified limit of −19 dBm.
j) Use the trace averaging function of the spectrum analyzer, and wait for the trace to stabilize. Place a marker at the highest amplitude intermodulation-product emission.
k) Record the maximum intermodulation product amplitude level that is observed.
l) Capture the spectrum analyzer trace for inclusion in the test report.
m) Repeat 7.4e) to 7.4l) for all uplink and downlink operational bands.
NOTE–If using a single signal generator with dual outputs, affirm that intermodulation products are not the result of the generator.
n) Increase the signal generator amplitude in 2 dB steps to 10 dB above the AGC threshold determined in 7.4i), but not exceeding the maximum input level of 5.5, to affirm that the EUT maintains compliance with the intermodulation limit. The test report shall include either a statement describing

that the device complies at 10 dB above AGC or at the 5.5 power levels, or a table showing compliance at the additional input power(s) required.

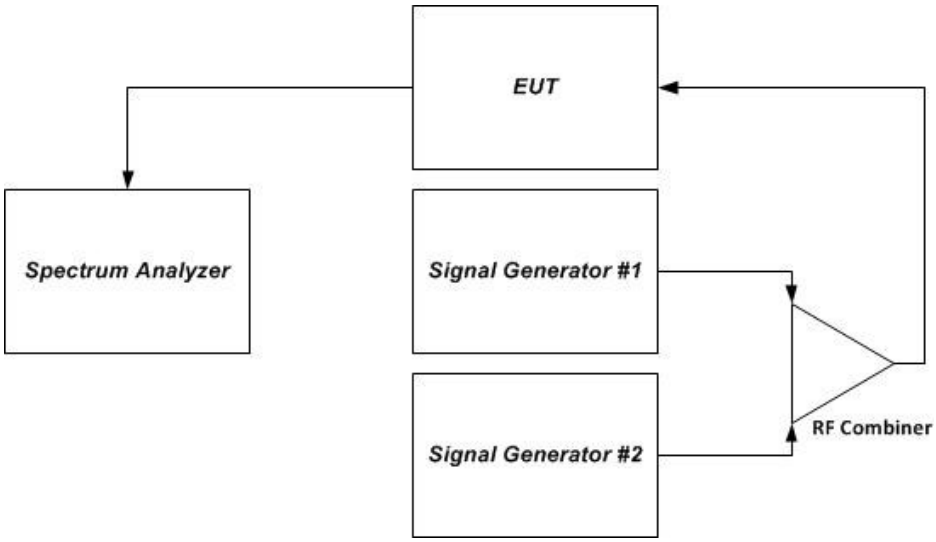

Figure 2 – Intermodulation product instrumentation test setup

7.5 Out-of-band emissions test procedure

Rule paragraph(s): Section 20.21(e)(8)(i)(E) *Out of Band Emission Limits.*

This measurement is intended to demonstrate compliance to the limit specified in Section 20.21(e)(8)(i)(E). The mobile-station emission limit is listed in Appendix A for each applicable operating band and rule part.

a) Connect the EUT to the test equipment as shown in **Figure 1**. Begin with the uplink output (donor) port connected to the spectrum analyzer.
b) Configure the signal generator for the appropriate operation for all uplink and downlink bands:

    1) GSM: 0.2 MHz from upper and lower band edges.
    2) LTE (5 MHz): 2.5 MHz from upper and lower band edges.
    3) CDMA: 1.25 MHz from upper and lower band edges, except for cellular band as follows (only the upper and lower frequencies need to be tested):
    824.88 MHz, 845.73 MHz, 836.52 MHz, 848.10 MHz,
    869.88 MHz, 890.73 MHz, 881.52 MHz, 893.10 MHz.

    NOTE 1–Alternative test modulation types:
    - CDMA (alternative 1.25 MHz AWGN)
    - LTE 5 MHz (alternative W-CDMA or 4.1 MHz AWGN)

    NOTE 2–For LTE, the signal generator should use the uplink and downlink signal types for these modulations in uplink and downlink tests, respectively. LTE shall use 5 MHz signal, 25 resource blocks transmitting.
    NOTE 3–When using an AWGN test signal, the bandwidth shall be the measured 99% OBW.

c) Set the signal generator amplitude to the maximum power level prior to AGC similar to 7.2.2e) to 7.2.2f) of the power measurement procedures for the appropriate modulations.
d) Set RBW = measurement bandwidth specified in the applicable rule section for the supported frequency band (see Appendix A for cross-reference to applicable rule section).
NOTE 3–Within 300 kHz and 3 MHz away from band edge, if smaller RBW is used (i.e., RBW < 100 kHz or 1 MHz, for above and below 1 GHz, respectively), per Parts 24 and 27 the smaller RBW is applicable only for frequencies within 100 kHz or 1 MHz (for above and below 1 GHz, respectively) away from the band edge.
e) Set VBW = 3 × RBW.
f) Select the power averaging (rms) detector.
g) Sweep time = auto-couple.
h) Set the analyzer start frequency to the upper band/block edge frequency and the stop frequency to the upper band/block edge frequency plus: 300 kHz (when operational frequency is < 1 GHz), or 3 MHz (when operational frequency is ≥ 1 GHz).
i) Trace average at least 100 traces in power averaging (i.e., rms) mode.
j) Use peak marker function to find the maximum power level.
k) Capture the spectrum analyzer trace of the power level for inclusion in the test report.
l) Increase the signal generator amplitude in 2 dB steps until the maximum input level per 5.5 is reached. Affirm that the EUT maintains compliance with the OOBE limits. The test report shall include either a statement describing that the device complies at 10 dB above AGC or at the 5.5 power levels, or a table showing compliance at the additional input power(s) required.
m) Reset the analyzer start frequency to the lower band/block edge frequency minus: 300 kHz (when operational frequency is < 1 GHz), or 3 MHz (when operational frequency is ≥ 1 GHz), and the stop frequency to the lower band/block edge frequency, then repeat 7.5i) to 7.5l).
n) Repeat 7.5b) through 7.5m) for each uplink and downlink operational band.

7.6 Conducted spurious emissions test procedure

Rule paragraph(s): Section 2.1051 *Measurements required: Spurious emissions at antenna terminals.*

The following procedures shall be used to demonstrate compliance to the applicable conducted spurious emissions limits as per Section 2.1051.

NOTE–For frequencies below 1 GHz, an RBW of 1 MHz may be used in a preliminary measurement. If non-compliant emissions are detected, a final measurement shall be made with a 100 kHz RBW. Additionally, a peak detector may also be used for the preliminary measurement. If non-compliant emissions are detected then a final measurement of these emissions shall be made with the power averaging (rms) detector.

a) Connect the EUT to the test equipment as shown in **Figure 1**. Begin with the uplink output (donor) port connected to the spectrum analyzer.
b) Configure the signal generator for AWGN with a 99% OBW of 4.1 MHz, with a center frequency corresponding to the center of the CMRS band under test.
c) Set the signal generator amplitude to the level determined in the power measurement procedure in 7.2.

d) Turn on the signal generator RF output and measure the spurious emission power levels with an appropriate measuring instrument as follows.

   1) Set RBW = measurement bandwidth specified in the applicable rule section for the operational frequency band under consideration (see Appendix A for relevant cross-references). Note that many of the individual rule sections permit the use of a narrower RBW [typically ≥ 1% of the emission bandwidth (EBW)] to enhance measurement accuracy, but the result must then be integrated over the specified measurement bandwidth.
   2) Set VBW = 3 × RBW.
   3) Select the power averaging (rms) detector. (See above note regarding the use of a peak detector for preliminary measurements.)
   4) Sweep time = auto-couple.
   5) Set the analyzer start frequency to the lowest radio frequency signal generated in the equipment, without going below 9 kHz, and the stop frequency to the lower band/block edge frequency minus 100 kHz or 1 MHz, as specified in the applicable rule part. Note that the number of measurement points in each sweep must be ≥ (2 × span/RBW), which may require that the measurement range defined by the preceding start and stop frequencies be subdivided, depending on the available number of measurement points of the spectrum analyzer. Trace average at least 10 traces in power averaging (i.e., rms) mode.
   6) Sweep time = auto-couple.
   7) Use the peak marker function to identify the highest amplitude level over each measured frequency range. Record the frequency and amplitude and capture a plot for inclusion in the test report.
   8) Reset the analyzer start frequency to the upper band/block edge frequency plus 100 kHz or 1 MHz, as specified in the applicable rule part, and the analyzer stop frequency to 10 times the highest frequency of the fundamental emission. Note that the number of measurement points in each sweep must be ≥ (2 × span/RBW) which may require that the measurement range defined by the start and stop frequencies above be subdivided, depending on the available number of measurement points provided by the spectrum analyzer.
   9) Use the peak marker function to identify the highest amplitude level over each of the measured frequency ranges. Record the frequency and amplitude and capture a plot for inclusion in the test report.

e) Repeat 7.6b) through 7.6d) for each supported frequency band of operation.

7.7 Noise limits test procedure

Rule paragraph(s): Section 20.21(e)(8)(i)(A) *Noise Limits* (uplink); Section 20.21(e)(8)(i)(H) *Transmit Power Off Mode* (uplink and downlink noise power).

7.7.1 Maximum transmitter noise power level

a) Connect the EUT to the test equipment as shown in **Figure 3**. Begin with the uplink output (donor) port connected to the spectrum analyzer. When measuring downlink noise, connect the downlink output (server) port to the spectrum analyzer.
b) Set the spectrum analyzer RBW to 1 MHz with the VBW ≥ 3 × RBW.
c) Select the power averaging (rms) detector and trace average over at least 100 traces.

d) Set the center frequency of the spectrum analyzer to the center of the CMRS band under test with the span ≥ 2 × the CMRS band.
e) Measure the maximum transmitter noise power level.
f) Save the spectrum analyzer plot as necessary for inclusion in the final test report.
g) Repeat 7.7b) to 7.7f) for all operational uplink and downlink bands.
h) Connect the EUT to the test equipment as shown in **Figure 4** for uplink noise power measurement in the presence a downlink signal. Affirm the coupled path of the RF coupler is connected to the spectrum analyzer.
i) Configure the signal generator for AWGN operation with a 99% OBW of 4.1 MHz.
j) Set the spectrum analyzer RBW for 1 MHz, VBW ≥ 3 × RBW, with a power averaging (rms) detector with at least 100 trace averages.
k) Set the center frequency of the spectrum analyzer to the center of the CMRS band under test, with the span ≥ 2 × the CMRS band. This shall include all spectrum blocks in the particular CMRS band under test (see Appendix A).
l) For uplink noise measurements, set the spectrum analyzer center frequency for the uplink band under test, and tune the signal generator to the center of the paired downlink band.
m) Measure the maximum transmitter noise power level while varying the downlink signal generator output level from −90 dBm to −20 dBm, as measured at the input port (i.e., downlink signal level at the booster donor port node of Figure 4), in 1 dB steps inside the RSSI-dependent region, and in 10 dB steps outside the RSSI-dependent region. Report the six values closest to the limit, with at least two points within the RSSI-dependent region of the limit. See Appendix D for noise limits graphs.
n) Repeat 7.7.1h) through 7.7.1m) for all operational uplink bands.

NOTE–Some signal boosters will require a signal generator input because they will not operate unless a signal is received at the input terminals. If this is the case, for the setups shown in Figure 3 and Figure 4 connect a second signal generator at the server port, then cycle the RF output of the second signal generator to simulate this function.

NOTE-Some signal boosters have a maximum transmitter noise power level that is less than the Transmit Power Off Mode of -70 dBm. For these boosters it is still necessary to confirm that the uplink noise power limits are met in the presence of a downlink signal. Test reports should show measurement data demonstrating compliance. Alternatively the applicant may provide attestation with detailed design information and explanation justifying the omission of the variable uplink testing.

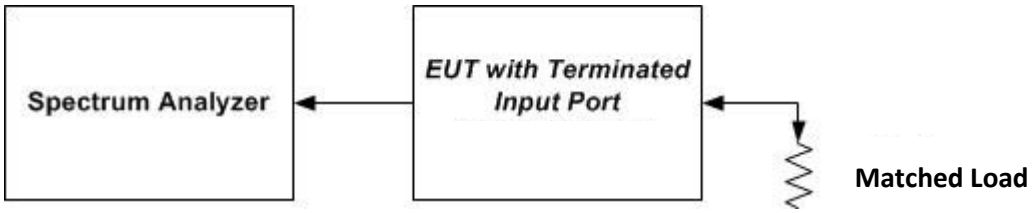

Figure 3 – Noise limit test setup (also used for 7.8)

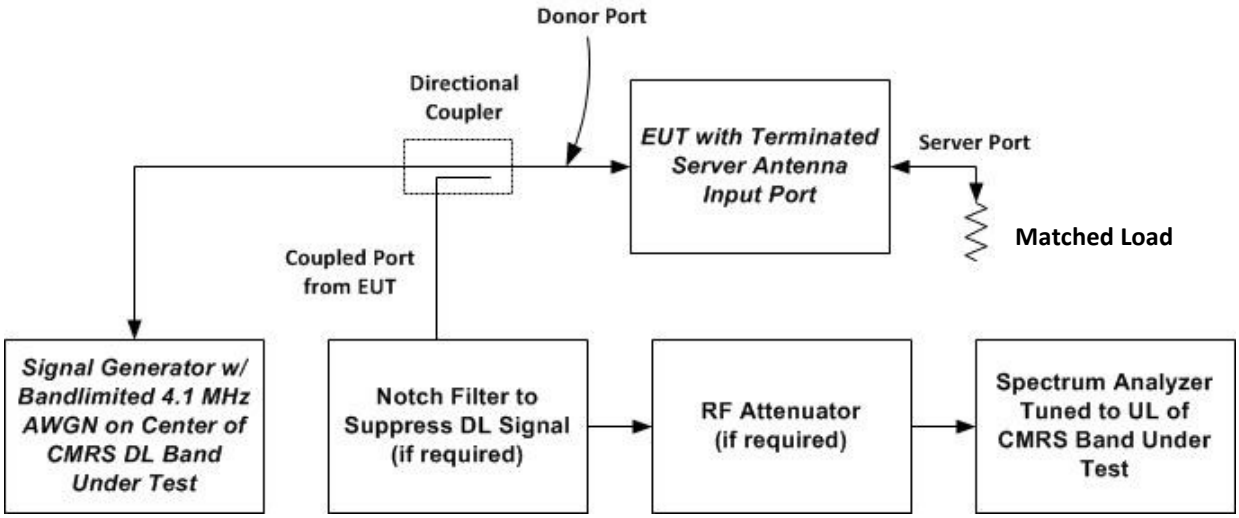

Figure 4 – Test setup for uplink noise power measurement in the presence of a downlink signal

7.7.2 Variable uplink noise timing

Variable uplink noise timing is to be measured as follows, using the test setup shown in Figure 4.

a) Set the spectrum analyzer to the uplink frequency to be measured.
b) Set the span to 0 Hz, with a sweep time of 10 seconds.
c) Set the power level of signal generator to the lowest level of the RSSI-dependent noise [see 7.7.1m)].
d) Select MAX HOLD and increase the power level of signal generator by 10 dB for mobile boosters, and 20 dB for fixed boosters.
e) Confirm that the uplink noise decreases to the specified level within 1 second for mobile devices, and within 3 seconds for fixed devices.[18]
f) Repeat 7.7.2a) to 7.7.2e) for all operational uplink bands.
g) Include plots and summary table in test report.

7.8 Uplink inactivity test procedure

Rule paragraph(s): Section 20.21(e)(8)(i)(I) *Uplink Inactivity.*

This measurement procedure is intended to demonstrate compliance to the uplink inactivity requirements specified for wideband consumer signal boosters in Section 20.21(e)(8)(i)(I).

a) Connect the EUT to the test equipment as shown in **Figure 3** with the uplink output (donor) port connected to the spectrum analyzer.

[18] The time response requirements are provisional and are as determined by the ANSI ASC C63® task group in collaboration and consultation with FCC OET Laboratory Division staff.

NOTE–Some signal boosters will require a signal generator input because they will not operate unless a signal is received at the input terminals. If this is the case for the setup shown in Figure 3 connect a signal generator at the server port, then cycle the RF output of the signal generator to simulate this function.

b) Select the power averaging (rms) detector.
c) Set the spectrum analyzer RBW for 1 MHz with the VBW ≥ 3 × RBW.
d) Set the center frequency of the spectrum analyzer to the center of the uplink operational band.
e) Set the span for 0 Hz with a single sweep time for a minimum of 330 seconds.
f) Start to capture a new trace using MAX HOLD.
g) After approximately 15 seconds, turn on the EUT power.
h) After the full spectrum analyzer trace is complete, place a MARKER on the leading edge of the pulse, then use the DELTA MARKER METHOD to measure the time until the uplink becomes inactive.
i) Affirm that the noise level is below the uplink inactivity noise power limit, as specified by the rules.
j) Capture the plot for inclusion in the test report.
k) Measure noise using procedures in 7.7.1a) to 7.7.1f).
l) Repeat 7.8d) through 7.8k) for all operational uplink bands.

NOTE-Some signal boosters have a maximum transmitter noise power level that is less than the uplink inactivity limit. For these boosters it is still necessary to confirm the uplink activity timing requirement. Test reports should show measurement data demonstrating compliance. Alternatively the applicant may provide attestation with detailed design information and explanation justifying the omission of the uplink inactivity test procedure.

7.9 Variable booster gain test procedure

Rule paragraph(s): Section 20.21(e)(8)(i)(C)(1) *Booster Gain Limits* (variable gain);
Section 20.21(e)(8)(i)(H) *Transmit Power Off Mode* (uplink gain).

7.9.1 Variable gain

This procedure shall be used to demonstrate compliance to the booster gain limits specified for wideband consumer signal boosters in Section 20.21(e)(8)(i)(C) or Section 20.21(e)(8)(i)(H). The variable booster gain limits are expressed as a function of RSSI and MSCL, and are shown graphically in Appendix D. The RSSI is varied over a range of values as specified within the procedure. Refer to Appendix B of this document for guidance on determining the applicable MSCL value.

a) Connect the EUT to the test equipment as shown in **Figure 5** with the uplink output (donor) port connected to signal generator #1. Affirm that the coupled path of the RF coupler is connected to the spectrum analyzer.
b) Configure downlink signal generator #1 for AWGN operation with a 99% OBW of 4.1 MHz, tuned to the center of the operational band.
c) Set the power level and frequency of signal generator #2 to a value that is 5 dB below the AGC level determined from 7.2. The signal type is AWGN with a 99% OBW of 4.1 MHz.
d) Set RBW = 100 kHz.
e) Set VBW ≥ 300 kHz.
f) Select the CHANNEL POWER measurement mode.
g) Select the power averaging (rms) detector.

h) Affirm that the number of measurement points per sweep ≥ (2 × span)/RBW.
i) Sweep time = auto couple or as necessary (but no less than auto couple value).
j) Trace average at least 10 traces in power averaging (i.e., rms) mode.
k) Measure the maximum channel power and compute maximum gain when varying the signal generator #1 output to a level from −90 dBm to −20 dBm, as measured at the input port (i.e., downlink signal level at the booster donor port node of Figure 5), in 1 dB steps inside the RSSI-dependent region, and 10 dB steps outside the RSSI-dependent region. Report the six values closest to the limit, including at least two points from within the RSSI-dependent region of operation. See gain limit in charts in Appendix D for uplink gain requirements. Additionally, document that the EUT provides equivalent uplink and downlink gain, and when operating in shutoff mode that the uplink and downlink gain is within the transmit power off mode gain limits.
l) Repeat 7.9.1b) to 7.9.1k) for all operational uplink bands.

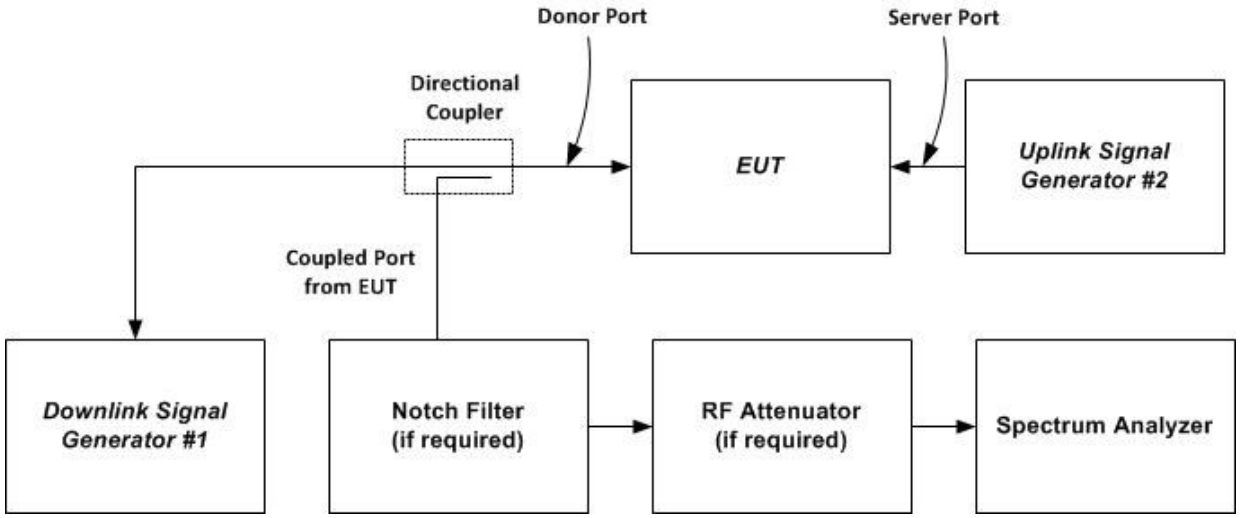

Figure 5 – Variable gain instrumentation test setup

7.9.2 Variable uplink gain timing

Variable uplink gain timing is to be measured as follows, using the test setup shown in Figure 5.

a) Set the spectrum analyzer to the uplink frequency to be measured.
b) Set the span to 0 Hz with a sweep time of 10 seconds.
c) Set the power level of signal generator #1 to the lowest level of the RSSI-dependent gain [see 7.9.1k)].
d) Select MAX HOLD and increase the power level of signal generator #1 by 10 dB for mobile boosters, and by 20 dB for fixed indoor boosters. Signal generator #2 remains same, as described in 7.9.1c).
e) Confirm that the uplink gain decreases to the specified levels, within 1 second for mobile devices, and within 3 seconds for fixed devices.[19]
f) Repeat 7.9.2a) to 7.9.2e) for all operational uplink bands.

[19] The time response requirements are provisional and are as determined by the ANSI ASC C63® task group in collaboration and consultation with FCC OET Laboratory Division staff.

7.10 Occupied bandwidth test procedure

Rule paragraph(s): Section 2.1049 *Measurements required: Occupied bandwidth.*

This measurement is required to compare the consistency of the output signal relative to the input signal, and to satisfy the requirements of Section 2.1049.

a) Connect the test equipment as shown in **Figure 6** to firstly measure the characteristics of the test signals produced by the signal generator.
b) Set VBW ≥ 3 × RBW.
c) Set the center frequency of the spectrum analyzer to the center of the operational band. The span will be adjusted for each modulation type and OBW as necessary for accurately viewing the signals.
d) Set the signal generator for power level to match the values obtained from the tests of 7.2.
e) Set the signal generator modulation type for GSM with a PRBS pattern and allow the trace on the signal generator to stabilize adjusting the span as necessary.
f) Set the spectrum analyzer RBW for 1% to 5% of the EBW.
g) Capture the spectrum analyzer trace for inclusion in the test report.
h) Repeat 7.10c) to 7.10g) for CDMA and W-CDMA modulation, adjusting the span as necessary. AWGN or LTE may be used in place of W-CDMA, as an option.
i) Repeat 7.10c) to 7.10h) for all uplink and downlink operational bands.
j) Connect the test equipment as shown in **Figure 1**, with the uplink output (donor) port connected to the spectrum analyzer, and the server port connected to the signal generator.
k) Repeat 7.10c) to 7.10i) with this EUT uplink path test setup.
l) Connect the test equipment as shown in **Figure 1**, with the downlink output (server) port connected to the spectrum analyzer, and the donor port connected to the signal generator.
m) Repeat 7.10c) to 7.10i) with this EUT downlink path test setup.

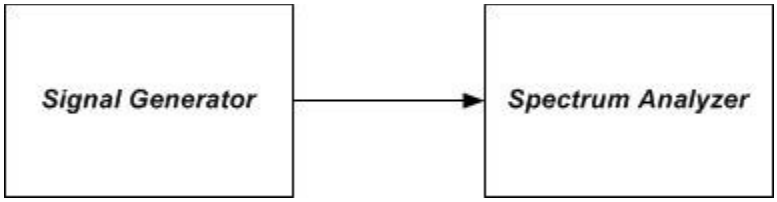

Figure 6 – Test setup for measuring characteristics of test signals used for subsequent EUT occupied bandwidth testing

7.11 Oscillation testing procedures

Rule paragraph(s): Section 20.21(e)(8)(ii)(A) *Anti-Oscillation.*

7.11.1 General

Use of two EUTs is permitted for this measurement, which can greatly reduce the test time required. One EUT shall operate in a normal mode, and the second EUT shall operate in a test mode that is capable of disabling the uplink inactivity function and/or allows a reduction to 5 seconds of the time between restarts.

The procedures in 7.11.3 and 7.11.4 do not apply for devices that operate only as direct-connection mobile boosters having gain of less than or equal to 15 dB.

7.11.2 Oscillation restart tests

a) Connect the normal-operating mode EUT to the test equipment as shown in **Figure 7** beginning with the spectrum analyzer on the uplink output (donor) port. Confirm that the RF coupled path is connected to the spectrum analyzer.
NOTE–The band-pass filter shall provide sufficient out-of-band rejection to prevent oscillations from occurring in bands not under test.
b) Spectrum analyzer settings:

    1) Center frequency at the center of the band under test
    2) Span equal or slightly exceeding the width of the band under test
    3) Continuous sweep, max-hold
    4) RBW ≥ 1 MHz, VBW > 3 × RBW

c) Decrease the variable attenuator until the spectrum analyzer displays a signal within the band under test. Using a marker, identify the approximate center frequency of this signal on the max-hold display, increase the attenuation by 10 dB, then reset the EUT (e.g., cycle ac/dc power).
d) Repeat 7.11.2c) twice to ensure that the center of the signal created by the booster remains within 250 kHz of the spectrum analyzer display center frequency. If the frequency of the signal is unstable, confirm that the spectrum analyzer display is centered between the frequency extremes observed. If the signal is wider than 1 MHz, ensure that the spectrum analyzer display is centered on the signal by increasing the RBW. Reset the EUT (e.g., cycle ac/dc power) after each oscillation event, if necessary. Set the spectrum analyzer sweep trigger level to just below the peak amplitude of the displayed EUT oscillation signal.
e) Set the spectrum analyzer to zero-span, with a sweep time of 5 seconds, and single-sweep with max-hold. The spectrum analyzer sweep trigger level in this and the subsequent steps shall be the level identified in 7.11.2d).
f) Decrease the variable attenuator until the spectrum analyzer sweep is triggered, increase the attenuation by 10 dB, then reset the EUT (e.g., cycle ac/dc power).
g) Reset the zero-span trigger of the spectrum analyzer, then repeat 7.11.2f) twice to ensure that the spectrum analyzer is reliably triggered, resetting the EUT (e.g., cycle ac/dc power) after each oscillation event if necessary.
h) Reset the zero-span sweep trigger of the spectrum analyzer, and reset the EUT (e.g., cycle ac/dc power).
i) Force the EUT into oscillation by reducing the attenuation.
j) Use the marker function of the spectrum analyzer to measure the time from the onset of oscillation until the EUT turns off, by setting Marker 1 on the leading edge of the oscillation signal and Marker 2 on the trailing edge. The spectrum analyzer sweep time may be adjusted to improve the time resolution of these cursors.
k) Capture the spectrum analyzer zero-span trace for inclusion in the test report. Report the power level associated with the oscillation separately if it can't be displayed on the trace.
l) Repeat 7.11.2b) to 7.11.2k) for all operational uplink and downlink bands.

m) Set the spectrum analyzer zero-span sweep time for longer than 60 seconds, then measure the restart time for each operational uplink and downlink band.
n) Replace the normal-operating mode EUT with the EUT that supports an anti-oscillation test mode.
o) Set the spectrum analyzer zero-span time for a minimum of 120 seconds, and a single sweep.
p) Manually trigger the spectrum analyzer zero-span sweep, and manually force the booster into oscillation as described in 7.11.2i).
q) When the sweep is complete, place cursors between the first two oscillation detections, and save the plot for inclusion in the test report. The time between restarts must match the manufacturer's timing for the test mode, and there shall be no more than 5 restarts.
r) Repeat 7.11.2m) to 7.11.2q) for all operational uplink and downlink bands.

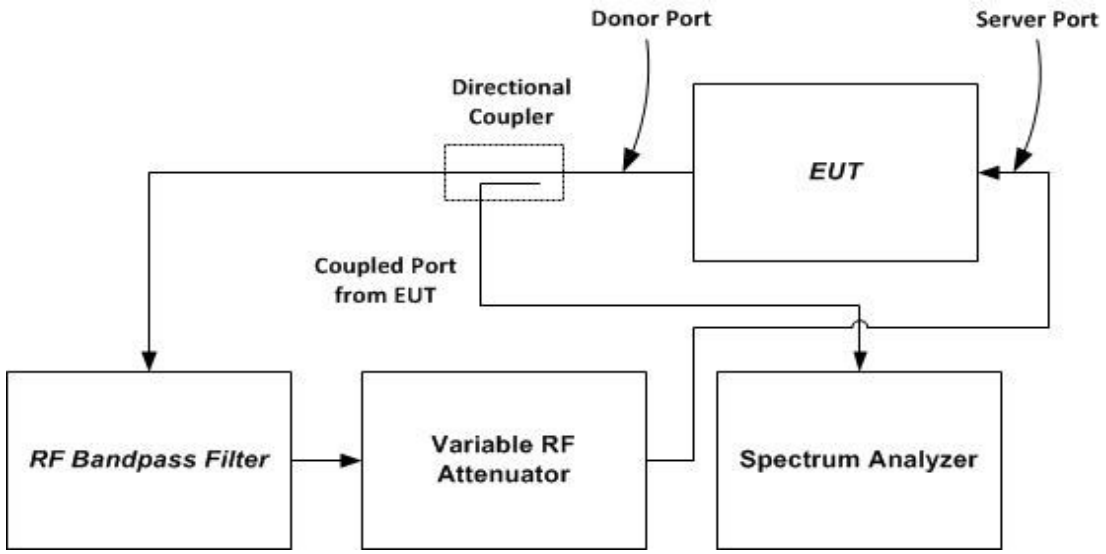

NOTE—This figure shows the test setup for uplink bands transmission path tests; i.e., signal flow is out from the donor port into the directional coupler. For downlink bands transmission path tests, the feedback signal flow path direction and equipment connections shall be reversed, i.e., signal flow is out from the server port into the directional coupler, and signal flow is into the donor port from the variable RF attenuator.

Figure 7 – Oscillation detection (7.11.2) test setup

7.11.3 Test procedure for measuring oscillation mitigation or shutdown

a) Connect the normal-operating mode EUT to the test equipment as shown in **Figure 8**.
b) Set the spectrum analyzer center frequency to the center of band under test, and use the following settings:
   1) RBW=30 kHz, VBW ≥ 3 × RBW,
   2) power averaging (rms) detector,
   3) trace averages ≥ 100,
   4) span ≥ 120% of operational band under test,
   5) number of sweep points ≥ 2 × Span/RBW.

   NOTE—To measure 120% of the band under test in one span with spectrum analyzers having less than the required number of sweep points: Perform pretests with span equal to smaller band segments, such that 120% of the operational band is captured in multiple tests, using the setup

parameters specified; record the center frequency of the strongest oscillation level occurring, and affirm this frequency is within the span and band segment used in this test.

c) Configure the signal generator for AWGN operation with a 99% OBW of 4.1 MHz, tuned to the frequency of 2.5 MHz above the lower edge or below the upper edge of the operating band under test. Adjust the RF output level of the signal generator such that the measured power level of the AWGN signal at the output port of the booster is 30 dB less than the maximum power of the booster for the band under test. Affirm that the input signal is not obstructing the measurement of the strongest oscillation peak in the band, and is not included within the span in the measurement.
   1) Boosters with operating spectrum passbands of 10 MHz or less may use a CW signal source at the band edge rather than AWGN.
   2) For device passbands greater than 10 MHz, standard CMRS signal sources (i.e., CDMA, W-CDMA, LTE) may be used instead of AWGN at the band edge.

d) Set the variable attenuator to a high attenuation setting such that the booster will operate at maximum gain when powered on. Reset the the EUT (e.g., cycle ac/dc power). Allow the EUT to complete its boot-up process, to reach full operational gain, and to stabilize its operation.

e) Set the variable attenuator such that the insertion loss for the center of the band under test (isolation) between the booster donor port and server port is 5 dB greater than the maximum gain, as recorded in the maximum gain test procedure (see 7.3), for the band under test.

f) Verify the EUT shuts down, i.e., to mitigate the oscillations. If the booster does not shut down, measure and verify the peak oscillation level as follows.

   1) Allow the spectrum analyzer trace to stabilize.
   2) Place the marker at the highest oscillation level occurring within the span, and record its output level and frequency.
   3) Set the spectrum analyzer center frequency to the frequency with the highest oscillation signal level, and reduce the span such that the upper and lower adjacent oscillation peaks are within the span.
   4) Use the Minimum Search Marker function to find the lowest output level that is within the span, and within the operational band under test, and record its output level and frequency.
   5) Affirm that the peak oscillation level measured in 7.11.3f2), does not exceed by 12.0 dB the minimal output level measured in 7.11.3f)4). Record the measurement results of 7.11.3f2) and 7.11.3f4) in tabular format for inclusion in the test report.
   6) The procedure of 7.11.3f1) to 7.11.3.f5) allows the spectrum analyzer trace to stabilize, and verification of shutdown or oscillation level measurement must occur within 300 seconds.[20]

g) Decrease the variable attenuator in 1 dB steps, and repeat step 7.11.3f) for each 1 dB step. Continue testing to the level when the insertion loss for the center of band under test (isolation) between the booster donor port and server port is 5 dB lower than the maximum gain (see 7.3).

h) Repeat 7.11.3a) to 7.11.3g) for all operational uplink and downlink bands.

[20] The time response requirements are provisional and are as determined by the ANSI ASC C63® task group in collaboration and consultation with FCC OET Laboratory Division staff.

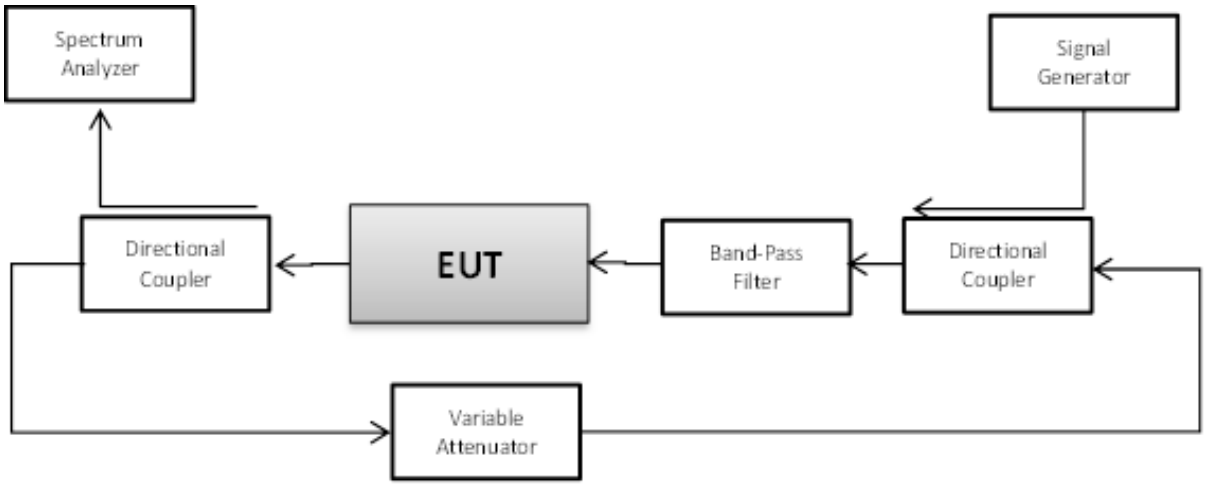

Figure 8 – Oscillation mitigation/shutdown test setup

7.11.4 Alternative test procedure for measuring oscillation mitigation or shutdown

This subclause provides an alternative procedure for measuring oscillation mitigation or shutdown, and may be used in lieu of the procedure provided in 7.11.3. This alternative procedure may be used only if the EUT uplink gain is 4 dB to 9 dB less than the EUT downlink gain for each operational band supported by the booster.

a) Confirm the EUT uplink gain is 4 dB to 9 dB less than the downlink gain for each operational band supported by the booster. Compliance to this requirement must be demonstrated using test procedures in 7.3 and 7.9.1, for the maximum gain and variable gain measurements including results measured in 1 dB steps within the RSSI-dependent region, respectively.

   NOTE—The preceding variable gain requirement uses procedures in 7.9.1 to measure uplink and downlink gain. When measuring downlink variable gain the spectrum analyzer is connected to the EUT server port, which replaces Uplink Signal Generator #2 in Figure 5, for the downlink variable gain measurements.

b) Connect the normal-operating mode EUT to the test equipment as shown in **Figure 9**, using a band-pass filter for the downlink band under test.
c) Spectrum analyzer settings
   1) Set spectrum analyzer #1 to the center frequency of the CMRS downlink band under test, and use the following settings:
      i) RBW=1 MHz, VBW ≥ 3 × RBW,
      ii) power averaging (rms) detector,
      iii) trace averages ≥ 100,
      iv) span ≥ 120% of operational band under test,
      v) number of sweep points ≥ 2 × Span/RBW.
   2) Set spectrum analyzer #2 to the center frequency of the CMRS uplink band under test, and use the following settings:
      i) RBW=1 MHz, VBW ≥ 3 × RBW,
      ii) rms detector,
      iii) trace averages ≥ 100,
      iv) span ≥ 120% of operational band under test,
      v) number of sweep points ≥ 2 × Span/RBW.

d) Configure signal generator for AWGN operation with a 99% OBW of 4.1 MHz, tuned to the frequency 2.5 MHz above the lower edge or below the upper edge of the CMRS downlink band under test. Adjust the RF output level of the signal generator such that the measured power level of the AWGN signal at the output port of the booster is 30 dB less than the maximum power of the booster for the downlink band under test. Confirm that the input signal is not obstructing the measurement of the maximum noise power level in the downlink band under test.

NOTE—Boosters with operating spectrum passbands of 10 MHz or less may use a CW signal source at the band edge instead of AWGN.

e) Set the variable attenuator to a high attenuation setting such that the booster will operate at maximum gain when powered on. Reset the the EUT (e.g., cycle ac/dc power). Allow the EUT to complete its boot-up process, to reach full operational gain, and to stabilize its operation.

f) Set the variable attenuator such that the total insertion loss (i.e., the total feedback loop loss introduced by the variable attenuator and all associated cables, connectors, etc.) at the center of the downlink band under test is 5 dB greater than the booster maximum downlink gain, as recorded in the maximum gain test procedure (see 7.3), for the downlink band under test. Reset the EUT (e.g., cycle ac/dc power).

g) Verify the EUT shuts down on the downlink and uplink bands under test on spectrum analyzer #1 and spectrum analyzer #2, respectively. Measure the maximum downlink and uplink transmitter noise power level on spectrum analyzer #1 and spectrum analyzer #2, respectively and verify the EUT meets the transmit power off mode noise power limits for downlink and uplink bands. Save the spectrum analyzer traces for inclusion in the report. The EUT must meet the transmit power off mode noise power limits for both the downlink and uplink bands, to comply with the oscillation shutdown requirement.
The EUT may use a test mode that is capable of disabling the uplink inactivity function, or the test operator must verify the uplink measurements are not impacted by uplink inactivity function.

h) Repeat 7.11.4a) to 7.11.4g) for all operational bands.

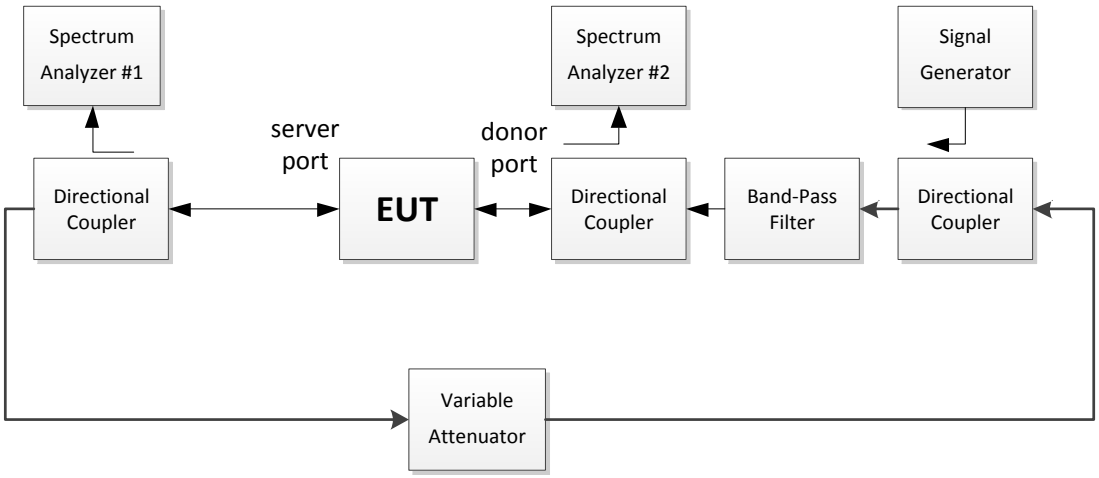

Figure 9 – Alternative oscillation mitigation/shutdown test setup

7.12 Radiated spurious emissions test procedure

Rule paragraph(s): Section 2.1053 *Measurements required: Field strength of spurious radiation.*

This procedure is intended to satisfy the requirements specified in Section 2.1053. The applicable limits are those specified for mobile station emissions in the rule part appropriate to the band of operation (see Appendix A).

Separate compliance requirements are applicable for any digital device circuitry that controls additional functions or capabilities and that is not used only to enable operation of the transmitter in a booster device [i.e., Section 15.3(k) digital device definition]. Separate compliance requirements are applicable for any receiver components/functions that tune within 30 MHz to 960 MHz contained in booster devices [Section 15.101(b)].

a) Place the EUT on an OATS or semi-anechoic chamber turntable 3 m from the receiving antenna.[21]
b) Connect the EUT to the test equipment as shown in **Figure 10** beginning with the uplink output (donor) port.
c) Set the signal generator to produce a CW signal with the frequency set to the center of the operational band under test, and the power level set at P_{IN} as determined from measurement results per 7.2.
d) Measure the radiated spurious emissions from the EUT from the lowest to the highest frequencies as specified in Section 2.1057. Maximize the radiated emissions by using the procedures described in ANSI C63.26.
e) Capture the peak emissions plots using a peak detector with Max-Hold for inclusion in the test report. Tabular data is acceptable in lieu of spectrum analyzer plots.
f) Repeat 7.12c) through 7.12e) for all uplink and downlink operational bands.

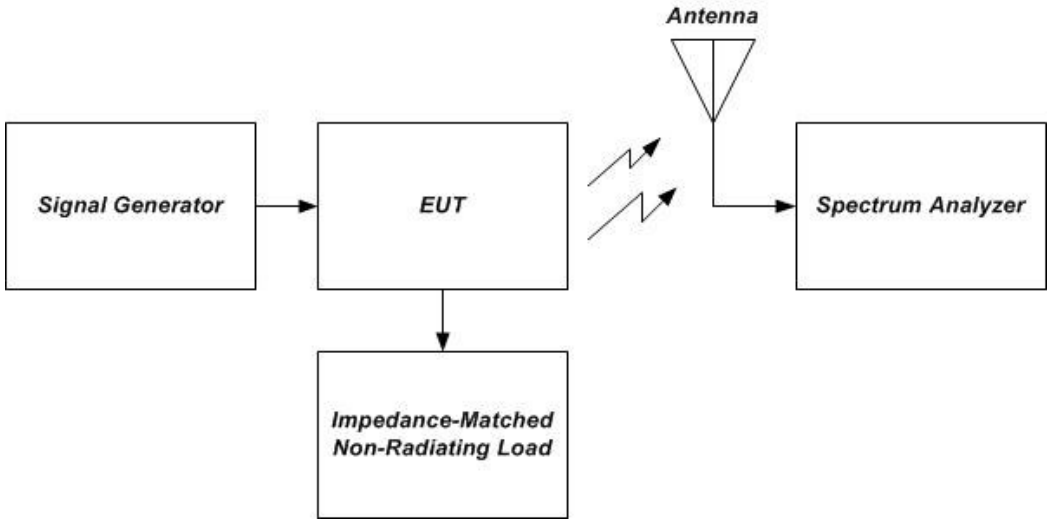

Figure 10 – Radiated spurious emissions test and instrumentation setup

[21] Radiated emissions tests shall performed in accordance with the procedure in ANSI C63.26-2015. See for example 5.6 of KDB Publication 971168 D01 about conversion of field strength to ERP and EIRP, or KDB Publication 412172.

7.13 Spectrum block filtering test procedure

Rule paragraph(s): Section 20.21(e)(8)(i)(B); Section 20.21(e)(3).

The following procedures shall be used for wideband consumer boosters using spectrum block filtering.[22]

a) For all frequency ranges within the filtered spectrum blocks within the CMRS band under test, verify the uplink filter attenuation is not less than the downlink filter attenuation, for all paired frequency bands, as follows.

b)
   1) Use procedures in 7.1 for this comparison, with the trace data measurement points normalized for the uplink and downlink frequency bands.[23]
   2) If there are non-compliant measurement points for specific frequencies, use the procedures in 7.13b) (uplink transmitted noise power) and 7.13c) (uplink gain) for determining compliance.

c) For any non-compliant frequencies within filtered spectrum blocks within the CMRS band under test found per 7.13a), verify the uplink transmitted noise power level within the filtered spectrum blocks does not exceed the applicable limits, as follows.
   1) Use the procedures in 7.7.1h) to 7.7.1m) to measure the uplink noise power level within each 5 MHz of paired spectrum that are within the filtered spectrum.
   2) Set the signal generator and spectrum analyzer to the center of each 5 MHz of paired spectrum within the filtered spectrum.
   3) Repeat test for all 5 MHz of paired spectrum within the filtered spectrum.[24]

   NOTE 1–For boosters with filtered spectrum blocks less than 5 MHz wide, use the signal generator with a narrower AWGN signal bandwidth (e.g., with a 99% OBW of 1.25 MHz or 200 kHz) that does not extend outside the filtered spectrum block under test.
   NOTE 2–Boosters with uplink maximum noise power levels, as measured in 7.7.1b) to 7.7.1f), that do not exceed the uplink noise power limit specified for Transmitter Power Off Mode, will satisfy the requirements of 7.13b).

---

[22] Spectrum block filtering for a wideband consumer booster is defined as providing filtering, rejection, or attenuation to one or more spectrum blocks within a CMRS band (e.g., a consumer booster supporting the Cellular A band, with filtering that attenuates or blocks the Cellular B band spectrum).

[23] Normalize the uplink and downlink measurements such that the filter attenuation for the paired uplink and downlink frequency bands can be compared. Compare the trace measurement points for the paired frequency bands (i.e., referenced to the frequency offset from the lower band edges for the uplink and downlink paired frequency bands). The uplink and downlink filter attenuation is referenced to maximum gain for the respective uplink and downlink bands (i.e., the attenuation at a specific frequency is equal to the maximum gain in the CMRS band under test, minus the gain at the specific frequency).

[24] For example, a wideband consumer booster with spectrum block filtering for the AWS-1 F Block showing non-compliance in 7.13a) on frequencies within the 10 MHz AWS-1 F block, shall test with a 4.1 MHz 99% OBW AWGN signal centered on 2147.5 MHz, and subsequently on 2152.5 MHz [i.e., test each 5 MHz of filtered spectrum that is non-compliant with 7.13a)]. In each test, measure and verify the uplink noise power level (in dBm per MHz) within the 5 MHz of spectrum under test does not exceed authorized limits.

d) For any non-compliant frequencies within filtered spectrum blocks within the CMRS band under test found per 7.13a), verify the uplink gain within the filtered spectrum blocks does not exceed the applicable limits, as follows.
   1) Use procedures in 7.9.1a) to 7.9.1k) to measure the uplink gain within the filtered spectrum blocks, using signal generator #1 and signal generator #2 set to the center of each 5 MHz of paired spectrum within the filtered spectrum blocks.
   2) Repeat test for all 5 MHz of paired spectrum within the filtered spectrum blocks.

   NOTE 3–For boosters with filtered spectrum blocks less than 5 MHz wide, use both signal generators with narrower AWGN signal bandwidths (e.g., with a 99% OBW of 1.25 MHz or 200 kHz) that does not extend outside the filtered spectrum block under test.
   NOTE 4–Boosters with MSCL greater than or equal to 40 dB for the CMRS band under test are excluded from the requirements of 7.13c).

7.14 Additional requirements for dual-enclosure wideband consumer signal boosters

7.14.1 General

a) For dual-enclosure wideband consumer signal boosters supporting interchangeable RF cables between the enclosures, the following tests shall be additionally and separately evaluated using three cable lengths: shortest (minimum loss), medium, and longest (maximum loss) cable lengths that are approved and authorized for use by the manufacturer.

   1) 7.2 Maximum power measurement test procedure
   2) 7.3 Maximum booster gain calculation
   3) 7.4 Intermodulation-product test procedure
   4) 7.5 Out-of-band emissions test procedure
   5) 7.7 Noise limits test procedure
   6) 7.8 Uplink inactivity test procedure
   7) 7.9 Variable booster gain test procedure
   8) 7.11 Oscillation testing procedures
   9) 7.12 Radiated spurious emissions test procedure

b) The actual cable lengths (shortest, medium, longest) to be used with the dual-enclosure wideband consumer booster shall be used for the measurements listed in 7.14.1a).

c) Except for 7.12 (Radiated spurious emissions), as an alternative, the tests listed in 7.14.1a) can be performed with a short cable and a step attenuator, where the attenuation plus cable loss of the short cable is set to simulate the equivalent cable loss as pre-measured for the shortest, medium, and longest grantee-authorized cable lengths.

d) The following tests can be performed using only the shortest grantee-authorized cable.

   1) 7.1 Authorized frequency band verification test
   2) 7.6 Conducted spurious emissions test procedure
   3) 7.10 Occupied bandwidth test procedure

7.14.2 Verification of self-monitoring

a) Use a minimum-loss RF test cable connected to the two-enclosure booster system and a continuously-variable attenuator in-line simulating a connected cable with the increased losses/length (i.e., close to the booster system maximum allowed attenuation condition). Allow the booster system to calibrate this cable loss.
b) After the booster system performs its cable calibration and both units are fully operational, adjust the continuously-variable attenuator, reducing the attenuation between the two enclosures to simulate a short/low-loss grantee-authorized cable connection between the two units (i.e., close to the booster system maximum allowed attenuation condition; i.e., within 2 dB of the lowest grantee-authorized cable loss).
c) Verify the booster sytem either:
   1) shuts down operation within 300 seconds (5 minutes), or
   2) if operational, perform additional Power, Noise, and Gain Limits testing on the booster system for each band the booster functions during this mode of operation.
d) Repeat steps 7.14.2a) through 7.14.2c). In 7.14.2b), further reduce the attenuation between the booster units to simulate a shorter/lower-loss, non-grantee-authorized cable connection between the two units (i.e., 1 dB to 2 dB lower loss than the lowest grantee-authorized cable loss).
e) Repeat steps 7.14.2a) through 7.14.2c). In 7.14.2b), increase the attenuation between the booster units to simulate a longer/higher-loss, non-grantee-authorized cable connection between the two units (i.e., 1 dB to 2 dB higher loss than the highest grantee-authorized cable loss).
f) If the booster system does not operate with an in-line continuously-variable attenuator, then five rather than three cables shall be provided by the manufacturer (grantee) for testing, including the shortest, medium, and longest grantee-authorized cables, and two additional cables outside this range. For the additional cables, one cable shall be no greater than 10 % longer than the longest grantee authorized cable length, and the other cable shall be no less than 10 % shorter than the shortest grantee-authorized cable length. Testing must verify that the booster system with the non-grantee-authorized short/long cables either:
   1) shuts down operation within 300 seconds (5 minutes), or
   2) if operational, perform additional Power, Noise, and Gain Limits testing on the booster units in each band the booster is operational during this mode of operation.
g) For booster units with phantom power (i.e., electrical power injected over the RF cable), testing may be performed using the procedure of 7.14.2a) through 7.14.2h) (using the cable and in-line attenuator), or using an external power source if the procedure 7.14.2a) through 7.14.2h) prevents proper operation of the booster system.

NOTE –Shutdown operation must meet the limits as defined in Part 20 for Transmit power-off mode.

7.14.3 Verification of two-enclosure booster system operation

a) Power up a standalone server unit without a donor unit, measure the noise and gain, and verify that the server unit shuts down after powering up.
b) Power up a standalone donor unit without a server unit, measure the noise and gain, and verify that the donor unit shuts down after powering up.
c) Using the lowest-loss cable (shortest length), connect a paired donor-server system, and confirm the pair is in operating condition.
d) Using the shortest cable, add a server unit to the server end of the paired donor-server system (see **Figure 11**), measure the noise and gain, and verify that the paired system shuts down after powering up.
e) Using the shortest cable, add a donor unit to the donor end of the paired donor-server system (see **Figure 12**), measure the noise and gain, and verify that the paired system shuts down after powering up.
f) Describe the set-up and results in the test report.

NOTE –Shutdown operation must meet the limits as defined in Part 20 for Transmit power-off mode.

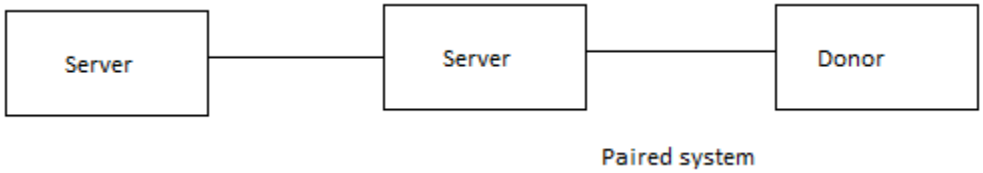

Figure 11 – Paired donor-server two-enclosure booster system with additional server unit connected [see 7.14.3d)]

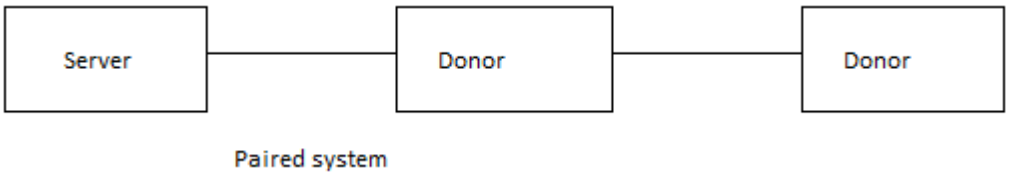

Figure 12 – Paired donor-server two-enclosure booster system with additional donor unit connected [see 7.14.3e)]

APPENDIX A
CONSUMER SIGNAL BOOSTER AUTHORIZED FREQUENCY BANDS PER SECTION 20.21(e)(3)†

FCC Band Name	Uplink Band (MHz): UE transmit; BS receive	Downlink Band (MHz): BS transmit; UE receive	Channel Block Assignments	Applicable FCC Rule Part(s)
Broadband PCS	1850-1915	1930-1995	**A Block:** 1850-1865 MHz (UL) paired with 1930-1945 MHz (DL); **B Block:** 1870-1885 MHz (UL) paired with 1950-1965 MHz (DL); **C Block:** 1895-1910 MHz (UL) paired with 1975-1990 MHz (DL); **D Block:** 1865-1870 MHz (UL) paired with 1945-1950 MHz (DL); **E Block:** 1885-1890 MHz (UL) paired with 1965-1970 MHz (DL); **F Block:** 1890-1895 MHz (UL) paired with 1970-1975 MHz (DL); **G Block:** 1910-1915 MHz (UL) paired with 1990-1995 MHz (DL)	24E: § 24.229, § 24.232, § 24.238
AWS-1	1710-1755	2110-2155	**A Block:** 1710-1720 MHz (UL) paired with 2110-2120 MHz (DL); **B Block:** 1720-1730 MHz (UL) paired with 2120-2130 MHz (DL); **C Block:** 1730-1735 MHz (UL) paired with 2130-2135 MHz (DL); **D Block:** 1735-1740 MHz (UL) paired with 2135-2140 MHz (DL); **E Block:** 1740-1745 MHz (UL) paired with 2140-2145 MHz (DL); **F Block:** 1745-1755 MHz (UL) paired with 2145-2155 MHz (DL)	27: § 27.5(h), § 27.50(d), § 27.53(h)
ESMR††	817-824	862-869	N/A	90: § 90.614, § 90.635, § 90.691
Cellular	824-849	869-894	**A Block:** 824-835 MHz (UL) paired with 869-880 MHz (DL), and 845-846.5 MHz (UL) paired with 890-891.5 MHz (DL) **B Block:** 835-845 MHz (UL) paired with 880-890 MHz (DL), and 846.5-849 MHz (UL) paired with 891.5-894 MHz (DL)	22H: § 22.905, § 22.913, § 22.917
Lower 700 MHz	698-716	716-746	**A Block:** 698-704 MHz (UL) paired with 728-734 (DL); **B Block:** 704-710 MHz (UL) paired with 734-740 MHz (DL); **C Block:** 710-716 MHz (UL) paired with 740-746 MHz (DL); **D Block:** 716-722 MHz, unpaired **E Block:** 722-728 MHz, unpaired	27: § 27.5(c), § 27.50(c), § 27.53(g)
Upper 700 MHz	776-787	746-757	**C Block:** 776-787 MHz (UL) paired with 746-757 MHz (DL)	27: § 27.5(b), § 27.50(b), § 27.53(c) & § 27.53(f)

† UE = user equipment; BS = base station; UL = uplink; DL = downlink
†† Consumer signal boosters for operation on Part 90 (Specialized Mobile Radio) frequencies will not be certificated until the Commission releases a Public Notice announcing the date consumer signal boosters may be used in the band.

APPENDIX B
GUIDELINES FOR DETERMINING THE MOBILE STATION COUPLING LOSS (MSCL)

The following guidelines should be used for determining the mobile station coupling loss (MSCL) factor for consumer signal booster equipment applying for certification under the FCC network protection standard (NPS) presented in the Part 20 rules.

B1. MSCL definition

Mobile Station Coupling Loss (MSCL) is the minimum coupling loss (in dB) between the wireless device and the input (server) port of the Consumer Booster.[25] MSCL must be calculated or measured for each band of operation and provided in compliance test reports.[26] MSCL includes the path loss from the wireless device, and the booster's server antenna gain and cable loss. The wireless device is assumed to be an isotropic (0 dBi) antenna reference. Minimum separation distances assumed between indoor consumer wireless devices and the signal booster's server antenna must be reasonable and must be specified by the manufacturer in customer provided installation manuals.

The MSCL is specified as a positive loss value for use with appropriate limits in the NPS (i.e., in gain limits formula).

B2. MSCL requirements

Compliance test reports must provide the calculation or measurement for each antenna type (includes booster server antenna, cabling and coupling devices) authorized by the manufacturer for use with the consumer booster submitted for certification, and MSCL must be provided for each uplink frequency band supported by the consumer booster.

Compliance must be shown to the applicable limits (i.e., gain limits) using the *lowest* MSCL value from the list of authorized antennas. Compliance must also be demonstrated to the booster antenna kitting requirements provided in Section 20.21(e)(8)(i)(G).

B3. MSCL calculations and measurements

Calculations should use the basic free-space propagation path loss equation with an appropriate minimum separation distance (i.e., 1 m to 2 m depending on the antenna type)[27] between the mobile device and booster server antenna for each uplink frequency band supported by the booster. The free space path loss can be calculated[28] as follows:

$$L_P = 20\log f + 20\log d - 27.5$$

where:

L_P = basic free space path loss,
f = frequency in MHz,
d = separation distance in meters.

---

[25] § 20.21(e)(8)(i)(C)(*1*)(*ii*).

[26] *Id*.

[27] For more information on appropriate separation distances see B5.

[28] See for example KDB Publication 412172.

Measurements to determine free space propagation path loss and server antenna gain should be made on an OATS or anechoic chamber. For MSCL measurements and calculations, the mobile device must be referenced to a 0 dBi antenna gain. The results from tests using other low gain antennas (i.e., half-wave dipole with a gain of 2.1 dBi) must be adjusted accordingly, such that the results reference MSCL with a 0 dBi mobile antenna gain reference. Justification must be provided for any and all assumptions made in either calculating or measuring the MSCL value used.

MSCL measurements performed on fixed indoor boosters should include various mobile station antenna orientations (i.e., vertical, horizontal, slant 45 degrees) at appropriate heights above the floor (i.e., 3 feet to 5 feet depending on the antenna type) to determine the minimum coupling loss to the booster's server antenna.

Measurements for mobile cradle type boosters should include various mobile station antenna locations within the cradle to determine the minimum coupling loss to the booster's server antenna. The placement of actual radiating antennas within CMRS mobiles varies, so various locations within the cradle (which is designed for minimum coupling loss) should be measured.

B4. CMRS mobile device antenna gain (0 dBi)

CMRS device antenna gain is assumed to be 0 dBi per industry standards. This is the assumed antenna gain for the mobile device for reference with the MSCL calculation.

B5. Minimum separation distances for MSCL calculation or measurements

Minimum separation distances from inside wireless devices to the booster's server antenna must be reasonable and specified by the manufacturer in customer provided installation manuals. The minimum separation distance will depend on the particular server antenna type used for fixed indoor, or mobile with inside antenna, consumer booster applications. For example, the following antenna types and minimum separation distances are considered for fixed indoor server antenna types:

a) **Ceiling mounted (e.g., dome-type) antennas**: These antennas are mounted at the ceiling (i.e., ~2.4 m high) and typically have lower gain directly below the antenna, with minimum coupling loss (higher gain) at elevation angles at a distance from the antenna (i.e., up to 2 m distant). Thus, the minimum separation distance for this antenna type can be up to 2 m horizontally removed from the antenna (i.e., not directly below the antenna).

b) **Wall mounted (i.e., panel or other type) antennas:** These antennas are mounted on the wall (i.e., 1.2 m to 1.8 m high) and typically have the highest gain (lowest coupling loss) at a close distance relative to the antenna. For this type of antenna, a reasonable minimum separation distance is up to 1 m horizontally removed from the antenna.

Alternatively, if a manufacturer clearly specifies a minimum separation distance to consumer devices in the installation manual or other user documentation provided with the booster, a reasonable minimum separation distance could be up to 2 m horizontally removed from the antenna. In this case, the user would be required to ensure this minimum separation distance for all CMRS devices authorized for use with this booster.

c) **Table top antennas:** These antennas are intended to be placed or mounted on top of a table (i.e., 0.6 m to 0.9 m high) and will typically have the highest gain (lowest coupling loss) at separation distances close to the antenna. For this type of antenna, a reasonable minimum separation distance is up to 1 m horizontally from the antenna.

Due to the sizes of typical tables in residences and reasonable separation distances from CMRS user devices to the booster server antennas on these tables, i.e., from CMRS devices such as a USB modem, personal-router/hotspot, or other mobile wireless device(s) sitting on the table adjacent to such antennas, an assumed minimum separation distance for determining MSCL shall not exceed 1 m.

In addition, the manufacturer must clearly specify this minimum separation distance to consumer devices in installation manuals or other user documentation provided with the booster. The user will be required to maintain this separation distance for all CMRS devices authorized for use with this booster.

MSCL measurement results submitted with the application for certification must be reasonable, and shall be equivalent or comparable to calculations assuming unobstructed free-space propagation path losses using appropriate server antenna gains and cable losses as authorized by the manufacturer and provided for use with the booster. Compliance test reports must use the lowest MSCL value associated with all antennas authorized for use by the manufacturer for the consumer signal booster.

For inside antennas that are used in mobile booster applications, the minimum separation distance must be specified by the manufacturer and must be reasonable when considering the location and placement of CMRS devices held by users in the vehicle (at the hand or head of the user), or placed in typical locations (i.e., cup holders) within the vehicle.

APPENDIX C
TERMS, DEFINITIONS, AND ACRONYMS

1) **Additive white gaussian noise (AWGN):** The statistically random radio noise having a frequency spectrum that is continuous and uniform over a specified frequency band. White noise has equal power per hertz over the specified frequency band.

2) **Automatic gain control (AGC):** A circuit that automatically controls the gain of a signal by applying more gain to weaker received signals and less (or no) gain to stronger received signals.

3) **Code division multiple access (CDMA):** A method for transmitting multiple digital signals simultaneously over the same carrier frequency or channel.

4) **Commercial Mobile Radio Service (CMRS)**: A mobile service that is: (1) provided for profit, i.e., with the intent of receiving compensation or monetary gain; (2) an interconnected service; and (3) available to the public, or to such classes of eligible users as to be effectively available to a substantial portion of the public; or the functional equivalent of such a mobile service described above.

5) **Consumer signal booster:** a bidirectional signal booster that is marketed and sold for use without modification, installed without third-party assistance and operated only with approved antennas, cables, and/or coupling devices as specified by the booster manufacturer.

6) **Continuous wave (CW):** An electromagnetic wave of constant amplitude and frequency; and in mathematical analysis, of infinite duration. Can also refer to a data modulation scheme in which the data is represented by a carrier signal being switched on and off.

7) **Continuously-variable attenuator:** A continuously-variable attenuator is a device that provides an uninterrupted RF signal between attenuation states.

8) **Dual-enclosure wideband consumer signal booster (system):** Two enclosure units connected by a coaxial cable, with one enclosure designated as the donor unit and the other as the server unit. The donor unit and server unit communicate with an RF signal separate from the CMRS signal and with paired master/slave operation.

9) **Equipment under test (EUT):** A device or system being evaluated for compliance that is representative of a product to be marketed.

10) **Equivalent isotropic radiated power (EIRP):** The sum of the power supplied to the antenna (in dBm) and the antenna gain (in dBi) in a given direction relative to an isotropic antenna.

11) **Fixed consumer signal booster:** A consumer signal booster designed to be operated in a fixed location in a building.

12) **Global System for Mobile Communication (GSM):** A standard developed by the European Telecommunications Standards Institute (ETSI) to describe protocols for second generation (2G) digital cellular networks used by mobile phones.

13) **Long Term Evolution (LTE):** A standard for wireless communication of high-speed data for mobile phones and data terminals.

14) **Mobile consumer signal booster:** A consumer signal booster designed to operate in a moving vehicle where both uplink and downlink transmitting antennas are at least 20 cm from the user or any other person.

15) **Mobile station coupling loss (MSCL):** the minimum coupling loss (in dB) between the wireless device and the input (server) port of the consumer booster. MSCL must be calculated or measured for each band of operation and provided in compliance test reports. MSCL includes the path loss from the wireless device, and the booster's server antenna gain and cable loss. The wireless device is assumed to be an isotropic (0 dBi) antenna reference. Minimum standoff distances from inside wireless devices to the booster's server antenna must be reasonable and specified by the manufacturer in customer provided installation manuals.

16) **Network protection standard (NPS)**: specifies new technical, operational, and registration requirements applicable to consumer signal boosters to minimize the potential for interference to wireless networks.

17) **Occupied bandwidth (OBW):** the occupied bandwidth is the frequency bandwidth such that, below its lower and above its upper frequency limits, the mean power levels are each equal to 0.5% of the total mean power contained within the fundamental emission (also known as the 99% bandwidth).

18) **Open area test site (OATS):** An open, flat, level area where the ground is covered with conductive material and that is clear of overhead wires and reflecting structures.

19) **Out-of-band emission (OOBE):** An emission on a frequency or frequencies immediately outside the necessary bandwidth which results from the modulation process, but excluding spurious emissions.

20) **Provider-specific consumer signal booster:** A consumer signal booster that may only operate on the frequencies and in the market areas of the specified licensee(s). Provider-specific consumer signal boosters may only be certificated and operated with the consent of the licensee(s) whose frequencies are being amplified by the device.

21) Pseudorandom binary Sequence (PRBS): A fixed-length, mathematically-randomized sequence of bits that satisfies many of the criteria for a true random sequence and thus is frequently used in digital functionality testing.

22) **Received signal strength indication (RSSI) for wideband consumer boosters:** The downlink composite received signal power in dBm, referenced to the consumer booster's donor antenna port, for all CMRS base stations' signals received within the band of operation. This parameter is applicable to noise limits in Section 20.21(e)(8)(i)(A)(*1*) and gain limits in Section 20.21(e)(8)(i)(C)(*1*).

23) **Received signal strength indication (RSSI) dependent region:** The region within applicable noise and gain limits where the permitted noise and gain varies with and is dependent on the downlink RSSI parameter. For example, see RSSI dependent limit (blue line segment) in the figures provided in Appendix D, which is between the maximum permitted levels (e.g., frequency dependent limits) and the transmit power off mode limit.

24) **Signal booster:** A device that automatically receives, amplifies, and retransmits on a bidirectional or unidirectional basis, the signals received from base, fixed, mobile, or portable stations, with no change in frequency or authorized bandwidth.

25) **Spectrum block filtering:** for a wideband consumer booster, spectrum block filtering is defined as providing filtering, rejection, or attenuation to one or more spectrum blocks within a CMRS band

(e.g., a consumer booster supporting the Cellular A band, with filtering that attenuates or blocks the Cellular B band spectrum).

26) **Spurious emission:** An emission on a frequency or frequencies which are outside the necessary bandwidth and the level of which may be reduced without affecting the corresponding transmission of information. Spurious emissions include harmonic emissions, parasitic emissions, intermodulation products and frequency conversion products, but exclude out-of-band emissions.

27) **Transmitted noise power level:** The noise power level measured at the signal booster output that is represented by the sum of the thermal noise power, the booster noise figure and the booster gain, and expressed in dBm within a 1 MHz bandwidth (dBm/MHz).

28) **Wideband code division multiple access (W-CDMA):** An air interface standard found in 3G mobile telecommunications networks.

29) **Wideband consumer signal booster:** A consumer signal booster that may operate on the frequencies and in the market areas of multiple licensees.

APPENDIX D
WIDEBAND CONSUMER BOOSTER NOISE AND GAIN LIMITS CHARTS

These charts illustrate the wideband consumer booster noise, gain and transmit power off mode limits pursuant to Sections 20.21(e)(8)(i)(A), 20.21(e)(8)(i)(C), and 20.21(e)(8)(i)(H), respectively. The noise limits chart show the consumer booster transmitted noise power limits at various RSSI levels, and gain limits charts show the fixed and mobile consumer booster gain limits at various RSSI levels for sample MSCL values.

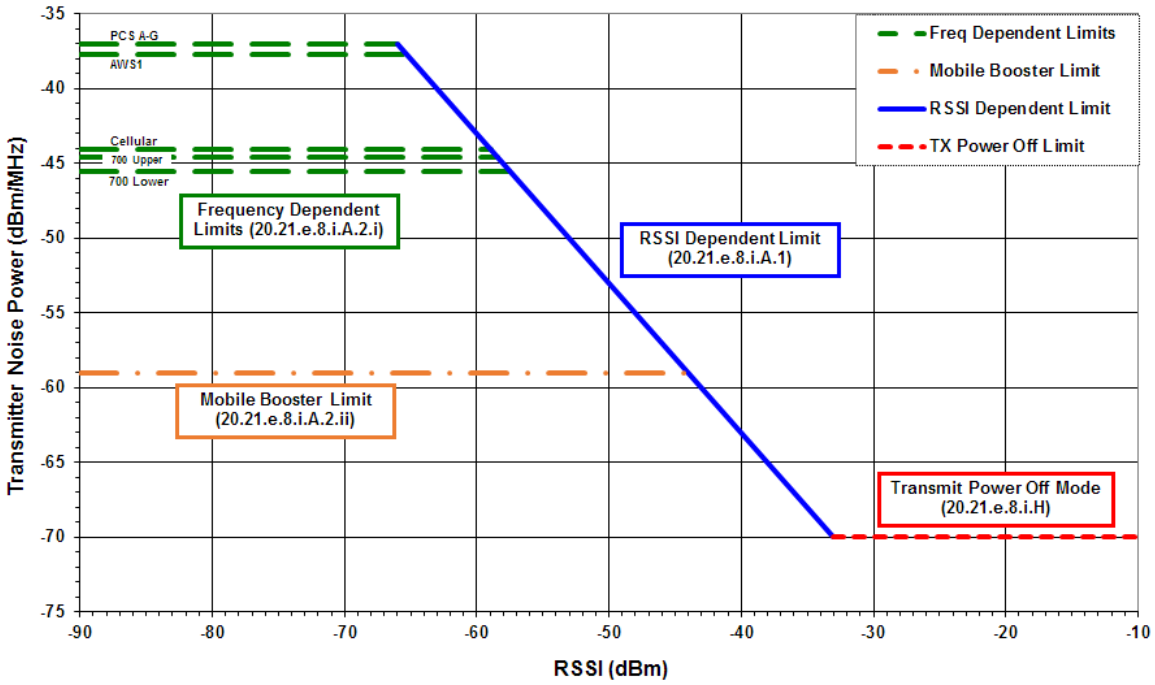

Figure D1 – Wideband consumer signal booster variable noise limits

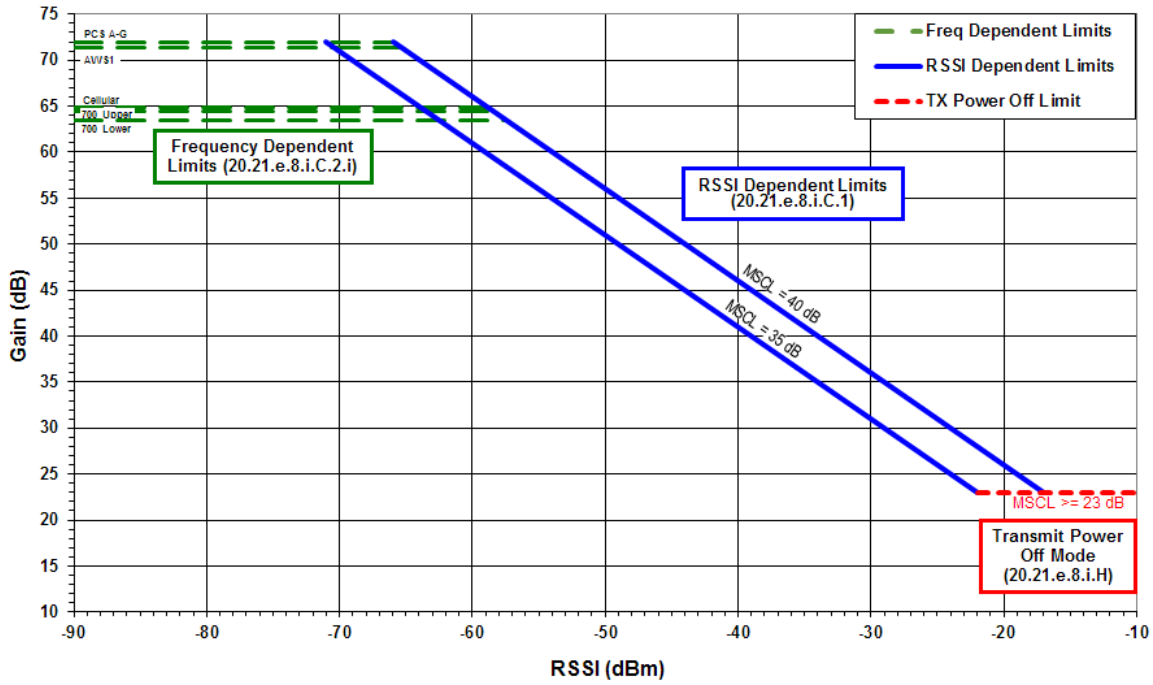

Figure D2 – Fixed wideband consumer signal booster variable gain limits

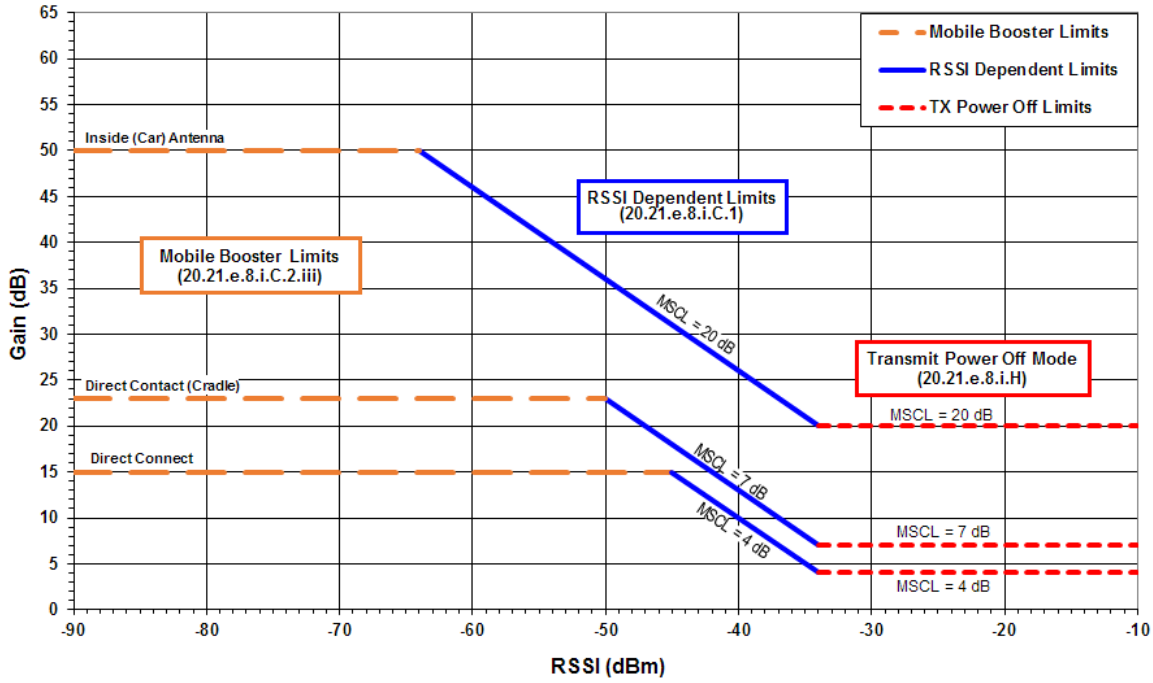

Figure D3 – Mobile wideband consumer signal booster variable gain limits

APPENDIX E
NETWORK PROTECTION STANDARD (NPS) – SUMMARY OF RULE PARAGRAPHS, MEASUREMENT QUANTITIES, AND REQUIREMENTS

The following table includes blue font strikethrough (deleted) and underline (new) text applicable since the Dec. 29, 2014 effective date listed in the Federal Register for rules established under FCC-14-138 (79 FR 70790-70796). This summary table is for information and quick reference purposes only; applicants and laboratories must use the most recent complete version of Section 20.21(e)(8) for compliance testing purposes.

§ 20.21(e)(8) ***Wideband Consumer Signal Boosters.***
§ 20.21(e)(8)(i) *Technical Requirements*
§ 20.21(e)(8)(i)(A) *Noise Limits.*
§ 20.21(e)(8)(i)(A)(*1*) UL ~~and DL~~ ports transmitted noise power [dBm/MHz]: $P_{TN} \leq -(103+RSSI)$.
RSSI is DL composite received signal power P_{RS} [dBm] at donor port for all operating-band BS.
§ 20.21(e)(8)(i)(A)(*2*) UL and DL ports maximum transmitted noise power [dBm/MHz]:
§ 20.21(e)(8)(i)(A)(*2*)(*i*) Fixed booster: $P_{TN,max} \leq (-102.5+20\lg f_{MHz})$. f_{MHz} is UL midband frequency.
§ 20.21(e)(8)(i)(A)(*2*)(*ii*) Mobile booster: $P_{TN,max} \leq -59$.
§ 20.21(e)(8)(i)(A)(*2*)(*iii*): Instrumentation, etc. (see rule).
§ 20.21(e)(8)(i)(B) *Bidirectional Capability.* UL and DL gain shall be equivalent; UL $P_{cond} \geq 0.05$ W; One-way boosters prohibited; Block filtering (see rule).
§ 20.21(e)(8)(i)(C) *Booster Gain Limits.*
§ 20.21(e)(8)(i)(C)(*1*) UL "variable gain" $G_{UL} \leq (-34-RSSI-MSCL)$ [dB]
§ 20.21(e)(8)(i)(C)(*1*)(*i*): RSSI is DL composite received signal power P_{RS} [dBm] at donor port for all operating-band BS.
§ 20.21(e)(8)(i)(C)(*1*)(*ii*): MSCL definition (see rule).
§ 20.21(e)(8)(i)(C)(*2*) UL and DL maximum gain [dB]
§ 20.21(e)(8)(i)(C)(*2*)(*i*) Fixed Booster: $G_{UL,max}$, $G_{DL,max} \leq 6.5+20\lg f_{MHz}$
§ 20.21(e)(8)(i)(C)(*2*)(*ii*) f_{MHz} is UL midband frequency.

§ 20.21(e)(8) ***Wideband Consumer Signal Boosters.***
§ 20.21(e)(8)(i)(C)(*2*)(*iii*) Mobile Booster: $G_{UL,max}$, $G_{DL,max}$ ≤ 50 dB, inside antenna; ≤ 23 dB, contact coupling; ≤ 15 dB, direct connect.
§ 20.21(e)(8)(i)(D) *Power Limits.* UL $P_{cond} \leq 1$ W, and UL EIRP ≤ 1 W. DL $P_{cond} \leq 0.05$ W, and DL EIRP ≤ 0.05 W.
§ 20.21(e)(8)(i)(E) *Out of Band Emission Limits.* OOBE ≤ 6 dB below service rule mobile limit; OOBE compliance tested using high PAR signals.
§ 20.21(e)(8)(i)(F) *Intermodulation Limits.* UL and DL IM products ≤ −19 dBm. IM testing per description in rule.
§ 20.21(e)(8)(i)(G) *Booster Antenna Kitting.*
§ 20.21(e)(8)(i)(H) *Transmit Power Off Mode.* Power-off mode required for devices not meeting noise and gain limits [§ 20.21(e)(8)]. The power-off mode for such devices requires: UL and DL $P_{TN} \leq -70$ [dBm/MHz], and G_{UL} and $G_{DL} \leq \min\{23 \text{ dB}; MSCL\}$.
§ 20.21(e)(8)(i)(I) *Uplink Inactivity.* UL $P_{TN} \leq -70$ [dBm/MHz] after 5 min. without active device connection.
§ 20.21(e)(8)(ii) *Interference Safeguards.*
§ 20.21(e)(8)(ii)(A) *Anti-Oscillation.* Detect and mitigate within: 0.3 sec. for UL, 1.0 sec. for DL.
§ 20.21(e)(8)(ii)(B) *Gain Control.*
§ 20.21(e)(8)(ii)(C) *Interference Avoidance for Wireless Subsystems.*

Change Notice

02/12/2016: 935210 D03 Signal Booster Measurements v03 is replaced by 935210 D03 Signal Booster Measurements v04. Changes summary is as follows.

- Updates for consistency where appropriate with the most recent version of test procedures from the ASC C63® Wireless Working Group (September 2015).
- Omitted reference to 20.21(a)(4) at the first row of the table in 1.4. 20.21(a)(4) originally was listed in that row because it basically has the same frequency and rule part requirements as does 20.21(e)(3); the difference being 20.21(a) provisions are for end-use operating conditions, and 20.21(e) provision are for NPS compliance demonstrations in equipment authorizations. Further, the listing of "20.21(a)(4) Self-monitoring" was incorrect; self-monitoring is 20.21(e)(4), and was not intended to explicitly apply for the 7.1 test conditions.
- Omitted reference to 20.21(a)(4) in the first paragraph of 7.1, for the same reasons as described above.
- 5.9 updated to clarify impedance matching requirements.
- 7.4i) added "simultaneously."
- 7.5m change from 7.5j) to 7.5i).
- 7.7.2 added cross-reference to Fig 4.
- 7.7.2c) added cross-reference to 7.7.1m).
- 7.7.2 moved NOTE to 7.7.1.
- 7.7.2 Fig 3 changed "50-ohm Shielded Load" to "Matched Load," and deleted "(see note below)."
- 7.7.2 Fig 4 changed "50-ohm Shielded Load" to "Matched Load."
- 7.9.1 heading changed from "Maximum gain" to "Variable gain."
- 7.9.2 added cross-reference to Fig 5.
- 7.10 clarified repeats sequence in steps h) to m).
- 7.11.2 Fig 7 added NOTE.
- 7.11.3f6) added, per ASC C63® participant input.
- 7.11.4 former g) moved to be a), and renumber others. Text clarified in 7.11.4g) (former f).
- 7.12 added para. on part 15 emissions basic requirements.
- Appendix E portion repeated from 935210 D02, for convenience.

10/27/2017: 935210 D03 Signal Booster Measurements v04 is replaced by 935210 D03 Signal Booster Measurements v04r01. Changes summary is as follows.

- Citations added for FCC 17-93 and ANSI C63.26.
- Miscellaneous format/style editorial changes (change from "§" to "Section," etc.).
- Cross-references to ANSI C63.4 for radiated emission measurements basic guidance are replaced using ANSI C63.26.
- Subclause 7.4g) amended for testing in range of frequency with maximum output.
- Second note added in 7.7.1.
- Note added in 7.8.

06/19/2018: 935210 D03 Signal Booster Measurements v04r01 is replaced by 935210 D03 Signal Booster Measurements v04r02. Changes summary is as follows.

- Updates in 1.1), 2) ¶1, and C5) for removing provider-specific consumer boosters personal-use requirement per Order FCC 18-35.
- Add footnote citation to FCC 14-138.
- Last sentence added in 7.2.2h), 7.4n), 7.5l) per ASC C63® SC-4 Wireless WG input.
- Note 3 added in per 7.5) ASC C63® SC-4 Wireless WG input.
- 7.14), C7), C8) added per ASC C63® SC-4 Wireless WG input; subsequent C) items renumbered accordingly.