Federal Communications Commission
Office of Engineering and Technology
Laboratory Division

June 19, 2018

SIGNAL BOOSTERS BASIC CERTIFICATION REQUIREMENTS

I. INTRODUCTION

In *Report and Order* FCC 13-21 (WT Docket No. 10-4, referred to as "the *Order*"), the Commission outlined equipment authorization and operational requirements for signal boosters that operate under Parts 20, 22, 24, 27 and 90 of the FCC rules.[R3]-[R7][1,2] The *Order* created two classes of signal boosters, Consumer and Industrial, with specific regulatory requirements for each class. Part 90 PLMR signal boosters, a special type of Industrial Boosters, have additional unique requirements. In 2014 and 2015, various consumer booster rules were also updated by an *Order on Reconsideration* (FCC 14-138 [R16]). The *Second Report and Order* FCC 18-35 ([R33], [R34]) modified personal-use conditions for Provider-Specific Consumer Signal Boosters.

This document provides a summary of the rules related to equipment authorization, as well as additional policies and guidance for certification applications. Due to the significant changes from the preceding rules and with the intended new framework, manufacturers, test labs, and TCBs are encouraged to submit KDB inquiries to request clarification and guidance before starting compliance testing or submitting an equipment authorization application where the available policies and test procedures do not readily support review and approval of a specific booster device.

For equipment operation, boosters must also comply with applicable service rules that apply to the bands of operation, in addition to those specified in the *Order*. For equipment authorization, booster test reports must address all applicable requirements in Part 2 and the respective rule parts for the band of operations, in addition to the requirements listed in sections II to V of this document.

Compliance testing uniform procedures are given in KDB Publication 935210 Attachment D03 for Wideband Consumer Signal Boosters, in KDB Publication 935210 Attachment D04 for Provider-Specific Consumer Signal Boosters, and in KDB Publication 935210 Attachment D05 for Industrial Signal Boosters (CMRS and PLMRS) and non-consumer repeater and amplifier devices.

In addition to the KDB publications described in the preceding paragraph, procedures for compliance measurements on industrial and consumer signal boosters operating under Sections 20.21 and 90.219 are also provided in Clause 7 of ANSI C63.26-2015 [R29]. As part of the rule changes adopted by the *First Report and Order* FCC 17-93 (docket no. 15-170) [R30], Sections 2.910(c) and 2.1041 were amended to include ANSI C63.26-2015 as an acceptable measurement procedures standard for equipment that operates in authorized radio services covered by its scope, where compliance measurements are required

[1] Numbers in brackets [Rxx] refer to documents listed in APPENDIX G.

[2] Consistent with as stated in the *Order* (¶ 78), the FCC Wireless Telecommunications Bureau released a Public Notice on February 29, 2016, seeking comments to assess the state of technological advancements and provide a starting point informing on issues for which further rulemaking action may be warranted.

per Sections 2.1046, 2.1047, 2.1049, 2.1051, 2.1053, 2.1055, 2.1057, also 2.911(c).[3] KDB Publications 935210 D03, D04, and D05 served as bases for and were developed concurrently with the ANSI C63.26 measurement procedures, and as such each provides pertinent guidance for performing compliance measurements for signal boosters operating under Sections 20.21 and 90.219.[4] As a companion document for use along with ANSI C63.26-2015 and the other attachments under KDB Publication 935210, KDB Publication 935210 D02 provides rule section numbers and other information about FCC rules, policies, and procedures that is otherwise generally not part of the normative text in documents developed by the Accredited Standards Committee (ASC) C63®—Electromagnetic Compatibility (EMC).

II. GENERAL CERTIFICATION RULES AND POLICIES

The following lists general rules and policies applicable to signal booster device certifications.

(a) All boosters within the scope of the *Order* certified after 2/20/2013 must comply with new rules.

(b) The rules apply for the frequency bands listed in APPENDIX D [see Sections 20.21(a)(4), 20.21(e)(3), 90.219(b)].

(c) The rules established by FCC 13-21 became effective May 13, 2013, except those rules containing new or modified information collection requirements, which were subject to OMB PRA review; the OMB PRA portion was completed and with all rules being effective from September 11, 2013.

(d) [Reserved]

(e) Until all final procedures are published and associated notice is given to TCBs, certification applications are reviewed on a case-by-case basis; in addition, FCC may request device samples to be tested at the FCC Lab.

(f) 800 MHz ESMR Part 90 consumer boosters will be allowed only when the nationwide band reconfiguration is substantially completed; applications are not accepted until further notice [see Section 20.21(a)(4)].

(g) Consumer signal boosters are not allowed for 2.6 GHz Part 27 BRS/EBS band [see *Order* ¶ 41, and Section 20.21(a)(4)]. (See also APPENDIX D about frequency bands.)

(h) Modular approval is not allowed for boosters.[5]

(i) Extended frequency listing (KDB Publication 634817 [R14]) on the grant, or the EF grant note, is not allowed for boosters, rather applications must meet all necessary requirements. If test reports present test data outside the scope of the authorization application, such results must be individually marked "Not applicable for FCC certification."

---

[3] ANSI C63.26-2015 was developed by ANSI-Accredited Standards Committee (ASC) C63® to provide equipment authorization applicants, manufacturers, and test laboratories with uniform, reliable, and consistent measurement procedures necessary to demonstrate that transmitters used in licensed radio services comply with FCC's technical requirements. ASC C63® is a standards development organization that includes participants from the wireless industry, test laboratories, and regulators. At present ASC C63® has an open project for developing various updates of ANSI C63.26; information is available at: (http://www.c63.org/documents/misc/matrix/c63_standards.htm).

[4] Applicants, test labs, and TCBs are requested to submit a KDB inquiry requesting guidance in case unclear or inconsistent provisions are found between ANSI C63.26-2015 and KDB Publication 935210.

[5] Policies, procedures, and rules for modular approval equipment authorizations are described in KDB Publication 996369.[R13]

(j) The operational description exhibit must describe how unauthorized/out-of-scope parameters (frequency bands, power levels, gains, antennas, operation modes, etc.) are selected and how different versions are managed and controlled.

(k) Third-party or field configuration of frequency, power, or other parameters that affect regulatory compliance:

(1) Consumer boosters: not allowed unless under direct control of grantee; the operational description exhibit must describe how control is achieved.

(2) Industrial boosters: allowed within operation bands and other conditions specified during certification; the operational description exhibit must explain what can be modified/configured by any third-party (anyone other than the grantee), the associated procedure, and how control is achieved to prevent installers from accidentally configuring or modifying the device resulting in unauthorized operation.

(l) All boosters, consumer and industrial, must comply with general population RF exposure limits, including labeling for fixed antennas where Section 1.1307(b)(1) requirements apply [see *Order* ¶¶ 125-126, 181].

(m) Test reporting and application contents for all consumer and industrial boosters.

(1) Identify specific rule paragraph(s) relevant for compliance demonstration of each set of test results, and for each test-setup and test-procedure description section of a report.

EXAMPLE: Because Section 20.21(e)(8)(i)(C)(2) has two separate sets of limits [i.e., Section 20.21(e)(8)(i)(C)(2)(i) for Fixed Boosters and Section 20.21(e)(8)(i)(C)(2)(iii) for Mobile Boosters], a test report listing only "20.21(e)(8)(i)(C)(2)" is ambiguous and not appropriate. For this example, the specific applicable limits of Section 20.21(e)(8)(i)(C)(2)(i) or Section 20.21(e)(8)(i)(C)(2)(iii) must be listed for each data set.

(2) With each test results set, provide text explaining where and how the specific numeric, graphic, and/or tabular results demonstrate compliance for the associated rule paragraph(s).

(3) Where a Form 731 application is intended to cover multiple model number versions (e.g., with corresponding multiple separate user manual exhibits in a filing), please include a cover letter exhibit in the filing listing the intended versions and brief description of the differences.

(4) Show and explain compliance explicitly for Sections 90.219(e)(1) to (e)(4) (*Device Specifications*) in test reports for devices subject to Section 90.219. Note that in equipment authorization applications, Section 90.219(d) (*Deployment Rules*) is relevant primarily for installation/operating instructions and operational description exhibits, and generally is not applicable for Section 90.219(e) compliance demonstrations.

(n) System operation – When transmitter requires other devices in a system, select Form 731 "Part of system…" checkbox. List FCC IDs of other components. Test with system components if needed. Usually applies for fiber-optic systems. Control of power level is one implication.

Filings for DAS devices need to clearly describe and show whether test setup is end-to-end (input to host through to output from remote), or which partial paths only relative to the described full transmit paths are tested, etc. (see also related provisions in A.5.3 and B.1 of this document).

(o) Devices supporting MIMO transmissions in end-use booster system configurations.

(1) Based on various application filings since February 2013, some DAS remote unit devices are also optionally intended for operation along with same-band/same-frequency integral or connectable (add-on or expansion) remote unit(s), and along with host unit(s) and transport links that support MIMO streams. See APPENDIX A of this document for an example system diagram.

(2) Equipment authorization applications for such intended operations need to address KDB Publication 662911 multi-port testing [R17], and include associated technical information describing the end-to-end booster system configurations and associated devices.

(3) Filings for remote unit devices capable of MIMO transmissions but without MIMO testing.

(i) If compliance for MIMO operations is not addressed in a filing for a remote unit device that is intended for use as part of an end-use MIMO booster system, the following grant condition should be used:

"This filing has compliance demonstration information and test data only for SISO (single-input single-output) booster system configurations; additional equipment authorization is required to allow this device to be used in MIMO (multiple-input multiple-output) industrial booster systems."

(ii) To permit subsequent end-use MIMO operations, a permissive change filing is appropriate including compliance information for end-use MIMO operations where the device optionally can be used as part of a booster system along with same-band/same-frequency integral or connectable (add-on) remote unit(s), and along with host unit(s) and system transport links that support MIMO streams.

(p) Miscellaneous items for which compliance supporting information may be appropriate [continued from existing booster authorization framework (*Order* ¶¶ 110-116, 185-186), not elsewhere covered in 935210].

(1) Affirm that device cannot operate in saturation. Means to control maximum power and to assure linear operation (use in system configuration may be necessary) should be described, as well as means to prevent saturation or over-modulation prevented for pulsed signal inputs where applicable.

(2) Out-of-band rejection–testing for rejection of out-of-band signals may be appropriate. Alternatively, filter frequency response plots are acceptable.

(3) Report worst case results for occupied bandwidth comparison and intermodulation tests done with and without any AGC circuitry activated, for devices so equipped.

(4) For devices using automatic gain control (AGC) as a means for complying with service rule power limits, provide test results showing maximum output with and without AGC activated. Rated power listed on a grant must not exceed the applicable service rule limit (see, e.g., V) j) 1) including 90.219).

EXAMPLE: Consider a rule output power limit of 1 W EIRP (30 dBm). Compliance testing was done based on AGC designed or set to 32 dBm, and with professional-installation instructions to use an antenna with maximum gain of −2 dBi. The grant should not list the higher maximum power as measured with AGC off (32 dBm), because that would construe non-compliance with the 30 dBm ERP rule limit.

III. CONSUMER SIGNAL BOOSTER SPECIFIC REQUIREMENTS

(a) Consumer Signal Booster Network Protection Standard (NPS) requirements – see summary listing in APPENDIX E, and test procedures in KDB Publication 935210 D03 (Wideband) and KDB Publication 935210 D04 (Provider-Specific).

(b) Warning label requirements:

(1) Example labels [R11][6]

(i) The following label may be used only for mobile consumer signal boosters:

This is a CONSUMER device.

BEFORE USE, you **MUST REGISTER THIS DEVICE** with your wireless provider and have your provider's consent. Most wireless providers consent to the use of signal boosters. Some providers may not consent to the use of this device on their network. If you are unsure, contact your provider.

You **MUST** operate this device with approved antennas and cables as specified by the manufacturer. Antennas **MUST** be installed at least 20 cm (8 inches) from any person.

You **MUST** cease operating this device immediately if requested by the FCC or a licensed wireless service provider.

WARNING. E911 location information may not be provided or may be inaccurate for calls served by using this device.

(ii) The following label shall be used for all fixed consumer signal boosters:

This is a CONSUMER device.

BEFORE USE, you **MUST REGISTER THIS DEVICE** with your wireless provider and have your provider's consent. Most wireless providers consent to the use of signal boosters. Some providers may not consent to the use of this device on their network. If you are unsure, contact your provider.

You **MUST** operate this device with approved antennas and cables as specified by the manufacturer. Antennas **MUST** be installed at least 20 cm (8 inches) from any person.

You **MUST** cease operating this device immediately if requested by the FCC or a licensed wireless service provider.

WARNING. E911 location information may not be provided or may be inaccurate for calls served by using this device.

This device may be operated ONLY in a fixed location for in-building use.

(iii) Example label variation allowed combining FCC information with requirements of ISED Canada RSS-131 [R31] (NOTE—This example shows Track-Changes for convenience only; actual final labels should omit underlines and font color difference):

[6] Required label text was amended per rules established by the Order FCC 14-138 [R16], effective date July 7, 2015.

This is a CONSUMER device.

BEFORE USE, you **MUST REGISTER THIS DEVICE** with your wireless provider and have your provider's consent. Most wireless providers consent to the use of signal boosters. Some providers may not consent to the use of this device on their network. If you are unsure, contact your provider.

In Canada, **BEFORE USE** you must meet all requirements set out in ISED CPC-2-1-05.

You **MUST** operate this device with approved antennas and cables as specified by the manufacturer. Antennas **MUST** be installed at least 20 cm (8 inches) from (i.e., **MUST NOT** be installed within 20 cm of) any person.

You **MUST** cease operating this device immediately if requested by the FCC (or ISED in Canada) or a licensed wireless service provider.

WARNING. E911 location information may not be provided or may be inaccurate for calls served by using this device.

This device may be operated ONLY in a fixed location (i.e., may operate in a fixed location only) for in-building use.

(2) Must include required information on registration, antenna/cable restriction, cease operation, and E911

(3) Can be combined with the FCC ID label

(4) The content and location of the label should be presented in the ID Label exhibit

(5) Permanently affixed to a permanently attached part of the equipment enclosure, and readily visible

(6) Alternative label text and/or layout requires advance FCC approval

(7) Stating that the booster is approved by all providers for use is prohibited on the label or elsewhere

(8) The label may contain acknowledgement that particular providers have given consent to this device; such statement would be inserted before "Some wireless providers may not consent to the use of this device on their network. If you are unsure, contact your provider."

(c) Attestation (must be non-confidential exhibits, signed by the applicant; signature by test lab, agent, or TCB is not acceptable) should include:

(1) Licensee consent for provider-specific booster has been obtained (consent be made available upon FCC/TCB request)

(2) NPS and other compliance/safeguard features have been implemented

(3) NPS and other compliance/safeguard features are defaulted to "ON" configuration (in operation)

(4) NPS and other compliance/safeguard features cannot be field reconfigured, disabled or removed

(5) Consumer booster is not user programmable, does not need fine tuning or adjustment, does not require professional installation

(6) Future software upgrade will not cause non-compliance

(d) User's Manual (non-confidential or short-term confidential) should include:

(1) Warning label message

(2) Warning message for use of unauthorized antennas, cables, and/or coupling devices

(3) Provide a complete list of authorized antennas, cables, and/or coupling devices

(4) List the default antenna, cable, and/or coupling device that are shipped with the booster

(5) Describe installation accessory, procedure, and any required fine tuning or adjustment

(6) Contact information for providers (support for end-user registrations; see also APPENDIX F)

(7) High level summary and/or brief description of safeguard features, such as anti-oscillation, AGC, noise-power limiting circuit compliant with NPS requirement (technical details in operational description, may qualify for confidentiality)

(e) Operational Description (can request confidentiality) should include:

(1) Provide a list of all operation bands

(2) If device is capable of operating outside the current band plan through software configuration, describe how software is managed and controlled

(3) Describe the self-monitoring mechanism (HW and SW)

(4) Describe the anti-oscillation mechanism

(5) Describe the automatic power-down and shut-down mechanism when the booster is not in need

(6) Detection scheme for own network

(7) Detection scheme for other networks, like and unlike

(8) Power down triggering criteria and adjustable range

(9) Shut down triggering criteria and resume/recovery algorithm

(10) Describe how "operate only for the duration of a call" is achieved

(11) Describe any interference avoidance scheme

(f) Fixed Consumer Signal Boosters specific considerations

(1) Section 20.3 specifies that Fixed Consumer Signal Boosters are devices designed to be operated in a fixed location in a building. More specifically the server / coverage / downlink transmit antenna must be operated at a fixed location in a building; the donor-side antenna may optionally be installed outdoors.

(2) The 10 meter height limit of Section 27.50(d)(4) applies for Fixed Consumer Signal Boosters transmitting in 1710-1755 MHz. The 10 meter antenna height limitation can be addressed in install/operate instructions in one of two ways:

(i) Specify that the antenna for the device must be installed to comply with the 10 meter above ground maximum antenna height limitation OR

(ii) Specify that the antenna for the device has a 10 meter above ground maximum antenna height limitation when the device is used with a handset that covers the 1710-1755 MHz band and that owners could be subject to potential FCC enforcement action for noncompliance.

(g) Contact coupling accessories capable of operating with handsets or modems in Section 2.1093 portable device RF exposure conditions.

(1) Contact coupling accessories capable of operating while nearby or attached to a handset in held-to-ear voice mode renders the combination to be a portable device. The NPRM and *Order* in WT Docket No. 10-4 precludes the operation of signal boosters in Section 2.1093 portable device RF exposure conditions. (see [R2] ¶¶ 40-41, and *Order* ¶¶ 125-126, 181)

(2) Part 2 subpart J certification in general is valid for representations and test data shown in each equipment authorization record. Handset FCC ID records typically do not include compliance demonstrations when operated with attached coupling accessories.

(3) In general a coupling accessory capable of operating while nearby or attached to a handset is expected to effect the local RF current distributions and thus SAR FCC compliance results for each head and body transmitting configuration as originally reported.[7]

(h) Single device authorized for marketing and operation as both an Industrial Booster [licensee-installed or licensee-expressly-consented; flexible service rules – not subject to Consumer Booster NPS; see also IV)] only or a Consumer Booster only (for personal use if Wideband)

(1) Two different FCC IDs can be used for the single device – one for consumer use and the other for industrial use.

(2) Approval as both a Consumer Booster and Industrial Booster under a single FCC ID.

(i) A composite-Form 731 application is needed, i.e., B2I along with B2W or B2P (see also C.3).

(ii) Each part of the composite-Form 731 application must be stand-alone/self-contained and clearly identified as for a Consumer Booster only or Industrial Booster only; exhibits covering both equipment classes are not allowed in either portion of the composite-Form 731.

(iii) The Industrial Booster only and Consumer Booster only versions must each be marketed and sold separately and must each have unique user's manual, labels, etc., meeting the respective consumer or industrial rule requirements.
Packaging, user's manuals, labels, etc., cannot be assembled such as to market and sell a "dual use" device.
This means for example for the Consumer Booster version, references in any filing exhibits to office, commercial, or industrial use must be omitted.

(iv) Each application must include an attestation that the manufacturer understands and agrees to comply with the prior restriction on selling and marketing the device as either industrial use only or consumer use only, but not dual use.

(i) Example grant conditions and grant comments.

(1) This device is a Wideband Fixed Consumer Signal Booster approved for operating with the coverage/server antenna installed at a fixed location inside a building.

(2) The installation height of the antenna for AWS band (1700/2100 MHz) operations is limited to 10 meters above ground for compliance with Section 27.50.

(3) This Wideband Consumer Signal Booster is authorized only for operation by and marketing to members of the general public for their personal use in accordance with the requirements of Sections 20.21(a)(7) and 20.21(g).

(4) This device is part of a booster system operated with FCC ID *XXX-YYYYYY*.

[7] See for example KDB Publication 447498 "After-market accessories." [R15]

(5) Users and installers must be provided with the antenna kitting and installation and operating instructions and conditions for satisfying RF exposure and Section 20.21(a) compliance.

IV. INDUSTRIAL (PART 20) SIGNAL BOOSTER SPECIFIC REQUIREMENTS

(a) Industrial boosters may only be used by FCC licensees or parties given express (individualized) consent of a licensee

(b) Consent can be in the form of a letter, e-mail or other record sent from a licensee or an agent of a licensee to an operator, owner, or installer of an industrial signal booster with specified frequency bands for retransmission

(c) Industrial booster warning label

(1) Example label [R11]

> **WARNING**. This is **NOT** a **CONSUMER** device. It is designed for installation by **FCC LICENSEES** and **QUALIFIED INSTALLERS**. You **MUST** have an **FCC LICENSE** or express consent of an FCC Licensee to operate this device. Unauthorized use may result in significant forfeiture penalties, including penalties in excess of $100,000 for each continuing violation.

(2) Can be combined with the FCC ID label

(3) The content and location of the label should be presented in the ID Label exhibit

(4) Permanently affixed to a permanently attached part of the equipment enclosure, readily visible

(5) Alternative label text and/or layout requires advance FCC approval

(d) Attestation (must be non-confidential exhibit, signed by the applicant; signature by test lab, agent, or TCB is not acceptable) should include:

(1) Warning label messages will be also shown in online and point-of-sale marketing materials and on outside packaging of device

(e) Operational Description (can request confidentiality) should include:

(1) Provide a list of all operation bands and the scope of the license or the licensee consent

(2) If HW or SW platform permits other frequency bands, describe how are they selected and managed

(3) Describe the automatic power down mechanism and its adjustable range to ensure that the booster operates only with the power necessary to achieve the intended communications

(f) User's Manual (non-confidential or short-term confidential) should include:

(1) Signal booster advisory/warning label message

(2) Caution messages for use of unauthorized antennas, cables, and/or coupling devices not conforming with ERP/EIRP and/or indoor-only restrictions

(3) Describe installation procedure and any power, RF cable, and antenna selection and adjustment guidelines

(4) Licensee contact information (if available)

(5) Preclude indications that device supports home/personal use

(g) Example grant conditions and grant comments (with supporting information in the filing, as usual).

(1) This transmitter operates as a remote unit as part of a system along with host/master unit components as described in this filing, and excluding any other devices connected to the (uplink) output terminal of the master unit.

(2) This application covers only the system configuration with host/master unit connected to a base station in the uplink path; operations if any with host/master unit connected to antenna or amplifier in the uplink require separate equipment authorization.

(3) This device is part of a booster system operated with FCC ID *XXX-YYYYYY*.

(4) The installation height of the antenna for AWS 1710-1755 MHz band operations is limited to 10 meters above ground, for compliance with Section 27.50.

(5) In the 1755-1780 MHz band, device is authorized to operate only as mobile-station equipment, fixed-station operations are prohibited.

V. PART 90 SIGNAL BOOSTER SPECIFIC REQUIREMENTS

(a) Section 90.219 allows booster operation above 150 MHz, but boosters shall not be used to extend the boundary of the normal service area of a specific license

(b) Mobile Class B booster certifications are not permitted

(c) Both Class A and Class B signal boosters can be used outdoors

(d) May not amplify service bands where the operator does not have license or licensee consent

(e) Class B signal boosters cannot amplify both commercial (including CMRS and ESMR) and PLMR bands (except in-building DAS)

(f) Part 90 booster warning label

(1) Example labels (after [R11]):

(i) Minimum information for label is as follows; also the label shall include a statement identifying as a Class A or a Class B device:

Part 90 Signal Boosters **THIS IS A 90.219 CLASS A DEVICE**

WARNING. This is **NOT** a **CONSUMER** device. It is designed for installation by **FCC LICENSEES** and **QUALIFIED INSTALLERS**. You **MUST** have an **FCC LICENSE** or express consent of an FCC Licensee to operate this device. You **MUST** register Class B signal boosters (as defined in 47 CFR 90.219) online at **www.fcc.gov/signal-boosters/registration**. Unauthorized use may result in significant forfeiture penalties, including penalties in excess of $100,000 for each continuing violation.

(ii) Example label variation allowed is as follows, combining Sections 20.21(f)(1)(iv)(B) and 90.219(e)(5)(4) information (NOTE—This example shows Track-Changes for convenience only; actual final labels should omit underlines and font color difference); also the label shall include a statement identifying as a Class A or a Class B device:

Part 90 and Part 20 Signal Booster~~s~~ **THIS IS A 90.219 CLASS A DEVICE**

WARNING. This is **NOT** a **CONSUMER** device. It is designed for installation by **FCC LICENSEES** and **QUALIFIED INSTALLERS**. You **MUST** have an **FCC LICENSE** or express consent of an FCC Licensee to operate this device. You MUST register Part 90 Class B signal boosters (as defined in 47 CFR 90.219) online at www.fcc.gov/signal-boosters/registration. Unauthorized use may result in significant forfeiture penalties, including penalties in excess of $100,000 for each continuing violation.

(2) Label must specify that the booster is a Class A device or a Class B device

(3) The booster label can be combined with the FCC ID label

(4) The content and location of the label should be presented in the FCC ID Label e-filing exhibit

(5) Permanently affixed to a permanently attached part of the equipment enclosure, readily visible

(6) Alternative label text and/or layout requires advance FCC approval

(g) Attestation (must be non-confidential exhibit, signed by the applicant; signature by test lab, agent, or TCB is not acceptable) should include:

(1) Warning label messages and Class A/B disclosure will be also shown in online and point-of-sale marketing materials and on outside packaging of device

(h) Operational Description (can request confidentiality) should include:

(1) Provide a list of all operation bands and the scope of the license or the licensee consent

(2) If HW or SW platform permits other frequency bands, describe how are they selected and managed

(3) Describe the automatic power down mechanism and its adjustable range to ensure that the booster operates only with the power necessary to achieve the intended communications

(i) User's Manual (non-confidential or short-term confidential is acceptable) should include:

(1) Specify booster is Class A device or Class B device

(2) Signal booster advisory/warning label message

(3) Caution messages for use of unauthorized antennas, cables, and/or coupling devices not conforming with ERP/EIRP and/or indoor-only restrictions

(4) Describe installation procedure and any power, RF cable, and antenna selection and adjustment guidelines

(5) Contact information, i.e., licensee for Class A/B devices, if available;
and the FCC at (https://signalboosters.fcc.gov/signal-boosters/) for Class B devices.

(j) Other provisions for part 90 boosters in specific bands and/or for specific conditions.

(1) Equipment authorizations to support both Section 90.219 and higher power operations.

For devices that support output power higher than the 5 W ERP limit of Section 90.219, and are intended for marketing and subsequent US non-federal (FCC) station operations both within and outside the scope of the Section 90.219 authorization and deployment framework,[8] for equipment authorization purposes the following provisions apply.

(i) For equipment to be certified as acceptable for Section 90.219(b) operations, B9A and B9B Form 731 applications must contain test data, install/operating instructions, etc., specifically for the Section 90.219(e) requirements, along with the usual Sections 2.911(c), 2.1033(c), 90.203, and associated contents requirements. In addition, the B9A or B9B application must contain test data, install/operating instructions, etc., for other intended and supported maximum output powers and maximum emissions end-use configurations.

(ii) Per the usual OET practice, the highest output powers for each emission mode are listed on Form 731 line entries. It is preferred, however not required, that the Section 90.219 associated emission modes (reflecting maximum 5 W ERP) are also separately listed on the Form 731 line entries. A grant comment should be applied that specific station authorizations are required for equipment operations exceeding Section 90.219 conditions.

(2) 800 MHz Band operations.

(i) Further to Section 90.219(d)(7) and *Order* ¶¶ 190-193, etc., new equipment applications for 800 MHz SMR need to reflect the post-rebanding channel plan. This generally means:

[8] "[I]f licensees need more than 5 watts ERP per channel for a particular deployment, they can use other allowances in Part 90, including obtaining an additional [station] authorization for a repeater or base station" [*Order*, ¶ 180].
FCC Form 601 (ULS) station class codes used at the time of licensing may include FB (Base), FB2 (Mobile Relay), FB4 (Community Repeater) (http://www.fcc.gov/forms).
For equipment authorizations, OET generally has not established other hardware parameters or requirements to distinguish among the FCC Form 601 station classes established by FCC WTB.

(A) Section 90.614(a) channels (806-817 MHz/851-862 MHz) are subject to Section 90.219 (B9A or B9B) (see also Clause 4 (PLMRS) of KDB Publication 935210 D05 for test procedures guidance).

(B) Section 90.614(b) channels (817-824 MHz/862-869 MHz) are subject to Section 20.21 (B2I) and also Section 90.691 emission limits (see also Clause 3 (CMRS) of KDB Publication 935210 D05 for test procedures guidance).

(C) Relevant frequency bands information is also given in Table D.3 in Appendix D.

(D) The NPSPAC requirements of V) j) 3) apply for all 806-809 MHz/851-854 MHz operations.

(ii) Per Section 90.219(d)(7), the passband of a Class B booster (except for DAS boosters installed in buildings) should not encompass CMRS [e.g., 800 MHz Band ESMR, Cellular Radiotelephone (22H)] along with part 90 PLMRS and/or PSRS (e.g., 800 MHz Band NPSPAC Public Safety, 800 MHz Band Interleaved-PS-B/ILT-SMR).

(iii) For devices that support the Section 90.613 full 800 MHz Band (806-824 MHz/851-869 MHz), a single FCC ID may be used only for DAS booster devices installed and operated in buildings [further to V) j) 2) ii) and Section 90.219(d)(7)].

(A) A Form 731 composite application is required, i.e., B2I along with B9B, consistent with V) j) 2) i).

(B) Complete versions of both the Section 20.21 [IV) c) 1)] and the Section 90.219 [V) f) 1) i)] booster labels are required on the device, or the combined Part 20 and Part 90 label shown in V) f) 1) ii).

(iv) For devices that support the Section 90.613 full 800 MHz Band and that will not be deployed only as DAS boosters installed in buildings, in general two separate FCC IDs with separate Form-731 filings and device-specific contents and test data in each can be appropriate; alternatively applicants may submit for FCC consideration other proposed means to ensure Section 90.217(d)(7) compliance.

(3) 800 MHz NPSPAC Public Safety Band operations.

(i) Further to Sections 90.203(i), 90.203(j)(1), and footnote 6 of the APPLICABLE EMISSION MASKS table in Section 90.210, applications for equipment capable of operating on the NPSPAC public safety channels [806-809/851-854 MHz, Section 90.617(a)(1)] must demonstrate that:

(A) the equipment conforms to Emission Mask H [Section 90.210(h)] when operating on the NPSPAC public safety channels; and

(B) the equipment is capable of operating with analog FM modulation on the NPSPAC mutual aid channels.

(ii) Compliance for the preceding first bullet item can be addressed relative to Sections 90.219(e)(4)(ii) and 90.219(e)(4)(iii) using an appropriate input signal.

(4) 900 MHz Band operations.

(i) For 896-901/935-940 MHz part 90, both Sections 20.21 [see cross-reference in Section 90.219 ¶ 1] and 90.219 apply because those bands include interleaved commercial and private services.
Filings generally need to include compliance test data for Section 90.219(e) items; booster label and install/operating instructions need to address Section 90.219(e)(5) requirements;

install/operating instructions need to explicitly describe how to comply with the Section 90.219 5 W ERP limit.

(ii) For 901-902/940-941 MHz, for US that is allocated and licensable only for part 24 subpart D. Further to the preceding 896-901/935-940 MHz provisions, filings need to address part 24 subpart D compliance, and Section 20.21.

(iii) For 929-930 MHz, both Sections 20.21 [see cross-reference in Section 90.219 ¶ 1] and 90.219 apply because that band includes interleaved commercial and private services.

(A) Section 90.493(a) channels are subject to part 22 licensing and operation rules [Sections 90.493(b), 90.493(c)]; Section 20.21 (B2I) applies for part 22.

(B) Section 90.494(b) channels are subject to part 90 and Section 90.219 (B9B/B9A).

(5) For the remote unit of a conventional fiber-connected host/remote DAS booster system, it is acceptable to submit compliance information and test data consistent with Section 90.219(d)(6)(ii) (i.e., ERP of noise ≤ −43 dBm in 10 kHz RBW) for the downlink path only, in place of Section 90.219(e)(2) noise figure test data (i.e., NF ≤ 9 dB for both UL and DL). Test reports must provide explicit details about the instrumentation and test procedure used for Section 90.219(d)(6)(ii) testing.

(6) 700 MHz Band Part 90 Subpart R Public Safety signal boosters: In addition to the booster device provisions of this document, the basic requirements described in VI) of KDB Publication 971168 D02 (cross-reference based on v02r01) shall also be addressed in application filings.

(k) Limits applicable for Section 90.219(e) booster intermodulation-product emissions test results

(1) Per the following considerations, Section 90.219(e)(3) applies for intermodulation-product emissions.

(i) Section 90.219(e)(4)(i) requires booster output signals to be retransmitted on the same channels as booster input signals; Section 90.219(e)(4)(iii) requires the retransmitted signals to meet their associated unwanted emission limits of Section 90.210.

(ii) Intermodulation-product frequencies are different from the retransmitted signals frequencies of Sections 90.219(e)(4)(i) and 90.219(e)(4)(iii).

(iii) Per the definition of spurious emission in Section 2.1, intermodulation-product emissions are spurious emissions.

(2) The good engineering practice intermodulation-product emission limit of Section 90.219(d)(6) is primarily an end-use installation/operation equipment requirement [*Order* ¶ 178; item II) m) 4) in the present document].

(3) Section 90.219(e) boosters transmitting in Upper 700 MHz Public Safety Narrowband (PS-NB) spectrum (769-775 MHz or 799-805 MHz) or Upper 700 MHz Public Safety Broadband (PS-BB) spectrum (758-768 MHz or 788-798 MHz)

(i) Section 90.219(e)(4)(iii) and the "indicated elsewhere in this part" provision of the first unnumbered paragraph of Section 90.210 requires signals retransmitted by boosters to meet the emission limits of Section 90.543.

(A) Section 90.543(f) applies for all Upper 700 MHz Public Safety boosters.

(B) Section 90.543(e) applies for all booster retransmitted signals Upper 700 MHz PS-BB spectrum

(ii) Boosters simultaneously retransmitting multiple signals in PS-NB spectrum are exempt from the adjacent channel power limits of Section 90.543(a) (per the first unnumbered paragraph of Section 90.543).

(l) Equipment capable of operating as either a Part 90 Class A or a Class B signal booster

(1) Section 90.219 generally prohibits signal boosters capable of operating with passbands greater than 75 kHz to be granted as Class A devices [as defined in Section 90.219(a); see also A.3.1].

(2) In addition, Section 90.219(e)(5) requires Part 90 signal boosters be labeled as either a Class A device or a Class B device (but not both). Single FCC IDs with composite-application B9A and B9B equipment classes are not permitted (see also C.3).

(3) In general two separate FCC IDs are required, i.e., one for the Class A version and another for the Class B version; alternatively, applicants may consult with FCC Wireless Telecommunications Bureau (WTB) to assess whether processing similar as in DA 15-353 [R36] might apply.

(4) Notwithstanding the preceding items, boosters certified as Class B devices can be operated as Class A devices, as long as appropriate user instructions and supporting test data are included in application filings. The Class B booster registration requirement [Section 90.219(d)(5)], along with the Class B device label requirements in Section 90.219 paragraphs (e)(5) and (e)(5)(4), remain applicable.

APPENDIX A

BASIC DEFINITIONS AND CONCEPTS FOR EQUIPMENT AUTHORIZATION PURPOSES

A.1 Booster device terms and definitions

This appendix provides additional guidance about basic definitions and various known types of signal booster devices that are subject to the rules and requirements described in the *Order*, to facilitate equipment authorization application filings under part 2 subpart J of the Commission's rules. Booster, amplifier, and repeater devices operating under other rule parts and/or sections may use basic and specific FCC and OET rules, policies, and procedures for equipment authorization; see II p and A.4 in this document, KDB Publication 935210 D05, and other guidance in KDB Publication 670583 **Error! Reference source not found.** and DA-02-1097 [R26].

A.2 through A.4 summarize basic device-related terms and definitions established by the *Order*, as well as lists a few existing terms and definitions from other FCC rules and documents. A.5 provides supplemental information to assist classifying devices using block diagrams for two basic booster system configurations. In cases where the guidance herein is not clearly applicable, an applicant or agent or test lab should submit a KDB inquiry including device details to obtain guidance from FCC. Other background about terms and concepts is available for example in APPENDIX B "Signal Boosters Terminology and Concepts" of the *Order*.

A.2 Signal boosters in subscriber-based services

The term "signal booster" as used in the *Order* and the associated rule sections includes all manner of

- amplifiers,
- repeaters,
- boosters,
- distributed antenna systems, and
- in-building radiation systems

that serve to amplify signals ***between a device and a wireless network***. [*Order*, ¶ 3, fn 1]

A.2.1 Consumer signal booster (Part 20)

A **Consumer Signal Booster (Part 20)** is a device that automatically receives, amplifies, and retransmits *on a bi-directional basis* the signals received from base, fixed, mobile, or portable stations, with no change in frequency or authorized bandwidth, and that is marketed and sold for use without modification. [Section 20.3]

Consumer Signal Boosters allow individuals [and occasional third-party *de minimis* use; *Order*, ¶ 48; Section 20.21(b)] and subscribers to improve wireless coverage within a limited area such as a home, car, boat, or RV.[9] Consumer Signal Boosters are designed to be installed without third-party professional assistance and used "out-of-the-box" without fine tuning or other technical adjustments. [*Order*, ¶ 13]

[9] See also considerations about Consumer Boosters marketed also for Industrial Booster operations in III h) of this document.

Consumer Signal Boosters can be operated only with approved antennas, cables, and/or coupling devices as specified by the manufacturer of the Consumer Signal Booster. [Section 20.21(a)(3)]

Consumer boosters are further distinguished in terms of the intended operating frequency ranges relative to wireless services providers' frequency bands, as follows.

> **a) Provider-Specific (Frequency Selective, Carrier Specific) Consumer Signal Booster:** A Provider-Specific Consumer Signal Booster may only operate on the frequencies and in the market areas of the specified licensee(s). A Provider-Specific Consumer Signal Booster may only be certificated and operated with the consent of the licensee(s) whose frequencies are being amplified by the device. [Section 20.3]
>
> **b) Wideband Consumer Signal Booster:** A Wideband Consumer Signal Booster may operate on the frequencies and in the market areas of multiple licensees. [Section 20.3]

Besides delineation by congruence of device and service provider frequency ranges [A.2.1 a), b)], all **Consumer Boosters** are also distinguished by station equipment type and RF exposure device type, as follows.

> **c) Fixed Consumer Signal Booster:** A Consumer Signal Booster designed to be operated in a fixed location in a building (i.e., indoors). [Section 20.3] The downlink transmitting antenna at minimum must be installed at a fixed location in a building.
>
> **d) Mobile Consumer Signal Booster:** A Consumer Signal Booster designed to operate in a moving vehicle where both uplink and downlink transmitting antennas are at least 20 cm from the user or any other person. [Section 20.3]

A.2.2 Industrial signal booster (Part 20)

An **Industrial Signal Booster (Part 20)** is any signal booster that is not a Consumer Signal Booster (Part 20) [i.e., CMRS parts 22, 24, 27, 90 (ESMR)].[10] [Section 20.3]

Industrial Signal Boosters are designed to serve multiple users simultaneously. [*Order*, ¶ 16 and fn 31]

Industrial Signal Boosters may be fixed-station equipment or mobile-station equipment, and are designed for installation by licensees or qualified installers. Unlike Consumer Signal Boosters, industrial signal boosters used in the CMRS bands are not distinguished as wideband or provider-specific. Part 90 Signal Boosters, other than Consumer Signal Boosters, are a type of Industrial Signal Booster—see also other specific part 90 terms and definitions below. [*Order*, ¶ 15]

[10] Industrial Signal Boosters include large, high powered devices intended for professional or enterprise use. These devices tend to have more expansive functionality than Consumer Signal Boosters. For example, unlike Consumer Signal Boosters, many Industrial Signal Boosters incorporate remote monitoring capability to allow the operator to use a graphical user interface to control the device's functions, including remote power control, turn-on, and turn-off. The output power and gain for Industrial Signal Boosters are typically multiple times the power and gain of Consumer Signal Boosters. These devices are designed to serve multiple users simultaneously and cover larger areas such as stadiums, shopping malls, office buildings, tunnels, and campuses. An Industrial Signal Booster installation may support a single wireless provider or multiple wireless providers. In addition, such an installation may utilize a greater number of antennas, amplifiers, and other components, compared to Consumer Signal Boosters. [*Order*, ¶ 16]

A.3 Signal boosters for PSRS and PLMRS operations under Part 90 (Section 90.219)

Per the first unnumbered paragraph of Section 90.219, signal boosters operating under part 90 radio service rules and in the Commercial Mobile Radio Services (CMRS) are subject to Section 20.21 rather than Section 90.219.

The following specific terms and definitions apply only for devices subject to Section 90.219.

A.3.1 Signal Booster (Section 90.219)

A **Signal Booster (Section 90.219)** is a device or system that automatically receives, amplifies, and retransmits signals from wireless stations into and out of building interiors, tunnels, shielded outdoor areas and other locations where these signals would otherwise be too weak for reliable communications. Signal booster systems may contain both Class A and Class B signal boosters as components. [Section 90.219(a)]

All **Section 90.219 boosters** are a type of Industrial Signal Booster, and are classified as either **Class A boosters** (narrowband) or **Class B boosters** (wideband).[R11] [*Order*, ¶ 15]

Note also that Consumer Signal Boosters are not defined for PLMRS or PSRS because licensees are considered to operate private services. Part 90 PLMR licensees typically obtain authorizations for individual narrowband channels or groups of channels to satisfy their own communication needs. Moreover, many Part 90 channels are interleaved and a licensee's channels may not be adjacent to one another, which presents unique considerations for signal boosters used with Part 90 PLMR services. [*Order*, ¶ 144]

a) Class A signal booster: A signal booster designed to retransmit signals on one or more specific channels. A signal booster is deemed to be a Class A signal booster if none of its passbands exceed 75 kHz. [Section 90.219(a)]

b) Class B signal booster: A signal booster designed to retransmit any signals within a wide frequency band. A signal booster is deemed to be a Class B signal booster if it has a passband that exceeds 75 kHz. [Section 90.219(a)]

Class B signal boosters may be deployed only at fixed locations; mobile operation of Class B signal boosters is prohibited (after November 1, 2014). [Section 90.219(d)(4)]

Except for signal boosters incorporating distributed antenna systems (DAS) and installed in buildings, the passband of a Class B booster shall not encompass both commercial services (such as ESMR and Cellular Radiotelephone) and Part 90 Land Mobile and Public Safety Services. [Section 90.219(d)(7)]

A.3.2 Distributed Antenna System (DAS) (Section 90.219)

A **Distributed Antenna System (DAS) (Section 90.219)** is a network of spatially separated antenna nodes connected to a common source via a transport medium that provides wireless service within a geographic area or structure. [Section 90.219(a)]

Other considerations on DAS are given in APPENDIX B of this document. A parallel definition for DAS operating under part 20 was not established by the *Order*.

A.4 Booster, amplifier, and repeater devices under other licensed rules

The following terms and definitions are listed for equipment authorization general reference purposes, and are not applicable for Sections 20.21 or 90.219 booster device purposes. [Section 20.21(e)(2)(ii); Section 90.219(a)]

a) **Signal amplifier (Part 90):** A device that amplifies radio frequency signals and is connected to a mobile radio transceiver, portable or handset, typically to the antenna connector. Note that a signal amplifier is not the same thing as a signal booster. [Section 90.7]

b) **External radio frequency (RF) power amplifier (Part 97):** A device capable of increasing power output when used in conjunction with, but not an integral part of, a transmitter. [Section 97.3; see also Section 2.815] *Syn.:* ERFPA.

c) **In-building radiation systems (Part 22):** Supplementary systems comprising low power transmitters, receivers, indoor antennas and/or leaky coaxial cable radiators, designed to improve service reliability inside buildings or structures located within the service areas of stations in the Public Mobile Services. [Section 22.99]

d) **Repeater:** A device that retransmits the signals of other stations. Generally repeaters are different from boosters in that they can include frequency translation and can extend coverage beyond the design of the original base station. A repeater is typically single channel, but can also be multiple channels.

e) **Mobile repeater station (Part 90 PLMRS):** A mobile station authorized to retransmit automatically on a mobile service frequency, communications to or from hand-carried transmitters; used to extend the communications range of hand-carried units. [Section 90.7, Section 90.247]

f) **Mobile relay station (Part 90 PLMRS):** A base station in the mobile service authorized to retransmit automatically on a mobile service frequency communications which originate on the transmitting frequency of the mobile station. [Section 90.7, Section 90.243]

A.5 Block diagrams for classifying and describing booster system basic configurations

A.5.1 Signal amplifier devices

Figure A.1 a) shows a simplified schematic of a (single-enclosure) amplifier device. FCC OET policy for equipment application processing has conventionally reserved use of the Form-731 equipment class AMP only for an external radio frequency power amplifier (ERFPA), i.e., a device inserted between a transmitter (i.e., equipment class TNB/PCB; see APPENDIX C) and an antenna.[11] An ERFPA is defined as having only a single (i.e., uni-directional) antenna transmit port.

A.5.2 Single-enclosure booster devices

Figure A.1 b) shows a simplified schematic of an example single-enclosure consumer booster (Form-731 equipment class B2W or B2P), connecting to a device using either contact/proximity coupling or connection via an RF port/connector. Figure A.2 shows a simplified diagram of a basic single-enclosure booster system and the associated basic parameters.

[11] See also footnote 8 concerning amplifier other example use.

A.5.3 Multiple-enclosure booster systems

Figure A.3 shows a simplified diagram of a basic two-enclosure booster system and the associated basic parameters. Example device types include indoor-DAS and outdoor-DAS (see also A.3.2 and APPENDIX B in this document). Another example is a donor/server Consumer Booster system with two non-identical component enclosures, using 802.11 for the system-internal transport link between the donor unit placed near a window and the server unit placed elsewhere in a building for coverage enhancement.

Where donor-side and server-side components (components B, C of Figure A.3) are not electrically identical, each component generally is subject to separate / individual equipment authorization. For example, where a donor-side device never connects to an antenna for transmitting over-the-air, then only part 15 subpart B digital device authorization can apply.

Donor-side and server-side components generally need to be tested together as a system, and equipment applications need to describe and address compliance for the supported signal and modulation types for each transmission path. The Form-731 provision for "part of a system that operates with, or is marketed with, another device that requires an equipment authorization" needs to be completed as applicable, e.g., when the transport link uses proprietary signaling such that each donor or server component operates only with specific associated booster system devices.

A.5.4 Figures for A.5

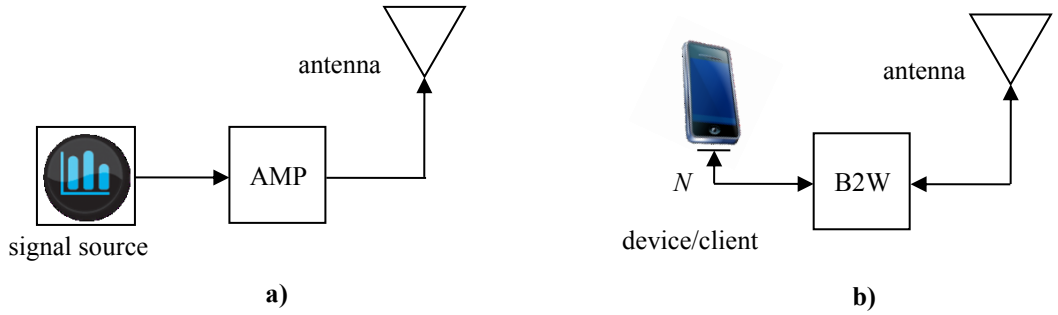

Figure A.1 – Simplified schematics of:
a) single-enclosure amplifier device – Form-731 equipment class AMP;
b) single-enclosure consumer booster – Form-731 equipment class B2W or B2P, connecting to a device at node *N* using either contact/proximity coupling or RF-port connection.

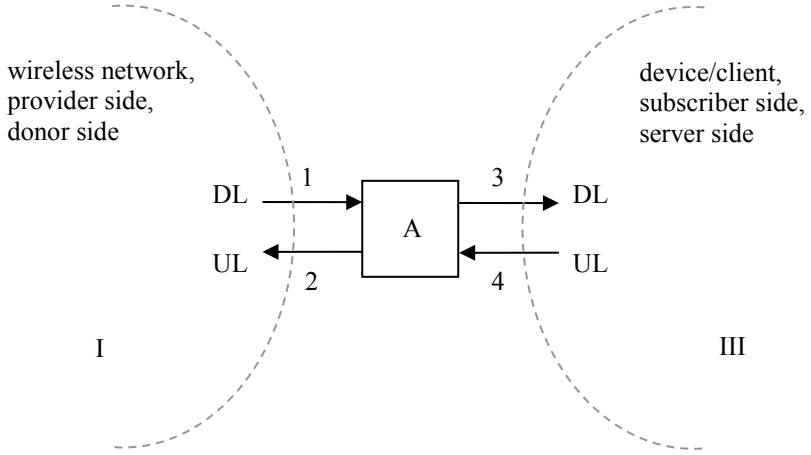

KEY:

- A: Single enclosure booster device, with donor-side and server-side ports.
- UL, DL: Uplink (subscriber / mobile station to provider / base station); downlink (provider / base station to subscriber / mobile station).
  Each of donor-side and server-side may or may not connect to over-the-air antenna(s).
- 1…4: Signal paths 1,2,3,4 typically are parts 22, 24, 27, 90 paired-band frequencies.
- I, III: Region I: provider / base-station coverage;
  Region II: booster internal operations;
  Region III: subscriber / mobile-station coverage, e.g., indoors, dead spot (Section 22.99).

Figure A.2 – Simplified schematic of single-enclosure booster device, and signal path and coverage/operations regions geometries

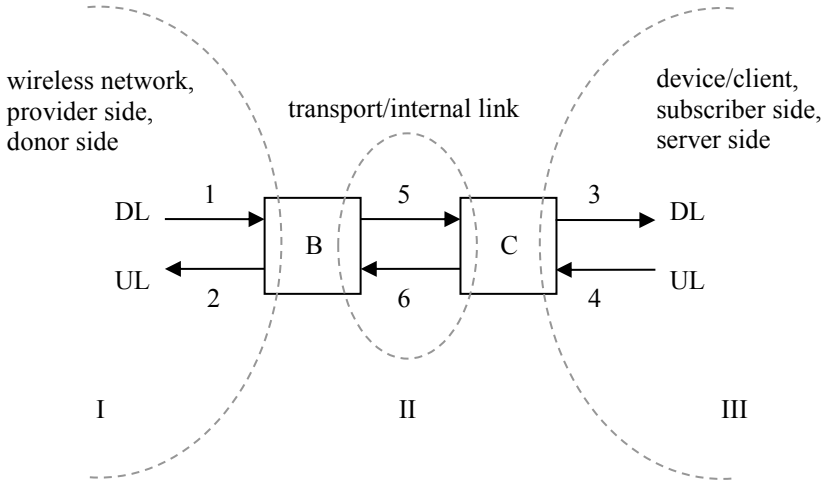

KEY:

- B, C: Donor-side and server-side system components.
  For this basic configuration, components B,C may or may not be (RF) electrically identical.
  B,C typically are tested together as a system, however generally each may be subject to separate / individual equipment authorization (e.g., separate FCC IDs).
- UL, DL: Same as in Figure A.2.
- Signal paths 1,2,3,4 frequencies are as in Figure 2.
- Signal paths 5,6 are system internal "transport" paths, typically RF-on-fiber-optic or coax cable or over-the-air locally; for the latter two, either on-channel or frequency-shifted.
- I, II, III: Same as in Figure A.2.

Figure A.3 – Simplified schematic of two-enclosure booster system, and signal path and coverage/operations regions geometries

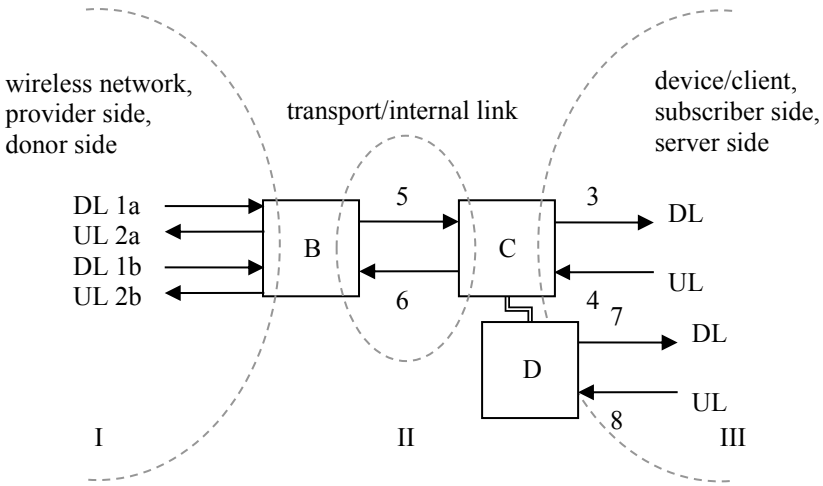

KEY:

- B, C: Same as in Figure A.3.
  D: RF expansion unit or additional remote unit; may be installed internal or connected external to remote unit C.
- UL, DL: Same as in Figure A.2.
- Signal paths 1a,2a,3,4 frequencies are as in Figure 2 (1,2,3,4 therein).
- Signal paths 1b,2b,7,8 typically are parts 22, 24, 27, 90 paired-band frequencies, and are different frequencies from 1a,2a,3,4 (aka single-input single-output, SISO).
- Signal paths 5,6 typically are same as in Figure A.3.
- I, II, III: Same as in Figure A.2.

Figure A.4 – Simplified schematic of multiple-enclosure booster system (SISO), and signal path and coverage/operations regions geometries

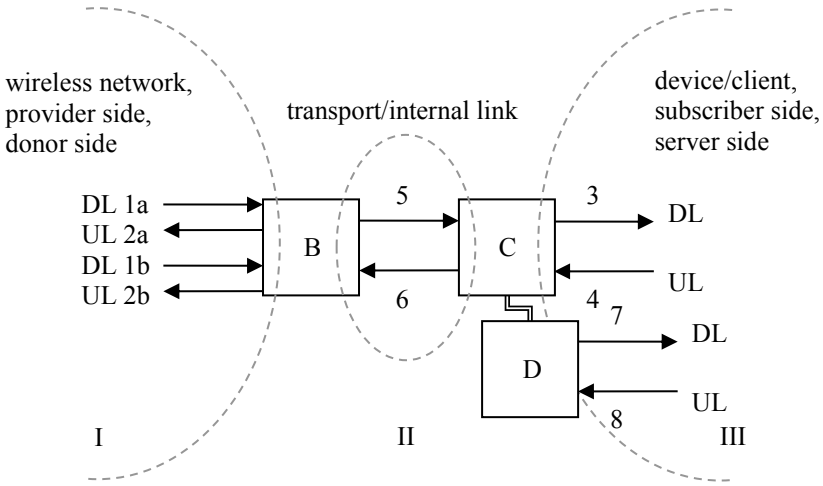

KEY:

- B, C, D: Same as in Figure A.4.
- UL, DL: Same as in Figure A.2.
- Signal paths 1a,2a,3,4 frequencies are as in Figure 2 (1,2,3,4 therein).
- For MIMO (multiple-input multiple-output) operations, signal paths 1b,2b,7,8 are same frequencies as 1a,2a,3,4.
- Signal paths 5,6 typically are same as in Figure A.3; however, some designs may use two separate transport paths for the two MIMO streams.
- I, II, III: Same as in Figure A.2.

Figure A.5 – Simplified schematic of multiple-enclosure booster system for MIMO operations, and signal path and coverage/operations regions geometries

APPENDIX B

CONSIDERATIONS ON DISTRIBUTED ANTENNA SYSTEMS AND DISTRIBUTED RADIO SYSTEMS FOR EQUIPMENT AUTHORIZATIONS

B.1 Basic host/remote RF distribution systems

One example conventional booster device type has been a fiber-optic distribution system that receives RF signals from an antenna, distributes the signal over fiber-optic cable, and then retransmits at another location, for example within a building or tunnel. Most fiber-optic systems have been considered to be signal boosters; however, some may meet the definition of repeaters (i.e., frequency translation; see also B.2, *Order* ¶ 3 fn 1, and APPENDIX A). Similar considerations apply for booster systems using coaxial cable for the system transport/internal path(s).

These systems generally have two or more enclosures typically called host (or local or donor unit) and remote (or coverage or server unit). Some systems may also have an optional "expansion" component for fan-out to multiple remotes. Generally fiber-optic systems transmit downlink signals from the remote unit to handsets, portables, or clients, and transmit uplink signals via the host unit.

Usually but not always the uplink of a fiber-optic booster system goes through an intermediate amplifier to a "donor" antenna. Therefore both uplink and downlink paths must be tested, unless an equipment application filing effectively documents how connection of the uplink path to a donor antenna with or without an intermediate amplifier will be prevented; for example use with only a cabled direct connection to a base station is ensured.

Fiber-optic booster systems are typically comprised of two or more of the following components, each described further below: host unit (might be digital device only); remote unit; expansion unit; passive interface unit; active interface unit.

1) ***host unit***
- a) transmits uplink to base station via antenna thru coaxial cable, typically either a ***passive interface unit***, or an ***active interface unit*** (amplifier)
- b) sends base-station downlink via fiber-optic or coaxial cable to ***remote***
- c) receives handset uplink via fiber-optic or coaxial cable from ***remote***
- d) optional connection to ***expansion unit*** via fiber-optic
- e) separate FCC ID from ***remote***, unless electrically identical
- f) ***non-transmitting host unit***
  - i) connects directly to a base station via coaxial cable but cannot connect to antenna and/or amplifier
  - ii) Part 15 digital device subject to Verification, no FCC ID

2) ***remote unit***
- a) receives base-station downlink via fiber-optic or coaxial cable from ***host***, transmits via antenna to handsets
- b) returns handset uplink via fiber-optic or coaxial cable to ***host***
- c) separate FCC ID from ***host***, unless electrically identical

3) ***fiber-optic expansion unit***
   a) fiber-optic or coaxial cable from ***host***
   b) fiber-optic or coaxial cable fan-out to ***remote(s)***
   c) Part 15 digital device subject to Verification, no FCC ID
4) ***RF expansion unit***
   a) internal or external device used to add band(s) and/or transmit mode(s) to a ***remote***
   b) operates only when connected to a ***remote unit*** as part of a booster system
   c) contains signal-processing functions to convert baseband signal into modulated RF signal
   d) use equipment class PCB or TNB for an ***RF expansion unit*** (the associated ***remote*** uses an equipment class Bxx per **Table C.1** of this document, e.g., B2I)
5) ***passive interface unit***
   a) contains attenuators, splitters, combiners
   b) coaxial cable RF connection between ***host*** and base-station
   c) passive device, no FCC ID
6) ***active interface unit***
   a) amplifies uplink signal from ***host unit*** for transmit by donor antenna
   b) attenuates downlink from donor antenna
   c) coaxial cable RF connection between ***host*** and ***active interface unit***
   d) usually has separate FCC ID; in some cases could be combined/included with ***host*** as one enclosure

B.2 Distributed antenna systems

The term "signal booster" as used in the *Order* and the associated rule sections includes all manner of distributed antenna systems and in-building radiation systems that serve to amplify signals between a device and a wireless network. [*Order*, ¶ 3, fn 1] A distributed antenna system (DAS) is a system of spatially separated antennas connected via cables (i.e., coaxial or fiber optic cable) to a signal source, such as a base station or an external antenna capable of communicating with a base station wirelessly. DAS are used to distribute wireless signals through large structures such as skyscrapers, hospitals, hotels, arenas and tunnels where the signal coverage may be lacking or to increase the capacity of the wireless system by achieving channel reuse on a smaller scale. Some DAS configurations may be considered signal boosters when the network of internal antennas achieves communication through the use of an amplifier that is connected to an external antenna that communicates with a base station wirelessly. [*Order*, APPENDIX B ¶ 3]

Distributed antenna systems ("DAS") are one alternative to the use of macrocells mounted on tall antenna structures for wireless coverage. A DAS network is used to distribute RF signals from a central hub to a specific area with poor coverage or inadequate capacity. Because the facilities deployed at each node of a DAS are physically much smaller than for example macrocell base station and antenna equipment, they can be placed on a variety of short structures or on rooftops. Macrocells and small cells are usually operator-managed and support use by a single wireless service provider, whereas DAS networks can often accommodate multiple wireless providers using different frequencies and/or wireless air interfaces. ([R21], ¶ 16)

A DAS network consists of: (i) a number of remote communications nodes deployed throughout the desired coverage area, each including at least one antenna for the transmission and reception of a wireless service provider's RF signals, (ii) a high capacity signal transport medium (typically fiber optic cable) connecting each node to a central communications hub site, and (iii) radio transceivers located at the hub site (rather than at each individual node as is the case for small cells) to process or control the communications signals transmitted and received through the antennas. [R21]

Some industry literature further distinguishes between active DAS and passive DAS, the main difference being whether a remote communications node has only an antenna or also has RF hardware. Some industry literature has also referred to active DAS as distributed radio systems. In general, for equipment authorization purposes compliance demonstration of the antenna system portion of a passive DAS for operation under FCC licensed radio service rules is addressed by appropriate Section 2.1033(c) installation and operating instructions.

B.3 Distributed base station systems

In general mobile radio base stations consist of a baseband unit (BBU) and a radio frequency unit (RFU), which in a distributed base station architecture usually is a remote radio head (RRH).[R22],[R23] CPRI (Common Public Radio Interface) is one example protocol that allows the use of a distributed architecture where base stations, containing the radio equipment control, are connected to remote radio heads via lossless fiber-optic links that carry the CPRI data.[R21]

RRH devices used for distributed base station (DBS) systems as described here generally are not subject to Sections 20.21 and 90.219 booster rules. Similarly as for multiple-enclosure booster systems described in B.1 and APPENDIX A, where the BBU and RRH components for a DBS system are not electrically identical, each component generally is subject to separate / individual equipment authorization. For example, only part 15 subpart B digital device authorization might apply for a (non-transmitting) BBU.

BBU and RRH components generally need to be tested together as a system, and equipment applications need to describe and address compliance for the supported signal and modulation types for each transmission path. The Form-731 provision for "part of a system that operates with, or is marketed with, another device that requires an equipment authorization" needs to be completed as applicable, e.g., when the transport link uses proprietary signaling such that each BBU or RRH component operates only with specific associated DBS system devices.

APPENDIX C

EQUIPMENT AUTHORIZATION SYSTEM (EAS) FORM-731 EQUIPMENT CLASS DESIGNATORS

C.1 Applicable equipment classes

Equipment classes to be used for signal booster device applications are shown in Table C.1.[12] An applicant or agent or test lab should submit a KDB inquiry providing device details to get FCC guidance in case equipment class and/or allowed composite-application conditions are unclear for any specific device.

Table C.1 – Form-731 Equipment Classes for Licensed-Service Signal Booster and Related Equipment Types

B2W	Part 20 Wideband Consumer Booster (CMRS 22/24/27/90-S)
B2P	Part 20 Provider-Specific Consumer Booster (CMRS 22/24/27/90-S)
B2I	Part 20 Industrial Booster (CMRS 22/24/27/90-S)
B9A	Part 90 Class A Industrial Booster (PLMRS, PSRS, non-cellular SMR)
B9B	Part 90 Class B Industrial Booster (PLMRS, PSRS, non-cellular SMR)
BOS	Other signal boosters (not subject to Sections 20.21, 90.219; also for some frequencies not listed in Table D.1 and Table D.2 of this document)
AMP	Amplifier (i.e., ERFPA)
PCB	PCS Licensed Transmitter (new grants for booster devices use Bxx equipment classes)
TNB	Licensed Non-Broadcast Station Transmitter (new grants for booster devices use Bxx equipment classes)
NOTE 1–For background, since the early 2000s FCC OET policy was that the equipment class AMP is used for basic unidirectional-path signal amplifier devices, and equipment classes PCB or TNB for all other signal booster and related device types. NOTE 2–In the above, 90-S refers to part 90 subpart S, i.e., ESMR per Sections 90.209(b)(7), 90.614(b),(c).	

[12] The EAS Form-731 equipment class is a three character code which is used by FCC to define a type of equipment and the radio service in which it is used; (https://apps.fcc.gov/oetcf/eas/reports/EquipmentRulesList.cfm).
In many cases the rule part and type of operation intended (i.e. portable, mobile, base station, handheld, etc) can be determined from the equipment class.

The equipment class also generally determines the required exhibit types in a Form-731 application [§§ 2.1033(c), 2.911(c)] (https://apps.fcc.gov/oetcf/eas/misc/EasFaq.cfm).

C.2 Form 731 entries

a) For ERFPA
   1) In one enclosure
      i) Equipment Class – AMP
      ii) List AMP in frequency tolerance field of Form 731
      iii) List emission designators without necessary bandwidth (e.g., F3E, F1D)
   2) In two enclosures – Does not exist (if it does, use same entries as for one enclosure)
   3) Testing of ERFPA devices should generally apply the guidance and procedures of KDB Publications 935210 D05 and 971168 [R25].

b) For Booster
   1) In one enclosure
      i) Equipment Class – BOS, B2I, B9A, or B9B
      ii) List AMP in frequency tolerance field of Form 731
      iii) List emission designators without necessary bandwidth (e.g., F3E, F1D)
      iv) List in Form-731 description or comments field the word "booster"
   2) In two enclosures (host/remote)
      i) Two separate FCC IDs/applications
      ii) Equipment Class – BOS, B2I, B9A, or B9B
      iii) List AMP in frequency tolerance field of Form 731
      iv) List emission designators without necessary bandwidth (e.g., F3E, F1D)
      v) List in comments field the words "Part of booster system used with FCC ID: xxxyyy." (Where xxxyyy is FCC ID of other device(s) in system).

c) For Repeater
   1) In one enclosure
      i) Equipment Class – BOS, B2I, B9A, or B9B
      ii) List AMP in frequency tolerance field of Form 731 if device contains no frequency translation; otherwise, measure frequency tolerance and list.
      iii) List in comments field the word "repeater"
   2) In two enclosures (host/remote)
      i) Two separate FCC IDs/applications
      ii) Equipment Class – BOS, B2I, B9A, or B9B
      iii) List AMP in frequency tolerance field of Form 731 if device contains no frequency translation; otherwise, measure frequency tolerance and list.
      iv) List in comments field the words "Part of repeater system used with FCC ID: xxxyyy." (Where xxxyyy is FCC ID of other device(s) in system).

C.3 Devices with multiple equipment classes under a single FCC ID – composite applications

a) FCC OET application filing procedures require more than one Form-731 per FCC ID whenever a device has operations subject to multiple rule parts or rule sections each with different equipment classes; such a multiple-Form-731 FCC ID is known as a composite-system application [Section 2.1033(e)]. For signal booster devices, composite applications (i.e., single FCC ID) with

more than one of the equipment classes listed in Table A.1 (e.g., B2W and B2P, or B9A and B9B[13]) are not permitted.

b) For booster system devices using a wireless link for system-internal operations (see discussion in APPENDIX A of this document), composite applications are permitted; e.g., 802.11 under part 15 (equipment class DTS and/or NII) along with B2P.

c) Booster devices that include signal paths for transmitting on part 15 frequencies from the donor port and/or server port (not including booster systems using part 15 on system-internal transport links) generally are considered to be part 15 amplifiers subject to Section 15.204 requirements and the policies and procedures of KDB Publication 602159.[R24]

C.4 Permissive change for consumer devices granted before February 20, 2013

The following applies for booster devices with grants issued before February 20, 2013 (i.e., typically equipment class AMP or TNB or PCB), and that have been previously marketed and operated as what would now be considered a Consumer Booster under the FCC 13-21 new framework.

a) Permissive change applications can be processed by TCBs to update representations and/or test data (install/operate instructions, labeling, etc.) under the FCC ID for subsequent marketing and operation only as an Industrial Booster under the FCC 13-21 new framework.

b) Section III h of this document describes conditions for new single-FCC ID composite-Form 731 Industrial Booster (B2I) and Section 20.21 Consumer Booster (B2W or B2P) devices. For consumer devices with pre-existing FCC ID similarly intended for subsequent marketing and operation both as Industrial Booster only or Section 20.21 Consumer Booster only, a new FCC ID composite-Form 731 is required (i.e., rather than a permissive change to the pre-existing FCC ID).

C.5 Permissive changes for non-consumer devices granted before February 20, 2013

The following applies for booster devices with grants issued before February 20, 2013 (i.e., typically equipment class AMP or TNB or PCB), and that have been previously marketed and operated as what would now be considered as an Industrial Booster under the FCC 13-21 new framework.

a) PLMRS and PSRS part 90 devices
   1) PLMRS and PSRS part 90 boosters are industrial boosters, and are subject to the new rules and KDB Publication 935210 D02 policies and procedures.

   2) For PLMRS/PSRS bands (e.g, see Table D.3), since March 1, 2014 all industrial boosters sold and marketed in US have been required to comply with Section 90.219(e); i.e., explicit compliance information and test data must be on file under the FCC ID, along with explicit labelling identifying a device as Section 90.219(a) Class A or Class B, and with associated installation/operation instructions.

   3) Booster device/system subsequent operations must comply with Sections 90.219(a) to 90.219(d). [FCC 13-21 ¶¶ 187, 194-195, etc.]

[13] §§ 90.219(a), 90.219(e)(5); Order ¶ 15 n.28, ¶ 156, ¶ 186, ¶ 189; § 2.925(b)(1).

4) Depending on details of specific existing FCC IDs and operating frequencies, a new FCC ID rather than a permissive change might need to be considered; applicants or agents should submit a KDB inquiry to request guidance.

b) CMRS parts 22, 24, 27, 90 devices

1) For the CMRS bands listed in Table D.2, non-consumer boosters are industrial boosters, subject to Sections 20.21(c) and 20.21(f)(1).

2) Equipment authorization permissive change for legacy non-consumer industrial boosters to update labelling and install instructions per Section 20.21(f) is allowed but is not required.

3) Permissive change filings shall retain the existing/legacy equipment class (i.e., AMP or TNB or PCB), without change to B2I.

4) For CMRS bands (see Table D.2), since March 1, 2014 all industrial boosters sold and marketed in US have been required to comply with Section 20.21(f), regardless whether a permissive change is filed or not.

5) Booster device/system subsequent operations must comply with Sections 20.21(c), 20.21(d). [FCC 13-21 ¶¶ 6, 110-116]

APPENDIX D

FREQUENCY BANDS FOR SIGNAL BOOSTERS UNDER SECTIONS 20.21 AND 90.219

Consumer Signal Boosters must be designed and manufactured such that they operate only on the frequencies and rule parts used for the provision of subscriber-based services [Section 20.21(e)(3)], i.e., as listed in the following Table D.1.

Form-731 extended frequency listings per the provisions of KDB Publication 634817 [R14] are not permitted for Consumer Signal Booster equipment grants.

Industrial Signal Boosters that are to be professionally installed and operated in close coordination with affected licensees are not limited to specific spectrum bands. [*Order*, ¶ 36] Nonetheless, Table D.2 lists bands generally available for CMRS Industrial Signal Boosters.

Table D.3 lists the basic Part 90 PLMRS bands, for reference.[14]

Table D.1 – Frequency Bands (in MHz) and Rule Parts for Consumer Signal Booster Equipment Grants

22 (Cellular)	824-849 UL 869-894 DL
24 (Broadband PCS)	1850-1915 UL 1930-1995 DL
27-L (AWS-1)	1710-1755 UL 2110-2155 DL
27 (Lower A-E Blocks)	A 698-704 / 728-734 B 704-710 / 734-740 C 710-716 / 740-746 D 716-722 E 722-728
27 (700 MHz Upper C Block)	746-757 DL 776-787 UL
90 (Specialized Mobile Radio) [a] [Sections 90.614(b), 90.614(c)]	813.5/817-824 UL 858.5/862-869 DL
[a] Consumer Signal Boosters for operation on Part 90 (Specialized Mobile Radio) frequencies will not be certificated until the FCC releases a Public Notice announcing the date that Consumer Signal Boosters may be used in the band [see Section 20.21(e)(3)].	
NOTE—Equipment authorization for Consumer Signal Boosters is permitted only for the frequency bands and service rules listed, but is NOT available for various bands recently established, e.g., AWS-4, AWS-3.	

[14] FCC WTB Wireless Services – Industrial/Business, (http://wireless.fcc.gov/services/index.htm?job=service_bandplan&id=industrial_business).

Table D.2 – Industrial Signal Booster Authorized Frequency Bands for Section 20.21(c)

FCC Band Name	†UL (MHz): UE tx; BS rx	†DL (MHz): BS tx; UE rx	Channel Block Assignments	Selected FCC Rule Sections
600 MHz Service (600 MHz Band)	663-698	617-652	**Block A:** 617-622 MHz paired 663-668 MHz; **Block B:** 622-627 MHz paired 668-673 MHz; **Block C:** 627-632 MHz paired 673-678 MHz; **Block D:** 632-637 MHz paired 678-683 MHz; **Block E:** 637-642 MHz paired 683-688 MHz; **Block F:** 642-647 MHz paired 688-693 MHz; **Block G:** 647-652 MHz paired 693-698 MHz	Sections 27.4 ¶ 1, 27.5(l), 27.50(c), 27.53(g). Section 27.50(c)(10) fixed-station UL max. 3 W ERP
Lower 700 MHz	698-716	716-746	**Block A:** 698-704 MHz (UL) paired 728-734 (DL); **Block B:** 704-710 MHz (UL) paired 734-740 MHz (DL); **Block C:** 710-716 MHz (UL) paired 740-746 MHz (DL); **Block D:** 716-722 MHz (DL), unpaired; **Block E:** 722-728 MHz (DL), unpaired	Sections 27.5(c), 27.50(c), 27.53(g).
Upper 700 MHz	776-787	746-757	**Block A:** 757-758 MHz paired 787-788 MHz; **Block B:** 775-776 MHz paired 805-806 MHz; **Block C:** 776-787 MHz (UL) paired 746-757 MHz (DL)	Sections 27.5(b), 27.50(b), 27.53(c), 27.53(f).
ESMR	817-824	862-869	N/A	Sections 90.614, 90.635, 90.691.
Cellular	824-849	869-894	**Block A:** 824-835 MHz (UL) paired 869-880 MHz (DL), and 845-846.5 MHz (UL) paired 890-891.5 MHz (DL); **Block B:** 835-845 MHz (UL) paired 880-890 MHz (DL), and 846.5-849 MHz (UL) paired 891.5-894 MHz (DL)	Sections 22.905, 22.913, 22.917.
AWS-1	1710-1755	2110-2155	**Block A:** 1710-1720 MHz (UL) paired 2110-2120 MHz (DL); **Block B:** 1720-1730 MHz (UL) paired 2120-2130 MHz (DL); **Block C:** 1730-1735 MHz (UL) paired 2130-2135 MHz (DL); **Block D:** 1735-1740 MHz (UL) paired 2135-2140 MHz (DL); **Block E:** 1740-1745 MHz (UL) paired 2140-2145 MHz (DL); **Block F:** 1745-1755 MHz (UL) paired 2145-2155 MHz (DL)	Sections 27.5(h), 27.50(d), 27.53(h). 27.50(d)(4) "Fixed ... stations operating in the 1710-1755 MHz band ... are limited to 1 watt EIRP. Fixed stations operating in the 1710-1755 MHz band are limited to a maximum antenna height of 10 meters above ground. ..."
AWS-3	1695-1710 1755-1780	2155-2180	**Block A1:** 1695-1700 MHz (UL), unpaired; **Block B1:** 1700-1710 MHz (UL), unpaired; **Block G:** 1755-1760 MHz (UL) paired 2155-2160 MHz (DL); **Block H:** 1760-1765 MHz (UL) paired 2160-2165 MHz (DL); **Block I:** 1765-1770 MHz (UL) paired 2165-2170 MHz (DL); **Block J:** 1770-1780 MHz (UL) paired 2170-2180 MHz (DL)	Sections ... 27.77, 27.1134, 27.5(h). 2175-2180 MHz fka AWS-2 J block. Fixed stations prohibited from operating in the 1695-1710 MHz and 1755-1780 MHz bands. [FCC-14-31 ¶ 78; also ¶¶ 206, 207]
Broadband PCS	1850-1915	1930-1995	**A Block:** 1850-1865 MHz (UL) paired 1930-1945 MHz (DL); **B Block:** 1870-1885 MHz (UL) paired 1950-1965 MHz (DL); **C Block:** 1895-1910 MHz (UL) paired 1975-1990 MHz (DL); **D Block:** 1865-1870 MHz (UL) paired 1945-1950 MHz (DL); **E Block:** 1885-1890 MHz (UL) paired 1965-1970 MHz (DL); **F Block:** 1890-1895 MHz (UL) paired 1970-1975 MHz (DL); **G Block:** 1910-1915 MHz (UL) paired 1990-1995 MHz (DL)	Sections 24.229, 24.232, 24.238.
AWS-2	1915-1920	1995-2000	1915-1920 MHz (UL) paired 1995-2000 MHz (DL)	Sections ... 27.5(k). aka AWS-2 H block. 27.50(d)(9) Fixed ... stations operating in the 1915-1920 MHz band are limited to 300 mW EIRP.
AWS-4	2000-2020	2180-2200	**Block A:** 2000-2010 MHz (UL) paired 2180-2190 MHz (DL); **Block B:** 2010-2020 MHz (UL) paired 2190-2200 MHz (DL)	... 27.5(j) ... See DA 13-2409 [R32] conditions for DL 2000-2020 MHz.
WCS	2305-2320	2345-2360	**Block A:** 2305-2310 MHz paired 2350-2355 MHz; **Block B:** 2310-2315 MHz paired 2355-2360 MHz; **Block C:** 2315-2320 MHz (UL), unpaired; **Block D:** 2345-2350 MHz (DL), unpaired	Sections 27.50(a)(1)(i), 27.50(a)(1)(ii). As an industrial (licensee authorized/operated) not consumer booster, 27.50(a)(2) "customer premise" station provisions generally should not apply.
BRS/EBS	2496-2690	2496-2690		2495-2496 MHz is guardband (reserved; not available). See also BRS/EBS info in KDB Pub. 971168 D02 [R25].

† UE = user equipment (donor-port transmit); BS = base station (server-port transmit); UL = uplink (donor-port transmit); DL = downlink (server-port transmit); tx = transmit; rx = receive

Table D.3 – Various Part 90 PLMRS band allocations, rule parts/sections, and service types for Section 90.219 purposes (for info only – see rules for details, also KDB Publication 634817 [R14])

F_L (MHz)	–	F_L (MHz)	Rule(s)	Misc. Notes
150	–	150.05	Federal (non-FCC)	
150.05	–	150.8	90.265	
150.8	–	162.0125	90	
162.0125	–	173.2	90.265	
173.2	–	173.4	90	
173.4	–	174	Federal (non-FCC)	
406.1	–	420	90.265	
420	–	421	ULS presently shows no licensees for 420-420.9 MHz	
421	–	430	90	
430	–	450	Not available under 90 subparts B, C land mobile service	
450	–	470	90 (selected bands)	
470	–	512	90	
746	–	757	27.5(b)(3) Block C; 90 not available	
757	–	758	27.5(b)(1) Block A; 90 not available	
758	–	768	90-R, Public Safety (PS) Broadband (FirstNet)	B9B (LTE)
768	–	769	PS Guardband	
769	–	775	PS Narrowband	
775	–	776	27.5(b)(2) Block B; 90 not available	
776	–	787	27.5(b)(3) Block C; 90 not available	
787	–	788	27.5(b)(1) Block A; 90 not available	
788	–	798	90-R, Public Safety (PS) Broadband (FirstNet)	B9B (LTE)
798	–	799	PS Guardband	
799	–	805	PS Narrowband	
805	–	806	27.5(b)(2) Block B; 90 not available	
806	–	809	90 NPSPAC (PS) [90.617(a)(1)]	B9B/B9A
809	–	815	90 Interleaved PS; B/ILT; SMR [90.614(a); 90.613 ch. nos. 1-470][a]	B9B/B9A
815	–	816	90 Expansion B/ILT; SMR [90.614(a); 90.613 ch. nos. 470-550][a]	B9B/B9A
816	–	817	90 Guardband	B9B/B9A
817	–	824	CMRS 90 ESMR [90.614(b); 90.613 ch. nos. 551-830]	B2I 90-S
824	–	849	22 H; 90 not available	B2I
849	–	851	22 G; 90 not available	BOS
851	–	854	90 NPSPAC (PS) [90.617(a)(1)]	B9B/B9A
854	–	860	90 Interleaved PS; B/ILT; SMR [90.614(a); 90.613 ch. nos. 1-470][a]	B9B/B9A
860	–	861	90 Expansion B/ILT; SMR [90.614(a); 90.613 ch. nos. 470-550][a]	B9B/B9A
861	–	862	90 Guardband	B9B/B9A
862	–	869	CMRS 90 ESMR [90.614(b); 90.613 ch. nos. 551-830]	B2I 90-S
869	–	894	22-H; 90 not available	B2I
894	–	896	22-G; 90 not available	BOS
896	–	901	90 Interleaved B/ILT [90.617(c)] and SMR [90.617(f)]; UL (donor)	B2I 90-S & B9B/B9A 90-S
901	–	902	24-D; 90 not available	B2I
928	–	929	101; 90 not available[b, c]	BOS
929	–	930	90[d, e]	B9B/B9A
930	–	931	24-D; 90 not available	B2I
931	–	932	22-E; 90 not available	B2I
932	–	935	101; 90 not available	BOS
935	–	940	90 Interleaved B/ILT [90.617(c)] and SMR [90.617(f)]; DL (server)	B2I 90-S & B9B/B9A 90-S
940	–	941	24-D; 90 not available	B2I

[a] For devices that cover 813.5-817/858.5-862 MHz bands, applicants must specify whether the device is for CMRS or private use so that the appropriate rules can be applied.

[b] Regardless that the 2.106 table lists parts 22 and 90 for 928-929 MHz, and part 22 for 932-935 MHz, the latter band is not provided in part 90, and § 22.621 indicates that part 101 subpart O governs for technical operations of any part 22 incumbent licensees.

[c] For the purposes of this document, the listings in Table D.3 for 928-935 MHz are based primarily on the FCC Spectrum Dashboard. Because the Spectrum Dashboard is based on ULS records, the associated rule part scheme is used in Table D.3, regardless that the Spectrum Dashboard is no longer being updated by FCC. Equipment authorization applications requesting differing rule parts for 928-935 MHz should include information on the intended pending or active station authorization(s).

[d] Per § 90.493(c) part 22 eqpt. auth. in lieu of part 90 (with § 90.219) allowed for § 90.493(a) channels [per §§ 90.493(b) and 90.493(c), the technical requirements for the 931-932 MHz part 22 channels apply for the 929-930 MHz § 90.493(a) channels].

[e] Part 90 eqpt. auth. required for § 90.494(b) channels (§ 90.219 applies).

APPENDIX E

NETWORK PROTECTION STANDARD (NPS) – PARAPHRASED SUMMARY OF RULE PARAGRAPHS, MEASUREMENT QUANTITIES, AND REQUIREMENTS[15]

The following table includes blue font strikethrough (deleted) and underline (new) text applicable since the Dec. 29, 2014 effective date listed in the Federal Register for rules established under FCC-14-138 (79 FR 70790-70796).

§ 20.21(e)(8) ***Wideband Consumer Signal Boosters.***	§ 20.21(e)(9) ***Provider-Specific Consumer Signal Boosters.***
§ 20.21(e)(8)(i) *Technical Requirements*	§ 20.21(e)(9)(*i*) *Technical Requirements*
§ 20.21(e)(8)(i)(A) *Noise Limits.*	§ 20.21(e)(9)(*i*)(A) *Noise Limits.*
§ 20.21(e)(8)(i)(A)(*1*) UL ~~and DL~~ ports transmitted noise power [dBm/MHz]: $P_{TN} \leq -(103+RSSI)$.	UL and DL ports transmitted noise power [dBm/MHz] outside licensee's blocks, § 20.21(e)(9)(*i*)(A)(*1*): $P_{TN} \leq -(103+RSSI)$
RSSI is DL composite received signal power P_{RS} [dBm] at donor port for all operating-band BS.	§ 20.21(e)(9)(*i*)(A)(*1*)(*i*): RSSI is DL composite received signal power P_{RS} [dBm] at donor port for all outside licensee's blocks operating-band BS.
	§ 20.21(e)(9)(*i*)(A)(*1*)(*ii*) Device MSCL < 40 dB requires: $P_{TN} \leq -(103+RSSI) - (40-MSCL)$.
§ 20.21(e)(8)(i)(A)(*2*) UL and DL ports maximum transmitted noise power [dBm/MHz]:	§ 20.21(e)(9)(*i*)(A)(*2*)
§ 20.21(e)(8)(i)(A)(*2*)(*i*) Fixed booster: $P_{TN,max} \leq (-102.5+20\lg f_{MHz})$. f_{MHz} is UL midband frequency.	§ 20.21(e)(9)(*i*)(A)(*2*)(*i*) Fixed booster DL maximum: $P_{TN,max} \leq (-102.5+20\lg f_{MHz})$. f_{MHz} is UL midband frequency.
§ 20.21(e)(8)(i)(A)(*2*)(*ii*) Mobile booster: $P_{TN,max} \leq -59$.	§ 20.21(e)(9)(i)(A)(*2*)(*ii*) Mobile booster: $P_{TN,max} \leq -59$.
§ 20.21(e)(8)(i)(A)(*2*)(*iii*): Instrumentation, etc. (see rule).	§ 20.21(e)(9)(*i*)(A)(*2*)~~(*ii*)~~(*iii*): Instrumentation, etc. (see rule).
§ 20.21(e)(8)(i)(B) *Bidirectional Capability.* UL and DL gain shall be equivalent; UL $P_{cond} \geq 0.05$ W; One-way boosters prohibited; Block filtering (see rule).	§ 20.21(e)(9)(*i*)(B) *Bidirectional Capability.* UL and DL gain shall be equivalent; UL $P_{cond} \geq 0.05$ W; One-way boosters prohibited; Block filtering (see rule).
§ 20.21(e)(8)(i)(C) *Booster Gain Limits.*	§ 20.21(e)(9)(*i*)(C) *Booster Gain Limits.*
§ 20.21(e)(8)(i)(C)(*1*) UL "variable gain" $G_{UL} \leq (-34-RSSI-MSCL)$ [dB]	§ 20.21(e)(9)(*i*)(C)(*1*) UL and DL "variable gain" $G_{UL}, G_{DL} \leq [BSCL-28-(40-MSCL)]$ [dB]
§ 20.21(e)(8)(i)(C)(*1*)(*i*): RSSI is DL composite received signal power P_{RS} [dBm] at donor port for all operating-band BS.	§ 20.21(e)(9)(*i*)(C)(*1*)(i): BSCL, MSCL definitions (see rule).
§ 20.21(e)(8)(i)(C)(*1*)(*ii*): MSCL definition (see rule).	§ 20.21(e)(9)(*i*)(C)(*1*)(*ii*): BSCL derivation (see rule).

[15] This summary table is for information and quick reference purposes only; parties must use the most recent complete versions of §§ 20.21(e)(8) and 20.21(e)(9) for compliance testing purposes.

§ 20.21(e)(8) ***Wideband Consumer Signal Boosters.***	§ 20.21(e)(9) ***Provider-Specific Consumer Signal Boosters.***
§ 20.21(e)(8)(i)(C)(*2*) UL and DL maximum gain [dB]	§ 20.21(e)(9)(*i*)(C)(*2*) UL and DL maximum gain [dB] § 20.21(e)(9)(i)(C)(*2*)(*i*) Fixed booster $G_{UL,max}$, $G_{DL,max}$ ≤ 19.5+20lg f_{MHz}, or $G_{UL,max}$, $G_{DL,max}$ ≤ 100, for systems with donor/server isolation-measurement based automatic gain adjustment.
§ 20.21(e)(8)(i)(C)(*2*)(*i*) Fixed Booster: $G_{UL,max}$, $G_{DL,max}$ ≤ 6.5+20lg f_{MHz}	
§ 20.21(e)(8)(i)(C)(*2*)(*ii*) f_{MHz} is UL midband frequency.	§ 20.21(e)(9)(i)(C)(*2*)(*ii*) f_{MHz} is UL midband frequency.
§ 20.21(e)(8)(i)(C)(*2*)(*iii*) Mobile Booster: $G_{UL,max}$, $G_{DL,max}$ ≤ 50 dB, inside antenna; ≤ 23 dB, contact coupling; ≤ 15 dB, direct connect.	§ 20.21(e)(9)(i)(C)(*2*)(*iii*) Mobile Booster: $G_{UL,max}$, $G_{DL,max}$ ≤ 50 dB, inside antenna; ≤ 23 dB, contact coupling; ≤ 15 dB, direct connect.
	$G_{UL,max}$, $G_{DL,max}$ ≤ 58 below 1 GHz, $G_{UL,max}$, $G_{DL,max}$ ≤ 65 above 1 GHz, for systems with inside antenna and donor/server isolation-measurement based automatic gain adjustment and auto feedback cancellation.
§ 20.21(e)(8)(i)(D) *Power Limits.* UL P_{cond} ≤ 1 W, and UL EIRP ≤ 1 W. DL P_{cond} ≤ 0.05 W, and DL EIRP ≤ 0.05 W.	§ 20.21(e)(9)(*i*)(D) *Power Limits.* UL P_{cond} ≤ 1 W, and UL EIRP ≤ 1 W. DL P_{cond} ≤ 0.05 W, and DL EIRP ≤ 0.05 W.
	§ 20.21(e)(9)(*i*)(E) *Out of Band Gain Limits.*
	§ 20.21(e)(9)(*i*)(E)(*1*) Ratio(s) of OOB to in-band gains from edge(s) of licensee's blocks shall be:
	§ 20.21(e)(9)(*i*)(E)(*1*)(*i*) −20 dB at band edge(s), § 20.21(e)(9)(*i*)(E)(*1*)(*ii*) −30 dB at 1 MHz offset, § 20.21(e)(9)(*i*)(E)(*1*)(*iii*) −40 dB at 5 MHz offset.
	§ 20.21(e)(9)(*i*)(E)(*2*) OOB gain for devices with licensee's blocks passband midband maximum gain ≥ 80 dB shall be: 60 dB at 0.2 MHz offset, and 45 dB at 1 MHz offset.
§ 20.21(e)(8)(i)(E) *Out of Band Emission Limits.* OOBE ≤ 6 dB below service rule mobile limit; OOBE compliance tested using high PAR signals.	§ 20.21(e)(9)(*i*)(F) *Out of Band Emission Limits.* OOBE ≤ service rule mobile limit; OOBE compliance tested using high PAR signals.
§ 20.21(e)(8)(i)(F) *Intermodulation Limits.* UL and DL IM products ≤ −19 dBm. IM testing per description in rule.	§ 20.21(e)(9)(*i*)(G) *Intermodulation Limits.* UL and DL IM products ≤ −19 dBm. IM testing per description in rule.
§ 20.21(e)(8)(i)(G) *Booster Antenna Kitting.*	§ 20.21(e)(9)(*i*)(H) *Booster Antenna Kitting.*
§ 20.21(e)(8)(i)(H) *Transmit Power Off Mode.* Power-off mode required for devices not meeting noise and gain limits [§ 20.21(e)(8)]. The power-off mode for such devices requires: UL and DL P_{TN} ≤ −70 [dBm/MHz], and G_{UL} and G_{DL} ≤ min{23 dB; MSCL}.	§ 20.21(e)(9)(*i*)(I) *Transmit Power Off Mode.* Power-off mode required for devices not meeting noise and gain limits [§ 20.21(e)(9)]. The power-off mode for such devices requires: UL and DL P_{TN} ≤ −70 [dBm/MHz], and G_{UL} ≤ min{23 dB; MSCL}.

§ 20.21(e)(8) ***Wideband Consumer Signal Boosters.***	§ 20.21(e)(9) ***Provider-Specific Consumer Signal Boosters.***
§ 20.21(e)(8)(i)(I) *Uplink Inactivity.* UL $P_{TN} \leq -70$ [dBm/MHz] after 5 min. without active device connection.	§ 20.21(e)(9)(*i*)(J) *Uplink Inactivity.* UL $P_{TN} \leq -70$ [dBm/MHz] after 5 min. without active device connection.
§ 20.21(e)(8)(ii) *Interference Safeguards.*	§ 20.21(e)(9)(ii) *Interference Safeguards.*
§ 20.21(e)(8)(ii)(A) *Anti-Oscillation.* Detect and mitigate within: 0.3 sec. for UL, 1.0 sec. for DL.	§ 20.21(e)(9)(ii)(A) *Anti-Oscillation.* Detect and mitigate within: 0.3 sec. for UL, 1.0 sec. for DL.
§ 20.21(e)(8)(ii)(B) *Gain Control.*	§ 20.21(e)(9)(ii)(B) *Gain Control.*
§ 20.21(e)(8)(ii)(C) *Interference Avoidance for Wireless Subsystems.*	§ 20.21(e)(9)(ii)(C) *Interference Avoidance for Wireless Subsystems.*

APPENDIX F

FURTHER INFORMATION ON SIGNAL BOOSTER END-USE REGISTRATION

F.1 CONSUMER BOOSTERS

A subscriber must have the consent of a wireless-services provider to operate a Consumer Signal Booster. Subscribers may obtain provider consent in a variety of ways. For example, AT&T, Sprint, T–Mobile, and Verizon Wireless have voluntarily committed to allow their subscribers to use properly certificated Consumer Signal Boosters (i.e., boosters that meet the new rules) on their networks. Also, a signal booster manufacturer could seek authorization for use of a particular booster model on behalf of all subscribers of specific providers. Alternatively, a provider may specify a testing protocol that if satisfied would result in licensee consent to specific booster models. A subscriber may also seek a licensee's express consent to operate a signal booster, e.g., by phone call or e-mail.[R11]

Public Notice DA 16-137 [R28] gives listings of Consumer Boosters that have received FCC certification as of February 2, 2016.

The following selected information about wireless providers' Consumer Booster registration mechanisms supplements the requirements and information given in Sections 20.21, 22.9, 24.9, 27.9, and the FCC Signal Boosters website (http://wireless.fcc.gov/signal-boosters/).

- Sprint Nextel will allow consumers to register their signal boosters by calling their toll-free number. They have already trained their calling center and have designated an engineer to handle inquiries. They may eventually allow consumers to register on their website but they want to gauge how the process works via phone first.

- T-Mobile online registration link: (www.T-Mobile.com/BoosterRegistration); (https://saqat.t-mobile.com/sites/SignalBooster#).

- Verizon's online registration link: (http://www.verizonwireless.com/wcms/consumer/register-signal-booster.html).

- AT&T will allow online registration and will inform OET Lab with the weblink when it is ready.

- U.S.Cellular (http://www.uscellular.com/uscellular/support/fcc-booster-registration.jsp).

F.2 PART 90 CLASS B SIGNAL BOOSTERS

Licensees and signal booster operators are required to register existing Class B signal booster installations with the FCC by November 1, 2014. After November 1, 2014, operation of an existing, unregistered Class B signal booster will be unauthorized and subject to enforcement action. Any new Class B signal booster installed after November 1, 2014 must be registered prior to operation. To encourage compliance with this new requirement, registration will be free of cost to the operator and/or licensee.[R11], [R9]

FCC Part 90 Class B Signal Booster Registration & Discovery website: (https://signalboosters.fcc.gov/signal-boosters/).

APPENDIX G

SELECTED FCC DOCUMENTS AND REFERENCES FOR OTHER BACKGROUND

For KDB publications, the most recent version as published at the time of application submission should be used.

[R1] DA 10-14; Wireless Telecommunications Bureau Seeks Comment On Petitions Regarding The Use Of Signal Boosters And Other Signal Amplification Techniques Used With Wireless Services; WT Docket No. 10-4; Released: January 6, 2010.

[R2] FCC 11-53; Amendment of Parts 1, 2, 22, 24, 27, 90 and 95 of the Commission's Rules to Improve Wireless Coverage Through the Use of Signal Boosters; WT Docket No. 10-4; Notice Of Proposed Rulemaking; Adopted: April 5, 2011; Released: April 6, 2011.

[R3] FCC 13-21; Amendment of Parts 1, 2, 22, 24, 27, 90 and 95 of the Commission's Rules to Improve Wireless Coverage Through the Use of Signal Boosters; WT Docket No. 10-4; Report and Order; Adopted: February 20, 2013; Released: February 20, 2013.

[R4] FCC 13-21, Signal Booster Rules, Final rule, 78 Federal Register 21555-21565, April 11, 2013.

[R5] FCC 13-21, Signal Booster Rules, Correcting amendment, 78 Federal Register 29062, May 17, 2013.

[R6] FCC 13-21, Signal Booster Rules, Announcement of effective date, 78 Federal Register 55648-55649, September 11, 2013.

[R7] An associated FCC Small Entity Compliance Guide about the signal booster rules is available: DA 13-1143, WT Docket No. 10-4, May 17, 2013; (http://www.fcc.gov/encyclopedia/compliance-guides-small-businesses), (http://www.fcc.gov/document/commissions-rules-improve-wireless-coverage).

[R8] DA 13-2389; Wireless Telecommunications Bureau Reminds Signal Booster Manufacturers of March 1, 2014 Equipment Compliance Date; December 13, 2013.

[R9] DA 14-15; Wireless Telecommunications Bureau Announces Availability of Part 90 Class B Signal Booster Registration Tool; January 7, 2014; (https://signalboosters.fcc.gov/signal-boosters/).

[R10] DA 14-177; WT Docket No. 10-4; Order, responding to "Wireless Telecommunications Bureau Seeks Comment on ClearRF Request for Waiver of March 1, 2014 Signal Booster Compliance Deadline," DA 13-2465; Adopted: February 11, 2014; Released: February 11, 2014. [Waives the March 1, 2014, sale and marketing deadline in § 20.21(g), and extends for 60 days (until April 30, 2014) the deadline by which all Consumer Signal Boosters marketed, distributed, or sold in the United States must comply with § 20.21.]

[R11] FCC Signal Boosters (http://wireless.fcc.gov/signal-boosters/);
Consumer Signal Boosters (http://wireless.fcc.gov/signal-boosters/consumer-boosters/);
Industrial Signal Boosters (http://wireless.fcc.gov/signal-boosters/industrial-boosters/);
Part 90 Signal Boosters (http://wireless.fcc.gov/signal-boosters/part-90-boosters/);
FAQ & Resources (http://wireless.fcc.gov/signal-boosters/faq.html).

[R12] KDB Publication 388624 D01 PERMIT BUT ASK PROCEDURE; KDB Publication 388624 D02 PERMIT BUT ASK LIST; (https://apps.fcc.gov/oetcf/kdb/reports/GuidedPublicationList.cfm).

[R13] KDB Publication 996369 D01 Transmitter Module Equipment Authorization Guide; (https://apps.fcc.gov/oetcf/kdb/reports/GuidedPublicationList.cfm).

[R14] KDB Publication 634817 D01 Frequency Range Listings for Certification Grants; KDB Publication 634817 D02 Frequency Range Listings Background; (https://apps.fcc.gov/oetcf/kdb/reports/GuidedPublicationList.cfm).

[R15] KDB Publication 447498 D01 Mobile and Portable Devices RF Exposure Procedures and Equipment Authorization Policies; (https://apps.fcc.gov/oetcf/kdb/rseports/GuidedPublicationList.cfm).

[R16] FCC 14-138; Amendment of Parts 1, 2, 22, 24, 27, 90 and 95 of the Commission's Rules to Improve Wireless Coverage Through the Use of Signal Boosters; WT Docket No. 10-4; Order On Reconsideration And Further Notice Of Proposed Rulemaking; Adopted: September 19, 2014; Released: September 23, 2014; final rule, petition for reconsideration, 79 FR 70790-70796, Nov. 28, 2014; further notice of proposed rulemaking, 79 FR 70837-70838, Nov. 28, 2014; information collection approval, 80 FR 38653-38654, July 7, 2015.

[R17] KDB Publication 662911 D01 Emissions Testing of Transmitters with Multiple Outputs in the Same Band; (https://apps.fcc.gov/oetcf/kdb/reports/GuidedPublicationList.cfm).

[R18] DA 15-61; WIRELESS TELECOMMUNICATIONS BUREAU REMINDS NATIONWIDE WIRELESS SERVICE PROVIDERS OF OBLIGATION TO RELEASE INFORMATION REGARDING CONSUMER SIGNAL BOOSTERS BY MARCH 2, 2015; January 15, 2015.

[R19] DA 15-138; WIRELESS TELECOMMUNICATIONS BUREAU UPDATES LIST OF CONSUMER SIGNAL BOOSTERS; January 30, 2015.

[R20] FCC 13-122; Acceleration of Broadband Deployment by Improving Wireless Facilities Siting Policies; WT Docket No. 13-238; Notice Of Proposed Rulemaking; Adopted: September 26, 2013; Released: September 26, 2013.

[R21] CPRI Specification V5.0 (2011-09-21), Common Public Radio Interface (CPRI); Interface Specification; (http://www.cpri.info/spec.html), also e.g., (http://www.altera.com/technology/high_speed/protocols/cpri/pro-cpri.html).

[R22] ETSI GS ORI 001 V1.1.1 (2011-10), Open Radio equipment Interface (ORI); Requirements for Open Radio equipment Interface (ORI) (Release 1).

[R23] ETSI TR 102 681 V1.1.1 (2009-06), Reconfigurable Radio Systems (RRS); Radio Base Station (RBS) Software Defined Radio (SDR) status, implementations and costs aspects, including future possibilities.

[R24] KDB Publication 602159 Part 15 Repeaters; (http://appsint.fcc.gov/oetcf/kdb/forms/FTSSearchResultPage.cfm?id=28433&switch=P).

[R25] KDB Publication 971168 D01 Measurement Guidance for Certification of Licensed Digital Transmitters; KDB Publication 971168 D02 Miscellaneous and Basic Review and Approval Items for Transmitting Equipment Used In Licensed Radio Services; KDB Publication 971168 D03 Basic Guidance for Intermodulation Product Spurious Emission Testing of Frequency Translating Repeater System Equipment and Similar Devices; (https://apps.fcc.gov/oetcf/kdb/reports/GuidedPublicationList.cfm).

[R26] DA 02-1097; FCC Lab Provides Guidance on Certification of Linear Power Amplifiers Used with Cellular and PCS Transmitters; May 10, 2002.

[R27] DA 16-221; WIRELESS TELECOMMUNICATIONS BUREAU SEEKS COMMENT ON THE CURRENT STATE OF CONSUMER SIGNAL BOOSTERS; February 29, 2016.

[R28] DA 16-137; WIRELESS TELECOMMUNICATIONS BUREAU REMINDS NATIONWIDE WIRELESS SERVICE PROVIDERS OF OBLIGATION TO RELEASE INFORMATION REGARDING CONSUMER SIGNAL BOOSTERS; February 8, 2016.

[R29] ANSI C63.26-2015, *American National Standard for Compliance Testing of Transmitters*.

[R30] FCC 17-93; Amendment of Parts 0, 1, 2, 15 and 18 of the Commission's Rules regarding Authorization of Radiofrequency Equipment; ET Docket No. 15-170; First Report and Order; Adopted: July 13, 2017; Released: July 14, 2017.

[R31] RSS-131, Issue 3, *Zone Enhancers*; Radio Standards Specification; Innovation, Science and Economic Development (ISED) Canada; Spectrum Management and Telecommunications; January 2017.

[R32] DA 13-2409; DISH Network Corporation; Petition for Waiver of Sections 27.5(j) and 27.53(h)(2)(ii) of the Commission's Rules and Request for Extension of Time; WT Docket No. 13-225; Released: December 20, 2013.

[R33] FCC 18-35; Amendment of Parts 1, 2, 22, 24, 27, 90 and 95 of the Commission's Rules to Improve Wireless Coverage Through the Use of Signal Boosters; WT Docket No. 10-4; Second Report and Order; Adopted: March 22, 2018; Released: March 23, 2018.

[R34] FCC 18-35, Improvement of Wireless Coverage Through the Use of Signal Boosters, Final rule, 83 Federal Register 17088-17091, April 18, 2018.

[R35] FCC 18-35, Improvement of Wireless Coverage Through the Use of Signal Boosters, Proposed rule, 83 Federal Register 17131-17137, April 18, 2018.

[R36] DA 15-353; Bird Technologies' Request for Waiver of Section 90.219 Regarding Signal Booster Designation; WT Docket 10-4; March 19, 2015; 30 FCC Rcd 2356-2362; *also* DA 15-133; Wireless Telecommunications Bureau Seeks Comment on Bird Technologies' Request for Waiver of Section 90.219 Regarding Signal Booster Designation; WT Docket 10-4; January 29, 2015; 30 FCC Rcd 761-762.

Change Notice(s)

04/08/2016: 935210 D02 Signal Boosters Certification v03r02 replaces 935210 D02 Signal Boosters Certification v03r01.

- II) d) and V) j) 1) ii) modified to omit PAG provisions.
- Footnote 2 and F.1 updated to cite recent public notices.

10/27/2017: 935210 D02 Signal Boosters Certification v04 replaces 935210 D02 Signal Boosters Certification v03r02.

- Citations added for FCC 17-93 and ANSI C63.26.
- Miscellaneous format/style editorial changes (change from "§" to "Section," etc.).
- Cross-reference updated for docket no. 13-209 (final rules 90.209, 90.210 per FCC 16-48) in V) j) 3).
- Footnote 9 corrected to cross-reference footnote 8 rather than footnote 2 (consistent with earlier version of 935210).
- Footnote b of Table D.1 moved to Table D.3.
- Table D.2 updated to cite DA 13-2409.
- Table D.3 updated.
- PBA (PAG) residual omitted from V) j) 1).
- 900 MHz in V) j) 4) updated
- Alternative label versions added in III) b) (FCC+ ISED) and V) f) (part 90 + part 20).
- Cross-reference changed from 2.911(b) to 2.911(c) (per FCC 14-208).

06/19/2018: 935210 D02 Signal Boosters Certification v04r01 replaces 935210 D02 Signal Boosters Certification v04.

- Updates at III) h), III) i) 3), and A.2.1 for removing provider-specific consumer boosters personal-use requirement per Order FCC 18-35.
- Minor wording adjustments in V) f), and new V) l) added; for clarifying Part 90 Class A and Class B device applications, including referencing DA 15-353 in Appendix G.
- Wording adjusted in V) j) 2), for clarifying 800 MHz Band applications.
- V) j) 6) added, cross-referencing to KDB Pub. 971168 D02 for 700 MHz Band PS application basic requirements.
- C.2) a) 3) added clarifying that KDB Pub. 935210 D05 generally applies for any ERFPA devices.
- 600 MHz band row added in Table D.2.
- Cross-reference corrected from 634817 D02 to 971168 D02 in BRS/EBS row of Table D.2.
- B9B listed in right column of Table D.3 at FirstNet band rows.
- Reference corrected from 670583 to 971168 in Appendix G.