ACCESS SERVICE

Regulations, Rates and Charges
applying to the provision of Access Services
within a Local Access and Transport Area (LATA) or
equivalent Market Area for connection to interstate
communications facilities for Interstate Customers within
the operating territories of the Issuing Carrier listed
on the top left of each page and the Concurring Carriers
listed on page 25.

Access Services are provided by means of wire, fiber optics, radio or any other suitable technology or a combination thereof.

The title and street address of this tariff's Issuing Officer are located on the bottom of each tariff page.

*This entire Tariff cancels the Aliant Midwest, Inc. F.C.C. No. 1 in it’s entirety.

(TR01)

ACCESS SERVICE
CHECK SHEET

Title Page 1 and Pages 1 to 404 inclusive of this tariff are effective as of the date shown.

Page	Number of Revision Except as Indicated
1*	**2nd Revised**
264*	1st Revised
270*	1st Revised
405*	**1st Revised**
406*	**1st Revised**
407*	**1st Revised**
408*	**1st Revised**
409*	**1st Revised**
410*	**1st Revised**
411*	**1st Revised**
412*	**1st Revised**

(TR03)

ACCESS SERVICE

TABLE OF CONTENTS

ACCESS SERVICE

TABLE OF CONTENTS (Cont'd)

ACCESS SERVICE

TABLE OF CONTENTS (Cont'd)

ACCESS SERVICE

TABLE OF CONTENTS (Cont'd) Page No.

2. GENERAL REGULATIONS (Cont'd)

2.6 Definitions (Cont'd)

ACCESS SERVICE

TABLE OF CONTENTS (Cont'd) Page No.

2. GENERAL REGULATIONS (Cont'd)

2.6 Definitions (Cont'd)

ACCESS SERVICE

TABLE OF CONTENTS (Cont'd) Page No.

2. GENERAL REGULATIONS (Cont'd)

2.6 Definitions (Cont'd)

ACCESS SERVICE

TABLE OF CONTENTS (Cont'd) Page No.

TABLE OF CONTENTS (Cont'd)

ACCESS SERVICE

TABLE OF CONTENTS (Cont'd)

ACCESS SERVICE

TABLE OF CONTENTS (Cont'd)

ACCESS SERVICE

TABLE OF CONTENTS (Cont'd)

ACCESS SERVICE

TABLE OF CONTENTS (Cont'd)

TABLE OF CONTENTS (Cont'd)

ACCESS SERVICE

TABLE OF CONTENTS (Cont'd) Page No.

ACCESS SERVICE

TABLE OF CONTENTS (Cont'd) Page No.

ACCESS SERVICE

TARIFF INFORMATION AND USE

GENERAL

- This tariff contains rates and regulations applicable to Access Services.

Tariff Page Format

- Page Numbering. Page numbers are located in the upper right corner of each tariff page. Pages are numbered sequentially. When a new page must be added between existing pages, a decimal and number is added to the previous page number, to sequentially number the new page. For example a new page between existing pages 20 and 21 would be numbered 20.1. A new page added between pages 18.1 and 18.2 would be numbered 18.1.1.

- Page Revision Numbering. Page Revision Numbers are located in the upper right corner of each tariff page. This number is the most recent page revision on file with the FCC. Due to Notice Periods, and changed Effective Dates, the most recent page on file with the FCC may not be in effect. Consult the Effective Date on a specific page and Tariff Supplements to determine if that page is in effect (see Tariff Supplements following).

- Issue Date. The Issue Date in the lower left corner of each tariff page is the date that page was filed with the FCC.

- Effective Date. The Effective Date in the lower right corner is the date the page is scheduled to go into effect (at 12:01 AM on that date). This date may be changed by either reissuing the page, or by issuing a tariff supplement to change the effective date without reissuing the page. A Tariff Supplement is usually used when many tariff pages are involved to avoid the necessity to reprint and reissue many pages solely to change the effective date.

ACCESS SERVICE

TARIFF INFORMATION AND USE

GENERAL (Cont'd)

Tariff Section Numbering

- An alpha-numeric numbering plan is used to number tariff regulations and rates. Each level is subordinate to and dependent on its next higher level. An example of the numbering sequence follows:

6
6.2
6.2.1
6.2.1(B)
6.2.1(B)(2)
6.2.1(B)(2)(a)

Tariff Revision Coding

- Revisions to this tariff are coded through the use of symbols. These symbols appear in the right margin of the page. The symbols and their meanings are:

N - to signify new rate or regulation.
R - to signify reduction to a rate or charge.
I - to signify increase to a rate or charge.
D - to signify discontinued rate or regulation.
C - to signify changed regulation.
T - to signify a change in text but no change in rate or regulation.
S - to signify matter reissued without change.
M - to signify matter relocated without change.
Z - to signify a correction.

- Other marginal codes are used to direct the reader to a footnote for specific information. Codes used for this purpose are lower case letters of the alphabet, e.g., x, y and z. These codes may appear beside the page revision number or in the right margin opposite specific text.

ACCESS SERVICE

TARIFF INFORMATION AND USE

TARIFF STRUCTURE AND ORGANIZATION

Tariff Supplements

- A Supplement may be filed with the FCC to cancel or suspend a tariff, or under Special Authority, to change the effective date of tariff pages or tariff material without reissuing or refiling the affected tariff pages.

- A Supplement will briefly describe the action taken (e.g., suspension, deferral, effective date change, etc.) as well as indicate what tariff material, sections or pages are affected.

- The Supplements in effect are listed by number on the first Check Sheet, in the text at the top of that Check Sheet. When a Supplement is no longer needed, it will be deleted from the Check Sheet.

- It is recommended that Supplements be placed in the front of the tariff, preceding the Title Page.

Title Page (Page 1)

- Title Page 1 provides information regarding the FCC number of the tariff, the class of service provided, the geographical application of the tariff, and the type of facilities used to provide service. This page also provides information related to the origination of the tariff.

Check Sheet (Page 1)

- When new or revised tariff pages are filed with the FCC, revised and updated Check Sheets are also filed with the FCC.

- The Check Sheets list all pages in the tariff as well as the most recent revision number of each page. When pages are changed, or added, the Check Sheets are changed to reflect the change or addition. An asterisk (*) is placed next to revised or added pages to highlight the pages changed.

- The Check Sheets list the most recent page revision filed with the FCC. It does not indicate that the latest revision is effective. The effective date on the page itself and Tariff Supplements must be examined to determine page effectiveness.

ACCESS SERVICE

TARIFF INFORMATION AND USE

TARIFF STRUCTURE AND ORGANIZATION (Cont'd)

Table of Contents (Pages 2 through 16)

- The Table of Contents lists the Sections and paragraphs of the Tariff and provides a page number at which that Section or paragraph begins.

Other Carriers (Page 22)

- In addition to the Issuing Carrier, all Concurring Carriers are listed in the tariff.

Symbols and Abbreviations (Page 23 through 25)

- A listing and explanation of tariff coding symbols and abbreviations used in the tariff is provided.

Technical Publications (Pages 25 through 27)

- The status and availability of technical publications required for the provision of Access Service is provided.

Section 1 - Application of Tariff

- States the application and scope of the Access Service tariff.

Section 2 - General Regulations

- States the general regulations that apply to the access services offered by this tariff.

ACCESS SERVICE

TARIFF INFORMATION AND USE

TARIFF STRUCTURE AND ORGANIZATION (Cont'd)

Section 3 - Carrier Common Line Access Service

Section 5 - Ordering Options

- States the rates and regulations for the Ordering Options available for the ordering of switched and special access services.

Section 6, 7, 8, and 9

- State the specific rates and regulations for the following Access Services:

  6 - Switched Access Service
  7 - Special Access Service
  8 - Specialized Service or Arrangements
  9 - Additional Engineering, Additional Labor and Miscellaneous Services

Section 10 - Technical Specifications

- Provides the technical specifications and service parameters of Access Services.

ACCESS SERVICE

CONCURRING CARRIERS

No Concurring Carriers

CONNECTING CARRIERS

NO CONNECTING CARRIERS

OTHER PARTICIPATING CARRIERS

NO OTHER PARTICIPATING CARRIERS

REGISTERED SERVICE MARKS	REGISTERED TRADEMARKS
NONE	NONE

ACCESS SERVICE

EXPLANATION OF SYMBOLS

(C) - To signify changed regulation
(D) - To signify discontinued rate or regulation
(I) - To signify increase
(M) - To signify matter relocated without change
(N) - To signify new rate or regulation
(R) - To signify reduction
(S) - To signify reissued matter
(T) - To signify a change in text but no change in rate or regulation
(Z) - To signify a correction

EXPLANATION OF ABBREVIATIONS

ac	-	Alternating current
AML	-	Actual Measured Loss
ANI	-	Automatic Number Identification
AP	-	Program Audio
ATSP	-	Alternate Tandem Switching Provider
AT&T	-	American Telephone and Telegraph Company
BD	-	Business Day
BHMC	-	Busy Hour Minutes of Capacity
CAP	-	Competitive Access Provider
CCS	-	Common Channel Signaling
CCSNC	-	Common Channel Signaling Network Connection
CI	-	Changes Interface
CIC	-	Carrier Identification Code
CNP	-	Charge Number Parameter
CO	-	Central Office
COCTX	-	Central Office Centrex
Cont'd	-	Continued
COR	-	Customer of Record
CPE	-	Customer Provided Equipment
CPN	-	Calling Party Number
CSP	-	Carrier Selection Parameter
Ctx	-	Centrex
DA	-	Directory Assistance
dB	-	decibel
dBrnC	-	Decibel Reference Noise C-Message Weighting
dBrnCO	-	Decibel Reference Noise C-Message Weighted 0
dBv	-	Decibel(s) Relative to 1 Volt (Reference)
dBvl	-	Decibel(s) Relating to 1 Volt (Reference)
dc	-	direct current
DDD	-	Direct Distance Dialing
DSL		Digital Subscriber Line
EDD	-	Envelope Delay Distortion
ELEPL	-	Equal Level Echo Path Loss
EML	-	Expected Measured Loss
EPL	-	Echo Path Loss
ERL	-	Echo Return Loss
ESS	-	Electronic Switching System
ESSX	-	Electronic Switching System Exchange

ACCESS SERVICE

EXPLANATION OF ABBREVIATIONS (Cont'd)

f	-	frequency
F.C.C.	-	Federal Communications Commission
FID	-	Field Identifier
HC	-	High Capacity
Hz	-	Hertz
IC	-	Interexchange Carrier
ICB	-	Individual Case Basis
ICL	-	Inserted Connection Loss
kbps	-	kilobits per second
kHz	-	kilohertz
LATA	-	Local Access and Transport Area
Ma	-	milliamperes
Mbps	-	Megabits per second
MF	-	Multifrequency Address Signaling
MHz	-	Megahertz
MRC	-	Monthly Recurring Charge
MT	-	Metalic
MTS	-	Message Telecommunications Service(s)
NPA	-	Numbering Plan Area
NRC	-	Nonrecurring Charge
NTS	-	Non-Traffic Sensitive
NXX	-	Three-Digit Central Office Code
OTPL	-	Zero Transmission Level Point
PBX	-	Private Branch Exchange
PCM	-	Pulse Code Modulation
PICC	-	Presubscribed Interexchange Charge
PLR	-	Private Line Ringdown
POT	-	Point of Termination
rms	-	root-mean-square
RSM	-	Remote Switching Modules
RSS	-	Remote Switching Systems
SAC	-	Service Access Code
SNAL	-	Signaling Network Access Line
SP	-	Signaling Point
SPOI	-	Signaling Point of Interface
SRL	-	Singing Return Loss
SSN	-	Switched Service Network
SSP	-	Service Switching Point
SS7	-	Signaling System 7
STP	-	Signal Transfer Point
SWC	-	Serving Wire Center
TES	-	Telephone Exchange Service(s)
TG	-	Telegraph Grade
TLP	-	Transmission Level Point
TSPS	-	Traffic Service Position System
TV	-	Television

ACCESS SERVICE

EXPLANATION OF ABBREVIATIONS (Cont'd)

USOC	-	Uniform Service Order Code
VG	-	Voice Grade
V & H	-	Vertical & Horizontal
WATS	-	Wide Area Telecommunications Service(s)
WD	-	Wideband Digital

REFERENCE TO OTHER TARIFFS

Whenever reference is made in this tariff to other tariffs of the Telephone Company, the reference is to the tariffs in force as of the effective date of this tariff, and to amendments thereto and successive issues thereof.

The following tariffs are referenced in this tariff and may be obtained from the Federal Communications Commission's commercial contractor.

NATIONAL EXCHANGE CARRIER ASSOCIATION, INC.
ACCESS SERVICE
TARIFF F.C.C. NO. 5

NATIONAL EXCHANGE CARRIER ASSOCIATION, INC.
WIRE CENTER AND INTERCONNECTION INFORMATION
TARIFF F.C.C. NO. 4

REFERENCE TO TECHNICAL PUBLICATIONS

The following technical publications are referenced in this tariff and may be obtained from Bell Communications Research, Inc., Distribution Storage Center, 60 New England Ave., Piscataway, NJ 08854.

Technical Reference:

Bellcore Practice BR 010-200-010 CRIS Exchange Message Record
Issued: October 13, 2006

Multiple Exchange Carrier Access Billing (MECAB) Guidelines
Issued: June, 1994

Multiple Exchange Carrier Ordering and Design (MECOD) Guidelines
Issued: May, 1994

ACCESS SERVICE

REFERENCE TO TECHNICAL PUBLICATIONS (Cont'd)

PUB 41451 High Capacity Terrestrial Digital Service
Issued: October 13, 2006 Available: May 17, 1983

PUB 41004 Data Communications Using Voiceband Private Line Channels
Issued: October, 1973 Available: October, 1973

TR-62310 Digital Data System Channel Interface Specification
Issued: November, 1987 Available: January, 1988

PUB 62411 High Capacity Digital Service Channel Interface Specification
Issued: September, 1983 Available: October, 1983

TR-NPL-000054 High Capacity Digital Service (1.544 Mbs) Interface Generic Requirements for End Users
Issued: April 1989

TR-NPL-000334 Voice Grade Switched Access Service
Issued: June, 1986

TR-NPL-000335 Voice Grade Special Access Service
Issued: June, 1986

TR-NPL-000336 Metallic and Telegraph Grade Special Access Service
Issued: October, 1987

TR-NPL-000337 Program Audio Special Access and Local Channel Services
Issued: July, 1987

TR-NPL-000338 Television Special Access and Local Channel Services
Issued: December, 1986

PUB 62507 Digital Data Special Access Service
Issued: December, 1983 Available: March 15, 1984

PUB 62508 High Capacity Digital Special Access Service
Issued: December, 1983 Available: January, 1984

TR-NWT-000063 Network Equipment Building System (NEBS) Generic Equipment Requirements
Issued: July, 1991

TR-TSV-000905 Common Channel Signaling Network Interface Specification Supplement 1 Available: August 1989

ACCESS SERVICE

REFERENCE TO TECHNICAL PUBLICATIONS (Cont'd)

The following technical publication is referenced in this tariff and may be obtained from the Bell Communications Technical Education Center, Room B02, 6200 Route 53, Lisle, IL 60532.

Telecommunications Transmission Engineering
Volume 3 - Networks and Services (Chapter 6 and 7)
Second Edition, 1980
Issued: October 13, 2006 Available: June, 1980

The following Technical Publication is referenced in this tariff and may be obtained from the National Exchange Carrier Association, Inc., Director - Tariff and Regulatory Matters, 100 So. Jefferson Road, Whippany, NJ 07981 and the Federal Communications Commission's commercial contractor.

PUB AS No. 1, Issue II Access Service
Issued: May, 1984 Available: May, 1984

The following technical publications are referenced in this tariff and may be obtained from the Government Printing Office, Superintendent of Documents, Document Control Branch, 940 No. Capital Street NE, Washington DC 20401.

(1) Telecommunication Service Priority (TSP) system for National Security Emergency Preparedness (NSEP) Service Handbook.

(2) National Communications System (NCS) Handbook 3-12, issued July 11, 1989, available August 1990.

The following publication is referenced in this tariff and may be obtained from Director-Sales Operations. Integrated Network Corporation, P.O. Box 6875, Bridgewater, N.J. 08807.

Integrated Network Corporation
Document CB-INC-100
Available: June, 1990

The following publication is referenced in this tariff and may be obtained from AT&T, 26 Parsippany Road, Whippany, N.J. 07981.

AT&T PUB 62310
(and its Addendum 2 and Addendum 3)
Available: October, 1989

ACCESS SERVICE

1. Application of Tariff

1.1 This tariff contains, or refers to other documents which contain, regulations, rates and charges applicable to the provision of Carrier Common Line, End User Access, Switched Access and Special Access Services, Lifeline Assistance and Universal Service Fund, and other miscellaneous services, hereinafter referred to collectively as service(s), provided by the Issuing and Concurring Carriers of this tariff, hereinafter referred to as the Telephone Company, to customers.

Pursuant to the Commission's Rules at Section 69.4(c), 69.5(d), 69.104(1), 69.116, 69.117, 69.603(c), and 69.603(d), regulations concerning administration and billing of Lifeline Assistance and Universal Service Fund, rates and charges for these carrier's carrier elements are contained in Section 8 of the National Exchange Carrier Association, Inc., Tariff F.C.C. No. 5. The National Exchange Carrier Association, Inc., will bill and collect all Lifeline Assistance and Universal Service Fund charges on behalf of the Telephone Company.

1.2 The provision of such services by the Telephone Company as set forth in this tariff does not constitute a joint undertaking with the customer for the furnishing of any service.

ACCESS SERVICE

2. General Regulations

2.1 Undertaking of the Telephone Company

2.1.1 Scope

(A) The Telephone Company does not undertake to transmit messages under this tariff.

(B) The Telephone Company shall be responsible only for the installation, operation and maintenance of the services it provides.

(C) The Telephone Company will, for maintenance purposes, test its services only to the extent necessary to detect and/or clear troubles.

(D) Services are provided 24 hours daily, seven days per week, except as set forth in other applicable sections of this tariff.

(E) The Telephone Company does not warrant that its facilities and services meet standards other than those set forth in this tariff.

2.1.2 Limitations

(A) The customer may not assign or transfer the use of services provided under this tariff; however, where there is no interruption of use or relocation of the services, such assignment or transfer may be made to:

(1) another customer, whether an individual, partnership, association or corporation, provided the assignee or transferee assumes all outstanding indebtedness for such services, and the unexpired portion of the minimum period and the termination liability applicable to such services, if any; or

ACCESS SERVICE

2. General Regulations (Cont'd)

2.1 Undertaking of the Telephone Company (Cont'd)

2.1.2 Limitations (Cont'd)

(A) (Cont'd)

(2) a court-appointed receiver, trustee or other person acting pursuant to law in bankruptcy, receivership, reorganization, insolvency, liquidation or other similar proceedings, provided the assignee or transferee assumes the unexpired portion of the minimum period and the termination liability applicable to such services, if any.

In all cases of assignment or transfer, the written acknowledgment of the Telephone Company is required prior to such assignment or transfer which acknowledgement shall be made within 15 days from the receipt of notification. All regulations and conditions contained in this tariff shall apply to such assignee or transferee.

The assignment or transfer of services does not relieve or discharge the assignor or transferor from remaining jointly or severally liable with the assignee or transferee for any obligations existing at the time of the assignment or transfer.

(B) The provisioning, use, and restoration of services shall be in accordance with Part 64, Subpart D, paragraph 64.401 of the Federal Communications Commission's Rules and Regulations, which specifies the priority system for such activities.

(C) Subject to compliance with the rules mentioned in (B) preceding, the services offered herein will be provided to customers on a first-come, first-served basis.

ACCESS SERVICE

2. General Regulations (Cont'd)

2.1 Undertaking of the Telephone Company (Cont'd)

2.1.2 Limitations (Cont'd)

(C) Cont'd)

First-come first-served shall be based upon the received time and date stamped by the Telephone Company on customer orders which contain the information as required for each respective service as delineated in other sections of this tariff. Customer orders shall not be deemed to have been received until such information is provided. Should questions arise which preclude order issuance due to missing information or the need for clarification, the Telephone Company will attempt to seek such missing information or clarification on a verbal basis.

2.1.3 Liability

(A) The Telephone Company's liability, if any, for its willful misconduct is not limited by this tariff. With respect to any other claim or suit, by a customer or by any others, for damages associated with the installation, provision, termination, maintenance, repair or restoration of service, and subject to the provisions of (B) through (H) following, the Telephone Company's liability, if any, shall not exceed an amount equal to the proportionate charge for the service for the period during which the service was affected. This liability for damages shall be in addition to any amounts that may otherwise be due the customer under this tariff as a Credit Allowance for a Service Interruption.

(B) The Telephone Company shall not be liable for any act or omission of any other carrier or customer providing a portion of a service, nor shall the Telephone Company for its own act or omission hold liable any other carrier or customer providing a portion of a service.

(C) The Telephone Company is not liable for damages to the customer premises resulting from the furnishing of a service, including the installation and removal of equipment and associated wiring, unless the damage is caused by the Telephone Company's negligence.

ACCESS SERVICE

2. General Regulations (Cont'd)

2.1 Undertaking of the Telephone Company (Cont'd)

2.1.3 Liability (Cont'd)

(D) The Telephone Company shall be indemnified, defended and held harmless by the end user against any claim, loss or damage arising from the end user's use of services offered under this tariff, involving:

(1) Claims for libel, slander, invasion of privacy, or infringement of copyright arising from the end user's own communications;

(2) Claims for patent infringement arising from the end user's acts combining or using the service furnished by the Telephone Company in connection with facilities or equipment furnished by the end users or customer or;

(3) All other claims arising out of any act or omission of the end user in the course of using services provided pursuant to this tariff.

(E) The Telephone Company shall be indemnified, defended and held harmless by the customer against any claim, loss or damage arising from the customer's use of services offered under this tariff involving;

(1) Claims for libel, slander, invasion of privacy, or infringement of copyright arising from the customer's own communications;

(2) Claims for patent infringement arising from the customer's acts combining or using the service furnished by the Telephone Company in connection with facilities or equipment furnished by the end user or customer or;

ACCESS SERVICE

2. General Regulations (Cont'd)

2.1 Undertaking of the Telephone Company (Cont'd)

2.1.3 Liability (Cont'd)

(E) (Cont'd)

(3) All other claims arising out of any act or omission of the customer in the course of using services provided pursuant to this tariff.

(F) The Telephone Company does not guarantee or make any warranty with respect to its services when used in an explosive atmosphere. The Telephone Company shall be indemnified, defended and held harmless by the customer from any and all claims by any person relating to such customer's use of services so provided.

(G) No license under patents (other than the limited license to use) is granted by the Telephone Company or shall be implied or arise by estoppel, with respect to any service offered under this tariff. The Telephone Company will defend the customer against claims of patent infringement arising solely from the use by the customer of services offered under this tariff and will indemnify such customer for any damages awarded based solely on such claims.

(H) The Telephone Company's failure to provide or maintain services under this tariff shall be excused by labor difficulties, governmental orders, civil commotions, criminal actions taken against the Telephone Company, acts of God and other circumstances beyond the Telephone Company's reasonable control, subject to the Credit Allowance for a Service Interruption as set forth in 2.4.4 following.

ACCESS SERVICE

2. General Regulations (Cont'd)

2.1 Undertaking of the Telephone Company (Cont'd)

2.1.4 Provision of Services

The Telephone Company, to the extent that such services are or can be made available with reasonable effort, and after provision has been made for NSEP Services and the Telephone Company's telephone exchange services, will provide to the customer upon reasonable notice services offered in other applicable sections of this tariff at rates and charges specified therein.

ACCESS SERVICE

2. General Regulations (Cont'd)

2.1 Undertaking of the Telephone Company (Cont'd)

2.1.5 Installation and Termination of Services Other Than Interconnection

The services provided under this tariff (A) will include any entrance cable or drop wiring to that point where provision is made for termination of the Telephone Company's outside distribution network facilities at a mutually acceptable suitable location at a mutually agreeable customer-designated premises and (B) will be installed by the Telephone Company to such point of termination. Each Access Service has only one point of termination per customer premises. Any additional terminations beyond such point of termination are the sole responsibility of the customer. Moves of the point of termination at the customer's premises will be as set forth in 6.7.2 and 7.2.3 following.

For single unit premises the point of termination shall be a point within twelve inches of the protector or, where there is no protector, within twelve inches of where the telephone wire enters the customer's premises.

For multiunit premises existing as of August 13, 1990, the point of termination shall be determined in accordance with the Company's reasonable and nondiscriminatory standard operating practices. Where there are multiple points of termination within the multiunit premises, the point of termination for a customer shall not be further inside the customer's premises than a point twelve inches from where the wiring enters the customer's premises.

ACCESS SERVICE

2. General Regulations (Cont'd)

2.1 Undertaking of the Telephone Company (Cont'd)

2.1.5 Installation and Termination of Services Other Than Interconnection (Cont'd)

For multiunit premises in which wiring is installed after August 13, 1990, including additions, modifications and rearrangements of wiring existing prior to that date, the point of termination shall be placed at the minimum point of entry as determined in accordance with the Company's reasonable and nondiscriminatory standard operating practices. The minimum point of entry shall be either the closest practicable point to where the wiring crosses a property line or the closest practicable point to where the wiring enters the multiunit building or buildings. If the Company did not elect to place the point of termination at the minimum point of entry, the multiunit premises owner shall determine the location of the point or points of termination. The multiunit premises owner shall determine whether there shall be a single point of termination for all customers or separate such locations for each customer, provided however, that where there are multiple points of termination within the multiunit premises, the point of termination for a customer shall not be further inside the customer's premises than a point twelve inches from where the wiring enters the customer's premises.

ACCESS SERVICE

2. General Regulations (Cont'd)

2.1 Undertaking of the Telephone Company (Cont'd)

2.1.6 Maintenance of Services

The services provided under this tariff shall be maintained by the Telephone Company. The customer or others may not rearrange, move, disconnect, remove or attempt to repair any facilities provided by the Telephone Company, other than by connection or disconnection to any interface means used, except with the written consent of the Telephone Company.

ACCESS SERVICE

2. General Regulations (Cont'd)

2.1 Undertaking of the Telephone Company (Cont'd)

2.1.7 Changes and Substitutions

Except as provided for equipment and systems subject to FCC Part 68 Regulations at 47 C.F.R. Section 68.110(b), the Telephone Company may, where such action is reasonably required in the operation of its business, (A) substitute, change or rearrange any facilities used providing service under this tariff, including but not limited to, (1) substitution of different metallic facilities, (2) substitution of carrier or derived facilities for metallic facilities used to provide other than metallic facilities and (3) substitution of metallic facilities for carrier or derived facilities used to provide other than metallic facilities, (B) change minimum protection criteria, (C) change operating or maintenance characteristics of facilities or (D) change operations or procedures of the Telephone Company. In case of any such substitution, change or rearrangement, the transmission parameters will be within the range as set forth in 6. and 7. following. The Telephone Company shall not be responsible if any such substitution, change or rearrangement renders any customer furnished services obsolete or requires modification or alteration thereof or otherwise affects their use or performance. If such substitution, change or rearrangement materially affects the operating characteristics of the facility, the Telephone Company will provide reasonable notification to the customer in writing. Reasonable time will be allowed for any redesign and implementation required by the change in operating characteristics. The Telephone Company will work cooperatively with the customer to determine reasonable notification procedures.

ACCESS SERVICE

2. General Regulations (Cont'd)

2.1 Undertaking of the Telephone Company (Cont'd)

2.1.8 Refusal and Discontinuance of Service

(A) Unless the provisions of 2.2.1(B) or 2.5 following apply, if a customer fails to comply with 2.1.6 preceding or 2.2.2, 2.3.1, 2.3.4, 2.3.5 or 2.4 following, including any payments to be made by it on the dates and times herein specified, the Telephone Company may, on thirty (30) days written notice by Certified U.S. Mail to the person designated by that customer to receive such notices of noncompliance, refuse additional applications for service and/or refuse to complete any pending orders for service by the non-complying customer at any time thereafter.

ACCESS SERVICE

2. General Regulations (Cont'd)

2.1 Undertaking of the Telephone Company (Cont'd)

2.1.8 Refusal and Discontinuance of Service (Cont'd)

(A) (Cont'd)

If the Telephone Company does not refuse additional applications for service on the date specified in the thirty (30) days notice, and the customer's noncompliance continues, nothing contained herein shall preclude the Telephone Company's right to refuse additional applications for service to the non-complying customer without further notice.

(B) Unless the provisions of 2.2.1(B) or 2.5 following apply, if a customer fails to comply with 2.1.6 preceding or 2.2.2, 2.3.1, 2.3.4, 2.3.5 or 2.4 following, including any payments to be made by it on the dates and times herein specified, the Telephone Company may, on thirty (30) days written notice by Certified U.S. Mail to the person designated by that customer to receive such notices of noncompliance, discontinue the provision of the services to the non-complying customer at any time thereafter. In the case of such discontinuance, all applicable charges, including termination charges shall become due. If the Telephone Company does not discontinue the provision of the services involved on the date specified in the thirty (30) days notice, and the customer's noncompliance continues, nothing contained herein shall preclude the Telephone Company's right to discontinue the provision of the services to the non-complying customer without further notice.

ACCESS SERVICE

2. General Regulations (Cont'd)

2.1 Undertaking of the Telephone Company (Cont'd)

2.1.8 Refusal and Discontinuance of Service (Cont'd)

(C) If the National Exchange Carrier Association, Inc., notifies the Telephone Company that the Customer has failed to comply with Section 8 of the National Exchange Carrier Association, Inc., Tariff F.C.C. No. 5 (Lifeline Assistance and Universal Service Fund charges) including any Customer's failure to make payments on the date and times specified therein, the Telephone Company, may, on thirty days' written notice to the Customer by Certified U.S. Mail, take any of the following actions: - (1) refuse additional applications for service and/or (2) refuse to complete any pending orders for service, (3) discontinue the provision of service to the Customer. In the case of discontinuance, all applicable charges including termination charges, shall become due.

(D) When access service is provided by more than one Telephone Company, the companies involved in providing the joint service may individually or collectively deny service to a customer for nonpayment. Where the Telephone Company(s) affected by the nonpayment is incapable of effecting discontinuance of service without cooperation from the other joint providers of Switched Access Service, such other Telephone Company(s) will, if technically feasible, assist in denying the joint service to the customer. Service denial for such joint service will only include calls originating or terminating within, or transiting, the operating territory of the Telephone Companies initiating the service denial for nonpayment. When more than one of the joint providers must deny service to effectuate termination for nonpayment, in cases where a conflict exists in the applicable tariff provisions, the tariff regulations of the end office Telephone Company shall apply for joint service discontinuance.

ACCESS SERVICE

2. General Regulations (Cont'd)

2.1 Undertaking of the Telephone Company (Cont'd)

2.1.9 Limitation of Use of Metallic Facilities

Signals applied to a metallic facility shall conform to the limitations set forth in Technical Reference Publication AS No. 1. In the case of application of dc telegraph signaling systems, the customer shall be responsible, at its expense, for the provision of current limiting devices to protect the Telephone Company facilities from excessive current due to abnormal conditions and for the provision of noise mitigation networks when required to reduce excessive noise.

2.1.10 Notification of Service-Affecting Activities

The Telephone Company will provide the customer reasonable notification of service-affecting activities that may occur in normal operation of its business. Such activities may include, but are not limited to, equipment or facilities additions, removals or rearrangements, routine preventative maintenance and major switching machine change-out. Generally, such activities are not individual customer service specific, they affect many customer services. No specific advance notification period is applicable to all service activities. The Telephone Company will work cooperatively with the customer to determine the notification requirements.

2.1.11 Coordination with Respect to Network Contingencies

The Telephone Company intends to work cooperatively with the customer to develop network contingency plans in order to maintain maximum network capability following natural or man-made disasters which affect telecommunications services. All contingency plans will be in accordance with 2.1.2(B) preceding.

2.1.12 Provision and Ownership of Telephone Numbers

The Telephone Company reserves the reasonable right to assign, designate or change telephone numbers, any other call number designations associated with Access Services, or the Telephone Company serving central office prefixes associated with such numbers, when necessary in the conduct of its business.

ACCESS SERVICE

2. General Regulations (Cont'd)

2.1 Undertaking of the Telephone Company (Cont'd)

2.1.13 Preemption of Service

In certain instances, i.e., no spare services are available, it may be necessary to preempt existing services to provision or restore NSEP Services. If, in its best judgement, the Telephone Company deems it necessary to preempt, then the Telephone Company will ensure that:

(A) A sufficient number of public switched services are available for public use if preemption of such services is necessary to provision NSEP TSP Service.

(B) The services preempted have a lower or no assigned TSP priority.

(C) A reasonable effort is made to notify the preempted service customer of the action to be taken.

(D) A credit allowance for any preempted service shall be made in accordance with the provisions set forth in Section 2.4.4(A).

2.2 Use

2.2.1 Interference or Impairment

(A) The characteristics and methods of operation of any circuits, facilities or equipment provided by other than the Telephone Company and associated with the facilities utilized to provide services under this tariff shall not interfere with or impair service over any facilities of the Telephone Company, its affiliated companies, or its connecting and concurring carriers involved in its services, cause damage to their plant, impair the privacy of any communications carried over their facilities or create hazards to the employees of any of them or the public.

ACCESS SERVICE

2. General Regulations (Cont'd)

2.2 Use (Cont'd)

2.2.1 Interference or Impairment (Cont'd)

(B) Except as provided for equipment or systems subject to the FCC Part 68 Rules in 47 C.F.R. Section 68.108, if such characteristics or methods of operation are not in accordance with (A) preceding, the Telephone Company will, where practicable, notify the customer that temporary discontinuance of the use of a service may be required; however, where prior notice is not practicable, nothing contained herein shall be deemed to preclude the Telephone Company's right to temporarily discontinue forthwith the use of a service if such action is reasonable under the circumstances. In case of such temporary discontinuance, the customer will be promptly notified and afforded the opportunity to correct the condition which gave rise to the temporary discontinuance. During such period of temporary discontinuance, credit allowance for service interruptions as set forth in 2.4.4 following is not applicable.

2.2.2 Unlawful and Abusive Use

(A) The service provided under this tariff shall not be used for an unlawful purpose or used in an abusive manner.

Abusive use includes:

(1) The use of the service of the Telephone Company for a call or calls, anonymous or otherwise, in a manner reasonably expected to frighten, abuse, torment, or harass another;

(2) The use of the service in such a manner as to interfere unreasonably with the use of the service by one or more other customers.

ACCESS SERVICE

2. General Regulations (Cont'd)

2.2 Use (Cont'd)

2.2.2 Unlawful and Abuse Use (Cont'd)

(B) The Telephone Company may, upon written request from a customer, or another exchange carrier, terminate service to any subscriber or customer identified as having utilized service provided under this tariff in the completion of abusive or unlawful telephone calls. Service shall be terminated by the Telephone Company as provided for in its general and/or local exchange service tariffs.

(C) In such instances when termination occurs, as in (B) preceding, the Telephone Company shall be indemnified, defended and held harmless by any customer or Exchange Carrier requesting termination of service against any claim, loss or damage arising from the Telephone Company's actions in terminating such service, unless caused by the Telephone Company's negligence.

ACCESS SERVICE

2. General Regulations (Cont'd)

2.3 Obligations of the Customer

2.3.1 Damages

The customer shall reimburse the Telephone Company for damages to Telephone Company facilities utilized to provide services under this tariff caused by the negligence or willful act of the customer or resulting from the customer's improper use of the Telephone Company facilities, or due to malfunction of any facilities or equipment provided by other than the Telephone Company. Nothing in the foregoing provision shall be interpreted to hold one customer liable for another customer's actions. The Telephone Company will, upon reimbursement for damages, cooperate with the customer in prosecuting a claim against the person causing such damage and the customer shall be subrogated to the right of recovery by the Telephone Company for the damages to the extent of such payment.

2.3.2 Ownership of Facilities and Theft

Facilities utilized by the Telephone Company to provide service under the provisions of this tariff shall remain the property of the Telephone Company. Such facilities shall be returned to the Telephone Company by the customer, whenever requested, within a reasonable period following the request in as good condition as reasonable wear will permit.

2.3.3 Equipment Space and Power

The customer shall furnish or arrange to have furnished to the Telephone Company, at no charge, equipment space and electrical power required by the Telephone Company to provide services, other than Expanded Interconnection, under this tariff at the points of termination of such services. The selection of ac or dc power shall be mutually agreed to by the customer and the Telephone Company. The customer shall also make necessary arrangements in order that the Telephone Company will have access to such spaces at reasonable times for installing, testing, repairing or removing Telephone Company services.

ACCESS SERVICE

2. General Regulations (Cont'd)

2.3 Obligations of the Customer (Cont'd)

2.3.4 Availability for Testing

The services provided under this tariff shall be available to the Telephone Company at times mutually agreed upon in order to permit the Telephone Company to make tests and adjustments appropriate for maintaining the services in satisfactory operating condition. Such tests and adjustments shall be completed within a reasonable time. No credit will be allowed for any interruptions involved during such tests and adjustments.

2.3.5 Balance

All signals for transmission over the services provided under this tariff shall be delivered by the customer balanced to ground except for ground start, duplex (DX) and McCulloh-Loop (Alarm System) type signaling and dc telegraph transmission at speeds of 75 baud or less.

2.3.6 Design of Customer Services

Subject to the provisions of 2.1.7 preceding, the customer shall be solely responsible, at its own expense, for the overall design of its services and for any redesigning or rearrangement of its services which may be required because of changes in facilities, operations or procedures of the Telephone Company, minimum protection criteria or operating or maintenance characteristics of the facilities.

ACCESS SERVICE

2. General Regulations (Cont'd)

2.3 Obligations of the Customer (Cont'd)

2.3.7 References to the Telephone Company

The customer may advise End Users that certain services are provided by the Telephone Company in connection with the service the customer furnishes to End Users; however, the customer shall not represent that the Telephone Company jointly participates in the customer's services.

2.3.8 Claims and Demands for Damages

(A) With respect to claims of patent infringement made by third persons, the customer shall defend, indemnify, protect and save harmless the Telephone Company from and against all claims arising out of the combining with, or use in connection with, the services provided under this tariff, any circuit, apparatus, system or method provided by the customer.

(B) The customer shall defend, indemnify and save harmless the Telephone Company from and against any suits, claims, losses or damages, including punitive damages, attorney fees and court costs by third persons arising out of the construction, installation, operation, maintenance, or removal of the customer's circuits, facilities, or equipment connected to the Telephone Company's services provided under this tariff, including, without limitation, Workmen's Compensation claims, actions for infringement of copyright and/or unauthorized use of program material, libel and slander actions based on the content of communications transmitted over the customer's circuits, facilities or equipment, and proceedings to recover taxes, fines, or penalties for failure of the customer to obtain or maintain in effect any necessary certificates, permits, licenses, or other authority to acquire or operate the

ACCESS SERVICE

2. General Regulations (Cont'd)

2.3 Obligations of the Customer (Cont'd)

2.3.8 Claims and Demands for Damages (Cont'd)

(B) (Cont'd)

services provided under this tariff; provided, however, the foregoing indemnification shall not apply to suits, claims, and demands to recover damages for damage to property, death, or personal injury unless such suits, claims or demands are based on the tortuous conduct of the customer, its officers, agents or employees.

(C) The customer shall defend, indemnify and save harmless the Telephone Company from and against any suits, claims, losses or damages, including punitive damages, attorney fees and court costs by the customer or third parties arising out of any act or omission of the customer in the course of using services provided under this tariff.

ACCESS SERVICE

2. General Regulations (Cont'd)

2.3 Obligations of the Customer (Cont'd)

2.3.9 Coordination with Respect to Network Contingencies

The customer shall, in cooperation with the Telephone Company, coordinate in planning the actions to be taken to maintain maximum network capability following natural or man-made disasters which affect telecommunications services. This will be done in accordance with 2.1.2(B) preceding.

2.3.10 Jurisdictional Report Requirements

(A) Jurisdictional Reports

The Percent of Interstate Use (PIU) factors described in (1) and (2) following are applied to usage-rated Carrier Common Line, Information Surcharge, Local Switching, Tandem-Switched Transport, and Residual Interconnection charges. Separate PIUs are required for flat-rated Entrance Facilities, Direct-Trunked Transport, and Multiplexers. A letter on file provided by the customer for reporting PIUs will be accepted by the Telephone Company. A consolidated PIU provided by the customer for all rate elements will also be accepted by the Telephone Company if the consolidated PIU is representative of the actual interstate use of the service. The customer reported PIU will be provided in a whole number (a number 0-100) to the Telephone Company.

ACCESS SERVICE

2. General Regulations (Cont'd)

2.3 Obligations of the Customer (Cont'd)

2.3.10 Jurisdictional Report Requirements (Cont'd)

(A) Jurisdictional Reports (Cont'd)

(1) When a customer orders Feature Group D Switched Access Service(s), unless the Telephone Company can determine the jurisdiction from the call detail, the customer will provide the projected interstate percentage for interstate usage for each end office group in its order. In the event the Telephone Company needs to project the interstate percentage, it will be determined as follows. For originating access minutes, the projected interstate percentage will be developed on a monthly basis by end office when the Feature Group D Switched Access Service access minutes are measured by dividing the measured interstate originating access minutes (the access minutes where the calling number is in one state and the called number is in another state) by the total originating access minutes, when the call detail is adequate to determine the appropriate jurisdiction. For terminating access minutes, the data used by the Telephone Company to develop the projected interstate percentage for originating access minutes will be used to develop projected interstate percentage for such terminating access minutes.

ACCESS SERVICE

2. General Regulations (Cont'd)

2.3 Obligations of the Customer (Cont'd)

2.3.10 Jurisdictional Report Requirements (Cont'd)

(A) Jurisdictional Reports (Cont'd)

(1) (Cont'd)

When originating call details are insufficient to determine the jurisdiction for the call, the customer shall supply the projected interstate percentage or authorize the Telephone Company to use the Telephone Company developed percentage. This percentage shall be used by the Telephone Company as the interstate percentage for such call detail. The Telephone Company will designate the number obtained by subtracting the projected interstate percentage for originating and terminating access minutes calculated by the Telephone Company from 100 (100 - Telephone Company calculated projected interstate percentage = intrastate percentage) as the projected intrastate percentage of use.

ACCESS SERVICE

2. General Regulations (Cont'd)

2.3 Obligations of the Customer (Cont'd)

2.3.10 Jurisdictional Report Requirements (Cont'd)

(A) Jurisdictional Reports (Cont'd)

(2) Except where Telephone Company measured access minutes are used as set forth in (4) preceding, the customer reported interstate percentage of use as set forth in (1) preceding will be used until the customer reports a different projected interstate percentage for an in service end office group. When the customer adds BHMC lines or trunks to an existing end office group, the customer shall furnish a projected interstate percentage that applies to the added BHMC, lines or trunks. When the customer discontinues BHMC, lines or trunks from an existing group, the customer shall furnish a projected interstate percentage for the discontinued BHMC, lines or trunks in the end office group. The revised report will serve as the basis for future billing and will be effective on the next bill date. No prorating or back billing will be done based on the report.

The customer shall update the interstate and intrastate jurisdictional report on a quarterly basis. The customer shall forward to the Company a revised report, to be received no later than fifteen (15) days after the first of January, April, July and October. The revised report shall show the interstate percentage for the most current data available for each service arranged for interstate use. This data shall consist of at least three (3) and no more than twelve (12) consecutive months of data, ending no more than 75 days earlier than the date the report is due (e.g., for the report due January 15, the last month of data should be no earlier than October 31). The updated interstate percentage shall be based on call detail records. The interstate percentage can be based on a statistically valid sample. The percent interstate use reported in January, April, July and October will be effective on the bill date of each such month and will serve as the basis for the next three months billing beginning in February, May, August and November, respectively.

ACCESS SERVICE

2. General Regulations (Cont'd)

2.3 Obligations of the Customer (Cont'd)

2.3.10 Jurisdictional Report Requirements (Cont'd)

(A) Jurisdictional Reports (Cont'd)

(2) (Cont'd)

Additionally, where the customer utilizes FGA Switched Access Service for calls between a Primary Exchange Carrier and a Secondary Exchange Carrier within the same Extended Area Service calling area, and/or Feature Group B Switched Access Service for calls between a Primary Exchange Carrier's access tandem and a subtending Secondary Exchange Carrier, where the Primary and Secondary Exchange Carriers are not the same Telephone Company and do not provide service under the same access service tariff, a copy of the revised report will be provided by the customer to each Secondary Exchange Carrier. The revised report will serve as the basis for the next three months' billing and will be effective on the
bill date for that service.

The customer is required to provide quarterly updates to the jurisdictional reports. Upon receipt by the Company, the updated report will serve as the basis for future billing and will be effective on the next bill date for that service. No prorating or back billing will be done based on the report. However, delayed charges will be billed utilizing the interstate percentage that was in effect at the time the charges were incurred.

When the quarterly reports are not supplied by the customer, the following steps, as set forth in (a) through (e) following, will be taken by the Company.

(a) If the customer does not supply the reports, the Company will assume the percentages to be the same as those provided in the last quarterly report. For those cases in which a quarterly report has never been received from the customer, the Company will assume the percentages to be the same as those provided in the order for service as set forth in (1) through (4) preceding.

ACCESS SERVICE

2. General Regulations (Cont'd)

2.3 Obligations of the Customer (Cont'd)

2.3.10 Jurisdictional Report Requirements (Cont'd)

(A) Jurisdictional Reports (Cont'd)

(2) (Cont'd)

(b) If no report is received by the date specified, the Company will send a letter to the customer (by certified U.S. Mail, return receipt requested) requesting an updated interstate percentage within thirty (30) days and reminding them that if no report is received, the procedures set forth in (c), following, will begin.

(c) If no report is received within thirty (30) days, the Company will designate a fifty percent (50%) interstate percentage beginning with the next billing period. This interstate percentage will be applied until an updated PIU report is submitted or until the provisions set forth in (d) or (e) following are met. The Company will send a letter to the customer (by certified U.S. Mail, return receipt requested) requesting the work papers and summary, as described in 2.3.10(B)(1)(i), following, used by the customer to substantiate the most recent interstate percentage. The requested information must be submitted by the customer to the Company within thirty (30) days after receipt of the certified letter.

ACCESS SERVICE

2. General Regulations (Cont'd)

2.3 Obligations of the Customer (Cont'd)

2.3.10 Jurisdictional Report Requirements (Cont'd)

(A) Jurisdictional Reports (Cont'd)

(2) (Cont'd)

(d) Upon receipt of the customer's work papers and summary, the Company will begin using the interstate percentage derived from the work papers and summary with the next billing period and will review the work papers and summary submitted within thirty (30) days from receipt of the information.

(e) If after review of the information, it is determined that a billing dispute exists, the Company will continue to use the derived interstate percentage and begin audit procedures as set forth in 2.3.10(B)(1), following.

ACCESS SERVICE

2. General Regulations (Cont'd)

2.3 Obligations of the Customer (Cont'd)

2.3.10 Jurisdictional Report Requirements (Cont'd)

(B) Jurisdictional Report Dispute and Auditing Procedures

If a billing dispute arises concerning the projected interstate percentage the Company will ask the customer to provide the data the customer uses to determine the projected interstate percentage as described in (1) and (2), following.

(1) Switched Access Services

(a) If the Company questions the information provided by the customer in 2.3.10(A)(5), preceding, the Company will send a letter to the customer (by certified U.S. Mail, return receipt requested) requesting that the customer contact the Company to discuss and explain their report within thirty (30) days of the Company's request.

(b) If no response is received from the customer, the Company will send a letter to the customer (by certified U.S. Mail, return receipt requested) requesting the work papers and summary as described in (i), following, used by the customer to substantiate the most recent interstate percentage. The requested information must be submitted by the customer to the Company within thirty (30) days after receipt of the certified letter.

(c) If the customer submits the work papers and summary as requested in (b), the Company will review this information within thirty (30) days after receipt of the customer's information.

ACCESS SERVICE

2. General Regulations (Cont'd)

2.3 Obligations of the Customer (Cont'd)

2.3.10 Jurisdictional Report Requirements (Cont'd)

(B) Jurisdictional Report Dispute and Auditing Procedures (Cont'd)

(1) Switched Access (Cont'd)

(d) If after review of the documentation, the Company and the customer establish a revised interstate percentage, the Company will begin using the percentage with the next billing period.

(e) If the Company and the customer do not establish a revised interstate percentage, the Company will begin the procedures as set forth in (g), following.

(f) If no response is received from the customer, the Company will begin the auditing procedures as set forth in (g), following, and notify the Commission.

ACCESS SERVICE

2. General Regulations (Cont'd)

2.3 Obligations of the Customer (Cont'd)

2.3.10 Jurisdictional Report Requirements (Cont'd)

(B) Jurisdictional Report Dispute and Auditing Procedures (Cont'd)

(1) Switched Access (Cont'd)

(g) When jurisdictional reports are not provided by the customer or a billing dispute arises, the Company may request an audit. The audit procedures and responsible party(ies) for payment of audit expenses will be determined as follows:

- If the Company and the customer mutually agree upon an independent Certified Public Accountant (CPA) auditing firm and the party(ies) agree to equally share in the payment of audit expenses, both the Company and the customer will be bound by such agreement; or

- The customer may select an independent CPA auditing firm and pay all audit expenses.

- If the audit is not conducted as set forth preceding, the Company may select an independent CPA auditing firm and pay all audit expenses.

(h) The Company will adjust the customer's PIU based upon the audit results. The PIU resulting from the audit shall be applied to the usage for the quarter the audit is completed, the usage for the quarter prior to completion of the audit and the usage for the two (2) quarters following the completion of the audit. After that time, the customer may report a revised PIU pursuant to 2.3.10(A)(5), preceding. The Company will implement the revised interstate percentage to the next billing period or quarterly report date, whichever is first.

ACCESS SERVICE

2. General Regulations (Cont'd)

2.3 Obligations of the Customer (Cont'd)

2.3.10 Jurisdictional Report Requirements (Cont'd)

(B) Jurisdictional Report Dispute and Auditing Procedures (Cont'd)

(1) Switched Access (Cont'd)

(i) The customer shall maintain and retain the work papers that show how the interstate percentage was determined and a summary derived from the actual call detail records for a minimum twelve month period which statistically substantiates each interstate percentage provided to the Company as set forth in 2.3.10(A)(5), preceding. This summary at a minimum shall include month, year, state, traffic type (e.g., originating, terminating, 500, 800, 900, etc.) and service type.

(j) If the customer does not provide the work papers and/or summary in accordance with the provisions set forth in this tariff or if a billing dispute is not resolved from the submission of such work papers, the Company shall request the actual call detail records or a statistically valid sample of such records, as set forth in 2.3.10(A)(5), preceding, on a prospective basis, not to exceed a consecutive three (3) month period. The actual call detail records will be used to statistically substantiate the interstate percentage provided to the Company and the process by which it is developed. Such call detail records shall consist of call information, including call terminating address (i.e., called number), call duration, the trunk group number(s), or access line number(s) over which the call is routed and the point at which the call enters the customer's network. The Company will not request such data more than once a year.

ACCESS SERVICE

2. General Regulations (Cont'd)

2.3 Obligations of the Customer (Cont'd)

2.3.10 Jurisdictional Report Requirements (Cont'd)

(B) Jurisdictional Report Dispute and Auditing Procedures (Cont'd)

(2) Special Access

For Special Access Service and Access Service Billing (as described in 9.3.3), the Company will ask the customer to provide the data the customer uses to determine the projected interstate percentage if a billing dispute arises or a regulatory commission questions the customer-provided interstate percentage. The customer shall supply the data within thirty (30) days of the Company request. The Company will not request such data more than once a year. The customer shall keep records of system design and functions from which the percentage of interstate and intrastate use can be ascertained and, upon request of the Company, make the records available for inspection as reasonably necessary for purposes of verification of the percentages.

(3) Jurisdictional Report Proprietary Information

The data the customer provides to the Company to support their interstate percentage is considered proprietary to the customer. The Company agrees to use and protect such information by exercising the same degree of care normally used to protect its own proprietary information.

ACCESS SERVICE

2. General Regulations (Cont'd)

2.3 Obligations of the Customer (Cont'd)

2.3.10 Jurisdictional Report Requirements (Cont'd)

(B) Jurisdictional Report Dispute and Auditing Procedures (Cont'd)

(4) Contested Audits

When a jurisdictional audit is conducted by the Company or an independent Certified Public Accountant (CPA) auditing firm selected by the Company, the audit results will be furnished to the customer by certified U.S. Mail (return receipt requested). The customer may contest the audit results by providing written notification (by certified U.S. Mail, return receipt requested), to the Company within fifteen (15) calendar days from the date the audit report is furnished to the customer by certified U.S. Mail (return receipt requested). When a jurisdictional audit is conducted by an independent Certified Public Accountant (CPA) auditing firm selected by the customer, the audit results will be furnished to the Company by certified U.S. Mail (return receipt requested). The Company may contest the audit results by providing written notification (by certified U.S. Mail, return receipt requested) to the customer within fifteen (15) calendar days from the date the audit report is furnished to the Company by certified U.S. Mail (return receipt requested).

Contested audits will be resolved by the Company and the customer within thirty (30) days of written notification, or a neutral arbitrator will be mutually agreed upon by the Company and the customer. During the initial thirty (30) day resolution period, the company and the customer will review the audit process and the data used to calculate the PIU percentage in an attempt to resolve the dispute. Should the Company and the customer resolve the dispute on the PIU percentage, a neutral arbitrator would not be warranted.

ACCESS SERVICE

2. General Regulations (Cont'd)

2.3 Obligations of the Customer (Cont'd)

2.3.10 Jurisdictional Report Requirements (Cont'd)

(B) Jurisdictional Report Dispute and Auditing Procedures (Cont'd)

(4) Contested Audits (Cont'd)

Contested audits will be resolved by a neutral arbitrator mutually agreed upon by the Company and the customer. The arbitration hearing will be conducted in Lincoln, Nebraska or a location within the Company operating territory that is mutually agreed upon by both parties. The arbitration proceeding, including the decision rendered, shall be governed by the law (both statutory and case) of the state in which the arbitration hearing is held, including, but not limited to the Uniform Arbitration Act, as adopted in that state.

Prior to the arbitration hearing, each party shall notify the arbitrator of the PIU percentage which that party believes to be correct. The arbitrator, in deciding, may adopt the PIU percentage of either party or may adopt a PIU percentage different from those proposed by the parties.

ACCESS SERVICE

2. General Regulations (Cont'd)

2.3 Obligations of the Customer (Cont'd)

2.3.10 Jurisdictional Report Requirements (Cont'd)

(B) Jurisdictional Report Dispute and Auditing Procedures (Cont'd)

(4) Contested Audits (Cont'd)

If the arbitrator adopts a PIU percentage proposed by one of the parties, the other party (whose PIU percentage was not adopted) shall pay all costs of the arbitration. If the arbitrator adopts a PIU percentage higher than the PIU percentages proposed by both parties, then the party proposing the lower PIU percentage shall pay all costs of the arbitration. If the arbitrator adopts a PIU percentage lower than the PIU percentage proposed by both parties, then the party proposing the higher PIU percentage shall pay all costs of the arbitration. If the arbitrator adopts a PIU percentage which falls between the two percentages proposed by the parties, then the parties shall each pay one-half of the arbitration costs.

Absent written notification, within the timeframe as set forth preceding, audit results cannot be contested and the Company will adjust the customer's PIU percentage based upon the audit results as set forth in 2.3.10(B)(1)(h), preceding.

ACCESS SERVICE

2. General Regulations (Cont'd)

2.3 Obligations of the Customer (Cont'd)

2.3.10 Jurisdictional Report Requirements (Cont'd)

(C) When an 8XX Data Base query, as described in 6.1.2(C)(2) following, is performed to determine carrier selection, and the associated Switched Access service is provided in whole or in part by the Company, the Percentage for Interstate Use (PIU) for the query will be the same as that of the Switched Access service, as described in (4) preceding.

When a customer's 8XX Data Base queries include one or more vertical service features, as described in 6.1.2(C)(2) following, the customer shall provide the Company with the proportion of the vertical service queries which is to be provided for interstate use. A PIU should be provided for each Service Switching Point (SSP) from which 8XX vertical service queries may originate.

ACCESS SERVICE

2. General Regulations (Cont'd)

2.3 Obligations of the Customer (Cont'd)

2.3.11 Determination of Interstate Charges for Mixed Interstate and Intrastate Access Service

When mixed interstate and intrastate Access Service is provided, all charges (i.e., nonrecurring, monthly and/or usage) including optional features charges, will be prorated between interstate and intrastate. The percentage provided in the reports as set forth in 2.3.10 (A) preceding will serve as the basis for prorating the charges. The percentage of an Access Service to be charged as interstate is applied in the following manner:

(A) For monthly and nonrecurring chargeable rate elements, multiply the percent interstate use times the quantity of chargeable elements times the stated tariff rate per element.

(B) For usage sensitive (i.e., access minutes and calls) chargeable rate elements, multiply the percent interstate use times actual use (i.e., measured or Telephone Company assumed average use) times the stated tariff rate.

The interstate percentage will change as revised usage reports are submitted as set forth in 2.3.10 preceding

2.3.12 Media Stimulated Mass Calling Notification

When Switched Access Service is used to provide Media Stimulated Mass Calling, notification shall be sent to the Telephone Company as prescribed in 6.6.1(C) following.

ACCESS SERVICE

2. General Regulations (Cont'd)

2.3 Obligations of the Customer (Cont'd)

2.3.13 Certification of Special Access Services (Lines) As Interstate

(A) Interstate Classification Requirement

Pursuant to Federal Communications Commission Order FCC 89-224 adopted June 29, 1989, and released July 20, 1989, Special Access Lines are to be classified as interstate when the services carry more than a de minimis amount of interstate traffic. Interstate traffic is deemed de minimis when the interstate traffic amounts to ten percent (10%) or less of the total traffic on a Special Access Line.

(B) Certification Requirement

When a customer orders a Special Access Line, the customer shall certify, in its order, that the Special Access Line carries interstate traffic and the interstate traffic is more than ten percent (10%) of the total traffic carried on the Special Access Line.

(C) Verification Information

If a billing dispute arises or a regulatory commission questions the interstate certification for a Special Access Line, the Telephone Company will ask the customer to provide the general information on system design and functionality it uses to determine that the Special Access Line interstate traffic is more than ten percent (10%) of the total traffic carried on the Special Access Line. If the customer has usage information or usage studies which it uses to verify the interstate traffic, the customer shall supply the studies when requested by the Telephone Company. The customer shall supply the data within 30 days of the Telephone Company request.

ACCESS SERVICE

2. General Regulations (Cont'd)

2.3 Obligations of the Customer (Cont'd)

2.3.13 Certification of Special Access Services (Lines) As Interstate (Cont'd)

(D) Certification of Existing Lines

Special Access Lines classified as interstate prior to May 1, 1990, will be certified. Users of interstate Special Access Lines will be instructed to inform the Telephone Company no later than 90 days from May 1, 1990, which special access lines classified as interstate do not carry a de minimis amount of interstate traffic and to certify that all other Special Access Lines carry a de minimis amount of interstate traffic.

ACCESS SERVICE

2. General Regulations (Cont'd)

2.4 Payment Arrangements and Credit Allowances

2.4.1 Payment of Rates, Charges and Deposits

(A) The Telephone Company will, in order to safeguard its interests, only require a customer which has a proven history of late payments to the Telephone Company or does not have established credit, to make a deposit prior to or at any time after the provision of a service to the customer to be held by the Telephone Company as a guarantee of the payment of rates and charges. No such deposit will be required of a customer which is a successor of a company which has established credit and has no history of late payments to the Telephone Company. Such deposit may not exceed the actual or estimated rates and charges for the service for a two month period. The fact that a deposit has been made in no way relieves the customer from complying with the Telephone Company's regulations as to the prompt payment of bills. At such time as the provision of the service to the customer is terminated, the amount of the deposit will be credited to the customer's account and any credit balance which may remain will be refunded.

ACCESS SERVICE

2. General Regulations (Cont'd)

2.4 Payment Arrangements and Credit Allowances (Cont'd)

2.4.1 Payment of Rates, Charges and Deposits (Cont'd)

(A) (Cont'd)

Such a deposit will be refunded or credited to the account when the customer has established credit or, in any event, after the customer has established a one-year prompt payment record at any time prior to the termination of the provision of the service to the customer. In case of a cash deposit, for the period the deposit is held by the Telephone Company, the customer will receive interest at the same percentage rate as that set forth in (B)(3)(b)(i) or in (B)(3)(b)(ii), whichever is lower. The rate will be compounded daily for the number of days from the date the customer deposit is received by the Telephone Company to and including the date such deposit is credited to the customer's account or the date the deposit is refunded by the Telephone Company. Should a deposit be credited to the customer's account, as indicated above, no interest will accrue on the deposit from the date such deposit is credited to the customer's account.

(B) The Telephone Company shall bill on a current basis all charges incurred by and credits due to the customer under this tariff attributable to services established or discontinued during the preceding billing period. In addition, the Telephone Company shall bill in advance charges for all services to be provided during the ensuing billing period except for charges associated with service usage, additional bill copies, and for the Federal Government which will be billed in arrears. The bill day (i.e., the billing date of a bill for a customer for Access Service under this tariff), the period of service each bill covers and the payment date will be as follows:

ACCESS SERVICE

2. General Regulations (Cont'd)

2.4 Payment Arrangements and Credit Allowances (Cont'd)

2.4.1 Payment of Rates, Charges and Deposits (Cont'd)

(B) (Cont'd)

(1) For End User Access Service and Presubscription Service, the Telephone Company will establish a bill day each month for each end user account or advise the customer in writing of an alternate billing schedule. Alternate billing schedules shall not be established on less than 60 days notice or initiated by the Telephone Company more than twice in any consecutive 12 month period. The bill will cover End User Access Service charges for the ensuing billing period except for End User Access Service for the Federal Government which will be billed in arrears. Any applicable Presubscription Charges, any known unbilled charges for prior periods and any known unbilled adjustments for prior periods for End User Access Service and Presubscription Service will be applied to this bill. Such bills are due when rendered.

(2) For Service other than End User Access Service and Presubscription Service, the Telephone Company will establish a bill day each month for each customer account or advise the customer in writing of an alternate billing schedule. Alternate billing schedules shall not be established on less than 60 days notice or initiated by the Telephone Company more than twice in any consecutive 12 month period. The bill will cover nonusage sensitive service charges for the ensuing billing period for which the bill is rendered, any known unbilled nonusage sensitive charges for prior periods and unbilled usage charges for the period after the last bill day through the current bill day. Any known unbilled usage charges for prior periods and any known unbilled adjustments will be applied to this

ACCESS SERVICE

2. General Regulations (Cont'd)

2.4 Payment Arrangements and Credit Allowances (Cont'd)

2.4.1 Payment of Rates, Charges and Deposits (Cont'd)

(B) (Cont'd)

(2) (Cont'd)

bill. Payment for such bills is due as set forth in (3) following. If payment is not received by the payment date, as set forth in (3) following in immediately available funds, a late payment penalty will apply as set forth in (3) following.

(3) (a) All bills dated as set forth in (2) preceding for service, other than End User Service and Presubscription Service, provided to the customer by the Telephone Company are due 31 days (payment date) after the bill day or by the next bill date (i.e., same date in the following month as the bill date), whichever is the shortest interval, except as provided herein, and are payable in immediately available funds. If such payment date would cause payment to be due on a Saturday, Sunday or Holiday (i.e., New Year's Day, Martin Luther King, Jr. Day, Independence Day, Labor Day, Thanksgiving Day, Christmas Day, the second Tuesday in November and a day when Washington's Birthday, Memorial Day or Columbus Day is legally observed), payment for such bills will be due from the customer as follows:

If such payment date falls on a Sunday or on a Holiday which is observed on a Monday, the payment date shall be the first non-Holiday day following such Sunday or Holiday. If such payment date falls on a Saturday or on a Holiday which is observed on Tuesday, Wednesday, Thursday or Friday, the payment date shall be the last non-Holiday day preceding such Saturday or Holiday.

ACCESS SERVICE

2. General Regulations (Cont'd)

2.4 Payment Arrangements and Credit Allowances (Cont'd)

2.4.1 Payment of Rates, Charges and Deposits (Cont'd)

(B) (Cont'd)

(3) (Cont'd)

(b) Further, if any portion of the payment is received by the Telephone Company after the payment date as set forth in (a) preceding, or if any portion of the payment is received by the Telephone Company in funds which are not immediately available to the Telephone Company, then a late payment penalty shall be due to the Telephone Company. The late payment penalty shall be the portion of the payment not received by the payment date times a late factor. The late factor shall be the lesser of:

(i) the highest interest rate (in decimal value) which may be levied by law for commercial transactions, compounded daily for the number of days from the payment date to and including the date that the IC actually makes the payment to the Telephone Company, or

(ii) 0.000590 per day, compounded daily for the number of days from the payment date to and including the date that the customer actually makes the payment to the Telephone Company.

ACCESS SERVICE

2. General Regulations (Cont'd)

2.4 Payment Arrangements and Credit Allowances (Cont'd)

2.4.1 Payment of Rates, Charges and Deposits (Cont'd)

(B) (Cont'd)

(3) (Cont'd)

(c) Billing Disputes Resolved in Favor of the Telephone Company

Late payment charges will apply to amounts withheld pending settlement of the dispute. Late payment charges are calculated as set forth in (b) preceding except that when the customer disputes the bill on or before the payment date and pays the undisputed amount on or before the payment date, the penalty interest period shall not begin until 10 days following the payment date.

(d) Billing Disputes Resolved in Favor of the Customer

If the customer pays the total billed amount and disputes all or part of the amount, the Telephone Company will refund the overpayment. In addition, the Telephone Company will pay penalty interest to the customer. When a claim is filed within 90 days of the due date, the penalty interest period shall begin on the payment date. When a claim is filed more than 90 days after the due date, the penalty interest period shall begin from the date of the claim or the date of overpayment, which ever is later. The penalty interest period shall end on the date that the Telephone Company actually refunds the overpayment to the customer. The penalty interest rate shall be the lesser of:

(i) the highest interest rate (in decimal value) which may be levied by law for commercial transactions, compounded daily for the number of days from the first date to and including the last date of the period involved, or

ACCESS SERVICE

2. General Regulations (Cont'd)

2.4 Payment Arrangements and Credit Allowances (Cont'd)

2.4.1 Payment of Rates, Charges and Deposits (Cont'd)

(B) (Cont'd)

(3)(d)(Cont'd)

(ii) 0.000590 per day, compounded daily for the number of days from the first date to and including the last date of the period involved.

(C) When a payment for Access Service charges billed under this tariff is due to the Telephone Company from the customer as set forth in (B)(3)(a) preceding on the same payment date that a Purchase of Accounts Receivable net purchase amount is due to the customer from the Telephone Company, the Telephone Company may, with at least 31 days notice to the customer, net the payment for customer Access Service Charges with the net purchase amount. The Telephone Company will pay the net amount to the customer in funds which are immediately available on the payment date when such net amount is due to the customer or require the customer to pay to the Telephone Company in funds which are immediately available the net amount when such net amount is due to the Telephone Company. If either party does not make the payment on the payment date, a late payment penalty as set forth in (B)(3)(b) preceding applies.

(D) Adjustments for the quantities of services established or discontinued in any billing period beyond the minimum period set forth for services in other sections of this tariff will be prorated to the number of days or major fraction of days based on a 30 day month. The Telephone Company will, upon request, furnish such detailed information as may reasonably be required for verification of any bill. When a customer requires information related and necessary to verify bills for any and all services, such information will be available upon request without charge and within a reasonable period, in any event no later than the number of days in a normal billing period.

ACCESS SERVICE

2. General Regulations (Cont'd)

2.4 Payment Arrangements and Credit Allowances (Cont'd)

2.4.1 Payment of Rates, Charges and Deposits (Cont'd)

(E) When a rate as set forth in this tariff is shown to more than two decimal places, the charges will be determined using the rate shown. The resulting amount will then be rounded to the nearest penny (i.e., rounded to two decimal places).

(F) When more than one copy of a customer bill for services provided under the provisions of this tariff is furnished to the customer, an additional charge applies for each copy of the bill as set forth in 9.3.3 following.

2.4.2 Minimum Periods

The minimum period for which services are provided and for which rates and charges are applicable is one month except for those services set forth in 5.2.5(B) and 9.4.2 following and those usage-rated services set forth in Section 6 following.

The minimum period for which service is provided and for which rates and charges are applicable for a Specialized Service or Arrangement provided on an individual case basis as set forth in 12. following, is one month unless a different minimum period is established with the individual case filing.

When a service is discontinued prior to the expiration of the minimum period, charges are applicable, whether the service is used or not, as follows:

(A) When a service with a one month minimum period is discontinued prior to the expiration of the minimum period, a one month charge will apply at the rate level in effect at the time service is discontinued.

(B) When a service with a minimum period greater than one month is discontinued prior to the expiration of the minimum period, the applicable charge will be the lesser of (1) the Telephone Company's total nonrecoverable costs less the net salvage value for the discontinued service or (2) the total monthly charges, at the rate level in effect at the time service is discontinued, for the remainder of the minimum period.

2. General Regulations (Cont'd)

2.4 Payment Arrangements and Credit Allowances (Cont'd)

2.4.3 Cancellation of an Order for Service

Provisions for the cancellation of an order for service are set forth in other applicable sections of this tariff.

2.4.4 Credit Allowance for Service Interruptions

(A) General

A service is interrupted when it becomes unusable to the customer because of a failure of a facility component used to furnish service under this tariff, when the service is preempted as a result of invoking NSEP treatment, or in the event that the protective controls applied by the Telephone Company result in the complete loss of service by the customer as set forth in 6.5.1 following. An interruption period starts when an inoperative service is reported to the Telephone Company, and ends when the service is operative.

For purposes of administering the following regulations a major fraction shall mean more than half of the incremental credit period using the unit of time in which the service interruption is measured, i.e., 30 seconds, 1 minute, 1 hour. For example a major fraction for a 30 minute period equals 16 minutes for a 24 hour period equals 12 hours and one minute and for a 5 minute period equals 2 minutes and 31 seconds.

ACCESS SERVICE

2. General Regulations (Cont'd)

2.4 Payment Arrangements and Credit Allowances (Cont'd)

2.4.4 Credit Allowance for Service Interruptions (Cont'd)

(B) When a Credit Allowance Applies

In case of an interruption to any service, allowance for the period of interruption, if not due to the negligence of the customer, shall be as follows:

(1) For Special Access Services for flat-rated Switched Access Service rate elements, no credit shall be allowed for an interruption of less than 30 minutes. The customer shall be credited for an interruption of 30 minutes or more at the rate of 1/1440 of the monthly charges for the facility or service for each period of 30 minutes or major fraction thereof that the interruption continues.

The monthly charges used to determine the credit shall be as follows:

(a) For two-point services, the monthly charge shall be the total of all the monthly rate element charges associated with the service (i.e., two channel terminations, channel mileage and optional features and functions).

ACCESS SERVICE

2. General Regulations (Cont'd)

2.4 Payment Arrangements and Credit Allowances (Cont'd)

2.4.4 Credit Allowance for Service Interruptions (Cont'd)

(B) When a Credit Allowance Applies (Cont'd)

(1) (Cont'd)

(b) For multipoint services, the monthly charge shall be only the total of all the monthly rate element charges associated with that portion of the service that is inoperative (i.e., a channel termination per customer premises, channel mileage and optional features and functions).

(c) For multiplexed services, the monthly charge shall be the total of all the monthly rate element charges associated with that portion of the service that is inoperative. When the facility which is multiplexed or the multiplexer itself is inoperative, the monthly charge shall be the total of all the monthly rate element charges associated with the service (i.e., the channel termination, channel mileage, entrance facility, direct-trunked transport, and optional features and functions, including the multiplexer on the facility to the hub, and the channel terminations, channel mileages and optional features and functions on the individual services from the hub). When the service which rides a channel of the multiplexed facility is inoperative, the monthly charge shall be the total of all the monthly rate element charges associated with that portion of the service from the hub to a customer premises (i.e., channel termination, channel mileage, direct-trunked transport, and optional features and functions).

ACCESS SERVICE

2. General Regulations (Cont'd)

2.4 Payment Arrangements and Credit Allowances (Cont'd)

2.4.4 Credit Allowance for Service Interruptions (Cont'd)

(B) When a Credit Allowance Applies (Cont'd)

(1) (Cont'd)

(d) For flat-rated Switched Access Service rate elements, the monthly charge shall be the total of all the monthly rate element charges associated with the service (i.e., Entrance Facility, Direct-Trunked Transport and Multiplexing).

ACCESS SERVICE

2. General Regulations (Cont'd)

2.4 Payment Arrangements and Credit Allowances (Cont'd)

2.4.4 Credit Allowance for Service Interruptions (Cont'd)

(B) When a Credit Allowance Applies (Cont'd)

(2) For Program Audio and Video Special Access Services, no credit shall be allowed for an interruption of less than 30 seconds. The customer shall be credited for an interruption of 30 seconds or more as follows:

(a) For two-point services, when monthly rates are applicable, the credit shall be at the rate of 1/8640 of the monthly charges for the service for each period of 5 minutes or major fraction thereof that the interruption continues.

(b) For two-point services, when daily rates are applicable, the credit shall be at the rate of 1/288 of the daily charges for the service for each period of 5 minutes or major fraction thereof that the interruption continues.

(c) For multipoint services, when monthly rates are applicable, the credit shall be at the rate of 1/8640 of the monthly charges for each channel termination, channel mileage and optional features and functions that are inoperative for each period of 5 minutes or major fraction thereof that the interruption continues.

(d) For multipoint services, when daily rates are applicable, the credit shall be at the daily rate of 1/288 of the daily charges for channel termination, channel mileage and optional features and functions that are inoperative for each period of 5 minutes or major fraction thereof that the interruption continues.

ACCESS SERVICE

2. General Regulations (Cont'd)

2.4 Payment Arrangements and Credit Allowances (Cont'd)

2.4.4 Credit Allowance for Service Interruptions (Cont'd)

(B) When a Credit Allowance Applies (Cont'd)

(2) (Cont'd)

(e) For multipoint services, the credit for the monthly or daily charges includes the charges for the distribution amplifier only when the distribution amplifier is inoperative.

(f) When two or more interruptions occur during a period of 5 consecutive minutes, such multiple interruptions shall be considered as one interruption.

ACCESS SERVICE

2. General Regulations (Cont'd)

2.4 Payment Arrangements and Credit Allowances (Cont'd)

2.4.4 Credit Allowance for Service Interruptions (Cont'd)

(B) When a Credit Allowance Applies (Cont'd)

(3) For Switched Access Service usage-rated elements and Directory Assistance Service, no credit shall be allowed for an interruption of less than 24 hours. The customer shall be credited for an interruption of 24 hours or more at the rate of 1/30 of the monthly rates, or the assumed minutes of use charge, whichever is applicable to the service involved, for each period of 24 hours or major fraction, as specified in 2.4.4 (A) preceding, that the interruption continues.

(4) The credit allowance(s) for an interruption or for a series of interruptions shall not exceed any monthly rate or assumed minutes of use whichever is applicable for the service interrupted in any one monthly billing period.

(5) For certain Special Access services (Digital Data Access, D1-D6, and High Capacity, HC1), any period during which the error performance is below that specified for the service will be considered as an interruption.

(6) Service interruptions for Specialized Services or Arrangements provided under the provisions of 12. following shall be administered in the same manner as those set forth in this section (2.4.4) unless other regulations are specified with the individual case filing.

ACCESS SERVICE

2. General Regulations (Cont'd)

2.4 Payment Arrangements and Credit Allowances (Cont'd)

2.4.4 Credit Allowance for Service Interruptions (Cont'd)

(C) When a Credit Allowance Does Not Apply

No credit allowance will be made for:

(1) Interruptions caused by the negligence of the customer.

(2) Interruptions of a service due to the failure of equipment or systems provided by the customer or others.

(3) Interruptions of a service during any period in which the Telephone Company is not afforded access to the premises where the service is terminated.

(4) Interruptions of a service when the customer has released that service to the Telephone Company for maintenance purposes, to make rearrangements, or for the implementation of an order for a change in the service during the time that was negotiated with the customer prior to the release of that service. Thereafter, a credit allowance as set forth in (B) preceding applies.

(5) Interruptions of a service which continue because of the failure of the customer to authorize replacement of any element of special construction. The period for which no credit allowance is made begins on the seventh day after the customer receives the Telephone Company's written notification of the need for such replacement and ends on the day after receipt by the Telephone Company of the customer's written authorization for such replacement.

ACCESS SERVICE

2. General Regulations (Cont'd)

2.4 Payment Arrangements and Credit Allowances (Cont'd)

2.4.4 Credit Allowance for Service Interruptions (Cont'd)

(C) When a Credit Allowance Does Not Apply (Cont'd)

(6) Periods when the customer elects not to release the service for testing and/or repair and continues to use it on an impaired basis.

(7) An interruption or a group of interruptions, resulting from a common cause, for amounts less than one dollar.

(D) Use of an Alternative Service Provided by the Telephone Company

Should the customer elect to use an alternative service provided by the Telephone Company during the period that a service is interrupted, the customer must pay the tariffed rates and charges for the alternative service used.

(E) Temporary Surrender of a Service

In certain instances, the customer may be requested by the Telephone Company to surrender a service for purposes other than maintenance, testing or activity relating to a service order. If the customer consents or in the instance of preemption under NSEP treatment as set forth in 2.1.13 preceding, a credit allowance will be granted. The credit allowance will be 1/1440 of the monthly rate for each period of 30 minutes or fraction thereof that the service is surrendered. In no case will the credit allowance exceed the monthly rate for the service surrendered in any one monthly billing period.

ACCESS SERVICE

2. General Regulations (Cont'd)

2.4 Payment Arrangements and Credit Allowances (Cont'd)

2.4.5 Re-establishment of Service Following Fire, Flood or Other Occurrence

(A) Nonrecurring Charges Do Not Apply

Charges do not apply for the re-establishment of service following a fire, flood or other occurrence attributed to an Act of God provided that:

(1) The service is of the same type as was provided prior to the fire, flood or other occurrence.

(2) The service is for the same customer.

(3) The service is at the same location on the same premises.

(4) The re-establishment of service begins within 60 days after Telephone Company service is available. (The 60 day period may be extended a reasonable period if the renovation of the original location on the premises affected is not practical within the allotted time period).

(B) Nonrecurring Charges Apply

Nonrecurring Charges apply for establishing service at a different location on the same premises or at a different premises pending re-establishment of service at the original location.

ACCESS SERVICE

2. General Regulations (Cont'd)

2.4 Payment Arrangements and Credit Allowances (Cont'd)

2.4.6 Title or Ownership Rights

(A) The payment of rates and charges by customers for the services offered under the provisions of this tariff does not assign, confer or transfer title or ownership rights to proposals or facilities developed or utilized, respectively, by the Telephone Company in the provision of such services.

2.4.7 Access Services Provided By More Than One Telephone Company

(A) When an Access Service is provided by more than one Telephone Company, the Telephone Companies involved will mutually agree upon one of the billing methods as set forth in (1) and (2) following based upon the interconnection arrangements between the Telephone Companies, the availability of measurement capability and the type of service provided. The Telephone Company shall provide notice in writing 30 days in advance of any changes to these billing methods. For Feature Group A the single company billing method would apply and for Feature Groups B, C, and D and Special Access Service, the multiple company billing method applies.

The billing methods for FGA, FGB, FGC, FGD, and Special Access will be in accordance with the MECAB and MECOD standards accepted by the Commission in the FCC Order in CC Docket No. 87-579, Phase II, dated September 28, 1988.

The customer will place the order for the service as set forth in 5.2.8 dependent upon the billing method. The Telephone Company receiving the order or copy of the order from the customer will be responsible for billing the customer.

ACCESS SERVICE

2. General Regulations (Cont'd)

2.4 Payment Arrangements and Credit Allowances (Cont'd)

2.4.7 Access Services Provided By More Than One Telephone Company (Cont'd)

(A) (Cont'd)

(1) Single Company Billing:

(a) The Telephone Company receiving the order from the customer, as specified in 5.2.8(A)(1), will arrange to provide the service, determine the applicable charges and bill the customer for the entire service in accordance with its Access Services tariff. All other telephone companies are precluded from billing for the service.

(2) Multiple Company (Interconnection Point) Billing:

(a) Each Telephone Company receiving an order or copy of the order from the customer, as specified in 5.2.8(A)(2) following will determine the applicable charges for the portion of the service it provides and bill in accordance with its Access Services tariff as follows:

(i) Determine the appropriate Local Transport or Channel Mileage by computing the number of airline miles between the Telephone Company premises (end office, access tandem or serving wire centers for Switched Access or serving wire centers for Special Access) using the V & H method set forth in 6.7.6 and 7.2.4.

(ii) Determine the billing percentage (BP), as set forth in EXCHANGE CARRIER ASSOCIATION TARIFF F.C.C. NO. 4, which represents the portion of the service provided by each Telephone Company;

2. General Regulations (Cont'd)

2.4 Payment Arrangements and Credit Allowances (Cont'd)

2.4.7 Access Services Provided by More Than One Telephone Company (Cont'd)

(A) (Cont'd)

(2) (Cont'd)

(a) (Cont'd)

(iii) For Feature Group D Tandem-Switched Transport:

- multiply the number of originating and terminating access minutes of use routed over the facility times the number of airline miles, as set forth in (i) preceding, times the BP for each Telephone Company, as set forth in (ii) preceding, times the Tandem-Switched Facility rate.

- multiply the Tandem-Switched Termination rate times the number of originating and terminating access minutes routed over the facility, then divide by 2.

- multiply the Tandem-Switching Charge rate times the number of originating and terminating access minutes that are switched at the tandem.

ACCESS SERVICE

2. General Regulations (Cont'd)

2.4 Payment Arrangements and Credit Allowances (Cont'd)

2.4.7 Access Services Provided by More Than One Telephone Company (Cont'd)

(A) (Cont'd)

(2) (Cont'd)

(a) (Cont'd)

(iv) For Feature Group D Direct-Trunked Transport:

- multiply the number of airline miles, as set forth in (i) preceding, times the BP for each Telephone Company, as set forth in (ii) preceding, times the Direct-Trunked Facility rate.

- The Direct-Trunked Termination rate is applied as set forth in 6.8.1 following. (Note: The BP is not applied to the Switched Access Direct-Trunked Termination rate.)

ACCESS SERVICE

2. General Regulations (Cont'd)

2.4 Payment Arrangements and Credit Allowances (Cont'd)

2.4.7 Access Services Provided by More Than One Telephone Company (Cont'd)

(A) (Cont'd)

(2) (Cont'd)

(a) (Cont'd)

(v) For Feature Groups B, C and D:

- multiply the Residual Interconnection Charge (RIC) rate times the number of originating and terminating access minutes that are switched at the end office. The company that owns the end office is the only company that bills the RIC.

- The Entrance Facility rate and the Multiplexing rate are applied as set forth in 6.8.1 following.

- The Billing Percentage (BP) is not applicable to the Residual Interconnection Charge, Entrance Facility or Multiplexing.

ACCESS SERVICE

2. General Regulations (Cont'd)

2.4 Payment Arrangements and Credit Allowances (Cont'd)

2.4.7 Access Services Provided by More Than One Telephone Company (Cont'd)

(A) (Cont'd)

(2) (Cont'd)

(a) (Cont'd)

(vi) For Special Access using BP method, multiply the number of airline miles, as set forth in (i) preceding, times the BP for each Telephone Company, as set forth in (ii) preceding, times the Channel Mileage Facility rate. Add the Channel Mileage Termination rate.

(vii) If in any instance three or more Telephone Companies are involved in providing an Access Service, the intermediate Telephone Company(s) will determine the appropriate charges as set forth in (iii) through (vi) preceding, except the Channel Mileage Termination rate does not apply at the intermediate Telephone Company(s) offices.

(b) Nonrecurring charges associated with rate elements subject to billing percentages, or to any other methods of division to reflect meet point billing, will be divided among the Telephone Company(s) involved in an analogous manner.

All other appropriate recurring and nonrecurring charges in each Telephone Company's tariff are applicable.

ACCESS SERVICE

2. General Regulations (Cont'd)

2.5 Connections

2.5.1 General

Equipment and Systems (i.e., terminal equipment, multiline terminating systems and communications systems) may be connected with Switched and Special Access Service furnished by the Telephone Company where such connection is made in accordance with the provisions specified in Technical Reference Publication AS No. 1 and in 2.1 preceding.

2.5.2 Standard Access Service Connections

Access Services are provided by means of wire, fiber optics, radio or any other suitable technology or a combination thereof. Special Access Service connections are made directly or through a Telephone Company Hub where bridging, multiplexing or Network Reconfiguration Service functions are performed. These connections can either be analog or digital.

ACCESS SERVICE

2. General Regulations

2.6 Definitions

Certain terms used herein are defined as follows:

Access Code

The term "Access Code" denotes a uniform five or seven digit code assigned by the Telephone Company to an individual customer. The seven digit code has the form 101XXXX, and the seven digit code has the form 950-0XXX or 950-1XXX.

Access Minutes

The term "Access Minutes" denotes that usage of exchange facilities in interstate or foreign service for the purpose of calculating chargeable usage. On the originating end of an interstate or foreign call, usage is measured from the time the originating end user's call is delivered by the Telephone Company to and acknowledged as received by the customer's facilities connected with the originating exchange. On the terminating end of an interstate or foreign call, usage is measured from the time the call is received by the end user in the terminating exchange. Timing of usage at both originating and terminating ends of an interstate or foreign call shall terminate when the calling or called party disconnects, whichever event is recognized first in the originating and terminating exchanges, as applicable.

Access Tandem

The term "Access Tandem" denotes a Telephone Company switching system that provides a concentration and distribution function for originating or terminating traffic between end offices and a customer's premises.

Alternate Tandem Switching Provider (ATSP)

The term "Alternate Tandem Switching Provider (ATSP)" denotes any interested third party opting to receive CIC and OZZ Signaling Information from the Telephone Company equal access end office(s) so that this third party can offer tandem switching functions.

ACCESS SERVICE

2. General Regulations (Cont'd)

2.6 Definitions (Cont'd)

Answer/Disconnect Supervision

The term "Answer/Disconnect Supervision" denotes the transmission of the switch trunk equipment supervisory signal (off-hook or on-hook) to the customer's point of termination as an indication that the called party has answered or disconnected.

Asymmetrical Digital Subscriber Line (ADSL)

The term “Asymmetrical Digital Subscriber Line” denotes a service that is designed to provide high bandwidth services over the existing copper distribution network.

Attenuation Distortion

The term "Attenuation Distortion" denotes the difference in loss at specified frequencies relative to the loss at 1004 Hz, unless otherwise specified.

Authorized Billing Agent

The term "Authorized Billing Agent" denotes the third party hired by a telecommunications service provider to perform billing and collection services for the telecommunications service provider.

Balance (100 Type) Test Line

The term "Balance (100 Type) Test Line" denotes an arrangement in an end office which provides for balance and noise testing.

Bit

The term "Bit" denotes the smallest unit of information in the binary system of notation.

Billing Name and Address

The term "Billing Name and Address" denotes the name and address provided to a local exchange company by each of its local exchange customers to which the local exchange company directs bills for its services.

ACCESS SERVICE

2. General Regulations (Cont'd)

2.6 Definitions (Cont'd)

Business Day

The term "Business Day" denotes the times of day that a company is open for business. Generally, in the business community, these are 8:00 or 9:00 A.M. to 5:00 or 6:00 P.M., respectively, with an hour for lunch, Monday through Friday, resulting in a standard forty (40) hour work week. However, Business Day hours for the Telephone Company may vary based on company policy, union contract and location. To determine such hours for an individual company, or company location, that company should be contacted at the address shown under the Issuing Carrier's name listed on Title Pages 2 through 66 preceding.

Busy Hour Minutes of Capacity (BHMC)

The term "Busy Hour Minutes of Capacity (BHMC)" denotes the customer specified maximum amount of Switched Access Service and/or Directory Assistance Service access minutes the customer expects to be handled in an end office switch during any hour in an 8:00 A.M. to 11:00 P.M. period for the Feature Group and/or Directory Assistance Service ordered. This customer furnished BHMC quantity is the input data the Telephone Company uses to determine the number of transmission paths for the Feature Group and/or Directory Assistance Service ordered.

Cable Space

The term "Cable Space" denotes any passage or opening in, on, under, over or through the serving wire center cable support structure (e.g., electrical metallic tubing, cable vault or alternate splicing chamber, riser support structure, cable runway, etc.) required to bring fiber optic cable to a multiplexing node under Expanded Interconnection.

Call

The term "Call" denotes a customer attempt for which the complete address code (e.g., 0-, 911, or 10 digits) is provided to the serving dial tone office.

ACCESS SERVICE

2. General Regulations (Cont'd)

2.6 Definitions (Cont'd)

Carrier Identification Code (CIC)

The term "Carrier Identification Code (CIC)" denotes the caller's interexchange carrier to which the traffic should be directed.

Carrier or Common Carrier

See Interexchange Carrier

CCS

The term "CCS" denotes a hundred call seconds, which is a standard unit of traffic load that is equal to 100 seconds of usage or capacity of a group of servers (e.g., trunks).

Central Office

The term "Central Office" denotes a local Telephone Company switching system where Telephone Exchange Service customer station loops are terminated for purposes of interconnection to each other and to trunks.

Central Office Equipment Technician

The term "Central Office Equipment Technician" denotes a Telephone Company employee who performs installation and/or repair work including testing and trouble isolation, within the Telephone Company Central Office. Included in this category would be Toll Radio Technician, Test Technician, and Toll Terminal Technician.

Central Office Prefix

The term "Central Office Prefix" denotes the first three digits (NXX) of the seven digit telephone number assigned to a customer's Telephone Exchange Service when dialed on a local basis.

ACCESS SERVICE

2. General Regulations (Cont'd)

2.6 Definitions (Cont'd)

Channel(s)

The term "Channel(s)" denotes an electrical or photonic, in the case of fiber optic-based transmission systems, communications path between two or more points of termination.

Channel Service Unit

The term "Channel Service Unit" denotes equipment which performs one or more of the following functions: termination of a digital facility, regeneration of digital signals, detection and/or correction of signal format error, and remote loop back.

Channelize

The term "Channelize" denotes the process of multiplexing- demultiplexing wider bandwidth or higher speed channels into narrower band-width or lower speed channels.

Clear Channel Capability

The term "Clear Channel Capability" denotes the ability to transport twenty-four 64 Kbps over a DS1 Mbps High Capacity service via a B8ZS line code format.

C-Message Noise

The term "C-Message Noise" denotes the frequency weighted average noise within an idle voice channel. The frequency weighting, called C-message, is used to simulate the frequency characteristic of the 500-type telephone set and the hearing of the average subscriber.

ACCESS SERVICE

2. General Regulations (Cont'd)

2.6 Definitions (Cont'd)

C-Notched Noise

The term "C-Notched Noise" denotes the C-message frequency weighted noise on a voice channel with a holding tone, which is removed at the measuring end through a notch (very narrow band) filter.

Coin Station

The term "Coin Station" denotes a location where Telephone Company equipment is provided in a public or semipublic place where Telephone Company customers can originate telephonic communications and pay the applicable charges by inserting coins into the equipment.

Collect Call

The term "Collect Call" denotes a call for which the calling party requests the interexchange carrier to bill the call to the called party's line number.

Collocation Space

The term "Collocation Space" describes the area in a Telephone Company serving wire center set aside for the exclusive use of an Interconnector purchasing Expanded Interconnection. This space may be enclosed by a wall or cage. Only multiplexing or transmission equipment shall be placed in this space. See Multiplexing Node.

Common Channel Signaling

The term "Common Channel Signaling" (CCS) denotes a high speed packet switched communications network which is separate (out of band) from the public packet switched and message networks. Its purpose is to carry addressed signaling messages for individual trunk circuits and/or database related services between Signaling Points in the CCS network.

ACCESS SERVICE

2. General Regulations (Cont'd)

2.6 Definitions (Cont'd)

Common Line

The term "Common Line" denotes a line, trunk, pay telephone line or other facility provided under the general and/or local exchange service tariffs of the Telephone Company, terminated on a central office switch. A common line-residence is a line or trunk provided under the residence regulations of the general and/or local exchange service tariffs. A common line-business is a line provided under the business regulations of the general and/or local exchange service tariffs.

Communications System

The term "Communications System" denotes channels and other facilities which are capable of communications between terminal equipment provided by other than the Telephone Company.

Conduit Space

The term "Conduit Space" denotes any reinforced passage or opening in, on, under, over or through the ground between the feeder route conduit system (interconnection point, e.g., a manhole) and cable vault location capable of containing communications facilities, and includes: cable entrance facilities; main conduit; ducts; inner ducts; sub-duct; gas traps; underground dips such as short sections of conduit under roadway, driveways, parking lots and similar conduit installations; required to bring the Interconnector provided fiber optic cable into the Telephone Company serving wire center under Expanded Interconnection.

Cross-connect

The term "Cross-connect" denotes the connection between the Interconnector's multiplexing node and other tariffed access services of the Telephone Company.

Customer(s)

The term "Customer(s)" denotes any individual, partnership, association, joint-stock company, trust, corporation, or governmental entity or other entity which subscribes to the services offered under this tariff, including both Interexchange Carriers (ICs) and End Users. See "Interconnector."

Customer Designated Premises

The term "Customer Designated Premises" denotes the premises specified by the customer for the provision of Access Service.

ACCESS SERVICE

2. General Regulations (Cont'd)

2.6 Definitions (Cont'd)

Customer Message

The term "Customer Message" used herein for Feature Group A Switched Access Service denotes a completed call over an interstate Feature Group A Switched Access Service. A completed call includes both completed calls originated to and terminated from a Feature Group A Switched Access Service. A customer message begins in the originating direction when the off-hook supervision provided by the premise of the ordering customer is received by Telephone Company recording equipment. A customer message begins in the terminating direction when answer supervision is received by Telephone Company recording equipment indicating the called party has answered. A customer message ends in the originating direction when disconnect supervision is received by Telephone Company recording equipment from the premise of the ordering customer. A customer message ends in the terminating direction when disconnect supervision is received by Telephone Company recording equipment from either the premise of the ordering customer or the called party.

The term "Customer Message" used herein for Feature Group C and D Switched Access Service denotes a completed interstate call originated by a customer's end user. A customer message begins when answer supervision from the premise of the ordering customer is received by Telephone Company recording equipment indicating that the called party has answered. A message ends when disconnect supervision is received by Telephone Company recording equipment from either the premise of the ordering customer or the customer's end user premise from which the call originated.

2. General Regulations (Cont'd)

2.6 Definitions (Cont'd)

Customer of Record

The term "Customer of Record" denotes the entity who is ultimately responsible for all aspects of the service.

Data Transmission (107 Type) Test Line

The term "Data Transmission (107 Type) Test Line" denotes an arrangement which provides for a connection to a signal source which provides test signals for one-way testing of data and voice transmission parameters.

Decibel

The term "Decibel" denotes a unit used to express relative difference in power, usually between acoustic or electric signals, equal to ten (10) times the common logarithm of the ratio of two signal powers.

ACCESS SERVICE

2. General Regulations (Cont'd)

2.6 Definitions (Cont'd)

Decibel Reference Noise C-Message Weighting

The term "Decibel Reference Noise C-Message Weighting" denotes noise power measurements with C-Message Weighting in decibels relative to a reference 1000 Hz tone of 90 dB below 1 milliwatt.

Decibel Reference Noise C-Message Referenced to 0

The term "Decibel Reference Noise C-Message Referenced to 0" denotes noise power in "Decibel Reference Noise C-Message Weighting" referred to or measured at a zero transmission level point.

Density Pricing Zone

The term "Density Pricing Zone" denotes the group of serving wire centers to which a serving wire center has been assigned for traffic density-related pricing of specific access services. Serving wire centers are assigned to a zone based upon traffic density. The rate for a specific service may differ between zones.

Detail Billing

The term "Detail Billing" denotes the listing of each message and/or rate element for which charges to a customer are due on a bill prepared by the Telephone Company.

Digital Switched 56 Service

A switched access optional feature available with Feature Group D Access, which provides for data transmission at up to 56 Kilobits per second.

Directory Assistance (Interstate)

The term "Directory Assistance" denotes the provision of telephone numbers by a Telephone Company operator when the operator location is accessed by a customer by dialing NPA + 555-1212 or 555-1212.

ACCESS SERVICE

2. General Regulations (Cont'd)

2.6 Definitions (Cont'd)

Directory Assistance Location (Interstate)

The term "Directory Assistance Location" denotes a Telephone Company office where telephone company equipment first receives the Directory Assistance call from the customer's end user and selects the first operator position to respond to the Directory Assistance call.

Direct-Trunked Transport

The term "Direct-Trunked Transport" denotes transport from the serving wire center (SWC) to the end office (EO) or from the SWC to the access tandem on circuits dedicated to the use of a single customer without switching at the tandem.

Dual Tone Multifrequency Address Signaling

The term "Dual Tone Multifrequency Address Signaling" denotes a type of signaling that is an optional feature of Switched Access Feature Group A. It may be utilized when Feature Group A is being used in the terminating direction (from the point of termination with the customer to the local exchange end office). An office arranged for Dual Tone Multifrequency Signaling would expect to receive address signals from the customer in the form of Dual Tone Multifrequency signals.

Echo Control

The term "Echo Control" denotes the control of reflected signals in a telephone transmission path.

Echo Path Loss

The term "Echo Path Loss" denotes the measure of reflected signal at a 4-wire point of interface without regard to the send and receive Transmission Level Point.

Echo Return Loss

The term "Echo Return Loss" denotes a frequency weighted measure of return loss over the middle of the voiceband (approximately 500 to 2500 Hz), where talker echo is most annoying.

ACCESS SERVICE

2. General Regulations (Cont'd)

2.6 Definitions (Cont'd)

Effective 2-Wire

The term "Effective 2-Wire" denotes a condition which permits the simultaneous transmission in both directions over a channel, but it is not possible to insure independent information transmission in both directions. Effective 2-wire channels may be terminated with 2-wire or 4-wire interfaces.

Effective 4-Wire

The term "Effective 4-Wire" denotes a condition which permits the simultaneous independent transmission of information in both directions over a channel. The method of implementing effective 4-wire transmission is at the discretion of the Telephone Company (physical, time domain, frequency-domain separation or echo cancellation techniques). Effective 4-wire channels may be terminated with a 2-wire interface at the customer's premises. However, when terminated 2-wire, simultaneous independent transmission cannot be supported because the two wire interface combines the transmission paths into a single path.

8XX

The term "8XX" denotes the toll free Service Access Codes (SAC). Along with the current toll free 800 and 888 SAC, 822, 833, 844, 855, 866 and 877 SACs have been reserved by the telecommunications industry for the expansion of toll free access service.

ACCESS SERVICE

2. General Regulations (Cont'd)

2.6 Definitions (Cont'd)

End Office Switch

The term "End Office Switch" denotes a local Telephone Company switching system where Telephone Exchange Service customer station loops are terminated for purposes of interconnection to trunks. Included are Remote Switching Modules and Remote Switching Systems served by a Host Central Office in a different wire center.

End User

The term "End User" means any customer of an interstate or foreign telecommunications service that is not a carrier, except that a carrier other than a telephone company shall be deemed to be an "end user" when such carrier uses a telecommunications service for administrative purposes, and a person or entity that offers telecommunications service exclusively as a reseller shall be deemed to be an "end user" if all resale transmissions offered by such reseller originate on the premises of such reseller.

Entrance Facilities

The term "Entrance Facilities" denotes Switched Access Service dedicated transport from the customer's point of demarcation to the serving wire center.

Entry Switch

See First Point of Switching

ACCESS SERVICE

2. General Regulations (Cont'd)

2.6 Definitions (Cont'd)

Envelope Delay Distortion

The term "Envelope Delay Distortion" denotes a measure of the linearity of the phase versus frequency of a channel.

Equal Level Echo Path Loss

The term "Equal Level Echo Path Loss" (ELEPL) denotes the measure of Echo Path Loss (EPL) at a 4-wire interface which is corrected by the difference between the send and receive Transmission Level Point (TLP). [ELEPL = EPL - TLP (send) + TLP (receive)]

Exchange

The term "Exchange" denotes a unit generally smaller than a local access and transport area, established by the Telephone Company for the administration of communications service in a specified area which usually embraces a city, town or village and its environs. It consists of one or more central offices together with the associated facilities used in furnishing communications service within that area. The exchange includes any Extended Area Service area that is an enlargement of a Telephone Company's exchange area to include nearby exchanges. One or more designated exchanges comprise a given local access and transport area.

ACCESS SERVICE

2. General Regulations (Cont'd)

2.6 Definitions (Cont'd)

Exit Message

The term "Exit Message" denotes an SS7 message sent to an end office by the Telephone Company's tandem switch to mark the Carrier Connect Time when the Telephone Company's tandem switch sends an Initial Address Message to an interexchange customer.

Expected Measured Loss

The term "Expected Measured Loss" denotes a calculated loss which specifies the end-to-end 1004-Hz loss on a terminated test connection between two readily accessible manual or remote test points. It is the sum of the inserted connection loss and test access loss including any test pads.

Extended Area Service

(See Definition of Exchange.)

ACCESS SERVICE

2. General Regulations (Cont'd)

2.6 Definitions (Cont'd)

Field Identifier

The term "Field Identifier" denotes two to four characters that are used on service orders to convey specific instructions. Field Identifiers may or may not have associated data. Selected Field Identifiers are used in Telephone Company billing systems to generate nonrecurring charges.

First Point of Switching

The term "First Point of Switching" denotes the first Telephone Company location at which switching occurs on the terminating path of a call proceeding from the customer premises to the terminating end office and, at the same time, the last Telephone Company location at which switching occurs on the originating path of a call proceeding from the originating end office to the customer premises.

Floor Space

The term "Floor Space" denotes an area in a Telephone Company serving wire center set aside for the exclusive use of an Interconnector purchasing Expanded Interconnection. See "Multiplexing Node."

Frequency Shift

The term "Frequency Shift" denotes the change in the frequency of a tone as it is transmitted over a channel.

Grandfathered

The term "Grandfathered" denotes Terminal Equipment, Multiline Terminating Systems and Protective Circuitry directly connected to the facilities utilized to provide services under the provisions of this tariff, and which are considered grandfathered under Part 68 of the F.C.C.'s Rules and Regulations.

Host Central Office

The term "Host Central Office" denotes an electronic switching unit containing the central call processing functions which service the Host Central Office and its Remote Switching Systems or Remote Switching Modules.

Host Office

The term "Host Office" denotes an electronic switching system which provides call processing capabilities for one or more Remote Switching Modules or Remote Switching Systems.

ACCESS SERVICE

2. General Regulations (Cont'd)

2.6 Definitions (Cont'd)

Hub Location

The term "Hub Location" denotes a Telephone Company designated serving Wire Center at which bridging or multiplexing functions are performed.

Hunt Group Arrangement

The term "Hunt Group Arrangement" denotes the ability to sequentially access one of two or more line side connections in the originating direction, when the access code of the line group is dialed.

Immediately Available Funds

The term "Immediately Available Funds" denotes a corporate or personal check drawn on a bank account and funds which are available for use by the receiving party on the same day on which they are received and include U.S. Federal Reserve bank wire transfers, U.S. Federal Reserve notes (paper cash), U.S. coins, U.S. Postal Money Orders and New York Certificates of Deposit.

Impedance Balance

The term "Impedance Balance" denotes the method of expressing Echo Return Loss and Singing Return Loss at a 4-wire interface whereby the gains and/or loss of the 4-wire portion of the transmission path, including the hybrid, are not included in the specification.

ACCESS SERVICE

2. General Regulations (Cont'd)

2.6 Definitions (Cont'd)

Impulse Noise

The term "Impulse Noise" denotes any momentary occurrence of the noise on a channel over a specified level threshold. It is evaluated by counting the number of occurrences which exceed the threshold.

Individual Case Basis

The term "Individual Case Basis" denotes a condition in which the regulations, if applicable, rates and charges for an offering under the provisions of this tariff are developed based on the circumstances in each case.

Initial Address Message

The term "Initial Address Message" denotes an SS7 message sent in the forward direction to initiate trunk set up, reserve an outgoing trunk and process the information about that trunk along with other data relating to the routing and handling of the call to the next switch.

Inserted Connection Loss

The term "Inserted Connection Loss" denotes the 1004 Hz power difference (in dB) between the maximum power available at the originating end and the actual power reaching the terminating end through the inserted connection.

Installation and Repair Technician

The term "Installation and Repair Technician" denotes a Telephone Company employee who performs installation and/or repair work, including testing and trouble isolation, outside of the Telephone Company Central Office and generally at the customer's designated premises. Included in this category would be Toll Radio Tech., Special Services Tech., Teletype Tech., and Combination Tech.

Interconnection Point

See Expanded Interconnection Service Interconnection Point;
See Multiple Company Interconnection Point.

ACCESS SERVICE

2. General Regulations (Cont'd)

2.6 Definitions (Cont'd)

Interexchange Carrier (IC) or Interexchange Common Carrier

The terms "Interexchange Carrier" (IC) or "Interexchange Common Carrier" denotes any individual, partnership, association, joint-stock company, trust, governmental entity or corporation engaged for hire in interstate or foreign communication by wire or radio, between two or more exchanges.

Intermodulation Distortion

The term "Intermodulation Distortion" denotes a measure of the nonlinearity of a channel. It is measured using four tones, and evaluating the ratios (in dB) of the transmitted composite four-tone signal power to the second-order products of the tones (R2), and the third-order products of the tones (R3).

Interstate Communications

The term "Interstate Communications" denotes both interstate and foreign communications.

Intrastate Communications

The term "Intrastate Communications" denotes any communications within a state subject to oversight by state regulatory commission as provided by the laws of the state involved.

ACCESS SERVICE

2. General Regulations (Cont'd)

2.6 Definitions (Cont'd)

Line Side Connection

The term "Line Side Connection" denotes a connection of a transmission path to the line side of a local exchange switching system.

Local Access and Transport Area

The term "Local Access and Transport Area" denotes a geographic area established for the provision and administration of communications service. It encompasses one or more designated exchanges, which are grouped to serve common social, economic and other purposes.

Local Tandem Switch

The term "Local Tandem Switch" denotes a local Telephone Company switching unit by which local or access telephonic communications are switched to and from an End Office Switch.

Loop Around Test Line

The term "Loop Around Test Line" denotes an arrangement utilizing a Telephone Company central office to provide a means to make certain two-way transmission tests on a manual basis. This arrangement has two central office terminations, each reached by means of separate telephone numbers and does not require any specific customer premises equipment. Equipment subject to this test arrangement is at the discretion of the customer.

ACCESS SERVICE

2. General Regulations (Cont'd)

2.6 Definitions (Cont'd)

Loss Deviation

The term "Loss Deviation" denotes the variation of the actual loss from the designed value.

Manhole

The term "Manhole" denotes an underground enclosure where conduit(s) are terminated and which provides ready access to conduit system.

Media Stimulated Mass Calling Events

The term "Media Stimulated Mass Calling Events" denotes the use of Switched Access Service for calls to 800, 900, etc. telephone numbers in response to television and radio advertising for which a substantial call volume is anticipated during a short period of time. Media stimulated mass calling is highly peaked and often used in conjunction with call counting services for public opinion polls, marketing surveys, etc.

Meet Point

See Multiple Company Interconnection Point.

Message

The term "Message" denotes a "call" as defined preceding.

ACCESS SERVICE

2. General Regulations (Cont'd)

2.6 Definitions (Cont'd)

Milliwatt (102 Type) Test Line

The term "Milliwatt (102 Type) Test Line" denotes an arrangement in an end office which provides a 1004 Hz tone at 0 dBm0 for one-way transmission measurements towards the customer's premises from the Telephone Company end office.

Multifrequency (MF) Address Signaling

The term "Multifrequency (MF) Address Signaling" denotes a signaling method in which a combination of two out of six voiceband frequencies are used to represent a digit or a control signal.

Multiple Company Interconnection Point

The term "Multiple Company Interconnection Point" denotes a point in the Telephone Company's territory where its facilities meet and connect with the facilities of another telephone company. This point is used in determining the Billing Percentages for access service.

ACCESS SERVICE

2. General Regulations (Cont'd)

2.6 Definitions (Cont'd)

National Security Emergency Preparedness (NSEP) Services

The term "National Security Emergency Preparedness (NSEP) Services" denotes telecommunications services which are used to maintain a state of readiness or to respond to and manage any event or crises (local, national or international), which causes or could cause injury or harm to the population, damage to or loss of property, or degrades or threatens the NSEP posture of the United States.

Network Control Signaling

The term "Network Control Signaling" denotes the transmission of signals used in the telecommunications system which perform functions such as supervision (control, status, and charge signals), address signaling (e.g., dialing), calling and called number identifications, rate of flow, service selection error control and audible tone signals (call progress signals indicating re-order or busy conditions, alerting, coin denominations, coin collect and coin return tones) to control the operation of the telecommunications system.

Non-Primary Residential Line

The term "Non-Primary Residential Line" denotes any residential subscriber line(s) that are in addition to a Primary Residential Line associated with a unique customer account at a single premise.

Nonsynchronous Test Line

The term "Nonsynchronous Test Line" denotes an arrangement in step-by-step end offices which provides operational tests which are not as complete as those provided by the synchronous test lines, but can be made more rapidly.

North American Numbering Plan

The term "North American Numbering Plan" denotes a three-digit area (Numbering Plan Area) code and a seven-digit telephone number made up of a three-digit Central Office code plus a four-digit station number.

NSEP Treatment

The term "NSEP Treatment" denotes the provisioning of a telecommunications service before others based on the provisioning priority level assigned by the Executive Office of the President.

ACCESS SERVICE

2. General Regulations (Cont'd)

2.6 Definitions (Cont'd)

Off-hook

The term "Off-hook" denotes the active condition of Switched Access or a Telephone Exchange Service line.

On-Hook

The term "On-hook" denotes the idle condition of Switched Access or a Telephone Exchange Service line.

Open Circuit Test Line

The term "Open Circuit Test Line" denotes an arrangement in an end office which provides an ac open circuit termination of a trunk or line by means of an inductor of several Henries.

Originating Direction

The term "Originating Direction" denotes the use of access service for the origination of calls from an End User Premises to an IC Premises.

OZZ Digits

The term "OZZ Digits" denotes the domestic call type (e.g., 1+), and thus the specific trunk group onto which a particular call should be routed.

Pay Telephone

The term "Pay Telephone" denotes Telephone Company provided instruments and related facilities that are available to the general public for public convenience and necessity, including public and semipublic telephones, and coinless telephones.

Permanent Virtual Circuit (PVC)

The term “Permanent Virtual Circuit” denotes a virtual circuit that provides the equivalent of a dedicated private line service.

Phase Jitter

The term "Phase Jitter" denotes the unwanted phase variations of a signal.

ACCESS SERVICE

2. General Regulations (Cont'd)

2.6 Definitions (Cont'd)

Point of Termination

The term "Point of Termination" denotes the point of demarcation within a customer-designated premises at which the Telephone Company's responsibility for the provision of Access Service ends.

Premises

The term "Premises" denotes a building or buildings on continuous property (except Railroad Right-of-Way, etc.) not separated by a public highway.

Primary Residential Line

The term "Primary Residential Line" denotes a residential subscriber line associated with a unique customer account at a single premise, which constitutes any, or all, of the following: the only subscriber line, the first installed subscriber line, and the subscriber line designated by a new customer account through the service ordering process.

Query

The term "Query" denotes the inquiry to a data base to obtain information, processing instructions or service data.

Rate Zone

See Density Pricing Zone.

Release Message

The term "Release Message" denotes an SS7 Message sent in either direction to indicate that a specific circuit is being released.

Remote Switching Modules

The term "Remote Switching Modules and/or Remote Switching Systems" denotes small, remotely controlled electronic end office switches which obtain their call processing capability from an ESS-type Host Office. The Remote Switching Modules and/or Remote Switching Systems cannot accommodate direct trunks to an IC.

Return Loss

The term "Return Loss" denotes a measure of the similarity between the two impedances at the junction of two transmission paths. The higher the return loss, the higher the similarity.

Registered Equipment

The term "Registered Equipment" denotes the customer's premises equipment which complies with and has been approved within the Registration Provisions of Part 68 of the F.C.C.'s Rules and Regulations.

ACCESS SERVICE

2. General Regulations (Cont'd)

2.6 Definitions (Cont'd)

Service Access Code SAC

The term "Service Access Code" denotes a 3 digit code in the NPA format which is used as the first three digits of a 10 digit address and which is assigned for special network uses. Whereas NPA codes are normally used for identifying specific geographical areas, certain Service Access Codes have been allocated in the North American Numbering Plan to identify generic services or to provide access capability. Examples of Service Access Codes include the 500, 700, 800 and 900 codes.

Service Switching Point (SSP)

A Service Switching Point denotes an end office or tandem which, in addition to having SS7 and SP capabilities, is also equipped to query centralized data bases.

Serving Wire Center

The term "Serving Wire Center" denotes the wire center from which the customer designated premises would normally obtain dial tone from the Telephone Company.

Seven Digit Manual Test Line

The term "Seven Digit Manual Test Line" denotes an arrangement which allows the Customer to select balance, milliwatt and synchronous test lines by manually dialing a seven digit number over the associated access connection.

Shortage of Facilities or Equipment

The term "Shortage of Facilities or Equipment" denotes a condition which occurs when the Telephone Company does not have appropriate cable, switching capacity, bridging or, multiplexing equipment, etc., necessary to provide the Access service requested by the customer.

Short Circuit Test Line

The term "Short Circuit Test Line" denotes an arrangement in an end office which provides for an ac short circuit termination of a trunk or line by means of a capacitor of at least four microfarads.

Signal-to-C-Notched Noise Ratio

The term "Signal-to-C-Notched Noise Ratio" denotes the ratio in dB of a test signal to the corresponding C-Notched Noise.

ACCESS SERVICE

2. General Regulations (Cont'd)

2.6 Definitions (Cont'd)

Signaling Point (SP)

The term "Signaling Point (SP)" denotes an SS7 network interface element capable of originating and terminating SS7 trunk signaling messages.

Signaling System 7 (SS7)

The term "Signaling System 7 (SS7)" denotes the layered protocol used for standardized common channel signaling in the United States and Puerto Rico.

Signal Transfer Point (STP)

The term "Signal Transfer Point (STP)" denotes a packet switch which provides access to the Telephone Company's SS7 network and performs SS7 message signal routing and screening.

Signal Transfer Point (STP) Port

The term "Signal Transfer Point (STP) Port" denotes the point of termination and interconnection to the STP.

ACCESS SERVICE

2. General Regulations (Cont'd)

2.6 Definitions (Cont'd)

Singing Return Loss

The term "Singing Return Loss" denotes the frequency weighted measure of return loss at the edges of the voiceband (200 to 500 Hz and 2500 to 3200 Hz), where singing (instability) problems are most likely to occur.

Subtending End Office of an Access Tandem

The term "Subtending End Office of an Access Tandem" denotes an end office that has final trunk group routing through that tandem.

Synchronous Test Line

The term "Synchronous Test Line" denotes an arrangement in an end office which performs marginal operational tests of supervisory and ring-tripping functions.

Tandem-Switched Transport

The term "Tandem-Switched Transport" denotes transport from the serving wire center (SWC) to the end office (EO) or from the tandem to the EO that is switched at a tandem switch. Tandem-switched transport between a SWC and an EO consists of circuits dedicated to the use of a single customer from the SWC to the tandem (although this dedicated link will not exist if the SWC and the tandem are located in the same place) and circuits used in common by multiple customers from the tandem to the EO.

Telecommunications Service Priority (TSP) System

The term "Telecommunications Service Priority (TSP) System" or "TSP System" or "NSEP TSP System" refers to the regulatory, administrative and operational system authorizing and providing for priority treatment (i.e., the provisioning and restoration) of NSEP Services.

ACCESS SERVICE

2. General Regulations (Cont'd)

2.6 Definitions (Cont'd)

Telecommunications Service Provider

The term "Telecommunications Service Provider" denotes interexchange carriers, operator service providers, enhanced service providers, and any other providers of telecommunications services.

Terminating Direction

The term "Terminating Direction" denotes the use of Access Service for the completion of calls from an IC premise to an End User Premise.

Third Party Call

The term "Third Party Call" denotes a call for which the calling party requests the interexchange carrier to bill the call to the line number of the third party.

2. General Regulation (Cont'd)

2.6 Definitions (Cont'd)

Transmission Measuring (105 Type) Test Line/Responder

The term "Transmission Measuring (105 Type) Test Line/Responder" denotes an arrangement in an end office which provides far-end access to a responder and permits two-way loss and noise measurements to be made on trunks from a near end office.

Transmission Path

The term "Transmission Path" denotes an electrical path capable of transmitting signals within the range of the service offering, e.g., a voice grade transmission path is capable of transmitting voice frequencies within the approximate range of 300 to 3000 Hz. A transmission path is comprised of physical or derived facilities consisting of any form or configuration of plant typically used in the telecommunications industry.

Trunk

The term "Trunk" denotes a communications path connecting two switching systems in a network, used in the establishment of an end-to-end connection.

Trunk Group

The term "Trunk Group" denotes a set of trunks which are traffic engineered as a unit for the establishment of connections between switching systems in which all of the communications paths are interchangeable.

Trunk Side Connection

The term "Trunk Side Connection" denotes the connection of a transmission path to the trunk side of a local exchange switching system.

2. General Regulations (Cont'd)

2.6 Definitions (Cont'd)

Two-Wire to Four-Wire Conversion

The term "Two-Wire to Four-Wire Conversion" denotes an arrangement which converts a four-wire transmission path to a two-wire transmission path to allow a four-wire facility to terminate in a two-wire entity (e.g., a central office switch).

Uniform Service Order Code

The term "Uniform Service Order Code" denotes a three or five character alphabetic, numeric, or an alphanumeric code that identifies a specific item of service or equipment. Uniform Service Order Codes are used in the Telephone Company billing system to generate recurring rates and nonrecurring charges.

V and H Coordinates Method

The term "V and H coordinates Method" denotes a method of computing airline miles between two points by utilizing an established formula which is based on the vertical and horizontal coordinates of the two points.

WATS Serving Office

The term "WATS Serving Office" denotes a Telephone Company designated serving wire center where switching, screening and/or recording functions are performed in connection with the closed-end of WATS or WATS-type services.

Wire Center

The term "Wire Center" denotes a building in which one or more central offices, used for the provision of Telephone Exchange Services, are located.

ACCESS SERVICE

3. Carrier Common Line Access Service

The Telephone Company will provide Carrier Common Line Access Service (Carrier Common Line Access) to customers in conjunction with Switched Access Service provided in Section 6. of this tariff.

3.1 General Description

Carrier Common Line Access provides for the use of end users' Telephone Company provided common lines by customers for access to such end users to furnish Interstate Communications.

Premium Access is (1) Switched Access Service provided to customers under this tariff which furnish interstate MTS/WATS, and (2) Switched Access Service in an end office converted to equal access.

ACCESS SERVICE

3. Carrier Common Line Access Service (Cont'd)

3.2 Limitations

3.2.1 Exclusions

Neither a telephone number nor detail billing are provided with Carrier Common Line Access. Additionally, directory listings and intercept arrangements are not included in the rates and charges for Carrier Common Line Access.

3.2.2 Access Groups

All trunk side connections provided in the same access group will be limited to the same features and operating characteristics.

3.2.3 WATS Access Lines

Where Switched Access Services are connected with Special Access Services at Telephone Company Designated WATS Serving Offices for the provision of WATS or WATS-type Services, Switched Access Service minutes which are carried on that end of the service (i.e., originating minutes for outward WATS and WATS-type services and terminating minutes for inward WATS and WATS-type services) shall not be assessed Carrier Common Line Access per minute charges with the following exception.

ACCESS SERVICE

3. Carrier Common Line Access Service (Cont'd)

3.3 Undertaking of the Telephone Company

3.3.1 Provision of Service

Where the customer is provided Switched Access Service under Section 6 of this tariff, the Telephone Company will provide the use of Telephone Company common lines by a customer for access to end users at rates and charges as set forth in 3.9.1 following.

3.3.2 Interstate and Intrastate Use

The Switched Access Service provided by the Telephone Company includes the Switched Access Service provided for both inter state and intrastate communications. The Carrier Common Line Access rates and charges as set forth in 3.9.1 following apply to interstate Switched Access Service access minutes in accordance with the rate regulations as set forth in 3.8.4 following (Percent Interstate Use - PIU).

3.4 Obligations of the Customer

3.4.1 Switched Access Service Requirement

The Switched Access Service associated with Carrier Common Line Access shall be ordered by the customer under other sections of this tariff.

3.4.2 Supervision

The customer facilities at the premises of the ordering customer shall provide the necessary on-hook and off-hook supervision.

ACCESS SERVICE

3. Carrier Common Line Access Service (Cont'd)

3.5 Determination of Usage Subject to Carrier Common Line Access Charges

Except as set forth herein, all Switched Access Service provided to the customer will be subject to Carrier Common Line Access charges.

3.5.1 Determination of Jurisdiction

When the customer reports interstate and intrastate use of Switched Access Service, the associated Carrier Common Line Access used by the customer for interstate will be determined as set forth in 3.8.4 following (Percent Interstate Use-PIU).

3.5.2 Cases Involving Usage Recording By the Customer

Where Feature Group C end office switching is provided with out Telephone Company recording and the customer records minutes of use used to determine Carrier Common Line Access charges (i.e., Feature Group C operator and calls such as pay telephone send-paid, operator-DDD, operator-person, collect, credit-card, third number and/or other like calls), the customer shall furnish such minutes of use detail to the Telephone Company in a timely manner. If the customer does not furnish the data, the customer shall identify all Switch ed Access Services which could carry such calls in order for the Telephone Company to accumulate the minutes of use through the use of special Telephone Company measuring and recording equipment.

ACCESS SERVICE

3. Carrier Common Line Access Service (Cont'd)

3.5 Determination of Usage Subject to Carrier Common Line Access Charges (Cont'd)

3.5.3 Local Exchange Access and Enhanced Service Exemption

When access to the local exchange is required to provide a customer service (e.g., MTS/WATS-type, telex, Data, etc.) that uses a resold Special Access Service, Switched Access Service Rates and Regulations, as set forth in Section 6. following will apply, except when such access to the local exchange is required for the provision of an enhanced service. Carrier Common Line Access rates and charges as set forth in 3.9.1 following apply in accordance with the resale rate regulations as set forth in 3.6.4 following.

3.6 Resold Services

3.6.1 Scope

Where the customer is reselling MTS and/or MTS-type service(s) on which the Carrier Common Line and Switched Access charges have been assessed, the customer may, at the option of the customer, obtain Feature Group D Switched Access Service under this tariff as set forth in Section 6. following for originating and/or terminating access in the local exchange. Such access group arrangements whether single lines or trunks or multiline hunt groups or trunk groups will have Carrier Common Line Access charges applied as set forth in 3.9.1 following in accordance with the resale rate regulations set forth in 3.6.4 following. For purposes of administering this provision:

Resold interstate terminating MTS and MTS-type service(s) shall include collect calls, third number calls and credit card calls where the reseller pays the underlying carrier's service charges; and shall not include intrastate minutes of use.

Resold interstate originating MTS and MTS-type service(s) shall not include collect, third number, credit card or intrastate minutes of use.

ACCESS SERVICE

3. Carrier Common Line Access Service (Cont'd)

3.6 Resold Services (Cont'd)

3.6.2 Customer Obligations Concerning the Resale of MTS and MTS-type Services

When the customer is reselling MTS and/or MTS-type service as set forth in 3.6.1 preceding, the customer will be charged Carrier Common Line Access charges in accordance with the resale rate regulations as set forth in 3.6.4 following if the customer or the provider of the MTS service furnishes documentation of the MTS usage and/or the customer furnishes documentation of the MTS-type usage. Such documentation supplied by the customer shall be supplied each month and shall identify the involved resold MTS and/or MTS-type services.

The monthly period used to determine the minutes of use for resold MTS and/or MTS-type service(s) shall be the most recent monthly period for which the customer has received a bill for such resold service(s). This information shall be delivered to the Telephone Company, at a location specified by the Telephone Company, no later than 15 days after the bill date shown on the resold MTS and/or MTS-type service bill. If the required information is not received by the Telephone Company, the previously reported information, as described preceding, will be used for the next two months. For any subsequent month, no allocation or credit will be made until the required documentation is delivered to the Telephone Company by the customer.

ACCESS SERVICE

3. Carrier Common Line Access Service (Cont'd)

3.6 Resold Services (Cont'd)

3.6.3 Resale Documentation Provided By the Customer

When the customer utilizes Switched Access Service as set forth in 3.6.2 preceding, the Telephone Company may request a certified copy of the customer's resold MTS or MTS-type usage billing from either the customer or the provider of the MTS or MTS-type Service. Requests for billing will relate back no more than 12 months prior to the current billing period.

ACCESS SERVICE

3. Carrier Common Line Access Service (Cont'd)

3.6 Resold Services (Cont'd)

3.6.4 Rate Regulations Concerning the Resale of MTS and MTS-type Services

When the customer is provided an access group to be used in conjunction with the resale of MTS and/or MTS-type services as set forth in 3.6.1 preceding, subject to the limitations as set forth in 3.2 preceding, and the billing entity receives the usage information required as set forth in 3.6.2 preceding, to calculate the adjustment of Carrier Common Line Access charges, the customer will be billed as set forth in (D), (E) or (F) following, depending upon, respectively, whether the usage is from non-equal access offices, equal access offices or a combination of the two.

(A) Apportionment and Adjustment of Resold Minutes of Use

When the customer is provided with more than one access group in a LATA in association with the resale of MTS and/or MTS-type services, the resold minutes of use will be apportioned as follows:

(1) Originating Services

The Telephone Company will apportion the resold originating MTS and/or MTS-type services and originating minutes of use for which the resale credit adjustment applies, among the access groups. Such apportionment will be based on the relationship of the originating usage for each access group to the total originating usage for all access groups in the LATA. For purposes of administering this provision:

ACCESS SERVICE

3. Carrier Common Line Access Service (Cont'd)

3.6 Resold Services (Cont'd)

3.6.4 Rate Regulations Concerning the Resale of MTS and MTS-type Services (Cont'd)

(A) Apportionment and Adjustment of Resold Minutes of Use (Cont'd)

(1) Originating Services (Cont'd)

Resold originating MTS and/or MTS-type services minutes shall be only those attributable to interstate originating MTS and/or MTS-type minutes and shall not include collect, third number, credit card or intrastate minutes of use.

The resale credit adjustment shall apply for resold originating MTS and MTS-type services and minutes of use, provided Carrier Common Line and Switched Access Charges have been assessed on such services.

(2) Terminating Services

The Telephone Company will apportion the resold terminating MTS and/or MTS-type services and terminating minutes of use for which the resale credit adjustment applies, among the access groups. Such apportionment will be based on the relationship of the terminating usage for each access group to the total terminating usage for all access groups in the LATA. For purposes of administering this provision:

Resold terminating MTS and/or MTS-type services minutes shall be only those attributable to interstate terminating MTS/MTS-type (i.e., collect calls, third number calls, and credit card calls) and shall not include intrastate minutes of use or MTS/MTS-type minutes of use paid for by another party.

The resale credit adjustment shall apply for resold terminating MTS and MTS-type services and minutes of use, provided Carrier Common Line and Switched Access Charges have been assessed on such services.

ACCESS SERVICE

3. Carrier Common Line Access Service (Cont'd)

3.6 Resold Services (Cont'd)

3.6.4 Rate Regulations Concerning the Resale of MTS and MTS-type Services (Cont'd)

(B) Same State/Telephone Company/Exchange Limitation

In order for the rate regulations to apply as set forth in (D), (E) or (F) following, the access groups and the resold MTS and/or MTS-type services must be provided in the same state (except when the same extended area service arrangement is provided in two different states by the same telephone company) in the same exchange, provided by the same Telephone Company and connected directly or indirectly. For those exchanges that encompass more than one state, the customer shall report the information by state within the exchange.

ACCESS SERVICE

3. Carrier Common Line Access Service (Cont'd)

3.6 Resold Services (Cont'd)

3.6.4 Rate Regulations Concerning the Resale of MTS and MTS-type Services (Cont'd)

(C) Direct and Indirect Connections

Each of the access group arrangements used by the customer in association with the resold MTS and/or MTS-type services must be connected either directly or indirectly to the customer designated premises at which the resold MTS and/or MTS-type services are terminated. Direct connections are those arrangements where the access groups and resold MTS and/or MTS-type services are terminated at the same customer designated premises.

Indirect originating connections are those arrangements where the access groups and the resold originating MTS and/or MTS-type services are physically located at different customer designated premises in the same exchange. Such different customer designated premises are connected by facilities that permit a call to flow from access groups to resold MTS and/or MTS-type services.

Indirect terminating connections are those arrangements where the access groups and resold terminating MTS and/or MTS-type services are physically located at different customer designated premises in the same exchange. Such different customer designated premises are connected by facilities that permit a call to flow from resold terminating MTS and/or MTS-type services to access groups.

ACCESS SERVICE

3. Carrier Common Line Access Service (Cont'd)

3.6 Resold Services (Cont'd)

3.6.4 Rate Regulations Concerning the Resale of MTS and MTS-type Services (Cont'd)

(D) Not Applicable

ACCESS SERVICE

3. Carrier Common Line Access Service (Cont'd)

3.6 Resold Services (Cont'd)

3.6.4 Rate Regulations Concerning the Resale of MTS and MTS-type Services (Cont'd)

(E) Access Groups - Equal Access Offices Only

When all the usage on an access group originates from and/or terminates at end offices that have been converted to equal access, the Premium Access Charge per minute as set forth in 3.9.1 following will apply. The minutes billed Carrier Common Line Access charges will be the adjusted originating interstate access minutes and the adjusted terminating interstate access minutes for such access groups.

The adjusted originating access minutes will be the originating interstate access minutes less the reported resold originating MTS and/or MTS-type service minutes of use as set forth in (A)(1) preceding; but not less than zero. The adjusted terminating access minutes will be the terminating interstate access minutes less the reported resold terminating MTS and/or MTS-type service minutes of use as set forth in (A)(2) preceding; but not less than zero.

ACCESS SERVICE

3. Carrier Common Line Access Service (Cont'd)

3.6 Resold Services (Cont'd)

3.6.4 Rate Regulations Concerning the Resale of MTS and MTS-type Services (Cont'd)

(F) Access Groups - Non-Equal Access and Equal Access Offices

When an access group has usage that originates from and/or terminates at both end offices that have been converted to equal access and end offices that have not been converted, both premium and non-premium per minute charges as set forth in 3.9.1 following will apply respectively. The minutes billed Carrier Common Line Access Service charges will be the adjusted originating interstate access minutes plus the adjusted terminating interstate access minutes for such access groups.

The adjusted originating access minutes will be the originating interstate access minutes less the reported resold originating MTS and/or MTS-type service minutes of use as set forth in (A)(1) preceding; but not less than zero. The adjusted terminating access minutes will be the terminating interstate access minutes less the reported resold terminating MTS and/or MTS-type service minutes of use as set forth in (A)(2) preceding; but not less than zero.

ACCESS SERVICE

3. Carrier Common Line Access Service (Cont'd)

3.6 Resold Services (Cont'd)

3.6.4 Rate Regulations Concerning the Resale of MTS and MTS-type Services (Cont'd)

(G) When the Adjustment Will Be Applied to Customer Bills

The adjustment as set forth in (D), (E) and (F) preceding will be made to the involved customer account no later than either the next bill date, or the one subsequent to that, depending on when the usage report is obtained.

(H) Conversion of Billed Usage to Minutes

When the MTS and/or MTS-type usage is shown in hours, the number of hours shall be multiplied by 60 to develop the associated MTS and/or MTS-type minutes of use. If the MTS and/or MTS-type usage is shown in a unit that does not show hours or minutes, the customer shall provide a factor to convert the shown units to minutes.

(I) Percent Interstate Use (PIU)

The adjustment as set forth in (D), (E) and (F) preceding will be made to the involved customer account after making the adjustments to the customer account as set forth in 3.8.4 following (PIU).

ACCESS SERVICE

3. Carrier Common Line Access Service (Cont'd)

3.7 Coin Services

3.7.1 Collection and Remittance of Coin Station Monies

When the customer is provided Operator Trunk-Coin or Combined Coin and Non-Coin or Operator Trunk-Full Feature Optional Features for sent-paid pay telephone access as set forth in Section 6. following, the Telephone Company will collect sent-paid monies from pay telephone stations and will remit monies to the customer as set forth in 3.7.3 following. The Telephone Company will provide message call detail format and bill periods used to determine the monies upon request from the customer.

3.7.2 Provision of Message Call Detail Concerning Coin Station Monies

Where Operator Trunk-Coin or Combined Coin and Non-Coin or Operator Trunk-Full Feature Optional Features for sent-paid pay telephone access is provided to the customer and the customer wishes to receive the monies it is due for the monies collected by the Telephone Company from coin pay telephone stations, the customer shall furnish to the Telephone Company, at a location specified by the Telephone Company, the customer message call detail for the customer sent-paid (coin) pay telephone calls in accordance with the Telephone Company collection schedule. The customer message call detail furnished shall be in a standard format established by the Telephone Company. The Telephone Company will provide to the customer the precise details of the required standard format. If, in the course of Telephone Company business, it is necessary to change the standard format, the Telephone Company will provide notification to the involved customer six months prior to the change. If no customer message call detail is received from the customer for each bill period established by the Telephone Company, the Telephone Company will assume there were no customer sent-paid (coin) pay telephone calls for the period. In addition, the customer shall furnish a schedule of its charges for sent-paid (coin) calls to the Telephone Company at a location and date as specified by the Telephone Company. Any change in the customer's schedule of charges shall be furnished to the Telephone Company one day after the change becomes effective.

ACCESS SERVICE

3. Carrier Common Line Access Service (Cont'd)

3.7 Coin Services (Cont'd)

3.7.3 Payment of Coin Sent-Paid Monies

The Telephone Company will collect the monies from coin pay telephone stations and will determine and remit amounts due to a customer which is provided Operator Trunk-Coin or Combined Coin and Non-Coin or Operator Trunk-Full Feature Optional Features for sent-paid pay telephone access as set forth in Section 6. as follows:

(A) Bill Period Coin Revenue

The Telephone Company will establish a collection schedule for each coin pay telephone station and will collect the monies from the coin pay stations based on this collection schedule. The monies collected based on this schedule during each bill period established by the Telephone Company will be identified by coin pay telephone station and summed to develop the Bill Period Coin Revenue for each coin record day (i.e., the day a record is prepared and dated to show the amount due the customer).

(B) Total Customer Coin Revenue

The interstate Total Customer Coin Revenue will be determined by the Telephone Company based on the customer message call detail received from the customer for each bill period and the customer's schedule of charges for sent-paid coin calls. Such Total Customer Coin Revenue will be developed each coin record day.

ACCESS SERVICE

3. Carrier Common Line Access Service (Cont'd)

3.7 Coin Services (Cont'd)

3.7.3 Payment of Coin Sent-Paid Monies (Cont'd)

(C) Recourse Adjustments

For each coin record day, the Telephone Company will subtract from the Total Customer Coin Revenue an amount for coin station shortages. Coin station shortages are amounts resulting from unauthorized calling at coin pay telephone stations, use of unauthorized coins (i.e., foreign coins, slugs and improper use of U.S. pennies), unauthorized removal of coins from coin pay telephone stations and coin refunds beyond the Telephone Company's control. Such amount for coin station shortages will be developed by the Telephone Company by multiplying the Total Customer Coin Revenue for each coin record day by a shortage factor. Such amount will be rounded to the nearest penny. The shortage factor will be determined by dividing the yearly total coin shortage amount by the yearly total coin revenue amount (i.e., total coin revenue equals the coin revenue due under exchange tariffs, state toll tariffs, and interstate toll tariffs). The total coin shortage amount and the total revenue amount will be determined by the Telephone Company through an annual special study.

(D) Payment of Net Customer Coin Revenue

The Telephone Company will determine the Net Customer Coin Revenue for each coin record day by subtracting from the Total Customer Coin Revenue determined as set forth in (B) preceding the amount for coin station shortages determined as set forth in (C) preceding. On the date (payment date) determined by adding 45 days to the coin record day, the Telephone Company will remit payment to the customer for the Net Customer Coin Revenue.

ACCESS SERVICE

3. Carrier Common Line Access Service (Cont'd)

3.7 Coin Services (Cont'd)

3.7.3 Payment of Coin Sent-Paid Monies (Cont'd)

(E) Audit Provisions

Upon reasonable written notice by the customer to the Telephone Company, the customer shall have the right through its authorized representative to examine and audit, during normal business hours and at reasonable intervals as determined by the Telephone Company, all such records and accounts as may under recognized accounting practices contain information bearing upon the determination of the amount payable to the customer. Adjustment shall be made by the proper party to compensate for any errors or omissions disclosed by such examination or audit. Neither such right to examine and audit nor the right to receive such adjustment shall be affected by any statement to the contrary, appearing on checks or otherwise, unless such statement expressly waiving such right appears in a letter signed by the authorized representative of the party having such right and delivered to the other party.

All information received or reviewed by the customer or its authorized representative is to be considered confidential and is not to be distributed, provided or disclosed in any form to anyone not involved in the audit, nor is such information to be used for any other purpose.

ACCESS SERVICE

3. Carrier Common Line Access Service (Cont'd)

3.8 Rate Regulations

3.8.1 Billing of Charges

Carrier Common Line charges will be billed to each Switched Access Service provided under this tariff in accordance with the regulations as set forth in 3.8.5 following (Determination of Premium and Non-Premium Charges) except as set forth in 3.6.4 preceding (Resale) and 3.8.4 following (PIU).

3.8.2 Measuring and Recording of Call Detail

When access minutes are used to determine Carrier Common Line charges, they will be accumulated using call detail recorded by Telephone Company equipment except as set forth in 3.8.3 following (Unmeasured FGA and B Usage) and Feature Group C operator and automated operator services systems call detail such as pay telephone sent-paid, operator-DDD, operator- person, collect, credit-card, third number and/or other like calls recorded by the customer. The Telephone Company measuring and recording equipment, except as set forth in 3.8.3 following (Unmeasured FGA and B Usage), will be associated with end office or local tandem switching equipment and will record each originating and terminating access minute where answer supervision is received. The accumulated access minutes will be summed on a line by line basis, by line group or by end office, whichever type of account is used by the Telephone Company, for each customer and then rounded to the nearest minute.

ACCESS SERVICE

3. Carrier Common Line Access Service (Cont'd)

3.8 Rate Regulations (Cont'd)

3.8.3 Percent Interstate Use (PIU)

When the customer reports interstate and intrastate use of in-service Switched Access Service, Carrier Common Line charges will be billed only to interstate Switched Access Service access minutes based on the data reported by the customer as set forth in 2.3.10 preceding (Jurisdictional Reports), except where the Telephone Company is billing according to actuals by jurisdiction. Interstate Switched Access Service access minutes will, after adjustment as set forth in 3.6.4 preceding (Resale), when necessary, be used to determine Carrier Common Line Charges as set forth in 3.8.5 following.

ACCESS SERVICE

3. Carrier Common Line Access Service (Cont'd)

3.8 Rate Regulations (Cont'd)

3.8.4 Determination of Premium and Non-Premium Charges

After the adjustments as set forth in 3.6.4 and 3.8.4 preceding have been applied, when necessary, to Switched Access Service access minutes, charges for the involved customer account will be determined as follows:

(A) Access minutes for all premium rated Switched Access Service subject to Carrier Common Line charges will be multiplied by the Premium Access per minute rate as set forth in 3.9.1 following.

(B) Carrier Common Line charges shall not be reduced as set forth in 3.6.1 preceding unless Switched Access Charges, as set forth in Section 6. following, are applied to the customer's Switched Access Services.

(C) Terminating Premium Access or Non-Premium Access, per minute charge(s) apply to:

- all terminating access minutes of use;

- all originating access minutes of use associated with FGA Access Services where the off-hook supervisory signaling is forwarded by the customer's equipment when the called party answers;

- all originating access minutes of use associated with calls placed to 500, 700, 8XX and 900 numbers, less those originating access minutes of use associated with calls placed to 500, 700, 8XX and 900 numbers for which the customer furnishes for each month a report of either the number of calls or minutes or a report of the percent of calls or minutes that terminate in a Switched Access Service that is assessed Carrier Common Line charges.

ACCESS SERVICE

3. Carrier Common Line Access Service (Cont'd)

3.8 Rate Regulations (Cont'd)

3.8.4 Determination of Premium and Non-Premium Charges (Cont'd)

(C) (Cont'd)

When the customer makes this report available to the Telephone Company in advance of billing, these minutes of use will be charged on the current bill as originating minutes of use as set forth in (E) following. If a billing dispute arises concerning the customer provided report, the Telephone Company will request the customer to provide the data the customer used to develop the report. The Telephone Company will not request such data more than once a year. The customer shall supply the data within 30 days of the Telephone Company request.

When this report is not available to the Telephone Company until after billing, it shall be used by the Telephone Company to calculate and post a credit to the customer's account. The credit shall be posted to the customer's account within 30 days of receipt of the report. The credit shall be calculated by multiplying the number of access minutes of use, for which a credit is determined to be applicable, times the difference between the terminating and originating Carrier Common Line charges in effect when the calls were completed.

ACCESS SERVICE

3. Carrier Common Line Access Service (Cont'd)

3.8 Rate Regulations (Cont'd)

3.8.4 Determination of Premium and Non-Premium Charges (Cont'd)

(D) The originating Premium Access or Non-Premium Access, per minute charge(s) apply to:

- all originating access minutes of use;

- less those originating access minutes of use associated with FGA Access Services where the off-hook supervisory signaling is forwarded by the customer's equipment when the called party answers;

- less all originating access minutes of use associated with calls placed to 500, 700, 8XX and 900 numbers;

- plus all originating access minutes of use associated with calls placed to 500, 700, 8XX and 900 numbers for which the customer furnishes for each month a report of either the number of calls or minutes or a report of the percent of calls or minutes that terminate in a Switched Access Service that is assessed Carrier Common Line charges, and for which a corresponding reduction in the number of terminating access minutes of use has been made as set forth in (D) preceding.

3.8.5 Presubscribed Interexchange Carrier Charge (PICC)

The PICC is a flat-rate, per-line monthly charge, as set forth in 3.9.2 following, assessed upon the subscriber's presubscribed interexchange carrier to recover the common line costs that cannot be recovered through the end user common line charge (EUCL) as provided in Section 4 following.

If an end user subscriber does not have a presubscribed interexchange carrier, the company may collect the PICC directly from the end user subscriber.

ACCESS SERVICE

3. Carrier Common Line Access Service (Cont'd)

3.8 Rate Regulations (Cont'd)

3.8.5 Presubscribed Interexchange Carrier Charge (PICC) (Cont'd)

When an end user is provided a single local business exchange service in a state, semi-public service included, and when this local business exchange service is provided under the general and/or local exchange service tariffs, the PICC Single Line Business rate as set forth in 3.9.2 following, applies to each such business individual line or trunk.

When an end user is provided more than one local business exchange service in a state by the same Telephone Company, semi-public service included, and when a local exchange service is provided under the general and/or local exchange service tariffs, the PICC - Multiline Business rate as set forth in 3.9.2 following, applies to each such Multiline Business individual line or trunk.

The PICC for ISDN Primary Rate Service (PRS) shall be five (5) times the Multiline Business rate, as set forth in 3.9.2 following.

The PICC for ISDN Basic Rate Service (BRS) shall be applied at the appropriate Non-Primary Residence or Multiline Business rate as set forth in 3.9.2 following.

The PICC for Business Centrex Service for subscribers with less than nine (9) lines shall be one multiline business PICC assessed on a per-line basis, as set forth in 3.9.2 following. Business Centrex Service customers with nine (9) or more lines will be assessed a PICC charge at a rate equal to one-ninth the PICC for multiline business lines, as set forth in 3.9.2 following.

The PICC for Residential Centrex (or Centrex Dorm) service shall be applied at the primary residence rate, as set forth in 3.9.2 following.

ACCESS SERVICE

3. Carrier Common Line Access Service (Cont'd)

3.9 Rates and Charges

3.9.1 Carrier Common Line Access Service

	Rate
Premium Access	
- Terminating Per Access Minute	$0.000
- Originating Per Access Minute	0.000

3.9.2 Presubscribed Interexchange Carrier Charge (PICC)

Residence	USOC	Rate
- Primary Residence	PICC1	$0.00
- Non-Primary Residence	PICC2	$0.00
- Residential Centrex (Centrex Dorm)	PICC8	$0.00
Business		
- Single Line Business	PICC3	$0.00
- Multiline Business	PICC4	$0.00
- Business Centrex (per line)		
1 Line	PICCX1	$0.00
2 Lines	PICCX2	0.00
3 Lines	PICCX3	0.00
4 Lines	PICCX4	0.00
5 Lines	PICCX5	0.00
6 Lines	PICCX6	0.00
7 Lines	PICCX7	0.00
8 Lines	PICCX8	0.00
9 or More Lines	PICCX9	0.00

ACCESS SERVICE

4. End User Access Service

The Telephone Company will provide End User Access Service (End User Access) to end users who obtain local exchange service from the Telephone Company under its general and/or local exchange tariffs.

4.1 General Description

End User Access provides for the use of an End User Common Line (EUCL).

4.2 Limitations

Neither a telephone number nor detail billing is provided with End User Access. Directory listings and Intercept arrangements are not included with End User Access.

4.3 Undertaking of the Telephone Company

The Telephone Company will provide End User Access at rates and charges as set forth in 4.7 following, as follows:

- Use of an EUCL by an end user in connection with interstate Access Services provided under this tariff. Such use will be provided when the end user obtains local exchange service.

- The Telephone Company will be responsible for contacts and arrangements with customers for the billing of End User Access charges.

ACCESS SERVICE

4. End User Access Service (Cont'd)

4.4 Obligations of Radio Common Carriers

When the end user is a Radio Common Carrier (RCC) or provider of paging service, such end users shall designate whether the local exchange service they are provided by the Telephone Company is used as an access line for RCC or paging services, or used as an administrative line.

4.5 Payment Arrangements and Credit Allowances

4.5.1 Minimum Period

The minimum period for which EUCL End User Access is provided to an end user and for which charges are applicable is the same as that in the general and/or local exchange tariffs for the associated local exchange service.

4.5.2 Cancellation of Orders

End User Access is cancelled when the order for the associated local telephone exchange service is cancelled. No cancellation charges apply.

4.5.3 Changes to Orders

When changes are made to orders for the local exchange service associated with End User Access, any necessary changes will be made for End User Access. No charges will apply.

4.5.4 Allowance for Interruptions

When there is an interruption to an EUCL, requested End User Access credit allowances for interruptions will be provided as set forth for credit allowance for interruptions in 2.4.4 preceding.

4.5.5 Temporary Suspension of Service

When an end user temporarily suspends its local exchange service which is associated with EUCL, one-half of the EUCL per month charge will be temporarily suspended for the time period the local exchange service is suspended.

4. End User Access Service (Cont'd)

4.6 Rate Regulations

4.6.1 Who Is Billed

EUCL per month charges will be billed to the end user.

4.6.2 Semi-Public Service

For the purposes of the EUCL charge, a semi-public service shall be deemed to be the same as a business line if the subscriber pays a rate that is not described as a residential rate in the local exchange tariff.

4.6.3 Business Services

(A) Single Line Service

When an end user is provided a single local business exchange service in a state, semi-public service included, and when this local business exchange service is provided under the general and/or local exchange service tariffs, the EUCL Single Line Business - Individual line or trunk rate as set forth in 4.7 following, applies to each such business individual line or trunk.

ACCESS SERVICE

4. End User Access Service (Cont'd)

4.6 Rate Regulations (Cont'd)

4.6.3 Business Services (Cont'd)

(B) Multiline Service

When an end user is provided more than one local business exchange service in a state by the same Telephone Company, semi-public service included, and when a local exchange service is provided under the general and/or local exchange service tariffs that is not covered by (C) following (Centrex), the EUCL-Multiline Business-Individual line or trunk rate as set forth in 4.7 following, applies to each such Multiline Business individual line or trunk.

The EUCL for ISDN Primary Rate Service (PRS) shall be five times the EUCL-Multiline Business-Individual line or trunk rate as set forth in 4.7 following.

The EUCL for ISDN Basic Rate Service (BRS) shall be the EUCL-Multiline Business-Individual line or trunk rate as set forth in 4.7 following.

4. End User Access Service (Cont'd)

4.6 Rate Regulations (Cont'd)

4.6.3 Business Services (Cont'd)

(C) Centrex CO and Centrex CO-like Services

For business Centrex CO and business Centrex CO-like service lines or trunks, the EUCL-Centrex CO rate as set forth in 4.7 following applies to each business line or trunk.

Centrex CO is a service that (1) uses a portion of a Telephone Company switch located at the Telephone Company central office to meet the customer's internal needs and serves as the customer's interface with the local and interexchange networks and (2) links the customer's main stations to the Telephone Company switch with subscriber loops.

Centrex CO-like services are services that operate in a manner that is substantially the same as Centrex CO and (1) are provided using switches located at Telephone Company central offices and (2) link customer main stations to the Telephone Company switch with subscriber loops.

Centrex CO or CO-like service provided to a college, university or school may serve both the college, university or school offices and the student or faculty dormitory (residential) quarters. When provided to residential quarters, the residential portion of the service is commonly known as dormitory service. Primary Line Residential charges will apply to lines to the student or faculty dormitory (residential) quarters as set forth in 4.7 following. Business charges for lines to the university , college or school offices will apply as set forth in 4.7 following. Charges shall be based on the number of residence and business lines reported to the Telephone Company by the end user.

ACCESS SERVICE

4. End User Access Service (Cont'd)

4.6 Rate Regulations (Cont'd)

4.6.4 Radio Common Carriers

For each local exchange service used only as a path for the transmission of Radio Common Carrier (RCC) traffic between the Telephone Company serving wire center and the RCC's radio equipment, End User Access charges do not apply. End User Access Charges will apply to the Radio Common Carrier's local exchange service used for administrative purposes.

A Radio Common Carrier is described as a common carrier engaged in the provision of Public Mobile Service, as defined in Part 22 of the FCC Rules and Regulations which is not also in the business of providing landline local exchange telephone service.

4.6.5 Remote Call Forwarding

For each local exchange service provided as Remote Call Forwarding (RCF) residential or business service, under the general and/or local exchange service tariffs, End User Access charges do not apply.

4. End User Access Service (Cont'd)

4.6 Rate Regulations (Cont'd)

4.6.6 Residence Services

(A) Primary Line and Non-Primary Line Service

When an end user is provided local residence exchange service(s) in a state, semi-public service included, and when the local residence exchange service is provided under the general and/or local exchange service tariffs, the EUCL Residence - Primary or Non-Primary line or trunk rate as set forth in 4.7 following, applies to each such local residence exchange service. See 2.6 for definition of Primary and Non-Primary line.

The EUCL for ISDN Basic Rate Service (BRS) shall be the EUCL Residence Non-Primary line or trunk rate as set forth in 4.7 following.

(B) Centrex CO and CO-like Dormitory Service

Regulations concerning the application of EUCL charges to student or faculty dormitory (residential) quarters served by Centrex CO or CO-like service are set forth in 4.6.3(C) preceding.

4.7 Rates and Charges

	Rate Per Month
EUCL - Residence including Centrex CO and CO-like Dormitory Service	
- Primary line or trunk, each	$4.35
- Non-Primary line or trunk, each	$4.35
EUCL - Single Line Business	
- Individual line or trunk, each	$4.35
EUCL - Multiline Business including Centrex CO and CO-like	
- Individual line or trunk, each	$6.00

ACCESS SERVICE

5. Ordering Options for Switched and Special Access Service

5.1 General

This section sets forth the regulations and order related charges for Access Orders for Switched and Special Access Services. These charges are in addition to other applicable charges as set forth in other sections of this tariff.

An Access Order is an order to provide the customer with Switched Access Service or Special Access Service or to provide changes to existing services.

Regulations and ordering procedures for Expanded Interconnection are contained in Section 8 following.

5.1.1 Ordering Conditions

A customer may order any number of services of the same type and between the same premises on a single Access Order. All details for services for a particular order must be identical except for those for multipoint service.

The customer shall provide all information necessary for the Telephone Company to provide and bill for the requested service. In addition to the order information required in 5.2 following, the customer must also provide:

- Customer name and premises address(es).
- Billing name and address (when different from customer name and address).
- Customer contact name(s) and telephone number(s) for the following provisioning activities: order negotiation, order confirmation, interactive design, installation and billing.

Orders for Feature Group D Switched Access Service are set forth in 5.2 following.

ACCESS SERVICE

5. Ordering Options for Switched and Special Access Service (Cont'd)

5.1 General

5.1.1 Ordering Conditions (Cont'd)

When ordering Switched Access Service, the customer must specify whether the service is to be provided as (1) Direct-Trunked Transport to the end office, (2) Direct-Trunked Transport to a tandem which connects with Tandem-Switched Transport from the tandem to the end office or (3) Tandem-Switched Transport to the end office. When all or a portion of service is ordered as Direct-Trunked Transport, the customer must specify the type and quantity of Direct-Trunked Transport facility (e.g., Voice Grade or High Capacity DS1 or DS3) in addition to a percent of interstate use (PIU).

The Customer must also specify the type of Entrance Facility to be used for Switched Access (e.g., Voice Grade or High Capacity). For High Capacity Entrance Facilities, the customer must specify the facility assignment and the channel assignment for each trunk in addition to a percent of interstate use (PIU).

Direct-Trunked Transport is available at all tandems and at all end offices except those end offices identified in NATIONAL EXCHANGE CARRIER ASSOCIATION, INC. TARIFF F.C.C. NO. 4. as not having the capability to provide Direct-Trunked Transport. Direct-Trunked Transport is not available: (1) from end offices that provide equal access through a centralized equal access arrangement, (2) from end offices that lack recording or measurement capability, and (3) for originating 8XX calls from non-Service Switching Point (SSP) equipped end offices that can not accommodate direct trunking of originating 8XX calls.

When the customer has both Tandem-Switched Transport and Direct-Trunked Transport at the same end office, Alternate Traffic Routing as set forth in 6.3.1(N) following can be provided at the customer's option. As set forth in 6.7.6(C) following, for end offices that lack capability to measure overflow, the customer must provide a temporary percent direct-routed (PDR) to be used in the apportionment of total access minutes for calculating the tandem-switched access minutes until July 1, 1994.

A customer's Local Transport may be connected to the Entrance Facility of another customer, providing the other customer submits a Letter of Authorization for this connection and assumes full responsibility for the cost of the Entrance Facility.

ACCESS SERVICE

5. Ordering Options for Switched and Special Access Service

5.1 General (Cont'd)

5.1.2 Provision of Other Services

(A) Testing Service, Additional Labor, Telecommunication Service Priority (TSP) and Special Facilities Routing shall be ordered with an Access Order or as set forth in (B) following. The rates and charges for these services, as set forth in other sections of this tariff, will apply in addition to the ordering charges set forth in this section and the rates and charges for the Access Service with which they are associated.

(B) With the agreement of the Telephone Company, the items listed in (A) preceding may subsequently be added to the order at any time, up to and including the service date for the Access Service. When added subsequently, charges for a design change as set forth in 5.2.2(C) following will apply when an engineering review is required.

(C) Additional Engineering is not an ordering option, but will be applied to an Access Order when the Telephone Company determines that Additional Engineering is necessary to accommodate a customer request. Additional Engineering will only be required as set forth in 9.1 following. When it is required, the customer will be so notified and will be furnished with a written statement setting forth the justification for the Additional Engineering as well as an estimate of the charges. If the customer agrees to the Additional Engineering, a firm order will be established. If the customer does not want the service or facilities after being notified that Additional Engineering of Telephone Company facilities is required, the order will be withdrawn and no charges will apply. Once a firm order has been established, the total charge to the customer for the Additional Engineering may not exceed the estimated amount by more than 10%.

The regulations, rates and charges for Additional Engineering are as set forth in 9. following and are in addition to the regulations, rates and charges specified in this section.

ACCESS SERVICE

5. Ordering Options for Switched and Special Access Service (Cont'd)

5.1 General (Cont'd)

5.1.3 Special Construction

The regulations, rates and charges for special construction are in addition to the regulations, rates and charges specified in this section.

5.2 Access Order

An Access Order is used by the Telephone Company to provide a customer Access Service as follows:

- Switched Access Services as set forth in 6. following,
- Special Access Services as set forth in 7. following, and
- Other Services as set forth in 5.1.2 preceding.

When placing an order for Access Service, the customer shall provide, at a minimum, the following information in addition to that set forth in 5.1.1 preceding:

- For Feature Group D Switched Access Service, the customer shall specify the number of busy hour minutes of capacity (BHMC) from the customer designated premises to the end office or Operator Transfer Service location by Feature Group and by type of BHMC. The number of BHMC or trunks (for customers other than providers of MTS or WATS) required for or to be converted to an SS7 Signaling capability. This information is used to determine the number of transmission paths as set forth in 6.5.5 following. The customer then specifies the Local Transport, Local Switching, and Operator Transfer Service Option.

ACCESS SERVICE

5. Ordering Options for Switched and Special Access Service (Cont'd)

5.2 Access Order (Cont'd)

- When Feature Group D is ordered with the SS7 optional feature, the customer shall specify a reference to existing signaling connections or reference a related SS7 signaling connection order. When ordering SS7 signaling, the customer shall provide the Signaling Transfer Point codes, location identifier codes and circuit identifier codes. In addition, the customer shall work cooperatively with the Telephone Company to determine the number of SS7 signaling connections required to handle its signaling traffic.

- Customers may, at their option, order FGD by specifying the number of trunks desired between customer designated premises and an entry switch or Operator Transfer Service location. When ordering by trunk quantities rather than BHMC quantities to an access tandem, the customer must also provide the Telephone Company an estimate of the amount of traffic it will generate to and/or from each end office subtending the access tandem to assist the Telephone Company in its own efforts to project further facility requirements.

5. Ordering Options for Switched and Special Access Service (Cont'd)

5.2 Access Order (Cont'd)

For the Operator Transfer Service Option ordered in conjunction with Feature Group D Switched Access Service as set forth in 6.2.3 and 6.2.4 following, the customer must specify the number of trunks or BHMCs desired between its premises and the Telephone Company operator services location.

Operator Transfer Service is provided at operator services locations as set forth in National Exchange Carrier Association, Inc. Tariff F.C.C. No. 4.

Special Access Service may be ordered for connection with Feature Group D Switched Access Service at Telephone Company designated WATS Serving Offices (WSOs) for the provision of WATS or WATS-type services and may be ordered separately by a customer other than the customer which orders the Feature Group D Switched Access Service. For the Special Access Service the customer shall specify the customer designated premises at which the Special Access Service terminates, the type of line (i.e., two-wire or four-wire), the type of calling (i.e., originating, terminating, or two way) and the type of Supervisory Signaling. When the optional screening, switching and/or recording functions are not provided at the customer serving wire center, Channel Mileage, as set forth in 7.2.1 following, must be ordered between that wire center and the WSO where the screening, switching and/or recording functions can be provided.

- For all Special Access Services, the customer must specify the customer designated premises or hubs involved, the type of service (e.g., Voice Grade, High Capacity, etc.), the channel interface, technical specification package and options desired. For multipoint services, the channel interface at each customer designated premises may, at the request of the customer, be different but all such interfaces shall be compatible.

ACCESS SERVICE

5. Ordering Options for Switched and Special Access Service (Cont'd)

5.2 Access Order (Cont'd)

The BHMC may be determined by the customer in the following manner. For each day (8 a.m. to 11 p.m., Monday through Friday, excluding national holidays), the customer shall determine the highest number of minutes of use for a single hour (e.g., 55 minutes in the 10-11 AM hour). The customer shall, for the same hour period (i.e., busy hour) for each of twenty consecutive business days, pick the twenty consecutive business days in a calendar year which add up to the largest number of minutes of use. Both originating and terminating minutes shall be included. The customer shall then determine the average busy hour minutes of capacity (i.e., BHMC) by dividing the largest number of minutes of use figure for the same hour period for the consecutive twenty business day period by 20. This computation shall be performed for each end office the customer wishes to serve. These determinations thus establish the forecasted BHMC for each end office.

Where the Special Access Service is exempt from the Special Access Surcharge, as set forth in 7.3 following and the customer shall furnish with the order the certification as set forth in 7.3.3 following.

5.2.1 Access Order Service Date

(A) The Telephone Company will provide the Access Service in accordance with the customer's requested service date, subject to the following conditions:

(1) The Telephone Company shall make available to all customers upon request a schedule of applicable service dates for Switched and Special Access Services. The schedule shall specify the applicable service date for services and the quantities of services that can be provided in the applicable service date.

The Telephone Company will not accept orders for service dates which exceed the applicable service date by more than six months.

5. Ordering Options for Switched and Special Access Service (Cont'd)

5.2 Access Order (Cont'd)

5.2.1 Access Order Service Date (Cont'd)

(A) (Cont'd)

(1) (Cont'd)

Access Services will be installed during Telephone Company business days. If a customer requests that installation be done outside of scheduled work hours, and the Telephone Company agrees to this request, the customer will be subject to applicable Additional Labor Charges as set forth in 9.4.2 (T) following.

5. Ordering Options for Switched and Special Access Service (Cont'd)

5.2 Access Order (Cont'd)

5.2.2 Access Order Modifications

The customer may request a modification of its Access Order prior to the service date. The Telephone Company will make every effort to accommodate a requested modification when it is able to do so with the normal work force assigned to complete such an order within normal business hours. If the modification cannot be made with the normal work force during normal business hours, the Telephone Company will notify the customer. If the customer still desires the Access Order modification, the Telephone Company will schedule a new service date. All charges for Access Order modifications will apply on a per occurrence basis.

Any increase in the number of Special Access Service channels or Switched Access Service lines, trunks or busy hour minutes of capacity or CCS/SS7 Port Terminations will be treated as a new Access Order (for the increased amount only).

If order modifications are necessary to satisfy the transmission performance for a Special Access Service ordered by a customer, these changes will be made without order modification charges being incurred by the customer.

(A) Service Date Change Charge

The customer may request a change of service date on a pending Access Order prior to the service date. A change of service date is a change of the scheduled service date by the customer to either an earlier date or a later date which does not exceed 30 calendar days from the original service date.

If the Telephone Company determines that the customer's request can be accommodated without delaying the service dates for orders of other customers, the service date will be changed and the Service Date Change Charge applied to the order.

ACCESS SERVICE

5. Ordering Options for Switched and Special Access Service (Cont'd)

5.2 Access Order (Cont'd)

5.2.2 Access Order Modifications (Cont'd)

(A) Service Date Change Charge (Cont'd)

If the service date is changed to an earlier date, and the Telephone Company determines additional labor or extraordinary costs are necessary to meet the earlier service date requested by the customer, the customer will be notified by the Telephone Company that Expedited Order Charges as set forth in (D) following apply. Such charges will apply in addition to the Service Date Change Charge.

If the requested service date exceeds 30 calendar days following the original service date, and the Telephone Company determines that the customer's request can be accommodated, the Telephone Company will cancel the original order and apply the Cancellation Charges as set forth in 5.2.3 following. A new Access Order with the new service date will be issued. The Service Date Change Charge will not apply.

If the service date is changed due to a Design Change as set forth in (C) following, the Service Date Change Charge will apply.

A Service Date Change Charge will apply, on a per order per occurrence basis, for each service date changed. The applicable charge is:

	USOC	Charge
Service Date Change Charge, per order	OMC	$23.19

(B) Partial Cancellation Charge

Any decrease in the number of ordered Special Access Service channels or Switched Access Service lines, trunks or busy hour minutes of capacity or CCS/SS7 Port Terminations will be treated as a partial cancellation and the charges as set forth in 5.2.3 following will apply.

5. Ordering Options for Switched and Special Access Service (Cont'd)

5.2 Access Order (Cont'd)

5.2.2 Access Order Modifications (Cont'd)

(C) Design Change Charge

The customer may request a design change to the service ordered. A design change is any change to an Access Order which requires engineering review. An engineering review is a review by Telephone Company personnel, of the service ordered and the requested changes to determine what changes in the design, if any, are necessary to meet the changes requested by the customer. Design changes include such things as the addition or deletion of optional features or functions or a change in the type of Transport Termination (Switched Access only), type of channel interface, type of Interface Group or technical specification package. Design changes do not include a change of customer designated premises, end office switch, Feature Group type or Special Access Service channel type. Changes of this nature will require the issuance of a new order and the cancellation of the original order with appropriate cancellation charges applied.

The Telephone Company will review the requested change, notify the customer whether the change is a design change, if the change can be accommodated and if a new service date is required. If the customer authorizes the Telephone Company to proceed with the design change, a Design Change Charge will apply in addition to the charge for Additional Engineering as set forth in 9.4.1 following. If a change of service date is required, the Service Date Change Charge as set forth in (A) preceding will also apply.

The Design Change Charge will apply on a per order per occurrence basis, for each order requiring a design change. The applicable charge is:

	USOC	Charge
Design Change Charge, per order	H28	$20.87

5. Ordering Options for Switched and Special Access Service (Cont'd)

5.2 Access Order (Cont'd)

5.2.2 Access Order Modifications (Cont'd)

(D) Expedited Order Charge

If a customer desires that service be provided on an earlier date than that which has been established for the Access Order, the customer may request that service be provided on an expedited basis. If the Telephone Company agrees to provide the service on an expedited basis, an Expedited Order Charge will apply.

Expedited Order Charge is based on the extent to which the Access Order has been processed at the time the Telephone Company agrees to the service date improvement and is calculated as follows:

- Based on the critical dates associated with the Access Order, as defined in 5.2.3(B) following, the Telephone Company will determine which critical date will be next completed on the order.

- Using the table in 5.2.3(D) following and the critical date as determined above, the Telephone Company will determine the percentage of the provisioning interval not yet completed.

- The Telephone Company will apply this percentage to the sum of all the nonrecurring charges associated with the order and divide this sum by the number of days remaining in the original service interval.

- The per day charges so developed will then be applied on a per day of improvement basis, per order, but in no event shall the charge exceed 50% of the total nonrecurring charges associated with the Access Order.

5. Ordering Options for Switched and Special Access Service (Cont'd)

5.2 Access Order (Cont'd)

5.2.3 Cancellation of an Access Order

(A) A customer may cancel an Access Order for the installation of service on any date prior to the service date. The cancellation date is the date the Telephone Company receives written or verbal notice from the customer that the order is to be cancelled. The verbal notice must be followed by written confirmation within 10 days. If a customer or a customer's end user is unable to accept Access Service within 30 calendar days after the original service date, the customer has the choice of the following options:

- The Access Order shall be cancelled and charges set forth in (B) following will apply, or

- Billing for the service will commence.

In such instances, the cancellation date or the billing date, depending on which option is selected by the customer, shall be the 31st day beyond the original service date of the Access Order.

(B) When the customer cancels the Access Order, the applicable cancellation charges are based upon the amount of provisioning completed by the Telephone Company at the time the order is cancelled. These charges include the nonrecoverable cost of equipment and material ordered, provided or used, plus the nonrecoverable cost of installation and removal including the costs of engineering, labor, supervision, transportation, rights-of-way and other associated costs. The charges are determined from certain Telephone company critical dates associated with access order provisioning intervals. At any point in the provisioning interval, the Telephone Company is able to determine which critical date was last completed and can thus determine what percentage of the Telephone Company's provisioning costs have been incurred as of the critical date.

ACCESS SERVICE

5. Ordering Options for Switched and Special Access Service (Cont'd)

5.2 Access Order (Cont'd)

5.2.3 Cancellation of an Access Order (Cont'd)

(B) (Cont'd)

Critical dates determined by the Telephone Company are as follows:

OD Order Date
Date order received from customer

FOC Firm Order Confirmation
Date the due date and other information are sent to the customer

MD Memo Date
Date memo is sent to other departments

DLRD Design Layout Record Date
Date circuit design is sent to the customer

WOD Work Order Date
Date work order is sent to other departments

PTD Plant Test Date
Date all equipment between customer premises and office is installed and tested

CD Completion Date or
DD Due Date
Date the order is deemed completed and turned over to the customer

(C) Installation of Switched or Special Access Service facilities is considered to have started when the Telephone Company incurs any cost in connection therewith or in preparation thereof which would not otherwise have been incurred. When Firm Order Confirmation is issued to the customer, installation has commenced and cancellation charges are assessed as follows:

A charge equal to the non-recurring charges associated with the Access order is multiplied by the appropriate percentage found in 5.2.3(D) following. The last completed critical date will determine which percentage to apply to calculate the Cancellation Charge.

ACCESS SERVICE

5. Ordering Options for Switched and Special Access Service (Cont'd)

5.2 Access Order (Cont'd)

5.2.3 Cancellation of an Access Order (Cont'd)

(D) The following chart is used to determine the Cancellation Charge.

Type of Service	(A) Critical Date	(B) Number Of Days After Order Date	(C) Number Of Days Before Due Date	(D) Percent Of Total Charge
Switched Access	OD	0		0%
	FOC	3		4%
	MD	4		6%
	DLRD	10		21%
	WOD	16		21%
	PTD		3	88%
	CD/DD		0	100%
Special Access	OD	0		0%
	FOC	3		5%
	MD	4		7%
	DLRD	11		16%
	WOD	17		34%
	PTD		3	92%
	CD/DD		0	100%

ACCESS SERVICE

5. Ordering Options for Switched and Special Access Service (Cont'd)

5.2 Access Order (Cont'd)

5.2.3 Cancellation of an Access Order (Cont'd)

(E) No Cancellation Charge will apply when the customer cancels an Access Order prior to the start of installation of access facilities or when a customer cancels an order for the discontinuance of service.

If the Telephone Company misses a service date by more than 30 days due to circumstances over which it has direct control (excluding, e.g., acts of God, govern mental requirements, work stoppages and civil commotions), the customer may cancel the Access Order without incurring cancellation charges.

ACCESS SERVICE

5. Ordering Options for Switched and Special Access Service (Cont'd)

5.2 Access Order (Cont'd)

5.2.4 Selection of Facilities For Access Orders

(A) When there are High Capacity facilities to a hub on order or in service for the customer's use, the customer may request a specific channel or transmission path be used to provide the Switched or Special Access Service requested in an Access Order. The Telephone Company will make a reasonable effort to accommodate the customer request.

(B) For all other Access Orders, the option to request a specific transmission path or channel is not provided except as provided for under Special Facilities Routing as set forth in 11. following.

5.2.5 Minimum Period

(A) Except as set forth in (B), 6., 7., 8. and 9.4.2 following, the minimum period for which Access Service is provided and for which charges are applicable, is one month.

ACCESS SERVICE

5. Ordering Options for Switched and Special Access Service (Cont'd)

5.2 Access Order (Cont'd)

5.2.6 Minimum Period Charges

When Access Service is disconnected prior to the expiration of the minimum period, charges are applicable for the balance of the minimum period. A disconnect constitutes facilities being returned to available inventory.

The Minimum Period Charge for monthly billed services will be determined as follows:

(A) For Switched Access Service, the charge for a month or fraction thereof is equal to the applicable minimum monthly rates for the capacity as set forth in 6.7.3 following.

(B) For Special Access Service and flat-rated Switched Access Service, the charge for a month or fraction thereof is the applicable monthly rates for the appropriate channel type as set forth in 7. following.

5.2.7 Shared Use Facilities

Shared Use (i.e., Switched and Special Access Services provided over the same High Capacity facilities) is allowed only for High Capacity facilities. Shared use facilities to a hub will be ordered and provided as Special Access Service. While shared use is allowed, individual services utilizing these facilities must be ordered either as Switched Access Service or Special Access Service. When placing the order for the individual service(s), the customer must specify a channel assignment for each service ordered.

ACCESS SERVICE

5. Ordering Options for Switched and Special Access Service (Cont'd)

5.2 Access Order (Cont'd)

5.2.8 Access Orders For Services Provided By More Than One Exchange Telephone Company

(A) Access Services provided by more than one Telephone Company are services where one end of the Local Transport, Directory Transport or Channel Mileage element is in the operating territory of one Telephone Company and the other end of the element is in the operating territory of a different Telephone Company or where the 500 or 900 NXX Access Service and the end office are not provided by the same Telephone Company.

The ordering procedure for this service is dependent upon the billing arrangement, as set forth in 2.4.7 preceding, to be used by the Telephone Companies involved in providing the Access Service. The Telephone Company will notify the customer which of the ordering procedures will apply.

(1) Single Company Billing

The Telephone Company receiving the order from the customer will arrange to provide the service and bill the customer as set forth in 2.4.7(A)(1). The customer will place the order with the Telephone Company as follows:

(a) For Switched Access Services the customer will place the order with the Telephone Company in whose territory the first point of switching is located. The first point of switching is:

ACCESS SERVICE

5. Ordering Options for Switched and Special Access Service (Cont'd)

5.2 Access Order (Cont'd)

5.2.8 Access Orders For Services Provided By More Than One Exchange Telephone Company (Cont'd)

(A) (Cont'd)

(2) (Cont'd)

(b) For Feature Group D Switched Access Services, the customer must place an order with the Telephone Company in whose territory the end office is located. Customers may, at their option, order FGD to the access tandem.

(c) Customers ordering Special Access Service to be interconnected with Switched Access Services at Telephone Company designated WATS Serving Offices for the provision of WATS or WATS-type Services must place an order with each Telephone Company in whose territory the end office and the WATS Serving Office are located, if they are not collocated.

ACCESS SERVICE

5. Ordering Options for Switched and Special Access Service (Cont'd)

5.2 Access Order (Cont'd)

5.2.8 Access Orders For Services Provided By More Than One Exchange Telephone Company (Cont'd)

(A) (Cont'd)

(2) (Cont'd)

(d) Except for Special Access Service as set forth in (c) above or as set forth in (e) below, the customer may place the order for a Special Access Service with either Exchange Telephone Company.

(e) For Special Access Service involving a hub(s) the customer must place the order with the Telephone Company in whose territory the hub(s) is located.

For the service(s) ordered as set forth preceding, the customer must also supply a copy of the order to the Telephone Company in whose operating territory a customer designated premises is located and any other Telephone Company(s) involved in providing the service.

ACCESS SERVICE

6. Switched Access Service

6.1 General

Switched Access Service, which is available to customers for their use in furnishing their services to end users, provides a two-point electrical communications path between a customer's premises and an end user's premises. It provides for the use of common terminating, switching and trunking facilities, and for the use of common subscriber plant of the Telephone Company. Switched Access Service provides for the ability to originate calls from an end user's premises to a customer's premises, and to terminate calls from a customer designated premises to an end user's premises in the LATA where it is provided. Specific references to material describing the elements of Switched Access Service are provided in 6.1.1 and 6.1.2 following.

Rates and charges for Switched Access Service depend generally on the specific Feature Group ordered by the customer, e.g., for MTS or WATS services or MTS-WATS equivalent services, and whether it is provided in a Telephone Company end office that is equipped to provide equal or non-equal access. Rates and charges for Switched Access Service are set forth in 6.8 following. The application of rates for Switched Access Service is described in 6.7 following. Rates and charges for services other than Switched Access Service, e.g., a customer's interLATA toll message service, may also be applicable when Switched Access Service is used in conjunction with these other services. Descriptions of such applicability are provided in 6.2.1 and 6.7.5 following.

ACCESS SERVICE

6. Switched Access Service (Cont'd)

6.1 General (Cont'd)

6.1.1 Feature Group Arrangements and Manner of Provision

Switched Access Service is provided in four service categories of standard and optional features called Feature Groups. These are differentiated by their technical characteristics, e.g., line side vs. trunk side connection at the Telephone Company entry switch, and the manner in which an end user accesses them in originating calling, e.g., with or without an access code. Following is a brief description of each Feature Group arrangement.

(A) Feature Group D (FGD)

FGD Access, which is available to all customers, provides trunk side access to Telephone Company end office switches with an associated uniform 101XXXX access code for the customer's use in originating and terminating communications. Special Access Services utilized for connection with FGD at Telephone Company designated WATS Serving offices as set forth in 7. following may be ordered separately by a customer other than the customer which orders the FGD Switched Access Service for the provision of WATS or WATS-type services. Special Access Services are ordered as set forth in 5.2 preceding. A more detailed description of FGD Access is provided in 6.2 following.

Operator Transfer Services will be provided over FGD switched access service trunks from the operator service location to the customer's premises. Where required by technical limitations, a separate FGD trunk group will be established for Operator Transfer Service. The operator service location will provide trunk answer and disconnect supervisory signaling to the customer.

ACCESS SERVICE

6. Switched Access Service (Cont'd)

6.1 General (Cont'd)

6.1.1 Feature Group Arrangements and Manner of Provision (Cont'd)

(B) Manner of Provision

Switched Access is furnished in either quantities of lines or trunks, or in busy hour minutes of capacity (BHMCs). FGD Access is furnished on a BHMC basis and on a per trunk basis as set forth in 5.2 preceding.

BHMCs are differentiated by type and directionality of traffic carried over a Switched Access Service arrangement. Differentiation of traffic among BHMC types is necessary for the Telephone Company to properly design Switched Access Service to meet the traffic carrying capacity requirement of the customer.

There are three major BHMC categories identified as: Originating, Terminating and Directory Assistance. Originating BHMCs represent access capacity within a LATA for carrying traffic from the end user to the customer; Terminating BHMCs represent access capacity within a LATA for carrying traffic from the customer to the end user; and, Directory Assistance BHMCs represent access capacity within a LATA for carrying Directory Assistance traffic from the customer to a Directory Assistance location. When ordering capacity for FGD Access, the customer must at a minimum specify such access capacity in terms of Originating BHMCs and/or Terminating BHMCs. Directory Assistance BHMCs are used for ordering Directory Assistance Access Service.

ACCESS SERVICE

6. Switched Access Service (Cont'd)

6.1 General (Cont'd)

6.1.1 Feature Group Arrangements and Manner of Provision (Cont'd)

(B) Manner of Provision (Cont'd)

Because some customers will wish to further segregate their originating traffic into separate trunk groups, or because segregation may be required by network considerations Originating BHMCs are further categorized into Domestic, 8XX, Operator, IDDD and Operator Transfer Services. Domestic BHMCs represent access capacity for carrying only domestic traffic other than 8XX, Operator and Operator Transfer Services traffic; IDDD BHMCs represent access capacity for carrying only international traffic; and, 8XX, Operator and Operator Transfer Services BHMCs represent access capacity for carrying, respectively, only 8XX, Operator or Operator Transfer Services traffic. When ordering such types of access capacity, the customer must specify Domestic, 8XX, Operator, IDDD or Operator Transfer Services BHMCs.

6.1.2 Rate Categories

There are four rate categories which apply to Switched Access Service:

- Local Transport (described in 6.1.2(A) following)
- End Office (described in 6.1.2(B) following)
- Carrier Common Line (described in Section 3 preceding)
- End User (described in Section 4 preceding)

ACCESS SERVICE

6. Switched Access Service (Cont'd)

6.1 General (Cont'd)

6.1.2 Rate Categories (Cont'd)

The following diagram depicts a generic view of the components of Switched Access Service and the manner in which the components are combined to provide a complete Access Service.

SWITCHED ACCESS SERVICE

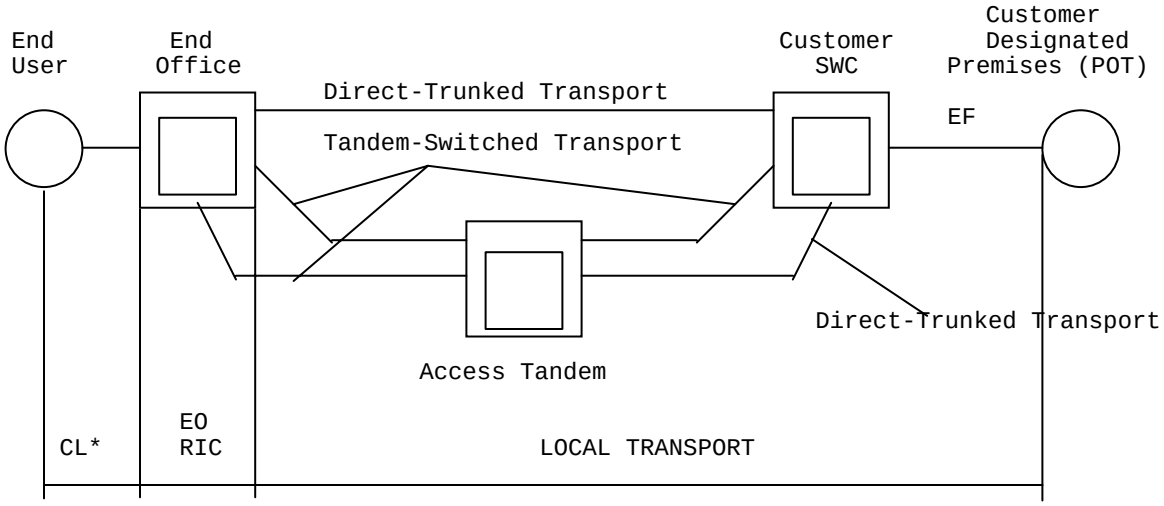

CL=Common Line
EO=End Office
EF=Entrance Facility
POT=Point of Termination
RIC=Residual Interconnection Charge
SWC=Serving Wire Center

Direct-Trunked Transport
- Direct-Trunked Facility
  - Direct-Trunked Termination
- Access Tandem Direct Trunk Port

Tandem-Switched Transport
- Tandem-Switched Facility
  - Tandem-Switched Termination
  - Tandem Switching Charge
  - Tandem-Switched Multiplexer

*Carrier Common Line access is provided under Section 3. of this Tariff.

ACCESS SERVICE

6. Switched Access Service (Cont'd)

6.1 General (Cont'd)

6.1.2 Rate Categories (Cont'd)

(A) Local Transport

The Local Transport rate category provides the transmission facilities between the customer designated premises and the end office switch(es), which may be a Remote Switching Module(s), where the customer's traffic is switched to originate or terminate the customer's communications. Mileage measurement rules are set forth in 6.7.6 following and in this section.

Local Transport is a two-way voice frequency transmission path composed of facilities determined by the Telephone Company. The two-way voice frequency transmission path permits the transport of calls in the originating direction (from the end user end office switch to the customer designated premises) and in the terminating direction (from the customer designated premises to the end office switch), but not simultaneously. The voice frequency transmission path may be comprised of any form or configuration of plant capable of and typically used in the telecommunications industry for the transmission of voice and associated telephone signals within the frequency bandwidth of approximately 300 to 3000 Hz. The customer must specify the choice of facilities (i.e., Voice Grade 2-Wire, Voice Grade 4-Wire, or High Capacity DS1 or DS3) to be used in the provision of the Direct-Trunked Transport or Entrance Facility.

The customer must specify when ordering: (1) whether the service is to be directly routed to an end office switch or through an access tandem switch, (2) the type of Direct-Trunked Transport and whether it will overflow to Tandem-Switched Transport when service is directly routed to an end office, (3) the type of Entrance Facility, (4) the directionality of the service, and (5) when multiplexing is required, the hub(s) at which the multiplexing will be provided.

ACCESS SERVICE

6. Switched Access Service (Cont'd)

6.1 General (Cont'd)

6.1.2 Rate Categories (Cont'd)

(A) Local Transport (Cont'd)

Local Transport is provided at the rates and charges set forth in 6.8.1 following. The application of these rates with respect to individual Feature Groups is as set forth in 6.7.1(D) following.

The Local Transport Rate Category includes five classes of rate elements: (1) Entrance Facility, (2) Direct-Trunked Transport, (3) Tandem-Switched Transport, (4) Residual Interconnection Charge, and (5) Multiplexing.

(1) Entrance Facility

The Entrance Facility recovers a portion of the costs associated with a communications path between a customer designated premises and the serving wire center of that premises. Included as part of the Entrance Facility is a standard channel interface arrangement which defines the technical characteristics associated with the type of facilities to which the access service is to be connected at the customer designated premises and the type of signaling capability, if any.

Two types of Entrance Facility are available: (1) High Capacity DS1 (an isochronous serial digital channel with a rate of 1.544 Mbps), and (2) High Capacity DS3 (an isochronous serial digital channel with a rate of 44.736 Mbps). The minimum period for which a DS3 Entrance Facility is provided is twelve months.

6. Switched Access Service (Cont'd)

6.1 General (Cont'd)

6.1.2 Rate Categories (Cont'd)

(A) Local Transport (Cont'd)

(1) Entrance Facility (Cont'd)

One charge applies for each Entrance Facility that is terminated at a customer designated premises. This charge specified in 6.8.1 following will apply even if the customer designated premises and the serving wire center are collocated in a Telephone Company building.

A customer's Local Transport may be connected to the Entrance Facility of another customer, providing the other customer submits a Letter of Authorization for this connection and assumes full responsibility for the cost of the Entrance Facility.

(2) Direct-Trunked Transport

The Direct-Trunked Transport rate elements recover a portion of the cost associated with a communications path between the serving wire center and an end office or serving wire center and a tandem on circuits dedicated to the use of a single customer.

Direct-Trunked Transport is available to all tandems and to all end offices except those end offices identified in NATIONAL EXCHANGE CARRIER ASSOCIATION, INC. TARIFF F.C.C. NO. 4, WIRE CENTER INFORMATION as not having the capability to provide Direct-Trunked Transport.

ACCESS SERVICE

6. Switched Access Service (Cont'd)

6.1 General (Cont'd)

6.1.2 Rate Categories (Cont'd)

(A) Local Transport (Cont'd)

(2) Direct-Trunked Transport (Cont'd)

Direct-Trunked Transport is not available: (1) from end offices that provide equal access through a centralized equal access arrangement, (2) from end offices that lack recording or measurement capability, and (3) for originating 8XX calls from non-Service Switching Point (SSP) equipped end offices that can not accommodate direct trunking of originating 8XX calls.

Two types of Direct-Trunked Transport are available: (1) High Capacity DS1 (an isochronous serial digital channel with a rate of 1.544 Mbps), and (2) High Capacity DS3 (an isochronous serial digital channel with a rate of 44.736 Mbps). The minimum period for which a High Capacity DS3 Direct-Trunked Transport is provided is twelve months.

High Capacity DS1 Direct-Trunked Transport can not be terminated at end offices that are not identified as hub offices that provide DS1 to Voice Grade multiplexing or are not electronic end offices. Additionally, DS3 Direct-Trunked Transport can not be terminated at end offices that are not identified as hub offices that provide DS3 to DS1 multiplexing. Offices that provide multiplexing are identified in NATIONAL EXCHANGE CARRIER ASSOCIATION, INC. TARIFF F.C.C. NO. 4, WIRE CENTER INFORMATION.

6. Switched Access Service (Cont'd)

6.1 General (Cont'd)

6.1.2 Rate Categories (Cont'd)

(A) Local Transport (Cont'd)

(2) Direct-Trunked Transport (Cont'd)

Direct-Trunked Transport rates consist of a Direct-Trunked Facility rate specified in 6.8.1 following which is applied on a per mile basis and a Direct-Trunked Termination rate which is applied at each end of each measured segment of the Direct-Trunked Facility (e.g., at the end office, hub, tandem, and serving wire center). When the Direct-Trunked Facility mileage is zero, neither the Direct-Trunked Facility rate nor the Direct-Trunked Termination rate will apply.

The Direct-Trunked Facility rate recovers a portion of the costs of the transmission facilities, including intermediate transmission circuit equipment, between the end points of the interoffice circuits.

The Direct-Trunked Termination rate specified in 6.8.1 following recovers a portion of the costs of the circuit equipment that is necessary for the termination of each end of the Direct-Trunked Facility.

(3) Access Tandem Direct Trunk Port

Charges for Access Tandem Direct Trunk Ports, located on the serving wire center side of the Access Tandem, recover costs to terminate direct trunks. Access Tandem Direct Trunk Ports are a flat-rate monthly charge as specified in 6.8.1 following assessed to the customer purchasing the dedicated trunk terminated at that port.

6. Switched Access Service (Cont'd)

6.1 General (Cont'd)

6.1.2 Rate Categories (Cont'd)

(A) Local Transport (Cont'd)

(4) Tandem-Switched Transport

The Tandem-Switched Transport rate elements recover a portion of the costs associated with a communications path between a serving wire center and an end office or between a tandem and an end office on circuits that are switched at a tandem switch.

Tandem-Switched Transport rates consist of a Tandem Switching Charge rate, a Tandem-Switched Facility rate, and a Tandem-Switched Termination rate.

The Tandem Switching Charge rate recovers a portion of the costs of switching traffic through an access tandem. The Tandem Switching Charge rate specified in 6.8.1 following is applied on a per access minute per tandem basis for all originating and all terminating minutes of use switched at the tandem. Tandem locations are identified in NATIONAL EXCHANGE CARRIER ASSOCIATION, INC. TARIFF F.C.C. NO. 4, WIRE CENTER INFORMATION.

The Tandem-Switched Facility rate recovers a portion of the costs of the transmission facilities, including intermediate transmission circuit equipment, between the end points of the interoffice circuits.

ACCESS SERVICE

6. Switched Access Service (Cont'd)

6.1 General (Cont'd)

6.1.2 Rate Categories (Cont'd)

(A) Local Transport (Cont'd)

(4) Tandem-Switched Transport (Cont'd)

The Tandem-Switched Facility rate specified in 6.8.1 following is applied on a per access minute per mile basis for all originating and terminating minutes of use routed over the facility. Mileage for Tandem-Switched Facility is measured in segments, as set forth in 6.7.12 following.

The Tandem-Switched Termination rate recovers a portion of the costs of the circuit equipment necessary for the termination of each end of each measured segment of the Tandem-Switched Facility. The Tandem-Switched Termination rate specified in 6.8.1 following is applied on a per access minute per measured segment of Tandem-Switched Facility basis for all originating and terminating minutes of use routed over the facility. When the Tandem-Switched Facility mileage is zero, the Tandem-Switched Facility rate will not apply, however, the Tandem-Switched Termination rate will apply.

The Tandem-Switched Multiplexing charge recovers the cost of multiplexing equipment on the end office side of the tandem switch. The Tandem-Switched Multiplexing charge specified in 6.8.1 following is a per-minute charge assessed to the customer purchasing common transport on the end office-to-tandem link.

ACCESS SERVICE

6. Switched Access Service (Cont'd)

6.1 General (Cont'd)

6.1.2 Rate Categories (Cont'd)

(A) Local Transport (Cont'd)

(5) Residual Interconnection Charge

The Residual Interconnection Charge rate recovers the non-facilities costs and other residual costs associated with Local Transport that are not recovered by other local transport rate elements. The Residual Interconnection Charge specified in 6.8.1 following applies at the end office to all switched access minutes of use (i.e., both Tandem-Switched and Direct-Trunked) for all carriers.

The Supplemental LEC Transport Charge rate recovers facilities costs associated with Local Transport that are not recovered by other rate elements. The Supplemental LEC Transport Charge specified in 6.8.1 following applies at the end office to all switched access minutes of use (i.e., both Tandem-Switched and Direct-Trunked) for all carriers except competitive providers of local transport. This supplemental charge is applied in addition to the Residual Interconnection Charge.

(6) Multiplexing

DS3 to DS1 Multiplexing charges specified in 6.8.1 following apply when a High Capacity DS3 Entrance Facility or High Capacity DS3 Direct-Trunked Facility is connected with High Capacity DS1 Direct-Trunked Transport. The DS3 to DS1 multiplexer will convert a 44.736 Mbps channel to 28 DS1 channels using digital time division multiplexing.

Multiplexing is only available at wire centers identified in NATIONAL EXCHANGE CARRIER ASSOCIATION, INC. TARIFF F.C.C. NO. 4, WIRE CENTER INFORMATION.

6. Switched Access Service (Cont'd)

6.1 General (Cont'd)

6.1.2 Rate Categories (Cont'd)

(A) Local Transport (Cont'd)

(7) Interface Groups

Ten Interface Groups are provided for terminating the Local Transport Entrance Facility at the customer's designated premises. Each Interface Group provides a specified premises interface (e.g., two-wire, four-wire, DS1, etc.). Where transmission facilities permit, and at the option of the customer, the Entrance Facility may be provided with optional features as set forth in (7) following.

As a result of the customer's access order and the type of Telephone Company transport facilities serving the customer's designated premises, the need for signaling conversions or two-wire to four-wire conversions, or the need to terminate digital or high frequency facilities in channel bank equipment may require that Telephone Company equipment be placed at the customer's designated premises. For example, if a voice frequency interface is ordered by the customer and the Telephone Company facilities serving the customer's designated premises are digital, then Telephone Company channel bank equipment must be placed at the customer's designated premises in order to provide the voice frequency interface ordered by the customer.

ACCESS SERVICE

6. Switched Access Service (Cont'd)

6.1 General (Cont'd)

6.1.2 Rate Categories (Cont'd)

(A) Local Transport (Cont'd)

(7) Interface Groups (Cont'd)

Technical specifications concerning the available interface groups are set forth in 10.1 following.

(8) Nonchargeable Optional Features

Where transmission facilities permit, the Telephone Company will, at the option of the customer, provide the following nonchargeable optional features in association with Local Transport.

(a) Supervisory Signaling

Where the transmission parameters permit, and where signaling conversion is required by the customer to meet its signaling capability, the customer may order an optional supervisory signaling arrangement for each transmission path provided as set forth in 10.1.12 following.

ACCESS SERVICE

6. Switched Access Service (Cont'd)

6.1 General (Cont'd)

6.1.2 Rate Categories (Cont'd)

(A) Local Transport (Cont'd)

(8) Nonchargeable Optional Features (Cont'd)

(b) Customer Subscription to CCSNC

When a customer subscribes to Common Channel Signaling (SS7) Network Connection Service (CCSNC Service), the following optional features are made available and are described in 6.3.1 following.

- Signaling System 7 (SS7) Signaling
- Calling Party Number
- Carrier Selection Parameter
- Charge Number Parameter

(9) Chargeable Optional Features

(a) Common Channel Signaling, Signaling System 7 (CCS/SS7) Network Connection (CCSNC) Service

This service provides a signaling path between a customer's designated Signaling Point of Interface (SPOI) and a Telephone Company's Signaling Transfer Point (STP). CCSNC is provided as set forth in 6.3.3(C) following.

ACCESS SERVICE

6. Switched Access Service (Cont'd)

6.1 General (Cont'd)

6.1.2 Rate Categories (Cont'd)

(A) Local Transport (Cont'd)

(9) Chargeable Optional Features (Cont'd)

(b) CIC and OZZ Signaling Information (COSI)

This option is end office-generated signaling which provides the Carrier Identification Code (CIC) and the OZZ digits needed to perform tandem switching functions for switched transport services. This option is only available with the Feature Group D trunks when directly routed to an equal access end office switch. It is not available from the Telephone Company's access tandem. CIC and OZZ Signaling Information is provided as set forth in 6.3.3(D) following, via multifrequency (MF) address signaling or, where technically feasible, via out of band CCS/SS7 signaling.

(c) Clear Channel Capability (CCC)

CCC is a Feature Group D (FGD) Direct-Trunked Transport arrangement that allows a customer to transport 1.536 Mbps information rate signals over a 1.544 Mbps High Capacity DS1 channel or over a 1.544 Mbps High Capacity DS1 channel derived from a multiplexed 44.736 Mbps High Capacity DS3 channel with no constraint on the quantity or sequence of one and zero bits. This arrangement requires the customer interface to conform to Bipolar with Eight Zero Substitution (B8ZS) line code as described in Technical Reference TR-NRL-000054 and Technical Reference TR-INS-000342. The CCC optional feature is provided as set forth in 6.3.3(F) following.

(B) End Office

The End Office rate category provides the local end office switching and end user termination functions necessary to complete the transmission of Switched Access communications to and from the end users served by the local end office. The End Office rate category includes the Switching and Information (i.e., Directory Assistance) rate elements. The components which make up the Switching rate element include Local Switching, Line Termination and Intercept. End Office rate elements are set forth in 6.8.2 following. The application of the Switching rate element with respect to individual Feature Groups is as set forth in 6.7.1(D) following.

ACCESS SERVICE

6. Switched Access Service (Cont'd)

6.1 General (Cont'd)

6.1.2 Rate Categories (Cont'd)

(B) End Office (Cont'd)

(1) Switching

(a) Local Switching

Local Switching provides for the use of end office switching equipment.

Where end offices are appropriately equipped, international dialing may be provided as a capability associated with LS which provides local dial switching for Feature Group D. International dialing provides the capability of switching international calls with service prefix and address codes having more digits than are capable of being switched through a standard FGD equipped end office.

Rates for LS are set forth in 6.8.2 (A) following.

There are two types of local switching functions, i.e., Common Switching functions and Transport Termination functions. These are described in (i) and (ii) following.

ACCESS SERVICE

6. Switched Access Service (Cont'd)

6.1 General (Cont'd)

6.1.2 Rate Categories (Cont'd)

(B) End Office (Cont'd)

(1) Switching (Cont'd)

(a) Local Switching (Cont'd)

(i) Common Switching

Common Switching provides the local end office switching functions associated with the various access (i.e., Feature Group) switching arrangements. The Common Switching arrangements provided for the various Feature Group arrangements are described in 6.2 following.

ACCESS SERVICE

6. Switched Access Service (Cont'd)

6.1 General (Cont'd)

6.1.2 Rate Categories (Cont'd)

(B) End Office (Cont'd)

(1) Switching (Cont'd)

(a) Local Switching (Cont'd)

(i) Common Switching (Cont'd)

Included as part of Common Switching are various nonchargeable optional features which the customer can order to meet the customer's specific communications requirements. These optional features are described in 6.3.1 following.

(ii) Transport Termination

Transport Termination provides for the line or trunk side arrangements which terminate the Local Transport facilities. Included as part of Transport Termination are various nonchargeable optional termination arrangements. These optional terminating arrangements are described in 6.3.2 following.

The number of Transport Terminations provided will be determined by the Telephone Company as set forth in 6.5.6 following.

(b) Line Termination

Line Termination provides the terminations for the end user lines terminating in the local end office. There are two types of Line Terminations, i.e., Common Line Terminations and Special Access Service Terminations utilized in the provision of WATS or WATS-type services at Telephone Company designated WATS Serving Offices.

ACCESS SERVICE

6. Switched Access Service (Cont'd)

6.1 General (Cont'd)

6.1.2 Rate Categories (Cont'd)

(B) End Office (Cont'd)

(1) Switching (Cont'd)

(b) Line Termination (Cont'd)

The above Special Access Service Terminations are differentiated by line side vs. trunk side terminations. In addition, there are various types of originating and terminating line side terminations depending on the type of signaling associated with the Special Access Service. Line side terminations are available with either dial pulse or dual tone multi frequency address signaling.

(c) Intercept

Intercept provides for the termination of a call at a Telephone Company Intercept operator or ecording. The operator or recording tells a caller why a call, as dailed, could not be completed, and if possible, provides the correct number.

(2) Directory Assistance Information Surcharge

Directory Assistance Information Surcharge rates are assessed to a customer based on the total number of access minutes. Directory Assistance Information Surcharge rates are as set forth in 6.8.2 following.

The number of end office switching transmission paths will be determined as set forth in 6.5.5 following.

ACCESS SERVICE

6. Switched Access Service (Cont'd)

6.1 General (Cont'd)

6.1.2 Rate Categories (Cont'd)

(B) End Office (Cont'd)

(3) End Office Direct Trunk Port

Charges for End Office Direct Trunk Ports, located on the trunk side of the end office, recover costs to terminate direct trunks. End Office Direct Trunk Ports are a flat-rate monthly charge as specified in 6.8.2 following assessed to the customer purchasing the dedicated trunk terminated at that port.

(4) End Office Common Trunk Port

Charges for DS-1 End Office Common Trunk Ports, located on the trunk side of the end office, recover costs to terminate common trunks. End Office Common Trunk Ports are per minute-of-use charge as specified in 6.8.2 following assessed to the customer of common transport trunks terminating at these ports.

6. Switched Access Service (Cont'd)

6.1 General (Cont'd)

6.1.2 Rate Categories (Cont'd)

(C) Chargeable Optional Features

Where facilities permit, the Telephone Company, will at the option of the customer, provide the following chargeable optional features.

(1) 8XX Data Base Access Service

8XX Data Base Access Service provides for customer identification of calls dialed by end users, based on the dialed 8XX number in the form 1+8XX+NXX-XXXX. The 8XX numbers are assigned to 8XX service subscribers in conformance with the North American Numbering Plan (NANP). 8XX number assignment will be made by the 8XX Service Management System (SMS/8XX) Administrator. The Telephone Company will perform carrier selection for each 8XX number call by querying a data base to determine the customer to whose point of termination the call is to be delivered and includes area of service routing which allows routing of 8XX calls by telephone companies to different interexchange carriers based on the Local Access Transport Area (LATA) in which the call originates. Unless the customer has ordered 8XX data base optional vertical services, it is then the responsibility of the customer to perform any further translation the subscriber deems necessary and route the call. Calls to 8XX number, for which a data base query returns a carrier identification for a carrier that has not ordered Switched Access Service, will be blocked.

ACCESS SERVICE

6. Switched Access Service (Cont'd)

6.1 General (Cont'd)

6.1.2 Rate Categories (Cont'd)

(C) Chargeable Optional Features (Cont'd)

(1) 8XX Data Base Access Service (Cont'd)

In addition to the carrier selection function performed, the data base can be used to provide various vertical service features. Charges for Vertical Service Features are in addition to Carrier Selection charges. These optional vertical features include:

- POTS translation of 8XX numbers (which is generally necessary for the routing of 8XX calls)

- Other Vertical Service Features (This charge is in addition to the POTS Translation Charge, if applicable)

  - Alternate POTS translation (which allows subscribers to vary the routing of 8XX calls based on factors such as time of day, day of week, specific dates, originating NPA-NXX-XXXX and/or percent allocation)

  - Multiple carrier routing (which allows subscriber to route to different carriers based on factors such as time of day, day of week, specific dates, originating NPA- NXX-XXXX and/or percent allocation)

  - Call validation (ensuring that calls originate from subscribed service areas)

  When Other Vertical Service Feature charge is applicable, only one charge will be assessed, regardless of the number of Other Vertical Service Features provided.

ACCESS SERVICE

6. Switched Access Service (Cont'd)

6.1 General (Cont'd)

6.1.2 Rate Categories (Cont'd)

(C) Chargeable Optional Features (Cont'd)

(1) 8XX Data Base Access Service (Cont'd)

(a) 8XX Data Base Queries

8XX data base charges, as set forth in 6.8.4 following, are associated with the carrier selection and vertical service features. The 8XX data base charges will be assessed by the Telephone Company on a per completed 8XX data base query basis even if the Telephone Company does not actually deliver the associated 8XX call to the customer or Interexchange Carrier (IXC).

An Independent Telephone Company (ITC) that subtends the Company's Service Switching Point (SSP) may elect, by notifying the Company in writing, to have the Company bill the ITC the 8XX data base query charges associated with 8XX calls originating from the ITC. If the ITC so elects and the Company can identify the originating end office for the 8XX data base queries associated with 8XX calls originating from the ITC, the ITC will be assessed the 8XX data base query charges, per completed query, for those 8XX calls that originate from the ITC. In this case, the ITC is responsible for billing the interexchange carriers (IXC) for 8XX data base charges based on the ITC's tariffed rate.

If the Company is unable to identify, for any reason, the originating end office for the 8XX data base queries (carrier selection and/or vertical features) associated with 8XX calls originating from a particular ITC that subtends the Company's SSP, the Company will bill the IXC directly for the 8XX data base queries.

ACCESS SERVICE

6. Switched Access Service (Cont'd)

6.1 General (Cont'd)

6.1.2 Rate Categories (Cont'd)

(C) Chargeable Optional Features (Cont'd)

(1) 8XX Data Base Access Service (Cont'd)

(a) 8XX Data Base Queries (Cont'd)

If the ITC subtending the Company's SSP does not elect to have the Company bill the ITC the 8XX data base query charges, the Company will bill the IXC the 8XX data base query charges associated with 8XX calls originating from the ITC. In this case, the ITC will not bill the IXC 8XX data base query charges.

The description and application of this service with respect to Feature Group D is as set forth in 6.7.1(D) following.

ACCESS SERVICE

6. Switched Access Service (Cont'd)

6.1 General (Cont'd)

6.1.2 Rate Categories (Cont'd)

(C) Chargeable Optional Features (Cont'd)

(2) Billing Name and Address

The Company will provide to telecommunications service providers or to the authorized billing agents of telecommunications service providers, the billing name and address (BNA) of the Company's subscribers with listed telephone numbers who use the Company's calling card or who authorize collect and third party calls to pay for a telecommunications service provider's services.

The Company will also disclose the BNA of the Company's subscribers with unlisted and nonpublished numbers, unless the unlisted or nonpublished subscriber affirmatively requests that its BNA not be disclosed. The Company will presume that unlisted and nonpublished subscribers consent to disclosure and use of their BNA if the subscriber does not make this affirmative request.

The Company will not disclose billing name and address information to any party other than a telecommunications service provider or an authorized billing and collection agent of a telecommunications provider.

No telecommunications service provider or authorized billing and collection agent of a telecommunications service provider shall use billing name and address information for any purpose other than the following:

(a) Billing customers for using telecommunications services of that service provider and collecting amounts due.

(b) Any purpose associated with the "equal access" requirements.

(c) Verification of service orders of new customers, identification of customers who have moved to a new address, fraud prevention, and similar nonmarketing purposes.

ACCESS SERVICE

6. Switched Access Service (Cont'd)

6.1 General (Cont'd)

6.1.2 Rate Categories (Cont'd)

(C) Chargeable Optional Features (Cont'd)

(2) Billing Name and Address (Cont'd)

In no case shall any telecommunications service provider or authorized billing and collection agent of a telecommunications service provider disclose the billing name and address information of any subscriber to any third party, except that a telecommunications service provider may disclose billing name and address information to its authorized billing and collection agent.

Requests for BNA on given telephone numbers will be accepted by the Company's Interexchange Carrier Service Center (ICSC) via letter or facsimile on letterhead of the telecommunications service provider or an authorized billing agent. The Company shall, barring any unforeseen circumstances, provide BNA information to the requesting party via first class U.S. Mail or facsimile within thirty (30) days of receipt of the BNA request.

The rates and charges for the provision of BNA, as set forth in 6.8.4 following, are associated with the matching of billing name and address to the given telephone number. The minimum monthly charge for the provisioning of BNA is $15.00.

6. Switched Access Service (Cont'd)

6.1 General (Cont'd)

6.1.2 Rate Categories (Cont'd)

(C) Chargeable Optional Features (Cont'd)

(3) Operator Transfer Services (Cont'd)

Operator Transfer Service may be provided with Feature Group D Switched Access Service at Telephone Company designated Operator Services location. Operator Transfer Service is an originating service. The rate is assessed per 0- call transferred to a customer's operator. An 0- call is considered transferred when the Telephone Company Operator activates the switch transferring the call to the designated customer and the customer acknowledges receipt.

In addition to the Operator Transfer Service charge described above and in 6.3.3 following, Feature Group D Switched Access rates and charges as set forth in 6.2.1 following and Carrier Common Line Charges set forth in 3.8.5 preceding will apply per minute of use for Operator Transfer Service.

Operator Transfer Service charges, provided for in this tariff, are applied only to those calls actually transferred by the Telephone Company to the customer's operator.

6. Switched Access Service (Cont'd)

6.1 General (Cont'd)

6.1.3 Special Facilities Routing

Any customer may request that the facilities used to provide Switched Access Service be specially routed. The regulations, rates and charges for Special Facilities Routing (i.e., Avoidance, Diversity and Cable-Only) are set forth in 11. following.

6.1.4 Design Layout Report

At the request of the customer, the Telephone Company will provide to the customer the makeup of the facilities and services provided from the customer's premises to the first point of switching. This information will be provided in the form of a Design Layout Report. The Design Layout Report will be provided to the customer at no charge, and will be reissued or updated whenever these facilities are materially changed.

6.1.5 Testing

(A) Acceptance Testing

At no additional charge, the Telephone Company will, at the customer's request, cooperatively test at the time of installation, the following parameters: loss, C-notched noise, C-message noise, 3-tone slope, d.c. continuity and operational signaling. When the Local Transport is provided with Interface Groups 2 through 10, and the Transport Termination is two-wire (i.e., there is a four-wire to two-wire conversion in Local Transport), balance parameters (equal level echo path loss) may also be tested.

(B) Routine Testing

At no additional charge, the Telephone Company will, at the customer's request, test after installation on an automatic or manual basis, 1004 Hz loss, C-message noise and Balance (Return loss).

In the case of automatic testing, the customer shall provide remote office test lines and 105 test lines with associated responders or their functional equivalent.

ACCESS SERVICE

6. Switched Access Service (Cont'd)

6.1 General (Cont'd)

6.1.5 Testing (Cont'd)

(B) (Cont'd)

The frequency of these tests will be that which is mutually agreed upon by the customer and the Telephone Company, but shall consist of not less than quarterly 1004 Hz Loss and C-message noise tests and an annual Balance test. Trunk test failures requiring customer participation for trouble resolution will be provided to the customer on an as-occurs basis.

Additional tests may be ordered as set forth in 9.3.2(A) following. Charges for these additional tests are set forth in 9.4.2 following.

6.1.6 Ordering Options and Conditions

Switched Access Service is ordered under the Access Order provisions set forth in 5.2 preceding. Also, included in that section are other charges which may be associated with ordering Switched Access Service (e.g., Service Date Change Charges, Cancellation Charges, etc.).

6. Switched Access Service (Cont'd)

6.2 Provision and Description of Switched Access Service Feature Groups

Switched Access Service is provided in two different Feature Group arrangements. The provision of each Feature Group requires Local Transport facilities including an Entrance Facility where required, and the appropriate End Office functions.

There are three specific transmission specifications (i.e., Types A, B and C) that have been identified for the provision of Feature Groups. The technical specifications for the Entrance Facility and Direct-Trunked Transport are the same as those set forth in Section 7 following for High Capacity Services. The specifications provided are dependent on the Interface Group and the routing of the service, i.e., whether the service is routed directly to the end office or via an access tandem. The parameters for the transmission specifications are set forth in 10.2.1 following.

Feature Groups are arranged for either originating, terminating or two-way calling, based on the customer end office switching capacity ordered. Originating calling permits the delivery of calls from Telephone Exchange Service locations to the customer designated premises. Terminating calling permits the delivery of calls from the customer designated premises to Telephone Exchange Service locations. Two-way calling permits the delivery of calls in both directions, but not simultaneously. The Telephone Company will determine the type of calling to be provided unless the customer requests that a different type of directional calling is to be provided. In such cases, the Telephone Company will work cooperatively with the customer to determine the directionality.

There are various optional features available with the Feature Groups. These additional optional features are provided as Local Transport, Common Switching, Transport Termination, 8XX Data Base Access Service, and Operator Transfer Service.

ACCESS SERVICE

6. Switched Access Service (Cont'd)

6.2 Provision and Description of Switched Access Service Feature Groups (Cont'd)

The Common Switching and Transport Termination optional features, which are described in 6.3 following, unless specifically stated otherwise, are available at all Telephone Company end office switches.

6.2.1 Feature Group D (FGD)

(A) Description

(1) FGD is provided at Telephone Company designated electronic end office switches whether routed directly or via Telephone Company designated electronic access tandem switches.

(2) FGD is provided as trunk side switching through the use of end office or access tandem switch trunk equipment. The switch trunk equipment is provided with wink start start-pulsing signals and answer and disconnect supervisory signaling.

(3) FGD switching is provided with multifrequency address signaling or out of band SS7 signaling. With multi-frequency address signaling and SS7 signaling, up to 12 digits of the called party number dialed by the customer's end user using dual tone multifrequency or dial pulse address signals will be provided by Telephone Company equipment to the customer's premises where the Switched Access Service terminates. Such address signals will be subject to the ordinary transmission capabilities of the Local Transport provided.

ACCESS SERVICE

6. Switched Access Service (Cont'd)

6.2 Provision and Description of Switched Access Service Feature Groups (Cont'd)

6.2.1 Feature Group D (FGD) (Cont'd)

(A) Description (Cont'd)

(4) FGD switching, when used in the terminating direction, may be used to access valid NXXs in the LATA, time or weather announcement services of the Telephone Company, community information services of an information service provider, and other customers' services (by dialing the appropriate codes) when such services can be reached using valid NXX codes. When directly routed to an end office, only those valid NXX codes served by that office may be accessed. When routed through an access tandem, only those valid NXX codes served by end offices subtending the access tandem may be accessed. The customer will also be billed additional non-access charges for calls to certain community information services, for which rates are applicable under Telephone Company exchange service tariffs, e.g., 976 (DIAL-IT) Network Service. Additionally, non-access charges will also be billed for calls from a FGD trunk to another customer's service in accordance with that customer's applicable service rates when the Telephone Company performs the billing function for that customer. Calls in the terminating direction will not be completed to 950-0XXX or 950-1XXX access codes, local operator assistance (0- and 0+), Directory Assistance (411 and 555-1212), service codes 611 and 911 and 101XXXX access codes. Calls will be completed to Directory Assistance (NPA-555-1212 or 555-1212) when FGD switching is combined with Directory Assistance switching. FGD may not be switched, in the terminating direction, to Switched Access Service Feature Groups B, C or D.

ACCESS SERVICE

6. Switched Access Service (Cont'd)

6.2 Provision and Description of Switched Access Service Feature Groups (Cont'd)

6.2.1 Feature Group D (FGD) (Cont'd)

(A) Description (Cont'd)

(5) The Telephone Company will establish a trunk group or groups for the customer at end office switches or access tandem switches where FGD switching is provided. When required by technical limitations, a separate trunk group will be established for each type of FGD switching arrangement provided. Different types of FGD or other switching arrangements may be combined in a single trunk group at the option of the Telephone Company.

(6) The access code for FGD switching is a uniform access code of the form 101XXXX. A single access code will be the assigned number of all FGD access provided to the customer by the Telephone Company. No access code is required for calls to a customer over FGD Switched Access Service if the end user's telephone exchange service is arranged for presubscription to that customer, as set forth in 9.5.2 following.

Where no access code is required, the number dialed by the customer's end user shall be a seven or ten digit number for calls in the North American Numbering Plan (NANP). For international calls outside the NANP, a seven to twelve digit number may be dialed. The form of the numbers dialed by the customer's end user is NXX-XXXX, 0 or 1 + NXX-XXXX, NPA + NXX-XXXX, 0 or 1 + NPA + NXX-XXXX, and, when the end office is equipped for International Direct Distance Dialing (IDDD), 01 + CC + NN or 011 + CC + NN.

ACCESS SERVICE

6. Switched Access Service (Cont'd)

6.2 Provision and Description of Switched Access Service Feature Groups (Cont'd)

6.2.1 Feature Group D (FGD) (Cont'd)

(A) Description (Cont'd)

(6) (Cont'd)

When the 101XXXX access code is used, FGD switching also provides for dialing the digit 0 for access to the customer's operator, 911 for access to the Telephone Company's emergency reporting service, or the end-of-dialing digit (#) for cut-through access to the customer's premises.

(7) FGD switching will be arranged to accept calls from telephone exchange service locations without the need for dialing 101XXXX uniform access code. Each telephone exchange service line may be marked with a code to identify which 101XXXX code its calls will be directed to for interLATA service.

(8) Unless prohibited by technical limitations, the customer's 8XX and NXX Access Service traffic may, at the option of the customer, be combined in the same trunk group arrangement with the customer's non-500, non-8XX and non-900 Access Service traffic. When required by technical limitations, or at the request of the customer, a separate trunk group will be established for 8XX and Access Service traffic.

6. Switched Access Service (Cont'd)

6.2 Provision and Description of Switched Access Service Feature Groups (Cont'd)

6.2.1 Feature Group D (FGD) (Cont'd)

(A) Description (Cont'd)

(10) Operator Transfer Service (forwarding of 0- calls) may be provided with FGD Switched Access Service at Telephone Company designated Operator Services locations.

The Telephone Company will provide Operator Transfer Service for calls originating from telephone numbers associated with exchange service lines in end offices subtending the Operator Services location. Operator Transfer Service is provided as set forth in 6.3.3 following.

ACCESS SERVICE

6. Switched Access Service (Cont'd)

6.2 Provision and Description of Switched Access Service Feature Groups (Cont'd)

6.2.1 Feature Group D (FGD) (Cont'd)

(B) Optional Features

(1) Common Switching Optional Features

(a) Automatic Number Identification (ANI)
(b) Service Class Routing
(c) Alternate Traffic Routing
(d) Call Gapping Arrangement
(e) Trunk Access Limitation
(f) International Carrier Option
(g) End Office End User Line Service Screening for Use with Special Access Service utilized in the provision of WATS or WATS-type Services
(h) Hunt Group Arrangement for Use with Special Access Service utilized in the provision of WATS or WATS-type Services
(i) Uniform Call Distribution Arrangement for Use with Special Access Service utilized in the provision of WATS or WATS-type Services
(j) Nonhunting Number for Use with Hunt Group Arrangement or Uniform Call Distribution Arrangement for use with Special Access Service utilized in the provision of WATS or WATS-type Services
(k) Band Advance Arrangement for Use with Special Access Service utilized in the provision of WATS or WATS-type Services
(l) Delay Dial Start-Pulsing Signaling
(m) Digital Switched 56 Service

(2) Transport Termination Optional Features

(a) Operator Trunk, Full Feature Arrangement

ACCESS SERVICE

6. Switched Access Service (Cont'd)

6.2 Provision and Description of Switched Access Service Feature Groups (Cont'd)

6.2.1 Feature Group D (FGD) (Cont'd)

(B) Optional Features (Cont'd)

(3) Local Transport Optional Features

(a) Supervisory Signaling (as set forth in 6.1.2(A)(2)(a) preceding)

(b) Signaling System 7 (SS7)

The SS7 optional feature allows the customer to send and receive signals for out of band call set up and is available with Feature Group D. This option requires the establishment of a signaling connection between the customer's designated premises/Signaling Point of Interface and a Telephone Company's Signaling Transfer Point (STP).

SS7 is provided in both the originating and terminating direction on FGD and each signaling connection is provisioned for two-way SS7 signaling information.

(c) Multifrequency Address Signaling

(d) Calling Party Number (CPN) Parameter

(e) Charge Number Parameter (CNP)

(f) Carrier Selection Parameter (CSP)

(4) Chargeable Optional Features

(a) 8XX Data Base Access Service (as set forth in 6.3.3 following).

(b) Common Channel Signaling/Signaling System 7 (CCS/SS7) Network Connection Service (CCSNC)

The CCSNC Optional Feature is provided as set forth in 6.3.3(C) following.

ACCESS SERVICE

6. Switched Access Service (Cont'd)

6.2 Provision and Description of Switched Access Service Feature Groups (Cont'd)

6.2.1 Feature Group D (FGD) (Cont'd)

(B) Optional Features (Cont'd)

(4) Chargeable Optional Features (Cont'd)

(c) CIC and OZZ Signaling Information (COSI)

The COSI optional feature is provided as set forth in 6.3.3(C) following.

(d) Operator Transfer Service

The Operator Transfer Services Optional Feature is provided as set forth in 6.3.3(D) following.

(e) Clear Channel Capability (CCC)

The CCC optional feature is provided as set forth in 6.3.3(E) following.

6. Switched Access Service (Cont'd)

6.2 Provision and Description of Switched Access Service Feature Groups (Cont'd)

6.2.1 Feature Group D (FGD) (Cont'd)

(C) Transmission Specifications

FGD is provided with either Type A, Type B or Type C Transmission Specifications as follows:

- When routed directly to the end office either Type B or C is provided.

- When routed to an access tandem only Type A is provided.

- Type A is provided on the transmission path from the access tandem to the end office.

Type C Transmission Specifications are provided with Interface Group 1. Type A and Type B Transmission Specifications are provided with Interface Groups 2 through 10.

Type DA Data Transmission Parameters are provided for the transmission path between the customer's premises and the access tandem and between the access tandem and the end office when routed via an access tandem. Type DB Data Transmission Parameters are provided with FGD for the transmission path between the customer's premises and the end office when directly routed to the end office.

(D) Testing Capabilities

FGD is provided, in the terminating direction where equipment is available, with seven digit access to balance (100 type) test line, milliwatt (102 type) test line, nonsynchronous or synchronous test line, automatic transmission measuring (105 type) test line, data transmission (107 type) test line, loop around test line, short circuit test line and open circuit test line. In addition to the tests described in 6.1.5 preceding which are included with the installation of service, and as ongoing routine testing, Additional Cooperative Acceptance Testing, Additional Automatic Testing, and Additional Manual Testing, are available as set forth in 9.3.2 following.

ACCESS SERVICE

6. Switched Access Service (Cont'd)

6.2 Provision and Description of Switched Access Service Feature Groups (Cont'd)

6.2.1 Feature Group D (FGD) (Cont'd)

(D) Testing Capabilities (Cont'd)

When SS7 Signaling is ordered, network compatibility and other testing will be performed cooperatively by the Telephone company and the customer as specified in Technical References TR-TSV 000905.

ACCESS SERVICE

6. Switched Access Service (Cont'd)

6.3 Chargeable and Nonchargeable Optional Features

Following are descriptions of the various optional features that are available in lieu of, or in addition to, the standard features provided with the Feature Groups. They are provided as either Common Switching, Transport Termination, and 8XX Data Base Access Service options or Operator Transfer Service option.

6.3.1 Common Switching Nonchargeable Optional Features

(A) Automatic Number Identification (ANI)

This option provides the automatic transmission of a seven or ten digit number and information digits to the customer designated premises for calls originating in the LATA, to identify the calling station. The ANI feature is an end office software function which is associated on a call-by-call basis with (1) all individual transmission paths in a trunk group routed directly between an end office and a customer designated premises or, where technically feasible, with (2) all individual transmission paths in a trunk group between an end office and an access tandem, and a trunk group between an access tandem and a customer designated premises.

The ten digit ANI telephone number is only available with Feature Group D. The ten digit ANI telephone number consists of the Numbering Plan Area (NPA) plus the seven digit ANI telephone number. The ten digit ANI telephone number will be transmitted on all calls except those identified as multiparty line or ANI failure, in which case only the NPA will be transmitted (in addition to the information digit described below). Ten digit ANI is provided with multifrequency address signaling or SS7 signaling.

ACCESS SERVICE

6. Switched Access Service (Cont'd)

6.3 Chargeable and Nonchargeable Optional Features (Cont'd)

6.3.1 Common Switching Nonchargeable Optional Features (Cont'd)

(A) Automatic Number Identification (ANI) (Cont'd)

The information digits identify: (1) telephone number is the station billing number - no special treatment required, (2) multiparty line - telephone number is a 4- or 8-party line and cannot be identified - number must be obtained via an operator or in some other manner, (3) ANI failure has occurred in the end office switch which prevents identification of calling telephone number - must be obtained by operator or in some other manner, (4) hotel/motel originated call which requires room number identification, (5) coinless station, hospital, inmate, etc. call which requires special screening or handling by the customer, and (6) call is an Automatic Identified Outward Dialed (AIOD) call from customer premises equipment. The ANI telephone number is the listed telephone number of the customer and is not the telephone number of the calling party.

Additional ANI information digits are available with Feature Group D only. They include:

1) InterLATA restricted - telephone number is identified line

2) InterLATA restricted - hotel/motel line

3) InterLATA restricted - coinless, hospital, inmate, etc., line

These information digits will be transmitted as agreed to by the customer and the Telephone Company.

ACCESS SERVICE

6. Switched Access Service (Cont'd)

6.3 Chargeable and Nonchargeable Optional Features (Cont'd)

6.3.1 Common Switching Nonchargeable Optional Features (Cont'd)

(B) Delay Dial Start-Pulsing Signaling

This option provides a method of indicating to the near end trunk circuit readiness to accept address signaling information by the far end trunk circuit. Delay dial is often referred to as an off-hook, on-hook signaling sequence. The delay dial signal is the off-hook interval and the start-pulsing signal is the on-hook interval. With integrity check, the calling office will not outpulse until a delay dial (off-hook) signal followed by a start-pulsing (on-hook) signal has been identified at the calling office. This option is available with Feature Group D.

(C) Service Class Routing

This option provides the capability of directing originating traffic from an end office to a trunk group to a customer designated premises, based on the line class of service (e.g., coin, multiparty or hotel/motel), service prefix indicator (e.g., 0-, 0+, 01+ or 011+) or service access code (e.g., 800 or 900). It is provided in suitably equipped end office or access tandem switches and is available with Feature Group D.

6. Switched Access Service (Cont'd)

6.3 Chargeable and Nonchargeable Optional Features (Cont'd)

6.3.1 Common Switching Nonchargeable Optional Features (Cont'd)

(D) Alternate Traffic Routing

When the customer orders both Direct-Trunked Transport and Tandem-Switched Transport at the same end office, this option provides the capability of directing originating traffic from an end office (or appropriately equipped access tandem) to a trunk group (the "high usage" group) to a customer designated premises until that group is fully loaded, and then delivering additional originating traffic (the "overflowing" traffic) from the same end office or access tandem to a different trunk group (the "final" group) to a second customer designated premises. The customer shall specify the last trunk CCS desired for the high usage group. It is provided in suitably equipped end office or access tandem switches and is available with Feature Group D.

(E) Trunk Access Limitation

This option provides for the routing of originating 500 and 900 NXX service calls to a specified number of transmission paths in a trunk group, in order to limit (choke) the completion of such traffic to the customer. Calls to the designated service which could not be completed over the subset of transmission paths in the trunk group, i.e., the choked calls, would be routed to reorder tone. It is provided in all Telephone Company electronic end offices and where available in electromechanical end offices. It is available with Feature Group D.

ACCESS SERVICE

6. Switched Access Service (Cont'd)

6.3 Chargeable and Nonchargeable Optional Features (Cont'd)

6.3.1 Common Switching Nonchargeable Optional Features (Cont'd)

(F) Call Gapping Arrangement

This option, provided in suitably equipped end office switches, provides for the routing of originating calls to 500 or 900 service to be switched in the end office to all transmission paths in a trunk group at a prescribed rate of flow, e.g., one call every five seconds, in order to limit (choke) the completion of such traffic to the customer. Calls to the designated service which are denied access by this feature, i.e., the choked calls, would be routed to a no-circuit announcement. It is provided in selected Feature Group D equipped end offices and is available only with Feature Group D.

(G) International Carrier Option

This option allows for Feature Group D end offices or access tandem switches equipped for International Direct Distance Dialing to be arranged to forward the international calls of one or more international carriers to the customer (i.e., the Telephone Company is able to route originating international calls to a customer other than the one designated by the end user either through presubscription or 101XXXX dialing). This arrangement requires provision of written verification to the Telephone Company that the customer is authorized to forward such calls. The written verification must be in the form of a letter of agency authorizing the customer to order the option on behalf of the international carrier. This option is only provided at Telephone Company end offices or access tandems equipped for International Direct Distance Dialing. It is available with Feature Group D.

ACCESS SERVICE

6. Switched Access Service (Cont'd)

6.3 Chargeable and Nonchargeable Optional Features (Cont'd)

6.3.1 Common Switching Nonchargeable Optional Features (Cont'd)

(H) Band Advance Arrangement for Use with Special Access Service Utilized in the Provision of WATS or WATS-Type Services

This option, which is provided in association with two or more Special Access Service groups, provides for the automatic overflow of terminating calls to a second Special Access Service group, when the first group has exceeded its call capacity. This option is available with Feature Group D.

(I) End Office End User Line Service Screening for Use with Special Access Service Utilized in the Provision of WATS or WATS-Type Services

This option provides the ability to verify that an end user has dialed a called party address (by screening the called NPA and/or NXX on the basis of geographical bands selected by the Telephone Company) which is in accordance with that end user's service agreement with the customer, e.g., WATS. This option is provided in all Telephone Company electronic end offices and, where available, in electromechanical end offices which are designated as WATS Serving Offices. It is available with Feature Group D.

ACCESS SERVICE

6. Switched Access Service (Cont'd)

6.3 Chargeable and Nonchargeable Optional Features (Cont'd)

6.3.1 Common Switching Nonchargeable Optional Features (Cont'd)

(J) Hunt Group Arrangement for Use with Special Access Service Utilized in the Provision of WATS or WATS-Type Services

This option provides the ability to sequentially access one of two or more Special Access Services utilized in the provision of WATS or WATS-type services (e.g., 8XX Service Special access services) in the terminating direction, when the hunting number of the Special Access Service group is forwarded from the customer to the Telephone Company. This feature is provided in all Telephone Company designated WATS Serving Offices. It is available with Feature Group D.

(K) Uniform Call Distribution Arrangement for Use with Special Access Service Utilized in the Provision of WATS or WATS-Type Services

This option provides a type of multiline hunting arrangement which provides for an even distribution of terminating calls among the available Special Access Services utilized in the provision of WATS or WATS-type Services in the hunt group. Where available, this feature is only provided in Telephone Company designated WATS Serving Offices. It is available with Feature Group D.

ACCESS SERVICE

6. Switched Access Service (Cont'd)

6.3 Chargeable and Nonchargeable Optional Features (Cont'd)

6.3.1 Common Switching Nonchargeable Optional Features (Cont'd)

(L) Nonhunting Number for Use with Hunt Group Arrangement or Uniform Call Distribution Arrangement for Use with Special Access Service Utilized in the Provision of WATS or WATS-Type Services

This option provides an arrangement for an individual Special Access Service utilized in the provision of WATS or WATS-type Services within a multiline hunt or uniform call Distribution group that provides access to that Special Access Service within the hunt or uniform call distribution group when it is idle or provides busy tone when it is busy, when the nonhunting number is dialed. Where available, this feature is only provided in Telephone Company designated WATS Serving Offices. It is available with Feature Group D.

(M) Digital Switched 56 Service

This option provides for a connection between a customer's premise and a suitably equipped end user's premise which uses end office switching and facilities capable of transmitting digital data up to 56 Kilobits per second. Digital Switched 56 Service is only available in appropriately provisioned Feature Group D offices as set forth in National Exchange Carrier Association, Inc. Tariff F.C.C. No. 4.

6. Switched Access Service (Cont'd)

6.3 Chargeable and Nonchargeable Optional Features (Cont'd)

6.3.1 Common Switching Nonchargeable Optional Features (Cont'd)

(N) Signaling System 7 (SS7) Signaling

This feature provides common channel out of band transmission of address and supervisory SS7 protocol signaling information between the end office switch or the tandem office switching system and the customer's designated premises. The signaling information is transmitted over facilities provided with the Common Channel Signaling/Signaling System 7 Interconnection Service as specified in 6.1.3(A)(3) preceding. This feature is available with FGD and will be provided in accordance with the SS7 Interconnect specifications described in Technical Reference TR-TSV-000905.

(O) Calling Party Number (CPN)

This feature provides for the automatic transmission of the ten digit directory number, associated with a calling station, to the customer's premises for calls originating in the LATA. The ten digit telephone number consists of the NPA plus the seven digit telephone number, which may or may not be the same number as the calling station's charge number. The ten digit telephone number will be coded as presented, or restricted via a "privacy indicator" for delivery to the called end user. This feature is provided with originating FGD with SS7 signaling. CPN is available where technically feasible.

6. Switched Access Service (Cont'd)

6.3 Chargeable and Nonchargeable Optional Features (Cont'd)

6.3.1 Common Switching Nonchargeable Optional Features (Cont'd)

(P) Carrier Selection Parameter (CSP)

This feature provides for the automatic transmission of a signaling indicator which signifies to the customer whether or not the call being processed originated from a presubscribed line. If the line was presubscribed, the indicator will signify if the end user did or did not dial 101XXXX. This feature is provided with originating FGD with SS7 signaling.

(Q) Charge Number Parameter (CN)

The CN Parameter is equivalent to the existing ten digit Automatic Number Identification (ANI) available with FGC where technically feasible and FGD with MF signaling. The CN Parameter provides for the automatic transmission of the ten digit billing number of the calling station and the originating line information. This feature is provided with originating FGD with SS7 signaling.

6.3.2 Transport Termination Nonchargeable Optional Features

Operator Trunk - Full Feature

This option provides the initial coin return control function to the customer's operator. It is available with Feature Group D and is provided as a trunk type for Transport Termination. This feature is not available with SS7 signaling.

ACCESS SERVICE

6. Switched Access Service (Cont'd)

6.3 Chargeable and Nonchargeable Optional Features (Cont'd)

6.3.3 Chargeable Optional Features

(A) 8XX Data Base Access Service

The 8XX Data Base Access Service optional feature is an originating offering utilizing trunk side Switched Access Service. The service provides carrier selection and optional vertical services based on the dialed 8XX number.

When a 1+8XX+NXX-XXXX call is originated by an end user, the Telephone Company will perform the carrier selection function by querying a data base to determine the customer to whose point of termination the call is to be delivered. Unless the customer has ordered optional vertical services, as described in 6.1.2(C)(2) preceding, it is then the responsibility of the customer to perform any further translation the subscriber deems necessary and route the call. Calls to 8XX numbers, for which a data base query returns a carrier identification for a carrier that has not ordered Switched Access Service, will be blocked.

ACCESS SERVICE

6. Switched Access Service (Cont'd)

6.3 Chargeable and Nonchargeable Optional Features (Cont'd)

6.3.3 Chargeable Optional Features (Cont'd)

(B) Common Channel Signaling/Signaling System 7 Network Connection Service (CCSNC)

Common Channel Signaling/Signaling System 7 (CCS/SS7) Network Connection Service (CCSNC), which is available with Feature Group D, where technically feasible as designated in NATIONAL EXCHANGE CARRIER ASSOCIATION, INC TARIFF FCC NO. 4, WIRE CENTER INFORMATION, provides a signaling path between a customer's designated Signaling Point of Interface (SPOI) and a Signaling Transfer Point (STP). This service provides customers with the use of a two-way signaling path for accessing information necessary for the completion of their end user's calls.

CCS/SS7 Network Connection Service is comprised of two rate elements; a Signaling Network Access Link (SNAL) and a Signaling Transfer Point (STP) Port. The SNAL is provided as a dedicated 56 Kbps out-of-band signaling connection between the customer's SPOI and the STP port on the STP.

The CCS/SS7 Network Connection Service is provisioned by a mated pair of STPs as described in Technical Reference TR-TSV 000905 in order to ensure network availability and reliability. The Telephone Company shall not be held liable for service outages if the customer employs technology related to the interconnection of signaling networks that does not adhere to generally accepted industry technical standards.

When CCS/SS7 Network Connection service is provisioned for use with SS7 Signaling, interconnection between signaling networks must occur at an STP.

Rates and charges for the CCS/SS7 Network Connection STP Ports and Signaling Network Access Links are contained in 6.8.1(C) following.

ACCESS SERVICE

6. Switched Access Service (Cont'd)

6.3 Chargeable and Nonchargeable Optional Features (Cont'd)

6.3.3 Chargeable Optional Features (Cont'd)

(C) CIC and OZZ Signaling Information (COSI)

CIC and OZZ Signaling Information is only available with Feature Group D Direct-Trunked Transport, as set forth in 6.1.2(A)(2) preceding, ordered from an equal access end office switch. It is not available from the Telephone Company access tandem.

CIC and OZZ Signaling Information provides the Carrier Identification Code (CIC) and OZZ digits needed to perform tandem switching functions for switched transport services. This signaling information can be ordered: (1) as multifrequency (MF) address signaling or (2) where technically feasible, as CCS/SS7 signaling. For customers ordering the CCS/SS7 signaling option, out of band signaling interconnection is required at the STP level as offered in this tariff through its Common Channel Signaling Network Connection (CCSNC) service, which is described in 6.3.3(C) preceding.

When the Telephone Company's customer of record (COR) selects the CIC and OZZ Signaling Information option for 2-way Direct-Trunked Transport service, the Alternate Tandem Switching Provider (ATSP) that provides the tandem switching function shall record the terminating traffic on behalf of the Telephone Company, as specified in a Letter of Agreement. The originating traffic shall be recorded by the Telephone Company's originating end office.

The Letter of Agreement, which shall be mutually agreed upon by the ATSP and the Telephone Company, shall include: (1) the ATSP's obligations regarding frequency, delivery, timing, and testing of terminating usage tapes (or other automated transmission); (2) audit provisions; (3) dispute/discrepancy resolution; and (4) penalties imposed on the ATSP for untimely usage transmission which results in delayed Telephone Company revenue. The Telephone Company shall work cooperatively with the ATSP to develop a Letter of Agreement. The Telephone Company shall provide 30-day written notice of any changes to the Letter of Agreement.

ACCESS SERVICE

6. Switched Access Service (Cont'd)

6.3 Chargeable and Nonchargeable Optional Features (Cont'd)

6.3.3 Chargeable Optional Features (Cont'd)

(C) CIC and OZZ Signaling Information (COSI) (Cont'd)

In cases involving the above-mentioned Letter of Agreement, the ATSP is responsible for recording all terminating traffic of 2-way Direct-Trunked Transport service when the CIC and OZZ Signaling Information option is also selected and providing this data on an industry standard terminating usage tape (or other automated transmission) to the Telephone Company. The Telephone Company shall bill the customer of record for the terminating portion of the 2-way service. The data format of this ATSP-provided usage tape (or other automated transmission) must conform to Detail Category 11 Exchange Message Records (Detail Cat. 11 EMR) as described in the Bellcore Practice BR 010-200-010, "CRIS Exchange Message Record."

If the ATSP performing the tandem switching function can not or does not enter into a Letter of Agreement regarding special recording arrangements, the customer shall order 1-way Direct-Trunked Transport service with the CIC and OZZ Signaling Information option for originating traffic and a separate 1-way Direct-Trunked Transport service for terminating traffic. All originating traffic for this 1-way Direct-Trunked Transport service shall be recorded by the Telephone Company's originating end office and billed to the originating end user's presubscribed interexchange carrier (PIC). All terminating traffic for the separate 1-way Direct-Trunked Transport service shall be recorded by the Telephone Company's terminating end office and billed to the customer of record.

Rates and charges for the CIC and OZZ Signaling Information are contained in 6.8.1(D) following.

ACCESS SERVICE

6. Switched Access Service (Cont'd)

6.3 Chargeable and Nonchargeable Optional Features (Cont'd)

6.3.3 Chargeable Optional Features (Cont'd)

(D) Operator Transfer Service

At the option of the customer, Operator Transfer Service as specified following, is available for use with Feature Group D Switched Access Service. Operator Transfer Service is ordered as set forth in 5.2 preceding and is provided to the customer via separate FGD trunks dedicated to Operator Transfer Service traffic.

Operator Transfer Service is an arrangement in which Telephone Company operators transfer 0 minus (0-) calls (calls for which the end user dials 0 with no additional digits) to the customer designated by the end user.

The operator transfer function will be performed in the following manner:

- The operator answers the 0- call.

- Initially, the Operator will suggest that the end user dial the customer on a direct basis. If the end user insists that the Operator transfer the call, the Operator will ask the end user to identify the desired customer and will then transfer the call as directed.

- If the end user has no preference, or the identified customer has not subscribed to Operator Transfer Service, the end user will be asked to select from a list of available customers.

ACCESS SERVICE

6. Switched Access Service (Cont'd)

6.3 Chargeable and Nonchargeable Optional Features (Cont'd)

6.3.3 Chargeable Optional Features (Cont'd)

(D) Operator Transfer Service (Cont'd)

The list of available Operator Transfer Service customers will be updated monthly. The order in which customers will be read to end users will be initially determined by the sequence in which customers have ordered the Operator Transfer Service. For each subsequent month, following the initial order for Operator Transfer Service, the customer in the first position on the list will be moved to the last position on the list. All other customers on the list will be moved up one position, e.g. 3rd to 2nd, 2nd to first, etc. New Operator Transfer Service customers will initially be placed at the bottom of the list of customers.

All non-recurring and usage sensitive rates and charges normally applicable to Feature Group D apply to Operator Transfer Service. Additionally, a charge as specified in 6.1.2(C)(4) preceding and 6.8.5 following, is assessed the customer per 0 minus call transferred.

(E) Clear Channel Capability (CCC)

CCC is available only with Feature Group D (FGD) Direct-Trunked Transport and is provided, subject to availability of facilities, as identified in NATIONAL EXCHANGE CARRIER ASSOCIATION, INC. TARIFF F.C.C. NO. 4, WIRE CENTER INFORMATION.

No charge applies when the CCC optional feature is ordered at the same time the Direct-Trunked FGD High Capacity Service is ordered. If the CCC optional feature is ordered as an addition to an existing High Capacity service, a nonrecurring charge is applicable as set forth in 6.8.1(D)(3) following. The customer must agree to out-of-service periods required to add this optional feature to an existing High Capacity Service.

The removal of the CCC optional feature from an existing High Capacity Service will be treated as a discontinuance of the existing service and an installation of new service. All associated nonrecurring installation charges will apply for the new service. A new minimum period will be established for the new service.

ACCESS SERVICE

6. Switched Access Service (Cont'd)

6.4 Transmission Specifications

Each Switched Access Service transmission path is provided with standard transmission specifications. There are three different standard specifications (Types A, B and C). The standard for a particular transmission path is dependent on the Feature Group, the Interface Group and whether the service is directly routed or via an access tandem. The available transmission specifications are set forth in 10.2.1 following. Data Transmission Parameters are also provided with each Switched Access Service transmission path. The Telephone Company will, upon notification by the customer that the data parameters set forth in 10.2.2(A) or 10.2.2(B) are not being met, conduct tests independently or in cooperation with the customer, and take any necessary action to insure that the data parameters are met.

The Telephone Company will maintain existing transmission specifications on functioning service configurations installed prior to the effective date of this tariff except that service configurations having performance specifications exceeding the standards listed in this provision will be maintained at performance levels specified in this tariff.

The transmission specifications concerning Switched Access Service are immediate action limits and are set forth in 10.2 following. Acceptance limits are set forth in Technical Reference TR-NPL-000334. This Technical Reference also provides the basis for determining Switched Access Service maintenance limits.

ACCESS SERVICE

6. Switched Access Service (Cont'd)

6.5 Obligations of the Telephone Company

In addition to the obligations of the Telephone Company set forth in 2. preceding, the Telephone Company has certain other obligations pertaining only to the provision of Switched Access Service. These obligations are as follows:

6.5.1 Network Management

The Telephone Company will administer its network to insure the provision of acceptable service levels to all telecommunications users of the Telephone Company's network services. Generally, service levels are considered acceptable only when both end users and customers are able to establish connections with little or no delay encountered within the Telephone Company network. The Telephone Company maintains the right to apply protective controls, i.e., those actions, such as call gapping, which selectively cancel the completion of traffic, over any traffic carried over its network, including that associated with a customer's Switched Access Service. Generally, such protective measures would only be taken as a result of occurrences such as failure or overload of Telephone Company or customer facilities, natural disasters, mass calling or national security demands. In the event that the protective controls applied by the Telephone Company result in the complete loss of service by the customer, the customer will be granted a Credit Allowance for Service Interruption as set forth in 2.4.4(B)(3) preceding.

6. Switched Access Service (Cont'd)

6.5 Obligations of the Telephone Company (Cont'd)

6.5.2 Design and Traffic Routing of Switched Access Service

(A) Feature Group D

For Feature Group D, the Telephone Company shall design and determine the routing of Tandem-Switched Transport service, including the selection of the first point of switching and the selection of facilities from the interface to any switching point and to the end offices where busy hour minutes of capacity are ordered. The Telephone Company shall also decide if capacity is to be provided by originating only, terminating only, or two-way trunk groups. Finally, the Telephone Company will decide whether trunk side access will be provided through the use of two-wire or four-wire trunk terminating equipment.

For Feature Group D Direct-Trunked Transport service, the Telephone Company will determine the routing of switched access service from the point of interface to the first point of switching or, if the customer specifies one or more hub locations for multiplexing, from the point of interface to the hub location, from one hub location to another hub location, and/or from a hub location to the first point of switching.

Selection of facilities and equipment and traffic routing of the service are based on standard engineering methods, available facilities and equipment, and actual traffic patterns.

6. Switched Access Service (Cont'd)

6.5 Obligations of the Telephone Company (Cont'd)

6.5.3 Provision of Service Performance Data

Subject to availability, end-to-end service performance data available to the Telephone Company through its own service evaluation routines, may also be made available to the customer based on previously arranged intervals and format. These data provide information on overall end-to-end call completion and non-completion performance, e.g., customer equipment blockage, failure results and transmission performance. These data do not include service performance data which are provided under other tariff sections, e.g., testing service results. If data are to be provided in other than paper format, the charges for such exchange will be determined on an individual case basis.

6.5.4 Trunk Group Measurement Reports

Subject to availability, the Telephone Company will make available trunk group data in the form of usage in CCS, peg count and overflow, to the customer based on previously agreed to intervals.

ACCESS SERVICE

6. Switched Access Service (Cont'd)

6.5 Obligations of the Telephone Company (Cont'd)

6.5.5 Determination of Number of Transmission Paths

For Feature Group D when ordered on a per trunk basis, the customer specifies the type of transport facilities and the number of channels in the order for service. For Tandem-Switched Transport, the Telephone Company will determine the number of Switched Access Service transmission paths to be provided for the Switched Access Feature Group D busy hour minutes of capacity ordered. A transmission path is a communication path within the frequency bandwidth of approximately 300 to 3000 Hz or a derived communication path of a frequency bandwidth of approximately 300 Hz to 3000 Hz provided over a high frequency analog facility or a high speed digital facility between a customer's premises and a Telephone Company location. The number of transmission paths will be developed using the total busy hour minutes of capacity by type (as described in 6.1.1(E) preceding) for the end offices for each Feature Group ordered from a customer's designated premises. The total busy hour minutes of capacity by type for the end office will be converted to transmission paths using standard Telephone Company traffic engineering methods. The number of transmission paths provided shall be the number required based on (1) the use of access tandem switches and end office switches, (2) the use of end office switches only, or (3) the use of tandem switches only.

6.5.6 Determination of Number of End Office Transport Terminations

For analog entry switches, a termination will be provided for each transmission path provided. For digital entry switches, an equivalent termination will be provided for each transmission path provided.

6. Switched Access Service (Cont'd)

6.5 Obligations of the Telephone Company (Cont'd)

6.5.7 Design Blocking Probability

The Telephone Company will design the facilities used in the provision of Switched Access Service to meet the blocking probability criteria as set forth in (A) through (D) following.

(A) For Feature Group D, the design blocking objective will be no greater than one percent (.01) between the point of termination at the customer's designated premises and the end office switch, whether the traffic is directly routed without an alternate route or routed via an access tandem. Standard traffic engineering methods as set forth in reference document Telecommunications Transmission Engineering - Volume 3 - Networks and Services (Chapters 6-7) will be used by the Telephone Company to determine the number of transmission paths required to achieve this level of blocking.

(B) The Telephone Company will perform routine measurement functions to assure that an adequate number of transmission paths are in service. The Telephone Company will recommend that additional capacity (i.e., busy hour minutes of capacity or trunks) be ordered by the customer when additional paths are required to reduce the measured blocking to the designed blocking level. For the capacity ordered, the design blocking objective is assumed to have been met if the routine measurements show that the measured blocking does not exceed the threshold listed in the following tables.

ACCESS SERVICE

6. Switched Access Service (Cont'd)

6.5 Obligations of the Telephone Company (Cont'd)

6.5.7 Design Blocking Probability (Cont'd)

(B) (Cont'd)

(1) For transmission paths carrying only first routed traffic direct between an end office and customer's designated premises without an alternate route, and for paths carrying only overflow traffic, the measured blocking thresholds are as follows:

Number of Transmission Paths Per Trunk Group	Measured Blocking Thresholds in the Time Consistent Busy Hour for the Number of Measurements Taken Between 8:00 a.m. and 11:00 p.m. Per Trunk Group			
	15-20 Measurements	11-14 Measurements	7-10 Measurements	3-6 Measurements
2	.070	.080	.090	.140
3	.050	.060	.070	.090
4	.050	.060	.070	.080
5-6	.040	.050	.060	.070
7 or more	.030	.035	.040	.060

(2) For transmission paths carrying first routed traffic between an end office and customer's premises via an access tandem, the measured blocking thresholds are as follows:

Number of Transmission Paths Per Trunk Group	Measured Blocking Thresholds in the Time Consistent Busy Hour for the Number of Measurements Taken Between 8:00 a.m. and 11:00 p.m. Per Trunk Group			
	15-20 Measurements	11-14 Measurements	7-10 Measurements	3-6 Measurements
2	.045	.055	.060	.095
3	.035	.040	.045	.060
4	.035	.040	.045	.055
5-6	.025	.035	.040	.045
7 or more	.020	.025	.030	.040

ACCESS SERVICE

6. Switched Access Service (Cont'd)

6.6 Obligations of the Customer

In addition to the obligations of the customer set forth in 2. preceding, the customer has certain specific obligations pertaining to the use of Switched Access Service. These obligations are as follows:

6.6.1 Report Requirements

Customers are responsible for providing the following reports to the Telephone Company, when applicable.

(A) Jurisdictional Reports

When a customer orders Switched Access Service for both interstate and intrastate use, the customer is responsible for providing reports as set forth in 2.3.10 preceding. Charges will be apportioned in accordance with those reports. The method to be used for determining the interstate charges is set forth in 2.3.11 preceding.

(B) Code Screening Reports

When a customer orders service class routing, trunk access limitation or call gapping arrangements, it must report the number of trunks and/or the appropriate codes to be instituted in each end office or access tandem switch, for each of the arrangements ordered.

(C) Media Stimulated Mass Calling

When Switched Access Service is utilized to provide services for which a substantial call volume is antici pated during a short period of time (e.g., 800, 900, etc. calls placed in response to television and radio advertising), the customer shall provide notification of such an event to the Telephone Company at least 24 hours in advance of the peak period. Such notification shall be to the Telephone Company's Interexchange Carrier Service Center and shall include the nature, time, duration and frequency of the event, the estimated call volume and the telephone number(s) to be used.

ACCESS SERVICE

6. Switched Access Service (Cont'd)

6.6 Obligations of the Customer (Cont'd)

6.6.2 Supervisory Signaling

The customer's facilities shall provide the necessary on-hook, off-hook, answer and disconnect supervision.

6.6.3 Trunk Group Measurement Reports

With the agreement of the customer, trunk group data in the form of usage in CCS, peg count and overflow for its end of all access trunk groups, where technologically feasible, will be made available to the Telephone Company. These data will be used to monitor trunk group utilization and service performance and will be based on previously arranged intervals and format.

6. Switched Access Service (Cont'd)

6.7 Rate Regulations

This section contains the specific regulations governing the rates and charges that apply for Switched Access Service.

6.7.1 Description and Application of Rates and Charges

There are three types of rates and charges that apply to Switched Access Service. These are monthly recurring rates, usage rates and nonrecurring charges. These rates and charges are applied differently to the various rate elements as set forth in (D) following.

(A) Monthly Rates

Monthly rates are recurring, and apply each month or fraction thereof that a specific rate element is provided. For billing purposes, each month is considered to have 30 days.

(B) Usage Rates

Usage rates are rates that apply only when a specific rate element is used. These are applied on a per access minute basis. Access minute charges are accumulated over a monthly period.

(C) Nonrecurring Charges

Nonrecurring charges are one-time charges that apply for a specific work activity (i.e., installation or change to an existing service). The types of nonrecurring charges that apply for Switched Access Service are: installation of service, and service rearrangements.

6. Switched Access Service (Cont'd)

6.7 Rate Regulations (Cont'd)

6.7.1 Description and Application of Rates and Charges (Cont'd)

(C) Nonrecurring Charges (Cont'd)

(1) Installation of Service

Nonrecurring charges apply to each Switched Access Service installed. For FGD, when ordered on a per trunk basis, the charge is applied on a per trunk basis. For FGD, when ordered on a busy hour minutes of capacity basis, the charge is also applied on a per trunk basis but the charge applies only when the capacity ordered requires the installation of an additional trunk(s).

ACCESS SERVICE

6. Switched Access Service (Cont'd)

6.7 Rate Regulations (Cont'd)

6.7.1 Description and Application of Rates and Charges (Cont'd)

(C) Nonrecurring Charges (Cont'd)

(2) Service Rearrangements

Administrative changes will be made without charge(s) to the customer. Administrative changes are as follows:

- Change of customer name,
- Change of customer or customer's end user premises address when the change of address is not a result of a physical relocation of equipment,
- Change in billing date (name, address, or contact name or telephone number),
- Change of agency authorization,
- Change of customer circuit identification,
- Change of billing account number,
- Change of customer test line number,
- Change of customer or customer's end user contact name or telephone number, and
- Change of jurisdiction

Changes to the point in time when the off-hook supervisory signal is provided in the originating call sequence i.e., when the off-hook supervisory signal is changed from being provided by the customer's equipment before the called party answers to being forwarded by the customer's equipment when the called party answers or vice versa, are subject to the nonrecurring charge as set forth in 5.2.2(A) preceding.

ACCESS SERVICE

6. Switched Access Service (Cont'd)

6.7 Rate Regulations (Cont'd)

6.7.1 Description and Application of Rates and Charges (Cont'd)

(C) Nonrecurring Charges (Cont'd)

(2) Service Rearrangements (Cont'd)

For additions, changes or modifications to an optional feature which has a separate nonrecurring charge, that nonrecurring charge will apply.

For additions of or modifications to optional features that do not have their own separate nonrecurring charges, the nonrecurring charge as set forth in (1) preceding will apply. When an optional feature is not required on each transmission path, but rather for an entire transmission path group, an end office or an access tandem switch, only one such charge will apply (i.e., it will not apply per transmission path).

ACCESS SERVICE

6. Switched Access Service (Cont'd)

6.7 Rate Regulations (Cont'd)

6.7.1 Description and Application of Rates and Charges (Cont'd)

(D) Application of Rates

Rates are applied either as premium rates or transitional rates.

The following rules provide the basis for applying the rates and charges:

(1) Premium rates to all access minutes that originate or terminate at end offices equipped with equal access (i.e., FGD) capabilities.

6. Switched Access Service (Cont'd)

6.7 Rate Regulations (Cont'd)

6.7.1 Description and Application of Rates and Charges (Cont'd)

(D) Application of Rates (Cont'd)

(1) (Cont'd)

(a) All access minutes that originate from or terminate at the equal access end office(s) will be billed at premium rates.

(i) Premium access minutes will be determined as set forth in (b) following.

(b) The number of access minutes to be rated as premium access minutes is determined as follows:

(i) Where end office specific usage data is available, premium rates apply to the measured access minutes originating from or terminating at the equal access end office(s).

6. Switched Access Service (Cont'd)

6.7 Rate Regulations (Cont'd)

6.7.1 Description and Application of Rates and Charges (Cont'd)

(D) Application of Rates (Cont'd)

(1) (Cont'd)

(b) (Cont'd)

(ii) Where FGD Switched Access Service is provided to a customer in an end office(s) where that customer's premium access minutes have been determined in accordance with (ii) and (iii) preceding, such premium access minutes will be adjusted in the following manner. For each FGD access minute originating and/or terminating from that end office, the premium access minutes as set forth in (ii) and (iii) preceding will be reduced on a one for one basis, but in no event shall the reduction exceed the total number of premium access minutes as set forth in (ii) and (iii) from that end office. The customer will be billed for the revised number of premium access minutes.

ACCESS SERVICE

6. Switched Access Service (Cont'd)

6.7 Rate Regulations (Cont'd)

6.7.1 Description and Application of Rates and Charges (Cont'd)

(D) Application of Rates (Cont'd)

(2) Common Channel Signaling/Signaling System 7 (CCS/SS7) Network Connection

The CCS/SS7 Network Connection is comprised of a Signaling Mileage Facility charge, a Signaling Mileage Termination charge, a Signaling Entrance Facility charge, and a Signaling Transfer Point (STP) Port charge.

The Signaling Mileage Facility charge is assessed on a per facility per mile basis. The Signaling Mileage Termination charge is assessed on a per termination basis (i.e., at each end of the Signaling Mileage Facility). When the Signaling Mileage Facility mileage measurement is zero, Signaling Mileage Termination charges do not apply.

The Signaling Entrance Facility charge is assessed on a per facility basis for the connection between the customer's designated premises (Signaling Point of Interface) and the serving wire center of that premises. This charge will apply even if the customer designated premises and the serving wire center are co-located in a Telephone Company building.

The STP Port charge is assessed on a per port basis for each termination of a Signaling Network Access Link at an STP.

ACCESS SERVICE

6. Switched Access Service (Cont'd)

6.7 Rate Regulations (Cont'd)

6.7.1 Description and Application of Rates and Charges (Cont'd)

(D) Application of Rates (Cont'd)

(3) CIC and OZZ Signaling Information (COSI)

The rates applicable to CIC and OZZ Signaling Information are nonrecurring charges based on the signaling method selected (MF or CCS/SS7). The rates are applied only to the customer of record's initial order for COSI.

6. Switched Access Service (Cont'd)

6.7 Rate Regulations (Cont'd)

6.7.2 Moves

A move involves a change in the physical location of one of the following:

- The point of termination at the customer's premises
- The customer's premises

ACCESS SERVICE

6. Switched Access Service (Cont'd)

6.7 Rate Regulations (Cont'd)

6.7.2 Moves (Cont'd)

The charges for the move are dependent on whether the move is to a new location within the same building or to a different building.

(A) Moves Within the Same Building

When the move is to a new location within the same building, the charge for the move will be an amount equal to one half of the nonrecurring charge for the capacity affected. There will be no change in the minimum period requirements.

(B) Moves to a Different Building

Moves to a different building will be treated as a discontinuance and start of service and all associated nonrecurring charges will apply. New minimum period requirements will be established for the new service. The customer will also remain responsible for satisfying all outstanding minimum period charges for the discontinued service.

6.7.3 Measuring Access Minutes

Customer traffic to end offices will be measured (i.e., recorded or assumed) by the Telephone Company at end office switches or access tandem switches. Originating and terminating calls will be measured (i.e., recorded or assumed) by the Telephone Company to determine the basis for computing chargeable access minutes. If customer message detail is not available because the Telephone Company lost or damaged tapes or incurred recording system outages, the Telephone Company will estimate the volume of lost customer messages and associated revenue based on previously known values.

ACCESS SERVICE

6. Switched Access Service (Cont'd)

6.7 Rate Regulations (Cont'd)

6.7.3 Measuring Access Minutes (Cont'd)

(A) Feature Group D Usage Measurement

For originating calls over FGD provided with Multi-Frequency Signaling, usage measurement begins when the originating FGD entry switch receives the first wink supervisory signal forwarded from the customer's point of termination.

For originating calls over FGD provided with Signaling System 7 (SS7) Signaling when the FGD end office is not routed through an access tandem for connection to the customer, usage measurement begins when the SS7 Initial Address Message is sent from the Service Switching Point (SSP) to the Service Transfer Point (STP).

For originating calls over FGD provided with Signaling System 7 (SS7) signaling when the FGD end office is routed through a tandem for connection to the customer, usage measurement begins when the FGD end office receives the SS7 Exit Message from the tandem.

The measurement of originating call usage over FGD provided with Multi-Frequency Signaling ends when the originating FGD entry switch receives disconnect supervision from either the originating end user's end office, indicating the originating end user has disconnected, or the customer's point of termination, whichever is recognized first by the entry switch.

The measurement of originating call usage over FGD provided with SS7 Signaling ends when the originating FGD end office receives an SS7 Release Message indicating either the originating or terminating end user has disconnected.

ACCESS SERVICE

6. Switched Access Service (Cont'd)

6.7 Rate Regulations (Cont'd)

6.7.3 Measuring Access Minutes (Cont'd)

(A) Feature Group D Usage Measurement (Cont'd)

For terminating calls over FGD provided with Multi-Frequency Signaling, the measurement of access minutes begins when the terminating FGD entry switch receives answer supervision from the terminating end user's end office, indicating the terminating end user has answered.

The measurement of terminating call usage over FGD ends when the terminating FGD entry switch receives disconnect supervision from either the terminating end user's end office, indicating the terminating end user has disconnected, or the customer's point of termination,
whichever is recognized first by the entry switch.

For terminating calls over FGD with SS7 signaling, usage measurement begins when the terminating recording switch receives answer supervision from the terminating end user. The Telephone Company switch receives answer supervision and sends the indication to the customer in the form of an answer message. The measurement of terminating FGD call usage ends when the entry switch receives or sends a release message, whichever occurs first.

ACCESS SERVICE

6. Switched Access Service (Cont'd)

6.7 Rate Regulations (Cont'd)

6.7.4 Network Blocking Charge for Feature Group D

The customer will be notified by the Telephone Company to increase its capacity (busy hour minutes of capacity or quantities of trunks) when excessive trunk group blocking occurs on groups carrying Feature Group D traffic and the measured access minutes for that hour exceed the capacity purchased. Excessive trunk group blocking occurs when the blocking thresholds stated below are exceeded. They are predicated on time consistent, hourly measurements over a 30 day period excluding Saturdays, Sundays and national holidays. If the order for additional capacity has not been received by the Telephone Company within 15 days of the notification, the Telephone Company will bill the customer, at the rate set forth in 6.8.1(C) following, for each overflow in excess of the blocking threshold when (1) the average "30 day period" overflow exceeds the threshold level for any particular hour and (2) the "30 day period" measured average originating or two-way usage for the same clock hour exceeds the capacity purchased.

Blocking Thresholds

Trunks in Service	1%	1/2%
1-2	.070	.045
3-4	.050	.035
5-6	.040	.025
7 or greater	.030	.020

The 1% blocking threshold is for transmission paths carrying traffic direct (without an alternate route) between an end office and a customer's premises. The ½% blocking threshold is for transmission paths carrying first routed traffic between an end office and a customer's premises via an access tandem.

ACCESS SERVICE

6. Switched Access Service (Cont'd)

6.7 Rate Regulations (Cont'd)

6.7.5 Local Information Delivery Services

Calls over Switched Access in the terminating direction to certain community information services will be rated under the applicable rates for Switched Access Service as set forth in 6.8 following. In addition, the charges per call as specified under the Telephone Company's local and/or general exchange service tariffs, e.g., 976 (DIAL-IT) Network Services, will also apply.

6. Switched Access Service (Cont'd)

6.7 Rate Regulations (Cont'd)

6.7.6 Mileage Measurement

The mileage to be used to determine the monthly rate for Local Transport is calculated on the airline distance between the end office switch, which may be a remote switching module, (where the call carried by Local Transport originates or terminates) and the customer's serving wire center. When Tandem-Switched Transport or Direct-Trunked Transport is ordered between the serving wire center and the end office, mileage is normally measured in one segment from the serving wire center to the end office. When Direct-Trunked Transport is ordered between a serving wire center and a tandem and Tandem-Switched Transport is ordered between the tandem and the end office, mileage is calculated separately for each segment. Exceptions to these methods are as set forth in (A) through (G) following. For SS7 signaling, the mileage to be used to determine the monthly rate for the Signaling Mileage Facility is calculated on the airline distance between the serving wire center associated with the customer's designated premises (Signaling Point of Interface) and the Telephone Company wire center providing the STP Port. Where applicable, the V&H coordinates method, is used to determine mileage. This method is set forth in the NATIONAL EXCHANGE CARRIER ASSOCIATION TARIFF F.C.C. NO. 4 for Wire Center Information (V&H coordinates).

Mileage rates are set forth in 6.8.1 following. To determine the rate to be billed, first compute the mileage using the V&H coordinates method. If the calculation results in a fraction of a mile, always round up to the next whole mile before determining the mileage and applying the rates. Then multiply the mileage by the appropriate rate.

Exceptions to the mileage measurement rules are as follows:

6. Switched Access Service (Cont'd)

6.7 Rate Regulations (Cont'd)

6.7.6 Mileage Measurement (Cont'd)

(A) When the Alternate Traffic Routing optional feature is provided with Feature Group D, the Local Transport access minutes will be apportioned between the two trunk groups used to provide this feature. Such apportionment will be made using: (1) actual minutes of use, if available, (2) standard Telephone Company traffic engineering methodology and will be based on the last trunk CCS desired for the high usage group, as described in 6.3.1(N) preceding, and the total busy hour minutes of capacity ordered to the end office, when the feature is provided at an end office switch, or to the subtending end offices when the feature is provided at an access tandem switch, or (3) until July 1, 1994, a temporary percent direct-routed (PDR) provided by the customer and mutually agreed to by the Telephone Company for end offices that lack capability to measure overflow. This apportionment will serve as the basis for Local Transport calculation.

6. Switched Access Service (Cont'd)

6.7 Rate Regulations (Cont'd)

6.7.6 Mileage Measurement (Cont'd)

(B) The Local Transport mileage for Feature Group D Switched Access Service provided to a remote office will be measured in multiple segments. When the facility is directly trunked to the host office, Direct-Trunked Facility mileage will be measured between the customer's serving wire center and the host office, and Tandem-Switched Facility mileage will be measured between the host office and the remote office. The Tandem Switching Charge will not apply.

When the facility is directly trunked to a tandem, Direct-Trunked Facility will be measured from the serving wire center to the tandem, Tandem-Switched Facility will be measured from the tandem to the host, and another segment of Tandem-Switched Facility will be measured from the host to the remote. A Tandem Switching Charge will be applicable at the tandem.

6. Switched Access Service (Cont'd)

6.7 Rate Regulations (Cont'd)

6.7.6 Mileage Measurement (Cont'd)

(B) (Cont'd)

When service to the remote is ordered as only Tandem-Switched Facility, mileage will be separately measured between the serving wire center and the host and between the host and the end office. The Tandem Switching Charge will be applicable at the tandem.

(C) When multiplexing is performed at Telephone Company hubs, mileage is computed and rates applied separately for each segment of the Local Transport Direct-Trunked Facility (i.e., customer serving wire center to hub, hub to hub, and/or hub to end office).

6.7.7 Shared Use

Shared use occurs when Switched Access Service and Special Access Service are provided over the same High Capacity service through a common interface. The regulations governing the provision of Shared Use Facilities are set forth in 7.2.7 following.

ACCESS SERVICE

6. Switched Access Service (Cont'd)

6.8 Rates and Charges

6.8.1 Local Transport

(A) Rates

(1) Residual Interconnection Charge (RIC)

	Rate
(a) Residual Interconnection Charge Per Access Minute	
- Premium	$ .0000
- Transitional (Non-Premium)	.0000
(b) CAP Residual Interconnection Charge Per Access Minute	
- Premium	$ .0000
- Transitional (Non-Premium)	.0000

(2) Access Tandem Direct Trunk Port

Voice Grade	$ 1.25
High Capacity DS-1 Per Trunk Port	$29.90

ACCESS SERVICE

6. Switched Access Service (Cont'd)

6.8 Rates and Charges (Cont'd)

6.8.1 Local Transport (Cont'd)

(A) Rates (Cont'd)

(3)

	USOC	Rate	
(a) Entrance Facility Per Termination - High Capacity DS1	TMECS	$122.32	
(b) Direct-Trunked Transport Facility Per Mile - High Capacity DS1	CMFT1	$ 12.14	
Termination Per Termination - High Capacity DS1	CMTT1	$146.76	
(c) Multiplexing Per Arrangement - DS1 to Voice	MQ1	$353.03	
(d) Tandem-Switched Transport Facility Per Access Minute Per Mile		$0.000048	(N)
Termination Per Access Minute Per Facility Segment		$0.000180	(N)
Tandem Switching Charge Per Access Minute Per Tandem		$0.002545	(N)
Tandem Switch Multiplexing Charge Per Access Minute Per Facility Segment		$0.000036	(N)

ACCESS SERVICE

6. Switched Access Service (Cont'd)

6.8 Rates and Charges (Cont'd)

6.8.1 Local Transport (Cont'd)

(A) Rates (Cont'd)

(3)

	USOC	Nonrecurring Charge
(e) Installation		
- Per Line or Trunk		
- High Capacity DS1	TMECS	$870.46
Inside Move		
- Per Line or Trunk		
- Voice Grade		$107.43
- High Capacity DS1	TMECS	$435.23

ACCESS SERVICE

6. Switched Access Service (Cont'd)

6.8 Rates and Charges (Cont'd)

6.8.1 Local Transport (Cont'd)

(B) High Capacity DS3

(1) Density Pricing Zone 1

	USOC	Rate
(a) Entrance Facility Per Termination		
- Electrical Interface	EF2XX	$1,446.41
- Optical Interface	EF20X	$1,474.65
(b) Direct-Trunked Transport Facility Per Mile	CMFT3	$ 121.04
Termination Per Termination	CMTT3	$ 528.54
(c) Multiplexing DS3 to DS1 Per Arrangement	MKW3X	$ 293.52

	USOC	Nonrecurring Charge
(d) Installation		
- Per Line or Trunk		
- Electrical Interface	EF2XX	$ 423.86
- Optical Interface	EF20X	$ 423.86
(e) Inside Move		
- Per Line or Trunk		
- Electrical Interface	EF2XX	$ 211.93
- Optical Interface	EF20X	$ 211.93

ACCESS SERVICE

6. Switched Access Service (Cont'd)

6.8 Rates and Charges

6.8.1 Local Transport

(C) Common Channel Signaling Network Connection

(1) Signaling Network Access Link

	USOC	Monthly Rate	Nonrecurring Charge
- Signaling Mileage Facility per mile	CMF	$ 1.70	
- Signaling Mileage Termination per termination	CMT	$ 13.00	
- Signaling Entrance Facility per STP Facility	CCA	$ 56.50	$225.28

(2) STP Port

- per port	PT8SX	$759.42	

ACCESS SERVICE

6. Switched Access Service (Cont'd)

6.8 Rates and Charges (Cont'd)

6.8.1 Local Transport (Cont'd)

(D) Chargeable Optional Features

(1) CIC and OZZ Signaling Information (COSI)

	USOC	Nonrecurring Charge
CCS/SS7 Signaling + (requires STP interconnection) - per customer's initial order	XSSS7	$ 1,914.31

	Rate Per Call Blocked
(2) Network Blocking Charge +	$0.011946

(3) Clear Channel Capability (CCC)

	USOC	Monthly Rate	Nonrecurring Charge
Clear Channel Capability - Per 1.544 Mbps Transmission Path	CLR	None	$102.93

(E) Nonchargeable Optional Features

(1) Supervisory Signaling

		FID
DX Supervisory Signaling arrangement - Per Transmission Path*	NCI	++DX+
SF Supervisory Signaling arrangement - Per Transmission Path**	NCI	++SF+
E&M Type 1 Supervisory Signaling arrangement - Per Transmission Path*	NCI	++EA+
E&M Type II Supervisory Signaling arrangement - Per Transmission Path*	NCI	++EB+

\+ Applies to FGD
* Available with Interface Groups 1 and 2
** Available with Interface Groups 2 and 6 through 10

ACCESS SERVICE

6. Switched Access Service (Cont'd)

6.8 Rates and Charges (Cont'd)

6.8.1 Local Transport (Cont'd)

(E) Nonchargeable Optional Features (Cont'd) FID

(1) Supervisory Signaling (Cont'd)

E&M Type III Supervisory Signaling - Per Transmission Path*	NCI	++EC+
Tandem Supervisory Signaling - Per Transmission Path	NCI	++EX+

(2) Customer specification of the receive transmission level at the first point of switching within a range acceptable to the Telephone Company - Per Transmission Path TLV

(3) Customer specification of Local Transport Termination Four-wire termination in lieu of two-wire termination - Per Transmission Path LT1++

* Available with Interface Groups 1 and 2 for FGD.

ACCESS SERVICE

6. Switched Access Service (Cont'd)

6.8 Rates and Charges (Cont'd)

6.8.2 End Office

(A) Switching

Premium	Rates Per Access Minute	
LS2 - Feature Group D	$ 0.001974	(R)

(B) Directory Assistance Information Surcharge

	Premium
- per 100 Access Minutes	$0.000000

(C) End Office Direct Trunk Port

	USOC	Rate
- Voice Grade	XXXX	$ 1.25
- High Capacity DS-1	XXXX	$ 29.90

(D) End Office Common Trunk Port

- High Capacity DS-1	XXXX	$.000171

6.8.3 500 and 900 NXX Access Service Translation Optional Feature

	USOC	Nonrecurring Charge Per Order
(A) Per 900 NXX translation for initial or subsequent order to add or change NXX translation codes.	90FT	$114.60
(B) Per 500 NXX translation for initial or subsequent order to add or change NXX translation codes	50FT	$145.83

ACCESS SERVICE

6. Switched Access Service (Cont'd)

6.8 Rates and Charges (Cont'd)

6.8.4 8XX Data Base Access Service

	Rate per Completed Data Base Query
Carrier Selection	$.00883738
Vertical Service Features (charge is in addition to Carrier Selection)	
- POTS Translation Charge	$.000000
- Other Vertical Service Features (charge is in addition to POTS Translation Charge if applicable)	$.00020881

6.8.5 Billing Name and Address

	Rate per Telephone Number Listing Requested
BNA - $15 per month minimum charge	$.71302048

6.8.6 Operator Transfer Service

	Rate
Per Call Transferred	$.46448191

6.8.7 Marketing Expense

- Originating Per Access Minute	$0.000
- Terminating Per Access Minute	$0.000

ACCESS SERVICE

6. Switched Access Service (Cont'd)

6.8 Rates and Charges (Cont'd)

6.8.2 End Office (Cont'd)

(A) Switching (Cont'd)

(1) Local Switching (Cont'd)

(a) Common Switching Nonchargeable Optional Features	FID
Automatic Number Identification (available with FGD) - Per Transmission Path Group	ANI

ACCESS SERVICE

6. Switched Access Service (Cont'd)

6.8 Rates and Charges (Cont'd)

6.8.2 End Office (Cont'd)

(A) Switching (Cont'd)

(1) Local Switching (Cont'd)

(a) Common Switching Nonchargeable Optional Features (Cont'd) — FID

Service Class Routing (available with FGD) - Per Transmission Path Group — SCRT

Alternate Traffic Routing (available with FGD) - Per Transmission Path Group — ARTG

ACCESS SERVICE

6. Switched Access Service (Cont'd)

6.8 Rates and Charges (Cont'd)

6.8.2 End Office (Cont'd)

(A) Switching (Cont'd)

(1) Local Switching (Cont'd)

(a) Common Switching Nonchargeable Optional Features (Cont'd)

	FID
Trunk Access Limitation Arrangement (available with FGD) - Per End Office	CHOK
Call Gapping Arrangement (available with FGD) - Per End Office	CGAP
International Carrier Option (available with FGD) - Per End Office and Access Tandem	INCO
Band Advance Arrangement for Use with Special Access Service utilized in the provision of WATS or WATS-type Services (available with Feature Group D) - Per Arrangement	BAAD

ACCESS SERVICE

6. Switched Access Service (Cont'd)

6.8 Rates and Charges (Cont'd)

6.8.2 End Office (Cont'd)

(A) Switching (Cont'd)

(1) Local Switching (Cont'd)

(a) Common Switching Nonchargeable Optional Features (Cont'd)

	FID
End Office End User Line Service Screening for Use with WATS Access Lines - Per Transmission Path	BAND
Hunt Group Arrangement for Use with Special Access Service utilized in the provision of WATS or WATS-type Services - Per Transmission Path Group	HML/HTG
Uniform Call Distribution Arrangement for Use with Special Access Service utilized in the provision of WATS or WATS-type Services - Per Transmission Path Group	HTY UD
Nonhunting Number for Use with Hunt Group Arrangement or Uniform Call Distribution Arrangement for Use with Special Access Service utilized in the provision of WATS or WATS-type Services - Per Transmission Path	NHN

ACCESS SERVICE

6. Switched Access Service (Cont'd)

6.8 Rates and Charges (Cont'd)

6.8.2 End Office (Cont'd)

(A) Switching (Cont'd)

(1) Local Switching (Cont'd)

(b) Transport Termination Nonchargeable Optional Features

	FID	
(i) Trunk Side Terminations		
Standard Trunk for Originating, Terminating or Two-Way Operation	TTC	SO
	TTC	ST
	TTC	TY
Operator Trunk, Full Feature Arrangement (available with FGD)	TTC	FF

ACCESS SERVICE

6. Switched Access Service (Cont'd)

6.8 Rates and Charges (Cont'd)

6.8.2 End Office (Cont'd)

(A) Switching (Cont'd)

(2) Line Terminations

(a) Trunk Side Terminations Nonchargeable

Optional Features		FID
Terminating Trunk Side Connection for Forwarding of Dialed Number Identification to End User - Per Transmission Path	NC	+++T

ACCESS SERVICE

6. Switched Access Service (Cont'd)

6.8 Rates and Charges (Cont'd)

6.8.2 End Office (Cont'd)

(B) Directory Assistance Information Surcharge

	Premium	Transitional
- per 100 Access Minutes	$0.000000	$0.000000

6.8.3 8XX Data Base Access Service

	Rate per Completed Data Base Query
Carrier Selection	$.00867600
Vertical Service Features (charge is in addition to Carrier Selection)	
- POTS Translation Charge	$.000000
- Other Vertical Service Features (charge is in addition to POTS Translation Charge if applicable)	$.00020500

ACCESS SERVICE

6. Switched Access Service (Cont'd)

6.8 Rates and Charges (Cont'd)

6.8.4 Billing Name and Address

	Rate per Telephone Number Listing Requested
BNA - $15 per month minimum charge	$0.70

6.8.5 Operator Transfer Service

	Rate
Per Call Transferred	$0.456

ACCESS SERVICE

7. Special Access Service

7.1 General

Special Access Service provides a transmission path to connect customer designated premises*, directly, through a Telephone Company hub or hubs where bridging or multiplexing functions are performed, or to connect a customer designated premises and a WATS Serving Office. Special Access Service includes all exchange access not utilizing Telephone Company end office switches.

The connections provided by Special Access Service are digital. Digital connections are differentiated by bit rate.

7.1.1 Channel Types

There are seven types of channels used to provide Special Access Services. Each type has its own characteristics. All are subdivided by one or more of the following:

- Transmission specifications,
- Speed (i.e., bit rate),

Customers can order a basic channel and select from a list of available transmission parameters and channel interfaces those that they desire to meet specific communications requirements.

For purposes of ordering channels, each has been identified as a type of Special Access Service. However, such identification is not intended to limit a customer's use of the channel nor to imply that the channel is limited to a particular use.

* Telephone Company Centrex CO and CO-like switches are considered to be a customer designated premises for purposes of this tariff.

ACCESS SERVICE

7. Special Access Service

7.1 General (Cont'd)

7.1.1 Channel Types (Cont'd)

Following is a brief description of each type of channel:

Digital Data - a channel for the digital transmission of synchronous serial data at rates of 2.4, 4.8, 9.6, 19.2, 56.0 or 64.0 kbps.

High Capacity - a channel for the transmission of isochronous serial digital data at rates of 1.544 or 44.736 Mbps.

ACCESS SERVICE

7. Special Access Service (Cont'd)

7.1 General (Cont'd)

7.1.1 Channel Types (Cont'd)

Detailed descriptions of each of the channel types are provided in 7.4 and 7.5 following.

The customer also has the option of ordering High Capacity facilities (i.e., 1.544 Mbps and 44.736 Mbps) to Telephone Company hubs for multiplexing to individual channels of a lower capacity or bandwidth. Descriptions of the types of multiplexing available at the hubs, as well as the number of individual channels which may be derived from each type of facility are set forth in 7.5 following. Additionally, the customer may specify optional features for the individual channels derived from the facility to further tailor the channel to meet specific communications requirements. Descriptions of the optional features and functions available are set forth in 7.2.1 (C) following.

For example, a customer may order a 44.736 Mbps High Capacity channel from a customer designated premises to a Telephone Company hub for multiplexing to twenty-eight (28) 1.544 Mbps channels. The 1.544 Mbps channels may be further multiplexed at the same or a different hub to Voice Grade channels or may be extended to other customer designated premises or hubs. Optional features may be added to either the 1.544 Mbps or the Voice Grade channels.

ACCESS SERVICE

7. Special Access Service (Cont'd)

7.1 General (Cont'd)

7.1.2 Service Descriptions

For the purposes of ordering, there are two categories of Special Access Service. These are:

Digital Data (DA)
High Capacity (HC)

Each service consists of a basic channel to which a technical specifications package (customized or predefined), channel interface(s) and, when desired, optional features and functions are added to construct the service desired by the customer. Technical specifications packages and optional features and functions are described in this section. Channel interfaces are described in 10.3 following.

Customized technical specifications packages will be provided where technically feasible. If the Telephone Company determines that the requested parameter specifications are not compatible, the customer will be advised and given the opportunity to change the order.

When a customized channel is ordered the customer will be notified whether Additional Engineering Charges apply. In such cases, the customer will be given an estimate of the hours to be billed before any further action is taken on the order.

The channel description specifies the characteristics of the basic channel and indicates whether the channel is provided between customer designated premises, between a customer designated premises and a Telephone Company hub where bridging or multiplexing functions are performed between hubs, or between a customer designated premises and a WATS Serving Office.

ACCESS SERVICE

7. Special Access Service (Cont'd)

7.1 General (Cont'd)

7.1.2 Service Descriptions Cont'd

(A) Information pertaining to the technical specifications packages indicates the transmission parameters that are available with each package. This information is displayed in a matrix with the transmission parameters listed down the left side and the packages listed across the top. Each package is identified by a code, e.g., HC. The first two letters of the code indicate the category of Special Access Service to which the parameters are applicable. These two letter codes are shown above in parentheses following the category of Special Access Service. The letter "C" following the two letter code indicates the technical specifications package for a customized service. A numeric or alpha-numeric designation following the two letter code indicates the specific predefined package. For a customized service, the customer may select any parameters available with that category of service as long as the parameters are compatible. When appropriate, the Technical Reference which contains detailed specifications for the parameters is shown following the matrix.

(B) Channel interfaces at each Point of Termination on a two-point service may be symetrical or asymetrical. On a multipoint service they may also by symetrical or asymetrical, but communications can only be provided between compatible interfaces. Only certain channel interfaces are compatible. These are set forth in 10.3 following, in a combination format.

(C) Only certain channel interface combinations are available with the predefined technical specifications packages. These are delineated in the Technical References set forth in (F) following. When a customized channel is requested, all channel interface combinations available with the specified type of service are available with the customized channel.

ACCESS SERVICE

7. Special Access Service (Cont'd)

7.1 General (Cont'd)

7.1.2 Service Descriptions (Cont'd)

(D) The optional features and functions available with each type of Special Access Service are described in this section. The optional features and functions information also indicates with which technical specifications packages they are available. Such information is displayed in a matrix with the optional feature or function listed down the left side and the technical specifications package listed across the top.

(E) The Telephone Company will maintain existing transmission specifications on services installed prior to the effective date of this tariff, except that existing services with performance specifications exceeding the standards listed in this provision will be maintained at the performance levels specified in this tariff.

(F) All services installed after the effective date of this tariff will conform to the transmission specification standards contained in this tariff or in the following Technical References for each category of service:

Digital Data	TR-NPL-000341, Bellcore PUB 62310 AT&T PUB 62310, INC Bulletin CB-INC-100
High Capacity	PUB 62411 TR-NPL-000342

7.1.3 Service Configurations

There are two types of service configurations over which Special Access Services are provided: two-point service and multipoint service.

ACCESS SERVICE

7. Special Access Service (Cont'd)

7.1 General (Cont'd)

7.1.3 Service Configurations (Cont'd)

(A) Two-Point Service

A two-point service connects two customer designated premises, either on a directly connected basis or through a hub where multiplexing functions are performed.

Applicable rate elements are:

- Channel Terminations
- Channel Mileage (as applicable)
- Optional Features and Functions (when applicable)

A Special Access Surcharge, as set forth in 7.3 following and a Message Station Equipment Recovery Charge, as set forth in 7.4 following, may be applicable.

The following diagram depicts a two-point High Capacity service connecting two customer designated premises (CDP) located 15 miles apart. The service is provided with C-Type conditioning.

CDP - Customer Designated Premises
CSWC - Customer Serving Wire Center

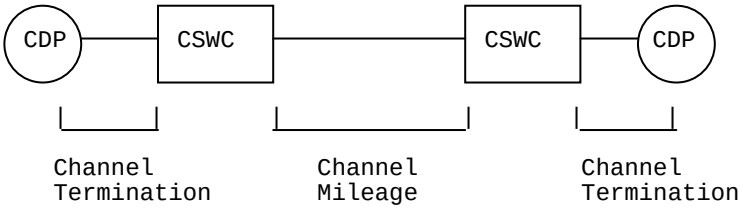

Applicable rate elements are:

- Channel Terminations (applicable one (1) per CDP)
- Channel Mileage (1 section, Channel Mileage Facility per mile plus 2 Channel Mileage Terminations)
- C-Type Conditioning Optional Feature

7. Special Access Service (Cont'd)

7.1 General (Cont'd)

7.1.3 Service Configurations (Cont'd)

(A) Two-Point Service (Cont'd)

If one of the Customer Designated Premises is an Expanded Interconnection Location:

- One Channel Termination and one Cross-connect are applicable rate elements.

ACCESS SERVICE

7. Special Access Service (Cont'd)

7.1 General (Cont'd)

7.1.3 Service Configurations (Cont'd)

(B) Multipoint Service

Multipoint service connects three or more customer designated premises through one or more Telephone Company hubs. Only certain types of Special Access Service are provided as multipoint service. These are so designated in the descriptions for the appropriate channel.

The channel between hubs (i.e., bridging locations) on a multipoint service is a mid-link. There is no limita tion on the number of mid-links available with a multi point service. However, when more than three mid-links in tandem are provided the quality of the overall service may be degraded.

Multipoint service utilizing a customized technical specifications package, as set forth in 7.1.2 preceding, will be provided when technically possible. If the Telephone Company determines that the requested characteristics for a multipoint service are not compatible, the customer will be advised and given the opportunity to change the order.

When ordering, the customer will specify the desired bridging hub(s). EXCHANGE CARRIER ASSOCIATION TARIFF F.C.C. NO. 4 identifies serving wire centers, hub locations and the type of bridging functions available.

Applicable Rate Elements are:

- Channel Terminations (one per customer designated premises)
- Channel Mileage (as applicable between the serving wire center for each customer designated premises and the hub and between hubs).
- Bridging
- Additional Optional Features and Functions (when applicable)

ACCESS SERVICE

7. Special Access Service (Cont'd)

7.1 General (Cont'd)

7.1.3 Service Configurations (Cont'd)

(B) Multipoint Service (Cont'd)

The Special Access Surcharge, as set forth in 7.3 following, and a Message Station Equipment Recovery Charge, as set forth in 7.4 following, may be applicable.

Example: High Capacity multipoint service connecting four customer designated premises (CDP) via two customer specified bridging hubs.

CDP - Customer Designated Premises
HSWC - Hub Serving Wire Center
CSWC - Customer Serving Wire Center

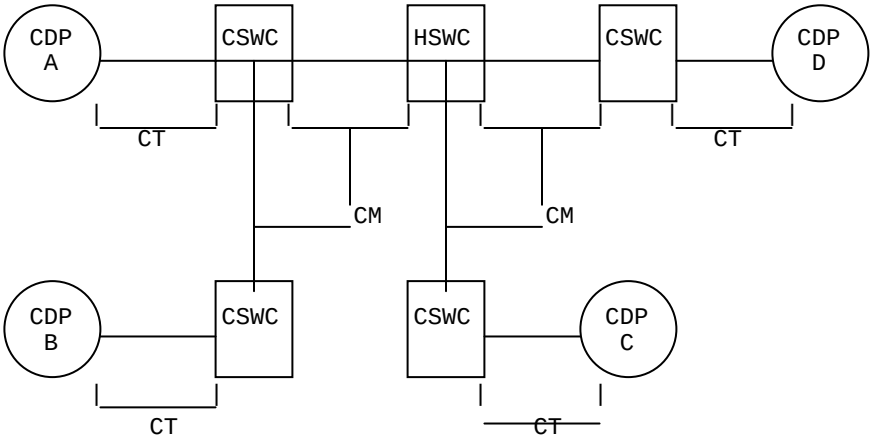

Applicable rate elements are:

- Channel Terminations (4 applicable)
- Channel Mileage (4 sections, Channel Mileage Facility per mile plus 2 Channel Mileage Terminations per section)
- Bridging Optional Feature (6 applicable, i.e., each bridge port)

ACCESS SERVICE

7. Special Access Service (Cont'd)

7.1 General (Cont'd)

7.1.4 Alternate Use

Alternate Use occurs when a service is arranged by the Telephone Company so that the customer can select different types of transmission at different times. A customer may use a service in any privately beneficial manner. However, where technical or engineering changes are required to effectuate an alternate use, the Telephone Company will make such special arrangements available on an individual case basis.

The arrangement required to transfer the service from one operation to the other (i.e., the transfer relay and control leads) will be rated and provided on an individual case basis, Specialized Service or Arrangements. The customer will pay the stated tariff rates for the Access Service rate elements for the service ordered (i.e., Channel Terminations, Channel Mileage (as applicable) and Optional Features and Functions (if any).

7.1.5 Special Facilities Routing

A customer may request that the facilities used to provide Special Access Service be specially routed. The regulations, rates and charges for Special Facilities Routing (i.e., Avoidance, Diversity and Cable-Only) are set forth in 11. following.

7.1.6 Design Layout Report

At the request of the customer, the Telephone Company will provide to the customer the make-up of the facilities and services provided under this tariff as Special Access Service to aid the customer in designing its overall service. This information will be provided in the form of a Design Layout Report. The Design Layout Report will be provided to the customer at no charge, and will be reissued or updated whenever these facilities are materially changed.

ACCESS SERVICE

7. Special Access Service (Cont'd)

7.1 General (Cont'd)

7.1.7 Acceptance Testing

At no additional charge, the Telephone Company will, at the customer's request, cooperatively test at the time of installation, the following parameters:

(A) For digital services (i.e., Digital Data and High Capacity) service, acceptance tests will include tests for the parameters applicable to the service as specified by the customer in the order for service.

7.1.8 Ordering Options and Conditions

Special Access Service is ordered under the Access Order provisions set forth in 5. preceding. Also included in that section are other charges which may be associated with ordering Special Access Service (e.g., Service Date Change Charges, Cancellation Charges, etc.).

7. Special Access Service (Cont'd)

7.2 Rate Regulations

This section contains the specific regulations governing the rates and charges that apply for Special Access.

7.2.1 Rate Categories

There are three basic rate categories which apply to Special Access Service:

- Channel Terminations (described in 7.2.1(A) following)
- Channel Mileage (described in 7.2.1(B) following)
- Optional Features and functions (described in 7.2.1(C) following)

(A) Channel Termination

The Channel Termination rate category provides for the communications path to each customer designated premise. Included as part of the Channel Termination is a standard channel interface arrangement which defines the technical characteristics associated with the type of facilities to which the access service is to be connected at the Point of Termination (POT) and the type of signaling capability, if any. The signaling capability itself is provided as an optional feature as set forth in (C) following. One Channel Termination charge applies per customer designated premises at which the channel is terminated. This charge will apply even if the customer designated premises and the serving wire center are co-located in a Telephone Company building.

For DS3 High Capacity Service, the Channel Termination rates are made up of the DS3 Capacity Interface rate and the DS3 Channel Installed rate. The Capacity Interface rate is dependent upon the capacity ordered (i.e., Capacity Interface of 1, 3, 6 or 12) and is applicable at each customer designated premises. The capacity ordered is the maximum number of DS3 services that can be terminated on a given service at the customer designated premises (e.g., a capacity of 3 can terminate 1, 2, or 3 DS3 services). One DS3 channel installed rate applies per customer designated premises at which the channel is terminated for each DS3 channel that is ordered. These charges will apply even if the customer designated premises and the serving wire center are collocated in a telephone company building.

ACCESS SERVICE

7. Special Access Service (Cont'd)

7.2 Rate Regulations (Cont'd)

7.2.1 Rate Categories (Cont'd)

(B) Channel Mileage

The Channel Mileage rate category provides for the end office equipment and the transmission facilities between the serving wire centers associated with two customer designated premises, between a serving wire center associated with a customer designated premises and a Telephone Company hub or between two Telephone Company hubs. Channel Mileage rates are made up of the Channel Mileage Facility rate and the Channel Mileage Termination rate.

(1) Channel Mileage Facility

The Channel Mileage Facility rate recovers the cost for the transmission path which extends between the Telephone Company serving wire centers and/or hub(s) and includes primarily outside plant used to provide the facility.

(2) Channel Mileage Termination

The Channel Mileage Termination rate recovers the cost for end office equipment associated with terminating the facility (i.e., basic circuit equipment and terminations at serving wire centers and hubs). The Channel Mileage Termination rate will apply at the serving wire center(s) for each customer designated premises and Telephone Company hub where the channel is terminated. If the Channel Mileage is between Telephone company bridging hubs, the Channel Mileage Termination rate will apply per Telephone Company designated hub. When the Channel Mileage Facility is zero (i.e., co-located serving wire centers), neither the Channel Mileage Facility nor the Channel Mileage Termination rate will apply.

ACCESS SERVICE

7. Special Access Service (Cont'd)

7.2 Rate Regulations (Cont'd)

7.2.1 Rate Categories (Cont'd)

(C) Optional Features and Functions

The Optional Features and Functions rate category provides for optional features and functions which may be added to a Special Access Service to improve its quality or utility to meet specific communications requirements. These are not necessarily identifiable with specific equipment, but rather represent the end result in terms of performance characteristics which may be obtained. These characteristics may be obtained by using various combinations of equipment. Although the equipment necessary to perform a specified function may be installed at various locations along the path of the service, they will be charged for as a single rate element.

Examples of Optional Features and Functions that are available include, but are not limited to, the following:

- Signaling Capability
- Hubbing Functions
- Conditioning
- Transfer Arrangements

A hub is a Telephone Company designated serving wire center at which bridging or multiplexing functions are performed. The bridging functions performed are to connect three or more customer designated premises in a multipoint arrangement. The multiplexing functions are to channelize digital facilities to individual services requiring a lower capacity or bandwidth. EXCHANGE CARRIER ASSOCIATION TARIFF F.C.C. NO. 4 identifies serving wire centers, hub locations and the type of bridging or multiplexing functions available.

Descriptions for each of the available Optional Features and Functions are set forth in 7.4 and 7.5 following.

7. Special Access Service (Cont'd)

7.2 Rate Regulations (Cont'd)

7.2.2 Types of Rates and Charges

There are three types of rates and charges. These are monthly rates, daily rates and nonrecurring charges. The rates and charges are described as follows:

(A) Monthly Rates

Monthly rates are recurring rates that apply each month or fraction thereof that a Special Access Service is provided. For billing purposes, each month is considered to have 30 days.

7. Special Access Service (Cont'd)

7.2 Rate Regulations (Cont'd)

7.2.2 Types of Rates and Charges (Cont'd)

(B) Nonrecurring Charges

Nonrecurring charges are one-time charges that apply for specific work activity (i.e., installation or change to an existing service). The types of nonrecurring charges that apply for Special Access Service are: installation of service, installation of optional features and functions, and service rearrangements.

(1) Installation of Service

Nonrecurring charges apply to each service installed. The nonrecurring charges for the installation of service are set forth in each channel type as a nonrecurring charge for the Channel Termination.

ACCESS SERVICE

7. Special Access Service (Cont'd)

7.2 Rate Regulations (Cont'd)

7.2.2 Types of Rates and Charges (Cont'd)

(B) Nonrecurring Charges (Cont'd)

(2) Service Rearrangements

Service rearrangements are changes to existing (installed) services which may be administrative only in nature, as set forth following, or that involve actual physical change to the service. Changes to pending orders are set forth in 5.2.2 preceding.

Changes in the physical location of the point of termination or customer designated premises are moves as set forth in 7.2.3 following.

Changes in the type of Service, Channel Termination which result in a change of the minimum period requirement will be treated as a discontinuance of the service and an installation of a new service.

Changes in ownership or transfer of responsibility from one customer to another will be treated as a discontinuance of the service and an installation of a new service, except under those conditions as set forth in 2.1.2(A) preceding.

Administrative changes will be made without charge(s) to the customer. Administrative changes are as follows:

- Change of customer name when the change of name is not the result of a transfer or change of ownership or responsibility,
- Change of customer or customer's end user premises address when the change of address is not a result of a physical relocation of equipment,
- Change in billing data (name, address, or contact name or telephone number),
- Change of agency authorization,
- Change of customer circuit identification,

7. Special Access Service (Cont'd)

7.2 Rate Regulations (Cont'd)

7.2.2 Types of Rates and Charges (Cont'd)

(B) Nonrecurring Charges (Cont'd)

(2) Service Rearrangements (Cont'd)

- Change of billing account number,
- Change of customer test line number,
- Change of customer or customer's end user contact name or telephone number, and
- Change of jurisdiction.

All other service rearrangements will be charged for as follows:

- If the change involves the addition of other customer designated premises to an existing multipoint service, the nonrecurring charge for the channel termination or will apply. The charge(s) will apply only for the location(s) that is being added.

- If the change involves the addition of an optional feature or function which has a separate nonrecurring charge, that nonrecurring charge will apply.

- For all other changes, including the addition of an optional feature or function without a separate nonrecurring charge, a charge equal to a channel termination nonrecurring charge will apply. Only one such charge will apply per service, per change.

7. Special Access Service (Cont'd)

7.2 Rate Regulations (Cont'd)

7.2.3 Moves

A move involves a change in the physical location of one of the following:

- The Point of Termination at the customer's premises
- The customer's premises

The charges for the move are dependent on whether the move is to a new location within the same building or to a different building.

(A) Moves Within the Same Building

When the move is to a new location within the same building, the charge for the move will be an amount equal to one half of the nonrecurring (i.e., installation) charge for the service termination affected. There will be no change in the minimum period requirements.

(B) Moves To a Different Building

Moves to a different building will be treated as a discontinuance and start of service and all associated nonrecurring charges will apply. New minimum period requirements will be established for the new services. The customer will also remain responsible for satisfying all outstanding minimum period charges for the discontinued service.

7.2.4 Minimum Periods

The minimum service period for DS3 High Capacity Service is twelve months.

ACCESS SERVICE

7. Special Access Service (Cont'd)

7.2 Rate Regulations (Cont'd)

7.2.5 Mileage Measurement

The mileage to be used to determine the monthly rate for the Channel Mileage Facility is calculated on the airline distance between the locations involved, i.e., the serving wire centers associated with two customer designated premises, a serving wire center associated with a customer designated premises and a Telephone Company hub, two Telephone Company hubs or between the serving wire center associated with a customer designated premises and a WATS serving office. The serving wire center associated with a customer designated premises is the serving wire center from which this customer designated premises would normally obtain dial tone.

Mileage charges are shown with each channel type. To determine the rate to be billed, first compute the mileage using the V&H coordinates method, as set forth in the EXCHANGE CARRIER ASSOCIATION TARIFF F.C.C. NO. 4, then multiply the resulting number of miles times the Channel Mileage Facility per mile rate, and add the Channel Mileage Termination rate for each termination. When the calculation results in a fraction of a mile, always round up to the next whole mile before determining the mileage and applying the rates.

When hubs are involved, mileage is computed and rates applied separately for each section of the Channel Mileage, i.e., customer designated premises serving wire center to hub, hub to hub and/or hub to customer designated premises serving wire center. However, when any service is routed through a hub for purposes other than customer specified bridging or multiplexing (e.g., the Telephone Company chooses to do so route for test access purposes), rates will be applied only to the distance calculated between the serving wire centers associated with the customer designated premises.

ACCESS SERVICE

7. Special Access Service (Cont'd)

7.2 Rate Regulations (Cont'd)

7.2.6 Facility Hubs

A customer has the option of ordering High Capacity services (i.e., DS1) to a facility hub for channelizing to individual services requiring lower capacity facilities (e.g., DS3 to DS1).

Different locations may be designated as hubs for different facility capacities, e.g., multiplexing from digital to digital may occur at one location. When placing an Access Order the customer will specify the desired hub. EXCHANGE CARRIER ASSOCIATION TARIFF F.C.C. NO. 4 identifies serving wire centers, hub locations and the type of multiplexing functions available.

Some of the types of multiplexing available include the following:

- from higher to lower bit rate
- from higher to lower bandwidth

Point to point services may be provided on channels of these services to a hub. The transmission performance for the point to point service provided between customer designated premises will be that of the lower capacity or bit rate.

ACCESS SERVICE

7. Special Access Service (Cont'd)

7.2 Rate Regulations (Cont'd)

7.2.6 Facility Hubs (Cont'd)

The Telephone Company will commence billing the monthly rate for the service to the hub on the date specified by the customer on the Access Order. Individual channels utilizing these services may be installed coincident with the installation of the service to the hub or may be ordered and/or installed at a later date, at the option of the customer. The customer will be billed for a High Capacity Channel Termination, Channel Mileage (when applicable), and the multiplexer at the time the service is installed. Individual service rates (by service type) will apply for a Channel Termination and additional Channel Mileage (as required) for each channelized service. These will be billed to the customer as each individual service is installed.

ACCESS SERVICE

7. Special Access Service (Cont'd)

7.2 Rate Regulations (Cont'd)

7.2.7 High Capacity Optional Rate Plans

There are two High Capacity Optional Rate plans; a Term Discount plan and a Capacity Discount plan.

The Term Discount plan applies to Special Access DS3 High Capacity Service Channel Termination, Channel Mileage Facility and Channel Mileage Termination monthly rates, as set forth following. The amount of the discount differs based on the length of the service commitment period selected by the customer.

Discounts for the Term Discount plan are only applied to High Capacity Service provided a customer within the same state and LATA by the same telephone company.

Discounts for the Capacity Discount plan are only applied to Special Access DS3 High Capacity Service Channel Termination monthly rates as set forth in 7.5.6 following.

The minimum service period on a monthly rate basis is one month for DS1 service and twelve months for DS3 service.

7. Special Access Service (Cont'd)

7.2 Rate Regulations (Cont'd)

7.2.7 High Capacity Optional Rate Plans (Cont'd)

(A) Term Discounts

DS3 High Capacity Special Access Service may be ordered at the customer's option on a monthly rate basis or for Term Discount periods of 36 months (3 years) or 60 months (5 years).

The minimum service period for all Term Discount plans is twelve months. The customer must specify the length of the service commitment period at the time the service is ordered.

For customers that subscribe to the Term Discount plan for 36 or 60 months, the Term Discount Rates as set forth in 7.5.6 following will be frozen from Company initiated increases, for the entire discount period at the rates in effect at the beginning of the term Discount period.

If a Term Discount rate decrease occurs during the term of an existing Term Discount plan, the decreased rate will be applied automatically to the remainder of the current Term Discount period.

At the end of the Term Discount period, the customer may convert to month-to-month service or subscribe to a new Term Discount Plan. If the customer does not make a choice by the end of the discount period, the rates will automatically convert to month-to-month service rates.

ACCESS SERVICE

7. Special Access Service (Cont'd)

7.2 Rate Regulations (Cont'd)

7.2.7 High Capacity Optional Rate Plans (Cont'd)

(A) Term Discounts (Cont'd)

To be included in a Service Term Discount plan, all eligible High Capacity rate elements must be ordered for the same commitment term (i.e., all 36 months or all 60 months) and with the same service date. When additional capacity is subsequently added, it will be available only on a month-to-month basis unless the discount period of the entire service is upgraded.

Eligible DS3 High Capacity rate elements are those Channel Terminations, Channel Mileage Facility and Channel Mileage Terminations provided to a customer within the same state and LATA by the same telephone company.

7. Special Access Service (Cont'd)

7.2 Rate Regulations (Cont'd)

7.2.7 High Capacity Optional Rate Plans (Cont'd)

(A) Term Discounts (Cont'd)

(1) Upgrades in Term Discounts

Services provided under monthly rates or Term Discount rates may be upgraded to a Term Discount plan at any time without incurring Channel Termination nonrecurring charges or discontinuance charges for existing services. The new Term Discount plan must meet or exceed the service term of the plan being upgraded. For example, a service with a 36-month commitment period may be upgraded to a new 36-month or 60-month service period. The monthly rates will be those that are in effect at the time the service is upgraded. A new minimum service period applies to all High Capacity Service that is upgraded.

7. Special Access Service (Cont'd)

7.2 Rate Regulations (Cont'd)

7.2.7 High Capacity Optional Rate Plans (Cont'd)

(A) Term Discounts (Cont'd)

(2) Upgrades in Capacity (DS1 to DS3)

A new minimum service period applies to all upgrades. Channel Termination nonrecurring charges for an equivalent channel capacity of the existing services being upgraded to the higher speed service will not be assessed. For example, 30 DS1 Services are being upgraded to DS3 Service. A capacity of 3 is installed at the customer's request. A total of 2 DS3 Channel rate elements will be installed without Channel Termination nonrecurring charges being assessed as it will require 2 DS3 Channel rate elements to provide the equivalent channel capacity of the existing services. Channel Termination nonrecurring charges will not apply to the upgraded lower speed services placed on the higher speed service if requested at the same time as the upgrade request. Channel Termination nonrecurring charges will apply for capacity that exceeds the existing equivalent channel capacity.

7. Special Access Service (Cont'd)

7.2 Rate Regulations (Cont'd)

7.2.7 High Capacity Optional Rate Plans (Cont'd)

(A) Term Discounts (Cont'd)

(3) Discontinuance of Service

If the customer chooses to disconnect all or a portion of the service prior to the expiration of the Term Discount period, discontinuance charges will apply to the portion of the service being discontinued.

Should the customer choose to discontinue a Term Discount plan prior to the completion of the minimum service period, discontinuance charges will apply. Discontinuance charges equal to one-hundred percent of the total undiscounted monthly rates, less any amounts previously paid, will apply for the minimum service period.

Additionally, discontinuance charges of fifty percent of the total undiscounted monthly DS3 charges will apply to the remaining portion of the discount service term.

Should the customer choose to discontinue service ordered under a Term Discount plan after the minimum service period but before the completion of the discount period, discontinuance charges will apply. Discontinuance charges of fifty percent for DS3 Service, of the total undiscounted monthly charges will apply to the remaining portion of the discount period. For example, a customer has a DS3 Service which it chooses to discontinue after 33 months into a 60-month service term. The discontinuance charge would be 0.50 times 27 months times the undiscounted monthly rate for that service.

ACCESS SERVICE

7. Special Access Service (Cont'd)

7.2 Rate Regulations (Cont'd)

7.2.7 High Capacity Optional Rate Plans (Cont'd)

(B) DS3 Capacity Discounts

DS3 High Capacity Service may also be ordered at discounted rates in capacities of 3, 6 and 12 systems under a Capacity Discount Plan. Capacity Discounts apply only to DS3 Channel Terminations (i.e., DS3 Capacity Interfaces and DS3 Channels Installed). DS3 Capacity Discounts may be ordered as part of, or separate from Term Discount plans. When ordered in conjunction with Term Discount plans, the DS3 Channel Terminations must all be ordered under the same month-to-month rate or Term Discount plan with the same service period and service date.

For DS3 High Capacity Channel Terminations the Capacity Interface must be ordered before or in conjunction with an associated DS3 Channel Installed. In addition, the Capacity Interface can not be disconnected until all of the DS3 Channels Installed are disconnected.

High Capacity Channel Mileage Facility and Channel Mileage Termination charges will apply as required Per DS3 Channel Installed. Capacity Discounts will not apply to these rate elements.

Capacity Discounts will only apply on DS3 Channel Terminations ordered between a serving wire center and customer location, over the same route. Channel Terminations associated with facilities provided between the same serving wire center and customer location via a second or alternate route will not be included as part of the same Capacity Discount plan as the primary route.

The minimum service period for all Capacity Discount plans is twelve months.

7. Special Access Service (Cont'd)

7.2 Rate Regulations (Cont'd)

7.2.7 High Capacity Optional Rate Plans (Cont'd)

(B) DS3 Capacity Discounts (Cont'd)

(1) Upgrades in DS3 Capacity Discounts

Services rated under the DS3 monthly rate plan may be upgraded to a Capacity Discount Plan at any time, without incurring Channel Termination nonrecurring or discontinuance charges for existing services.

Customers with a capacity of 1, 3 or 6 DS3 High Capacity Special Access Systems may upgrade to a new Capacity Discount without incurring Channel Termination nonrecurring or discontinuance charges for existing capacity. This upgrade will be allowed provided the customer designated premises remain the same. Additionally, the new Channel Termination capacity must exceed the Channel Termination capacity of the plan being upgraded. For example, a customer orders a Capacity of 3 DS3 Interface with 2 DS3 Channels Installed. Subsequently, the customer requests an upgrade to a Capacity of 12 DS3 Interface and adds an additional 3 DS3 Channels installed. The monthly rates will be those that are in effect at the time the service is upgraded. A new minimum service period applies to all services that are upgraded. Full Channel Termination nonrecurring charges as set forth in Section 7.5.6 will apply only to the 3 additional DS3 Channels added at the time of the discount plan upgrade.

7. Special Access Service (Cont'd)

7.2 Rate Regulations (Cont'd)

7.2.7 High Capacity Optional Rate Plans (Cont'd)

(B) DS3 Capacity Discounts (Cont'd)

(1) Upgrades in DS3 Capacity Discounts (Cont'd)

Customers that subscribe to DS3 Capacity Discount plan may upgrade to a larger Capacity Interface. Discontinuance charges will not apply if all the following conditions are met:

- the customer's order for the disconnect of the current DS3 Capacity Interface and order for the installation of the upgraded DS3 Capacity Interface are received by the telephone company at the same time and specifies that the capacity of service is to be upgraded,

- the customer's disconnect order for the existing DS3 Service must reference the new connection order,

- the new service is provided between the same customer locations as the discontinued service,

- the new service has a DS3 Capacity Interface larger than the Capacity Interface of the discount plan or plans being discontinued and,

- any applicable DS3 High Capacity Term Discount plan time period is reestablished or upgraded at the time of the upgrade in the Capacity Discount plan.

ACCESS SERVICE

7. Special Access Service (Cont'd)

7.3 Surcharge for Special Access Service

7.3.1 General

(A) Special access services provided under this tariff may be subject to the monthly Special Access Surcharge.

7.3.2 Application

(A) The Special Access Surcharge will apply to each interstate Special Access Service that terminates on an end user's PBX or other device where, through a function of the device, the Special Access Service interconnects to the local exchange network. Interconnection functions include, but are not limited to, wiring and software functions, bridging, switching or patching of calls or stations. the Surcharge will apply irrespective of whether the interconnection function is performed in equipment located at the customer's premises or in a Centrex Co-type switch.

ACCESS SERVICE

7. Special Access Service (Cont'd)

7.3 Surcharge for Special Access Service (Cont'd)

7.3.2 Application (Cont'd)

(B) Special Access Service will be exempted from the Surcharge by the Telephone Company upon receipt of the customer's written certification for the following Special Access Service terminations:

(1) an open-end termination in a Telephone Company switch of an FX line, including CCSA and CCSA-equivalent ONALs; or

(2) an analog channel termination that is used for radio or television program transmission; or

(3) a termination used for TELEX service; or

(4) a termination that by the nature of its operating characteristics could not make use of Telephone Company common lines such as, terminations which are restricted through hardware or software; or

(5) a termination that interconnects either directly or indirectly to the local exchange network where the usage is subject to Carrier Common Line charges such as, where the Special Access Service accesses only FGA and no local exchange lines, or Special Access Service between customer points of termination, or Special Access Service connecting CCSA or CCSA-type equipment (inter-machine trunks); or

(6) a termination that the customer certifies to the Telephone Company is not connected to a PBX or other device which interconnects the Special Access Service to a local exchange subscriber line.

ACCESS SERVICE

7. Special Access Service (Cont'd)

7.3 Surcharge for Special Access Service (Cont'd)

7.3.3 Exemption of Special Access Surcharge

(A) Special Access Services which are terminated as set forth in 7.3.2(B) preceding will be exempted from the Special Access Surcharge if the customer provides the Telephone Company with written exemption certification. The certification may be provided to the Telephone Company (1) at the time the Special Access Service is ordered or installed; (2) at such time as the service is reterminated to a device which does not interconnect to local exchange facilities, or (3) at such time as the service becomes associated with a Switched Access Service that is subject to Carrier Common Line Charges.

(B) The exemption certification is to be provided by the customer ordering the service. The certification must be signed by the customer or authorized representative and include the category of exemption, as set forth in 7.3.2(B) preceding, for each termination, and the date when the exemption is effective.

(C) The customer shall also notify the Telephone Company when an exempted Special Access Service is changed or reterminated such that the exemption is no longer applicable.

(D) The Telephone Company will work cooperatively with the customer to resolve any questions regarding the exemption certification. In addition, the Telephone Company may withhold exemption of the service until the dispute is resolved.

7. Special Access Service (Cont'd)

7.3 Surcharge for Special Access Service (Cont'd)

7.3.4 Rate Regulations

(A) The Surcharge will apply as set forth in 7.3.2(A) preceding, except that a surcharge will be assessed on a per voice grade equivalent basis for Special Access Services derived from High Capacity Special Access Services as shown in the following example:

Special Access Service	Voice Grade Equivalent		Surcharge		Monthly Charge
DS1	24	x	$25	=	$600.00

In the case of multipoint Special Access Services, one Special Access Surcharge will apply for each termination of a Special Access Channel at an end user's premises.

(B) The Telephone Company will bill the appropriate Special Access Surcharge to the ordering customer for each interstate Special Access Service installed unless exemption certification is provided as set forth in 7.3.3 preceding.

(C) If a written certification is not received at the time the Special Access Service is obtained, the Surcharge will be applied. Exempt status will become effective on the certification date indicated by the customer, subject to the regulations set forth in (D) following.

7. Special Access Service (Cont'd)

7.3 Surcharge for Special Access Service (Cont'd)

7.3.4 Rate Regulations (Cont'd)

(D) Crediting the Surcharge

The Telephone Company will cease billing the Special Access Surcharge when certification, as set forth in 7.3.3 preceding, is received. If the status of the Special Access Service was changed prior to receipt of the exemption certification, the Telephone Company will credit the customer's account, not to exceed ninety (90) days, based on the effective date of the change as specified by the customer in the letter of certification.

(E) Surcharge Payment Deferral Provision

The Telephone Company will bill the surcharge on Special Access facilities in service as of June 1, 1986, used in the provision of WATS or WATS-type service through a Telephone Company designated WATS Serving Office (WSO). Payment of such surcharge may be deferred, without penalty, for up to ninety (90) days from the date of the first bill rendered for the Special Access Surcharge.

If appropriate exemption certification is not received by the Telephone Company by the end of the ninety (90) days deferral period, the billed Special Access Surcharge will become due. These charges, if unpaid, will be subject to a late payment charge as set forth in Section 2.4.1(B)(2) preceding.

7.3.5 Rate

	USOC	Monthly Rate
Surcharge for Special Access Service -Per Voice Grade Equivalent	S25	$25.00

ACCESS SERVICE

7. Special Access Service (Cont'd)

7.4 Digital Data Service

7.4.1 Basic Channel Description

A Digital Data channel is a channel for duplex four-wire transmission of synchronous serial data at the rate of 56 kbps. The actual bit rate is a function of the channel interface selected by the customer. The channel provides a synchronous service with timing provided by the Telephone Company through the Telephone Company's facilities to the customer in the received bit stream. Digital Data channels are only available via Telephone Company designated hubs and are provided between customer designated premises or between a customer designated premises and a Telephone Company hub or hubs.

The customer shall be responsible for providing the Channel Service Unit-type equipment or other Network Channel Terminating Equipment associated with the Digital Data channel at the customer premises. The interim program for interconnection of such equipment is set forth in Technical Reference PUB AS No. 1.

7.4.2 Technical Specifications Packages

	Package D-					
Parameter	1	2	3	4	5	6
Error-Free Seconds	X	X	X	X	X	X

The Telephone Company will provide a channel capable of meeting a monthly average performance equal to or greater than 99.875% error-free seconds (if provided through a Digital Data hub) while the channel is in service, if it is measured through a CSU equivalent which is designed, manufactured, and maintained to conform with the specifications contained in Technical Reference PUB 62310.

Voltages which are compatible with Digital Data Service are delineated in Technical Reference TR-NPL-000341

7.4.3 Channel Interfaces

The following channel interfaces (CIs) define the bit rates that are available for a Digital Data channel:

*When 64 kbps service is multiplexed on a DS1 High Capacity service, the DS1 service must be equipped to provide clear channel capability.

ACCESS SERVICE

7. Special Access Service (Cont'd)

7.4 Digital Data Service (Cont'd)

7.4.3 Channel Interfaces (Cont'd)

CI	Bit Rate
DU-56	56.0 kbps
DU-64	64.0 kbps

Compatible channel interfaces are set forth in 10.3 following.

7.4.4 Optional Features and Functions

(A) Central Office Bridging Capability

The bridging functions performed are to connect three or more customer designated premises in a multipoint arrangement. Bridging is not available on a 64.0 kbps channel.

(B) Secondary Channel Capability

The secondary channel option provides the customer with the capability to derive an independent, slower speed auxiliary (secondary) channel that operates in parallel with a primary Digital Data Channel without reducing the operating speed of the primary channel. It is available for 56 kbps channels. For 56 kbps channels, the option may be used only in two-point configurations which do not require the installation of loop repeater equipment. The technical parameters for the channels with a secondary channel option are set forth in Technical Publication - TR-62310. The speeds of the secondary channels are as follows:

2,666 bps with a primary 56 kbps channel

This optional feature is subject to availability.

ACCESS SERVICE

7. Special Access Service (Cont'd)

7.4 Digital Data Service (Cont'd)

7.4.5 Rates and Charges

	USOC	Monthly Rate	Nonrecurring Charge
(A) Channel Termination			
- Per termination			
- 56.0 kbps	T6ECS	$ 51.44	$211.82
- 64.0 kbps	T6ECS	$ 51.44	$211.82

	USOC	Monthly Rate
(B) Channel Mileage		
(1) Channel Mileage Facility		
- Per Mile		
- 56.0 kbps	CMF	$ 1.54
- 64.0 kbps	CMF	$ 1.54
(2) Channel Mileage Termination		
- Per Termination		
- 56.0 kbps	CMT	$11.85
- 64.0 kbps	CMT	$11.85

ACCESS SERVICE

7. Special Access Service (Cont'd)

7.4 Digital Data Service (Cont'd)

7.4.5 Rates and Charges (Cont'd)

(C) Optional Features and Functions

	USOC	Monthly Rate	Nonrecurring Charge
(1) Bridging - Per port	BCNDA	$ 26.23	None
(2) Secondary Channel Capability	SCC	ICB	ICB

ACCESS SERVICE

7. Special Access Service (Cont'd)

7.5 High Capacity Service

7.5.1 Basic Channel Description

A High Capacity channel is a channel for the transmission of nominal 1.544 Mbps (DS1) or 44.736 Mbps (DS3) isochronous serial data. The actual bit rate is a function of the channel interface selected by the customer. High Capacity channels are provided between customer designated premises or between a customer designated premises and a Telephone Company hub or hubs.

The customer may provide the Network Channel Terminating Equipment associated with the High Capacity channel at the customer's premises.

DS3 Channel Terminations are available utilizing an Electrical or Optical Interface. The Interfaces will have the characteristics of their respective signals at the Point of Termination.

Electrical Interface Channel Terminations will be provisioned utilizing Telephone Company provided equipment.

Optical Interface Channel Terminations will be provisioned utilizing Telephone Company provided equipment in the serving wire center. The Telephone Company will identify approved equipment types for use in conjunction with Telephone Company provided equipment. The customer must select and provide a system from this equipment at their premises.

ACCESS SERVICE

7. Special Access Service (Cont'd)

7.5 High Capacity Service (Cont'd)

7.5.2 Technical Specifications Packages

	Package		
	HC1		HC3
Parameters			
Error-Free Seconds	X		
Optional Features and Functions			
Automatic Loop Transfer	X		
Battery Back-Up		X	
Central Office Multiplexing: DS3 to DS1			X
Clear Channel Capability	X		

A channel with technical specifications package HC1 will be capable of an error-free second performance of 98.75% over a continuous 24 hour period as measured at the 1.544 Mbps rate through a CSU equivalent which is designed, manufactured, and maintained to conform with the specifications contained in Technical Reference PUB 62411.

7. Special Access Service (Cont'd)

7.5 High Capacity Service (Cont'd)

7.5.3 Channel Interfaces

The following channel interfaces (CIs) define the bit rates that are available for a High Capacity channel:

CI	Bit Rate
DS-15	1.544 Mbps (DS1)
DS-44	44.736 Mbps (DS3)

Compatible channel interfaces are set forth in 10.3 following.

7.5.4 Optional Features and Functions

(A) Automatic Loop Transfer

The Automatic Loop Transfer provides protection on a 1xN basis against failure of the facilities between a customer designated premises and the wire center serving that premises. Protection is furnished through the use of a switching arrangement that automatically switches to a spare channel line when a working line fails. The spare channel is not included as a part of the option. This option requires compatible equipment at both the serving wire center and the customer premises. The customer is responsible for providing the equipment at its premises.

7. Special Access Service (Cont'd)

7.5 High Capacity Service (Cont'd)

7.5.4 Optional Features and Functions (Cont'd)

(B) Battery Back-Up

Battery Back-Up is an optional DC power source to be used for emergency power for the channelizing equipment.

ACCESS SERVICE

7. Special Access Service (Cont'd)

7.5 High Capacity Service (Cont'd)

7.5.4 Optional Features and Functions (Cont'd)

(C) Central Office Multiplexing

(1) DS3 to DS1

An arrangement that converts a 44.736 Mbps channel to 28 DS1 channels using digital time division multiplexing.

ACCESS SERVICE

7. Special Access Service (Cont'd)

7.5 High Capacity Service (Cont'd)

7.5.4 Optional Features and Functions (Cont'd)

(D) Clear Channel Capability (CCC)

(1) CCC is an arrangement that allows a customer to transport 1.536 Mbps information rate signals over a 1.544 Mbps High Capacity channel or over a 1.544 Mbps High Capacity channel derived from a multiplexed 44.736 Mbps High Capacity channel with no constraint on the quantity or sequence of one and zero bits. This arrangement requires the customer signal at the channel interface to conform to Bipolar with Eight Zero Substitution (B8ZS) line code as described in Technical Reference TR-NPL-000054 and Technical Reference TR-INS-000342.

(2) CCC is provided, subject to availability of facilities, on DS1/1.544 Mbps High Capacity channels between two customer designated premises and on multiplexed DS3/44.736 Mbps High Capacity channels or multiplexed DS1/1.544 Mbps High Capacity channels or multiplexed DS1/1.544 Mbps High Capacity channels* between a telephone company hub office and a customer designated premises. The wire centers providing CCC are identified in NATIONAL EXCHANGE CARRIER ASSOCIATION, INC., WIRE CENTER INFORMATION, TARIFF F.C.C. NO. 4.

(3) No charge applies when the CCC optional feature is ordered at the same time the High Capacity service is ordered. If the CCC optional feature is ordered as an addition to an existing High Capacity Service, a nonrecurring charge is applicable as set forth in 7.5.5 following. The customer must agree to out-of-service periods required to add this feature to an existing High Capacity Service.

*Available only on a DS1-to-Digital multiplexed configuration.

ACCESS SERVICE

7. Special Access Service (Cont'd)

7.5 High Capacity Service (Cont'd)

7.5.5 Rates and Charges - DS1

(A) Density Pricing Zone 1

	USOC	Monthly Rate	Nonrecurring Charge
(1) Channel Termination - Per Termination - 1.544 Mbps	TMECS	$111.10	$806.97

	USOC	Monthly Rate
(2) Channel Mileage		
(a) Channel Mileage Facility - Per Mile - 1.544 Mbps	CMF	$ 12.14
(b) Channel Mileage Termination - Per Termination - 1.544 Mbps	CMT	$146.76
(c) Automatic Loop Transfer - Per arrangement**	T59	$332.86

	USOC	Monthly Rate	Nonrecurring Charge
(d) Clear Channel Capability - Per 1.544 Mbps Transmission Path	CLR	None	$ 95.82

* A channel of this DS1 to the Hub can be used for Digital Data service.
** An additional Channel Termination charge will apply whenever the spare line is provided as a leg to the customer premises.

ACCESS SERVICE

7. Special Access Service (Cont'd)

7.5 High Capacity Service (Cont'd)

7.5.6 Rates and Charges - DS3

7.5.6.1 Monthly Rates and Charges - Density Pricing Zone 1

	USOC	Monthly Rate	Nonrecurring Charges
(A) Channel Termination Per Termination			
(1) Electrical Interface			
Capacity of 1 Interface	THJAX	$1,446.41	$423.86
Capacity of 3 Interface	THJJX	1,951.75	
- Per DS3	TH5JX	190.64	423.86
Capacity of 6 Interface	HDJAX	3,343.69	
- Per DS3	HD5AX	144.24	423.86
Capacity of 12 Interface	THJNX	4,636.79	
- Per DS3	TH5NX	144.24	423.86
(2) Optical Interface			
Capacity of 1 Interface	TH2AX	$1,474.65	$423.86
Capacity of 3 Interface	TH2JX	1,817.60	
- Per DS3	TH8JX	130.12	423.86
Capacity of 6 Interface	HD2AX	2,815.16	
- Per DS3	HD8AX	97.84	423.86
Capacity of 12 Interface	TH2NX	3,692.69	
- Per DS3	TH8NX	97.84	423.86

ACCESS SERVICE

7. Special Access Service (Cont'd)

7.5 High Capacity Service (Cont'd)

7.5.6 Rates and Charges - DS3 (Cont'd)

7.5.6.1 Monthly Rates and Charges - Density Pricing Zone 1 (Cont'd)

	USOC	Monthly Rate	Nonrecurring Charges
(B) Channel Mileage			
(1) Channel Mileage Facility - Per Mile	CMF	$121.04	None
(2) Channel Mileage Termination * - Per Termination	CMT	$528.54	$507.93
(C) Optional Features and Functions			
(1) Multiplexing, Per Arrangement DS3 to DS1	MQ3	$293.52	
(2) Battery Back-Up, Per Arrangement	BU6	$ 91.79	

* Nonrecurring charges apply to Channel Mileage Terminations when installed without a Channel Termination.

ACCESS SERVICE

7. Special Access Service (Cont'd)

7.5 High Capacity Service (Cont'd)

7.5.6 Rates and Charges - DS3 (Cont'd)

7.5.6.2 36 Month Rates and Charges - Density Pricing Zone 1

	USOC	Monthly Rate	Nonrecurring Charges
(A) Channel Termination Per Termination			
(1) Electrical Interface			
Capacity of 1 Interface	THJAX	$1,301.77	$423.86
Capacity of 3 Interface	THJJX	1,756.57	
- Per DS3	TH5JX	171.57	423.86
Capacity of 6 Interface	HDJAX	3,009.32	
- Per DS3	HD5AX	129.81	423.86
Capacity of 12 Interface	THJNX	4,173.11	
- Per DS3	TH5NX	129.81	423.86
(2) Optical Interface			
Capacity of 1 Interface	TH2AX	$1,327.19	$423.86
Capacity of 3 Interface	TH2JX	1,635.84	
- Per DS3	TH8JX	117.10	423.86
Capacity of 6 Interface	HD2AX	2,533.64	
- Per DS3	HD8AX	88.06	423.86
Capacity of 12 Interface	TH2NX	3,323.42	
- Per DS3	TH8NX	88.06	423.86

ACCESS SERVICE

7. Special Access Service (Cont'd)

7.5 High Capacity Service (Cont'd)

7.5.6 Rates and Charges - DS3 (Cont'd)

7.5.6.2 36 Month Rates and Charges - Density Pricing Zone 1 (Cont'd)

	USOC	Monthly Rate	Nonrecurring Charges
(B) Channel Mileage			
(1) Channel Mileage Facility - Per Mile CMF		$108.93	None
(2) Channel Mileage Termination * - Per Termination	CMT	$475.68	$507.93
(C) Optional Features and Functions			
(1) Multiplexing, Per Arrangement DS3 to DS1	MQ3	$293.52	
(2) Battery Back-Up, Per Arrangement	BU6	$ 91.79	

* Nonrecurring charges apply to Channel Mileage Terminations when installed without a Channel Termination.

ACCESS SERVICE

7. Special Access Service (Cont'd)

7.5 High Capacity Service (Cont'd)

7.5.6 Rates and Charges - DS3 (Cont'd)

7.5.6.3 60 Month Rates and Charges - Density Pricing Zone 1

	USOC	Monthly Rate	Nonrecurring Charges
(A) Channel Termination Per Termination			
(1) Electrical Interface			
Capacity of 1 Interface	THJAX	$1,157.13	$423.86
Capacity of 3 Interface	THJJX	1,561.40	
- Per DS3	TH5JX	152.51	423.86
Capacity of 6 Interface	HDJAX	2,674.95	
- Per DS3	HD5AX	115.39	423.86
Capacity of 12 Interface	THJNX	3,709.43	
- Per DS3	TH5NX	115.39	423.86
(2) Optical Interface			
Capacity of 1 Interface	TH2AX	$1,179.72	$423.86
Capacity of 3 Interface	TH2JX	1,454.08	
- Per DS3	TH8JX	104.09	423.86
Capacity of 6 Interface	HD2AX	2,252.12	
- Per DS3	HD8AX	78.27	423.86
Capacity of 12 Interface	TH2NX	2,954.15	
- Per DS3	TH8NX	78.27	423.86

ACCESS SERVICE

7. Special Access Service (Cont'd)

7.5 High Capacity Service (Cont'd)

7.5.6 Rates and Charges - DS3 (Cont'd)

7.5.6.3 60 Month Rates and Charges - Density Pricing Zone 1 (Cont'd)

	USOC	Monthly Rate	Nonrecurring Charges
(B) Channel Mileage			
(1) Channel Mileage Facility - Per Mile CMF		$ 96.83	None
(2) Channel Mileage Termination * - Per Termination	CMT	$422.83	$507.93
(C) Optional Features and Functions			
(1) Multiplexing, Per Arrangement DS3 to DS1	MQ3	$293.52	
(2) Battery Back-Up, Per Arrangement	BU6	$ 91.79	

* Nonrecurring charges apply to Channel Mileage Terminations when installed without a Channel Termination.

ACCESS SERVICE

8. Specialized Service or Arrangements

8.1 General

Specialized Service or Arrangements may be provided by the Telephone Company, at the request of a customer, on an individual case basis if such service or arrangements meet the following criteria:

- The requested service or arrangements are not offered under other sections of this tariff.
- The facilities utilized to provide the requested service or arrangements are of a type normally used by the Telephone Company in furnishing its other services.
- The requested service or arrangements are provided within a LATA.
- The requested service or arrangements are compatible with other Telephone Company services, facilities, and its engineering and maintenance practices.
- This offering is subject to the availability of the necessary Telephone Company personnel and capital resources.

8.2 Rates and Charges

Rates and charges and additional regulations if applicable, for specialized service or arrangements provided on an individual case basis are filed following:

ACCESS SERVICE

9. Additional Engineering, Additional Labor and Miscellaneous Services

In this section normally scheduled working hours are an employee's scheduled work period in any given calendar day (e.g., 7:00 a.m. to 4:00 p.m.) for the application of rates based on working hours. A Miscellaneous Service Order Charge applies to any service, or combination of services ordered simultaneously, from this section of the Tariff for which a service order is not already pending (with the exception of Presubscription (9.5.2), International Blocking (9.5.6) and 900 Blocking (9.5.7) which do not have the charge applied). The Miscellaneous Service Order Charge is an administrative charge designed to compensate for the expenses associated with service order issuance.

The charge always applies to the following services since a pending service order would not exist: Overtime Repair (9.2.2), Standby Repair (9.2.3), Testing and Maintenance with Other Telephone Companies other than when in conjunction with Acceptance Testing (9.2.4), Other Labor (9.2.5) and Maintenance of Service (9.3.1). The Miscellaneous Service Order Charge will also apply to the following services if they are ordered subsequent to the initial installation of the associated access service, thereby necessitating the issuance of another service order: Restoration Priority (9.5.1) and Controller Arrangement (9.5.3).

The charge does not apply to the following services since there would exist a pending service order: Additional Engineering (9.1), Overtime Installation (9.2.1), Standby Acceptance Testing (9.2.3), Testing and Maintenance with Other Telephone Companies when in conjunction with Acceptance Testing (9.2.4), Additional Cooperative Acceptance Testing (9.3.2(A)(1)) and Additional Automatic Testing (9.3.2(A)(2)). This charge is as follows:

		USOC	Charge
-	Miscellaneous Service Order Charge, per occurrence	MOC	$26.30

9.1 Additional Engineering

Additional Engineering will be provided by the Telephone Company at the request of the customer only when:

(A) A customer requests additional technical information after the Telephone Company has already provided the technical information normally included on the Design Layout Report (DLR) as set forth in 6.1.4 and 7.1.6 preceding.

(B) Additional engineering time is incurred by the Telephone Company to engineer a customer's request for a customized service as set forth in 7.1.2 preceding.

ACCESS SERVICE

9. Additional Engineering, Additional Labor and Miscellaneous Services (Cont'd)

9.1 Additional Engineering (Cont'd)

(C) A customer requests a Design Change, additional engineering time is incurred by the Telephone Company for the engineering review as set forth in 5.2.2(C). The charge for additional engineering will apply whether or not the customer authorizes the Telephone Company to proceed with the design change.

(D) When the Telephone Company determines additional engineering is required as set forth in 5.1.2(C) preceding.

The Telephone Company will notify the customer that additional engineering charges, as set forth in 9.4.1 following, will apply before any additional engineering is undertaken.

9.2 Additional Labor

Additional Labor is that labor requested by the customer on a given service and agreed to by the Telephone Company as set forth in 9.2.1 through 9.2.5 following.

9.2.1 Overtime Installation

Overtime Installation is that Telephone Company installation effort outside of normally scheduled working hours.

9.2.2 Overtime Repair

Overtime Repair is that Telephone Company maintenance effort performed outside of normally scheduled working hours.

9.2.3 Stand by

Stand by includes all time in excess of one-half (1/2) hour during which Telephone Company personnel stand by to make installation acceptance tests or cooperative tests with a customer to verify repair on a given service.

ACCESS SERVICE

9. Additional Engineering, Additional Labor and Miscellaneous Services (Cont'd)

9.2 Additional Labor (Cont'd)

9.2.4 Testing and Maintenance with Other Telephone Companies

Additional testing, maintenance or repair of facilities which connect to facilities of other telephone companies, is that which is in addition to normal effort required to test, maintain or repair facilities provided solely by the Telephone Company.

9.2.5 Other Labor

Other labor is that additional labor not included in 9.2.1 through 9.2.4 preceding and labor incurred to accommodate a specific customer request that involves only labor which is not covered by any other section of this tariff.

The Telephone Company will notify the customer that additional labor charges, as set forth in 9.4.2 following, will apply before any additional labor is undertaken.

9.3 Miscellaneous Services

9.3.1 Maintenance of Service

(A) When a customer reports a trouble to the Telephone Company for clearance and no trouble is found in the Telephone Company's facilities, the customer shall be responsible for payment of a Maintenance of Service Charge for the period of time from when Telephone Company personnel are dispatched to the customer designated premises to when the work is completed. Failure of Telephone Company personnel to find trouble in Telephone Company facilities will result in no charge if the trouble is actually in those facilities, but not discovered at the time.

(B) The customer shall be responsible for payment of a Maintenance of Service charge when the Telephone Company dispatches personnel to the customer designated premises, and the trouble is in equipment or communications systems provided by other than the Telephone Company or in detariffed CPE provided by the Telephone Company.

ACCESS SERVICE

9. Additional Engineering, Additional Labor and Miscellaneous Services (Cont'd)

9.3 Miscellaneous Services (Cont'd)

9.3.1 Maintenance of Service (Cont'd)

In either (A) or (B) preceding, no credit allowance will be applicable for the interruption involved if the Maintenance of Service Charge applies.

(C) Rates for Maintenance of Service can be found in 9.4.2 following.

9.3.2 Testing Services

Testing Services offered under this section of the tariff are optional and subject to rates and charges as set forth in 9.4.2 following. Other testing services, as described in 6.1.5 and 7.1.7 preceding are provided by the Telephone Company in association with Access Services and are furnished at no additional charge.

Testing services are normally provided by Telephone company personnel at Telephone Company locations. However, provisions are made in 9.3.2(A)(3) and 9.3.2(B)(2) following for a customer to request Telephone Company personnel to perform testing services at the customer's premises.

The offering of Testing Services under this section of the tariff is made subject to the availability of the necessary qualified personnel and test equipment at the various test locations mentioned in (A) and (B) following:

(A) Switched Access Service

Testing Services for Switched Access are comprised of (a) tests which are performed during the installation of a Switched Access Service, i.e., Acceptance Tests, (b) tests which are performed after acceptance of such access services by a customer which are without charge i.e., routine testing and (c) additional tests which are performed during or after acceptance of such access services by a customer for which additional charges apply, i.e., Additional Cooperative Acceptance Tests and in-service tests.

ACCESS SERVICE

9. Additional Engineering, Additional Labor and Miscellaneous Services (Cont'd)

9.3 Miscellaneous Services (Cont'd)

9.3.2 Testing Services (Cont'd)

(A) Switched Access Service (Cont'd)

Routine tests are those tests performed by the Telephone Company on a regular basis, as set forth in 6.1.5 preceding which are required to maintain Switched Access Service. Additional in-service tests may be done on an automatic basis (no Telephone Company or customer technicians involved), on a manual basis, (Telephone Company technician(s) involved at Telephone Company offices(s) and Telephone Company or customer technician(s) involved at the customer designated premises).

Testing services are ordered to the end office for FGD. Testing Services for Directory Assistance Service not routed through an access tandem is ordered to a Directory Assistance Location for each NPA.

The customer shall provide the Remote Office Test Line priming data to the Telephone Company, as appropriate, to support routine testing as set forth in 6.1.5(B) preceding of AAT as set forth in 9.3.2(A)(2) following.

The customer shall make the facilities to be tested available to the Telephone Company at times mutually agreed upon.

(1) Additional Cooperative Acceptance Testing

Additional Cooperative Acceptance Testing of Switched Access Service involves the Telephone Company provision of a technician at its premises, with suitable test equipment to perform the required tests.

ACCESS SERVICE

9. Additional Engineering, Additional Labor and Miscellaneous Services (Cont'd)

9.3 Miscellaneous Services (Cont'd)

9.3.2 Testing Services (Cont'd)

(A) Switched Access Service (Cont'd)

(1) Additional Cooperative Acceptance Testing (Cont'd)

Additional Cooperative Acceptance Testing may, for example, consist of the following tests:

- Impulse Noise
- Phase Jitter
- Signal to C-Notched Noise Ratio
- Intermodulation (Nonlinear) Distortion
- Frequency Shift (Offset)
- Envelope Delay Distortion
- Dial Pulse Percent Break

(2) Additional Automatic Testing

Additional Automatic Testing (AAT) of Switched Access Services (FGD), is a service where the customer provides remote office test lines and 105 test lines with associated responders or their functional equivalent. The customer may order, at additional charges, gain-slope and C-notched noise testing and may order the routine tests (1004 Hz loss, C-Message Noise and Balance) on an as needed or more than routine schedule.

The Additional Tests as set forth following may be ordered by the customer, at additional charges, 60 days prior to the start of the customer prescribed schedule.

Additional Tests - To First Point of Switching	USOC	Path	Rate Per Test Per Transmission
Gain-Slope Tests	UBGx+		$2.82
C-Notched Noise Tests	UBGx+		$2.82
1004 Hz Loss*	UBGx+	$2.82	
C-Messages Noise*	UBGx+		$2.82
Balance (return loss)*	UBGx+	$2.82	

*1004 Hz Loss, C-Message Noise and Balance are non-chargeable routine tests, however they may be required on an as needed or more than routine schedule basis, in which case the charges herein apply.

ACCESS SERVICE

9. Additional Engineering, Additional Labor and Miscellaneous Services (Cont'd)

9.3 Miscellaneous Services (Cont'd)

9.3.2 Testing Services (Cont'd)

(A) Switched Access Service (Cont'd)

(2) Additional Automatic Testing (Cont'd)

The Telephone Company will provide an AAT report that lists the test results for each trunk tested. Trunk test failures requiring customer participation for trouble resolution will be provided to the customer on an as-occurs basis.

(3) Additional Manual Testing

Additional Manual Testing (AMT) of Switched Access Services (FGD and Directory Access Service not routed through an access tandem), where the Telephone Company provides a technician at its office(s) and the Telephone Company or customer provides a technician at the customer designated premises, with suitable test equipment to perform the required tests, will normally consist of gain-slope and C-notched noise testing. However, the Telephone Company will conduct any additional tests which the IC may request.

The Telephone Company will provide an AMT report listing the test results for each trunk tested. Trunk test failures requiring customer participation for trouble resolution will be provided to the customer on a per occurrence basis.

The Additional Tests, Gain-Slope, C-Notched Noise and any other agreed to tests, may be ordered by the customer at additional charges, 60 days prior to the start of the testing schedule as mutually agreed to by the customer and the Telephone Company.

The charges for these Additional Tests can be found in 9.4.2 following.

ACCESS SERVICE

9. Additional Engineering, Additional Labor and Miscellaneous Services (Cont'd)

9.3 Miscellaneous Services (Cont'd)

9.3.2 Testing Services (Cont'd)

(B) Special Access Service

The Telephone Company will provide assistance in per forming specific tests requested by the customer.

When the customer subscribes to Testing Service as set forth in this section, the customer shall make the facilities to be tested available to the Telephone Company at times mutually agreed upon.

(1) Additional Cooperative Acceptance Testing

When a customer provides a technician at its premises or at an end user's premises, with suitable test equipment to perform the requested tests, the Telephone Company will provide a technician at its office for the purpose of conducting Additional Cooperative Acceptance Testing on Voice Grade Services. At the customer's request, the Telephone Company will provide a technician at the customer's premises or at the end user premises. These tests may, for example, consist of the following:

- Attenuation Distortion (i.e., frequency response)
- Intermodulation Distortion (i.e., harmonic distortion)
- Phase Jitter
- Impulse Noise
- Envelope Delay Distortion
- Echo Control
- Frequency Shift

(2) Additional Manual Testing

The Telephone Company will provide a technician at its premises, and the Telephone Company or customer will provide a technician at the customer's designated premises with suitable test equipment to perform the requested tests.

9. Additional Engineering, Additional Labor and Miscellaneous Services (Cont'd)

9.3 Miscellaneous Services (Cont'd)

9.3.3 Provision of Access Service Billing Information

(A) The customer will have the option to receive its cyclic access bill in one of the four formats shown below. Data format conforms to the Bellcore Billing Output Specification (BOS) standards as defined by the Technical Review Group (TRG).

(1) Magnetic Tape Cartridge - bill data tape format

(2) Magnetic Tape Reel - bill data tape format

(3) Microfiche - printed bill format

(4) Paper - printed bill format

(B) At the option of the customer and for an additional charge, additional copies of the customer's cyclic bill may be provided.

ACCESS SERVICE

9. Additional Engineering, Additional Labor and Miscellaneous Services (Cont'd)

9.4 Rates and Charges

The rates following are per each half hour or fraction thereof.

9.4.1 Charges for Additional Engineering

Addition Engineering Periods	USOC	Rate
(A) Basic Time, normally scheduled working hours, per engineer.	AEH	$20.05
(B) Overtime, outside of normally scheduled working hours, per engineer.	AEH	$30.08

9.4.2 Charges for Additional Labor and Miscellaneous Services

	I&R		COE	
Time Periods	USOC	Rate	USOC	Rate
Basic Time, normally scheduled working hours, per technician.				
- Stand by	ALT	$13.45	ALP	$13.37
- Testing and Maint.	ALK	$13.45	ALM	$13.37
Overtime, outside of normally scheduled working hours on a scheduled work day, per technician.				
- Install or Repair	ALH	$20.18*	ALJ	$20.06*
- Stand by	ALT	$20.18*	ALP	$20.06*
- Testing and Maint.	ALK	$20.18*	ALM	$20.06*
Premium Time, outside of scheduled work day, per technician.				
- Install or Repair	ALH	$26.90*	ALJ	$26.74*
- Stand by	ALT	$26.90*	ALP	$26.74*
- Testing and Maint.	ALK	$26.90*	ALM	$26.74*

* A call-out of a Telephone Company employee at a time not coinciding with the employee's scheduled work period is subject to a minimum charge of four hours.

ACCESS SERVICE

9. Additional Engineering, Additional Labor and Miscellaneous Services (Cont'd)

9.4 Rates and Charges (Cont'd)

9.4.2 Charges for Additional Labor and Miscellaneous Services (Cont'd)

The rates following are per each half hour or fraction thereof.

	Cable Tech.		Cable Attndt.	
	USOC	Rate	USOC	Rate
Time Periods				
Basic Time, normally scheduled working hours, per technician.				
- Stand by	ALS	$20.97	ALG	$16.84
- Testing and Maint.	ALC	$20.97	ALQ	$16.84
Overtime, outside of normally scheduled working hours on a scheduled work day, per technician.				
- Install or Repair	ALR	$31.46*	ALD	$25.26*
- Stand by	ALS	$31.46*	ALG	$25.26*
- Testing and Maint.	ALC	$31.46*	ALQ	$25.26*
Premium Time, outside of scheduled work day, per technician.				
- Install or Repair	ALR	$41.94*	ALD	$33.68*
- Stand by	ALS	$41.94*	ALG	$33.68*
- Testing and Maint.	ALC	$41.94*	ALQ	$33.68*

* A call-out of a Telephone Company employee at a time not coinciding with the employee's scheduled work period is subject to a minimum charge of four hours.

ACCESS SERVICE

9. Additional Engineering, Additional Labor and Miscellaneous Services (Cont'd)

9.5 Other Miscellaneous Services

9.5.2 Presubscription

Presubscription is furnished in accordance with the detailed provisions of the Federal Communication Commission's Memorandum Opinion and Order, CC Docket No. 83-1143, Phase I, adopted May 31, 1985, and released June 12, 1985. The Allocation Plan is outlined in Appendix B of this Order and is available for inspection in the Public Reference Room of the Tariff Division at the Federal Communications Commission's Washington D.C. location or may be obtained from the Commission's commercial contractor.

Principal provisions of the allocation plan are as follows:

(A) Presubscription is the process by which end user customers may select and designate to the Telephone Company an IC to access, without an access code, for interLATA, interstate calls. This IC is referred to as the end user's predesignated IC.

ACCESS SERVICE

9. Additional Engineering, Additional Labor and Miscellaneous Services (Cont'd)

9.5 Other Miscellaneous Services (Cont'd)

9.5.2 Presubscription (Cont'd)

(B) End users may select one of the following options at no charge:

- indicate a primary IC for all of its lines
- indicate a different IC for each of its lines

Only one IC may be selected for each line or lines terminating in the same hunt group. End users may designate that they do not want to presubscribe to any IC. The end user must arrange this designation by directly notifying the Telephone Company's business office. This choice will require the end user to dial an access code (10xxx) for all interstate calls.

ACCESS SERVICE

9. Additional Engineering, Additional Labor and Miscellaneous Services (Cont'd)

9.5 Other Miscellaneous Services (Cont'd)

9.5.2 Presubscription (Cont'd)

(C) In the event that two or more ICs have provided to the Telephone Company notifications with the same authorization date(s), and one IC notification has already been processed by the Telephone Company, those IC notifications not yet processed would be returned to the ICs.

New end users who are served by end offices equipped with Feature Group D will be asked to presubscribe to an IC at the time they place an order with the Telephone Company for Telephone Exchange Service. They may select either of the following options. There will be no charge for this initial selection.

- designate a primary IC for all of its lines,
- designate a different IC for each of its lines.

Only one IC may be selected for each individual line, or lines terminating in the same hunt group. Subsequent to the installation of Telephone Exchange Service and after the end user's initial selection of a predesignated IC, for any change in selection, a nonrecurring charge, as set forth in (J) following, applies.

ACCESS SERVICE

9. Additional Engineering, Additional Labor and Miscellaneous Services (Cont'd)

9.5 Other Miscellaneous Services (Cont'd)

9.5.2 Presubscription (Cont'd)

(D) If the new end user fails to designate an IC as its predesignated IC prior to the date of installation of Telephone Exchange Service, the Telephone Company will (1) allocate the end user to an IC based upon current IC presubscription ratios, (2) require the end user to dial an access code (10xxx) for all interstate calls, or (3) block the end user from interstate calling. The end user will be notified which option will be applied if they fail to presubscribe to an IC. An allocated or blocked end user may designate another, or initial, IC as its predesignated IC one time at no charge, if it is requested within six months after the installation of Telephone Exchange Service.

For any change in selection after 6 months from the installation of Telephone Exchange Service, a nonrecurring charge, as set forth in (J) following applies.

(E) If an IC elects to discontinue its Feature Group D Service offering prior to or within 2 years of the conversion, the IC will notify the Telephone Company of the cancellation. The IC will also notify all end users which selected them that they are cancelling their service and that they should contact the Telephone Company to select a new primary IC. The IC will also inform the end user that it will pay the presubscription change charge. The cancelling IC will then be billed by the Telephone Company the appropriate charge for each end user for a period of two years from the discontinuance of Feature Group D service.

9. Additional Engineering, Additional Labor and Miscellaneous Services (Cont'd)

9.5 Other Miscellaneous Services (Cont'd)

9.5.2 Presubscription (Cont'd)

(F) If an IC elects to change or discontinue use of a Carrier Identification Code (CIC) for any reasons other than those set forth in (H) above, the IC will identify to the Telephone Company any affected end users and advise the Telephone Company of the new CIC to be assigned to these end users. If the CIC change involves a change of carrier for any end users, the IC will notify the affected end users of the change. The Telephone Company will change the predesignated carrier code of each end user identified by the IC to the new CIC and bill the IC the nonrecurring charge, as set forth in (J) following, for each end user line or trunk that is changed.

ACCESS SERVICE

9. Additional Engineering, Additional Labor and Miscellaneous Services (Cont'd)

9.5 Other Miscellaneous Services (Cont'd)

9.5.2 Presubscription (Cont'd)

(G) The nonrecurring charge for presubscription is as follows:

Presubscription	InterLATA Only PIC Change Electronic/Manual**	Simultaneous InterLATA and IntraLATA PIC Change* Electronic/Manual**
Per Telephone Exchange Service line or trunk	$1.25/$5.50	$0.63/$2.75

Note: This charge is generally billed to the end user who is the subscriber to the Telephone Exchange Service except as set forth in (H) through (I) preceding and as set forth following. In those instances where the IC both requests the presubscription change, and requests the associated charge be billed to it, the Telephone Company will bill the IC. In the event an end user is incorrectly presubscribed due to misassignment on the part of the Telephone Company, no charge shall apply. If an end user is incorrectly assigned an IC carrier as a result of an error on the IC's part, and the IC is unable to substantiate the assignment with a letter of agency signed by the billed party, the Telephone Company will apply this charge in addition to the nonrecurring unauthorized PIC change charge, as set forth in 9.5.9(B) following, to the IC responsible for the misassignment of the end user. The end user's IC choice will then be processed by the Telephone Company.

9.5.3 Miscellaneous Equipment

(A) Controller Arrangements

This arrangement enables the customer to control up to 48 transfer functions at a Telephone Company central office via a remote keyboard terminal capable of either 300 or 1200 bps operation. Included as part of the Controller Arrangement is a dial-up data station located at the Telephone Company Central Office to provide access to the Controller Arrangement. This dial-up data station consists of a 212A DATAPHONE data set and an appropriate Telephone Company provided channel.

* This charge applies only to the interLATA PIC. The intraLATA PIC will be billed out of the appropriate Intrastate Access Tariff.

** As used above, manual methods are (1) personal interaction between a customer, or a person acting on behalf of a customer, and a Telephone Company employee; and (2) any facsimile or written submissions from a customer, or a person acting on behalf of a customer, to a Telephone Company service center. Electronic methods shall include all other methods. If a request utilizing an electronic method results in manual processing, the electronic nonrecurring charge shall apply upon completion of the request.

ACCESS SERVICE

9. Additional Engineering, Additional Labor and Miscellaneous Services (Cont'd)

9.5 Other Miscellaneous Services (Cont'd)

9.5.3 Miscellaneous Equipment (Cont'd)

(A) Controller Arrangements (Cont'd)

The Controller Arrangement must be located in the same Telephone Company central office as the transfer functions which it controls.

	USOC	Monthly Rate
- per arrangement	XTDDU	$ 91.90

9.5.4 Charges for Miscellaneous Service

Additional copies of the customer's cyclic bill.

		Monthly Rate
(A)	Magnetic Tape Cartridge - per cartridge	$29.5619
(B)	Magnetic Tape Reel - per reel	48.4734
(C)	Microfiche - per page	0.5588
(D)	Paper - per 1,000 printed lines	0.6892

ACCESS SERVICE

9. Additional Engineering, Additional Labor and Miscellaneous Services (Cont'd)

9.5 Other Miscellaneous Services (Cont'd)

9.5.5 Telecommunications Service Priority (TSP) System

(A) Description of the Service

The TSP system is a service that provides for the priority provisioning and/or restoration of National Security Emergency Preparedness (NSEP) Telecommunications services. The TSP system applies only to NSEP services, includes all Access Services and provides the Telephone Company with a guide to the sequence in which services are to be provisioned and/or restored.

All facilities that can be identified by a unique circuit identifier, can be provisioned for TSP service by the Telephone Company.

The minimum period for restoration priority service is one month.

The rates and charges associated with a customer subscribing to TSP service are as specified in Section 9.5.5(G)(1).

(B) Obtaining TSP Service

The Executive Office of the President is empowered with the authority to receive, evaluate and process requests for NSEP TSP services. The executive Office of the President, through the TSP Program office as its administrative branch, makes the priority level assignments and issues the TSP authorization code reflecting the priority assignment associated with a request. The customer initiates the request for TSP service from the TSP Program office through an agency of the federal government. The customer provides the TSP authorization code, in addition to all the other details necessary to complete the order (ASR), and submits to the Telephone Company for appropriate action.

ACCESS SERVICE

9. Additional Engineering, Additional Labor and Miscellaneous Services (Cont'd)

9.5 Other Miscellaneous Services (Cont'd)

9.5.5 Telecommunications Service Priority (TSP) System (Cont'd)

(B) Obtaining TSP Service (Cont'd)

The TSP authorization code, assigned on a per service basis, consists of a 12-character field, a nine-character control ID followed by a dash and a two-character field specifying the priority level assignment. Its structure is as follows:

TSPxxxxxn-yy

The "x"s contain a sequence number unique to each TSP authorization code and the "n" is a one character alpha numeric check digit. The first "y" is the provisioning priority level assignment. The second "y" is the restoration priority level assignment.

(C) Provisioning Priority

If the customer requires service within a shorter time interval than the Telephone Company can provide, and the requested service qualifies for NSEP, the customer may elect to invoke NSEP treatment and obtain the appropriate provisioning priority assignment from the TSP Program office. Accept able assignment code values are: E, 1, 2, 3, 4, 5 or 0.

The assignment of the value "E" implies the service has the most critical provisioning requirements and the Telephone Company will treat accordingly. The Telephone Company will take immediate action to provide the requested service at the earliest possible date. Rates and charges associated with "E" provisioning are as specified in Section 9.2.

The assignment values of 1, 2, 3, 4 and 5 are treated as essential service priorities and the Company will adjust its available resources to meet the customer's requested due date. Rates and charges associated with invoking this priority treatment are specified in Section 9.2. The value "0" implies no provisioning priority.

ACCESS SERVICE

9. Additional Engineering, Additional Labor and Miscellaneous Services (Cont'd)

9.5 Other Miscellaneous Services (Cont'd)

9.5.5 Telecommunications Service Priority (TSP) System (Cont'd)

(D) Restoration Priority

By obtaining a TSP authorization code for restoration priority, the service is classified as being among the nation's most important NSEP telecommunication services. The Company will restore these services before service without restoration priority assignments in the order of priority assignments. Acceptable values are 1, 2, 3, 4, 5 or 0 with the value "1" being the highest priority.

When the Company recognizes a TSP as being out of service, unusable or upon receipt of a trouble report, available resources will be dispatched to restore the service as quickly as practicable. A priority value of 1, 2 or 3 requires dispatch outside normal business hours if necessary to restore the service. A priority value of 4 or 5 only requires dispatch outside of normal business hours if the next business day is more than 24 hours away. If the value "0" has been assigned, then no restoration priority is applicable to this service.

(E) General Customer Obligations

(1) In all instances, the customer is responsible for obtaining the appropriate TSP authorization code and providing that code to the Telephone Company. The code may be submitted verbally and the Telephone Company will accept such verbal notification, however, the customer must submit written confirmation to the Telephone Company within two working days. If written confirmation is not received within two working days, all applicable rates and charges become immediately due and payable and the requested TSP priority is revoked.

(2) The customer for TSP service must be the same customer for the Access Service with which it is associated.

(3) All points of a multipoint service configuration must have the same restoration priority assignment and must satisfy the requirements of that assignment.

ACCESS SERVICE

9. Additional Engineering, Additional Labor and Miscellaneous Services (Cont'd)
9.5 Other Miscellaneous Services (Cont'd)

9.5.5 Telecommunications Service Priority (TSP) System (Cont'd)

(E) General Customer Obligations (Cont'd)

(4) In obtaining TSP service, the customer consents to the release of certain information by the Telephone Company to the TSP Program Office in order to maintain and administer the TSP System. Such information includes: the customer's name, telephone number and mailing address, the TSP authorization code and the circuit or service ID number associated with the TSP service.

(5) When NSEP treatment is invoked, the Telephone Company will first attempt to notify the customer. If the Telephone Company is not able to notify the customer, then the customer recognizes that quoting charges and obtaining permission beforehand will cause unnecessary delays and, as a result, grants the Telephone Company the right to quote charges after provisioning of the service.

(6) The customer must request and justify revalidation of all priority level assignments at least every three years.

(F) General Company Obligations

(1) The Telephone Company will provision and/or restore service having TSP authorization codes before other services, with the exception of official Company services necessary for provisioning and/or restoring the services of the carrier.

(2) The Telephone Company will work TSP services in the order of their priority level assignments. The priority sequence is as follows:

- Restore TSP services assigned restoration priority 1
- Provision Emergency (E) TSP services
- Restore TSP services assigned restoration priority 2, 3, 4 or 5.
- Provision TSP services assigned provisioning priority 1, 2, 3, 4 or 5.

ACCESS SERVICE

9. Additional Engineering, Additional Labor and Miscellaneous Services (Cont'd)

9.5 Other Miscellaneous Services (Cont'd)

9.5.5 Telecommunications Service Priority (TSP) System (Cont'd)

(F) General Company Obligations (Cont'd)

(3) Work cooperatively with other providers of NSEP service when only a portion is provided by the Telephone Company to ensure "end-to-end" service.

(G) Rates and Charges

The following rates and charges are in addition to all other rates and charges that may apply for other services offered under this tariff which operate in conjunction with the TSP System.

(1) Establishment of TSP Service

The nonrecurring charge (NRC) specified below applies when Access Service is ordered with provisioning and/or restoration priority. If both are ordered at the same time, only one NRC is applicable. The specified NRC is also applicable for orders specifying priority changes. The monthly rate is associated with only the administration and maintenance of the TSP System for restoration priority service.

	Monthly Rate	Nonrecurring Charge
TSP Services, Per Circuit	0.00	$78.28

(2) Priority Provisioning

There are two basic levels of priority provisioning, Emergency (provisioning priority "E") and Essential (provisioning priority 1, 2, 3, 4 or 5).

(a) Emergency provisioning. The Telephone Company will take immediate action to provide the requested service at the earliest possible date. The rates and charges will apply as set forth in Section 9.2.

ACCESS SERVICE

9. Additional Engineering, Additional Labor and Miscellaneous Services (Cont'd)

9.5 Other Miscellaneous Services (Cont'd)

9.5.5 Telecommunications Service Priority (TSP) System (Cont'd)

(G) Rates and Charges (Cont'd)

(2) Priority Provisioning (Cont'd)

(b) Essential provisioning. The Telephone Company will adjust its available resources to meet the customers requested due date. The rates and charges will apply as set forth in Section 9.2, Additional Labor. To calculate the Additional Labor charges, the Telephone Company will keep track of the additional labor hours used to meet the request of the customer and bill the customer at the applicable Additional Labor charges.

ACCESS SERVICE

9. Additional Engineering, Additional Labor and Miscellaneous Services (Cont'd)

9.5 Other Miscellaneous Services (Cont'd)

9.5.6 International Blocking Service

International Blocking Service is offered by the Telephone Company to subscribers of Telephone Exchange Service. International Blocking Service provides end office blocking of international direct-dialed sequences (011+ and 101XXXX-011+), by routing such calls to a recorded announcement.

The offering of International Blocking Service under this section of the tariff is subject to the capability of the end office switching equipment.

International Blocking Service offered under this section of the tariff is optional and subject to the charges as set forth in (A) following.

(A) The nonrecurring charge for International Blocking Service is as follows:

International Blocking Service	Nonrecurring Charge
- Per Telephone Exchange Service line or trunk	$30.27

Note: This charge is billed to the end user who is the subscriber to the Telephone Exchange Service.

ACCESS SERVICE

9. Additional Engineering, Additional Labor and Miscellaneous Services (Cont'd)

9.5 Other Miscellaneous Services (Cont'd)

9.5.7 900 Blocking Service

The Telephone Company will provide 900 Blocking Service to customers who obtain local exchange service from the Telephone Company under its general or local exchange tariffs. This service is only provided at appropriately equipped end offices. Those offices providing 900 Blocking Service are identified in NATIONAL EXCHANGE CARRIER ASSOCIATION, INC. TARIFF F.C.C. NO. 4.

On each line or trunk for which 900 Blocking Service is ordered, the Telephone Company will block all direct dialed calls placed to a 900 number. When capable, the Telephone Company will route the blocked calls to a recorded message.

A 900 Blocking Service charge as set forth in (A) following is applicable when ordered by the end user customer with the following exceptions:

- 900 Blocking Service will be provided at no charge on a one-time basis to all customers of both existing and new local exchange service.

- Customers with 900 Blocking Service who move to a new location will receive 900 Blocking Service at their new location at no charge.

The Blocking Service charge is applied for each line, trunk to which 900 Blocking Service is removed or subsequently added. Requests by subscribers to remove 900 Blocking Service must be in writing. This charge does not apply when blocking is removed from an exchange line or trunk at the same time that it is disconnected.

(A) 900 Blocking Service	Nonrecurring Charge
- Per change in Blocking	$12.82

ACCESS SERVICE

9. Additional Engineering, Additional Labor and Miscellaneous Services (Cont'd)

9.5 Other Miscellaneous Services (Cont'd)

9.5.8 Verification of Orders for Long Distance Telemarketing

No IC shall submit to the Telephone Company a Primary Interexchange Carrier (PIC) change order generated by telemarketing unless and until the order has first been confirmed in accordance with one of the following procedures:

(A) The IC has obtained the billed party's written authorization in a form that meets the Letter of Agency (LOA) form and content requirements that follow:

(1) An IC shall obtain any necessary written authorization from a billed party for a PIC change by using a LOA as specified in this section. Any LOA that does not conform with this section is invalid.

(2) The LOA shall be a separate document (an easily separable document containing only the authorizing language as set forth in (5) following) whose sole purpose is to authorize an IC to initiate a PIC change. The LOA must be signed and dated by the billed party to the telephone line(s) requesting the PIC change.

(3) The LOA shall not be combined with inducements of any kind on the same document.

(4) Notwithstanding (2) and (3) preceding, the LOA may be combined with checks that contain only the required LOA language as set forth in (5) following and the necessary information to make the check a negotiable instrument. The LOA check shall not contain any promotional language or material. The LOA check shall contain in easily readable, bold-face type on the front of the check, a notice that the billed party is authorizing a PIC change by signing the check. The LOA language also shall be placed near the signature line on the back of the check.

ACCESS SERVICE

9. Additional Engineering, Additional Labor and Miscellaneous Services (Cont'd)

9.5 Other Miscellaneous Services (Cont'd)

9.5.8 Verification of Orders for Long Distance Telemarketing (Cont'd)

(A) (Cont'd)

(5) At a minimum, the LOA must be printed with a type of sufficient size and readable type to be clearly legible and must contain clear and unambiguous language that confirms:

(a) The billed party's billing name and address and each telephone number to be covered by the PIC change order;

(b) The billed party's decision to change the PIC from their current IC to the prospective IC;

(c) That the billed party designates the IC to act as the billed party's agent for the PIC change;

(d) That the billed party understands that only one IC may be designated as the billed party's interstate PIC for any one telephone number. To the extent that a jurisdiction allows additional PIC's (e.g., for intrastate or international calling), the LOA must contain separate statements regarding those choices. Any carrier designated as a PIC must be the carrier directly setting the rates for the billed party. One IC can be both a billed party's interstate PIC and a billed party's intrastate PIC; and

(e) That the billed party understands that any PIC selection the billed party chooses may involve a charge to the billed party for changing the billed party's PIC.

(6) The LOA shall not suggest or require that a billed party take some action in order to retain the billed party's current IC.

(7) If any portion of the LOA is translated into another language, then all portions of the LOA must be translated into that language; or

ACCESS SERVICE

9. Additional Engineering, Additional Labor and Miscellaneous Services (Cont'd)

9.5 Other Miscellaneous Services (Cont'd)

9.5.8 Verification of Orders for Long Distance Telemarketing (Cont'd)

(B) The IC has obtained the billed party's electronic authorization, placed from the telephone number(s) on which the PIC is to be changed, to submit the order that confirms the information described in (A) preceding to confirm the authorization. IC's electing to confirm sales electronically shall establish one or more toll-free telephone numbers exclusively for that purpose. Calls to the number(s) will connect a billed party to a voice response unit, or similar mechanism, that records the required information regarding the PIC change, including automatically recording the originating Automatic Number Identification (ANI); or

(C) An appropriately qualified and independent third party operating in a location physically separate from the telemarketing representative has obtained the billed party's oral authorization to submit the PIC change order that confirms and includes appropriate verification data (e.g., the billed party's date of birth or social security number); or

(D) Within three business days of the billed party's request for a PIC change, the IC must send the billed party an information package by first class mail containing at least the following information concerning the requested change:

(1) The information is being sent to confirm a telemarketing order placed by the billed party within the previous week;

(2) The name of the billed party's current IC;

(3) The name of the newly requested IC;

(4) A description of any terms, conditions, or charges that will be incurred;

ACCESS SERVICE

9. Additional Engineering, Additional Labor and Miscellaneous Services (Cont'd)

9.5 Other Miscellaneous Services (Cont'd)

9.5.8 Verification of Orders for Long Distance Telemarketing (Cont'd)

(D) (Cont'd)

(5) The name of the billed party ordering the change;

(6) The name, address, and telephone number of both the billed party and the soliciting IC;

(7) A postpaid postcard which the billed party can use to deny, cancel or confirm a service order;

(8) A clear statement that if the billed party does not return the postcard the billed party's long distance service will be switched within 14 days after the date the information package was mailed to [name of soliciting carrier];

(9) The name, address, and telephone number of a contact point at the Commission for consumer complaints; and

(10) The IC must wait 14 days after the form is mailed to billed parties before submitting their PIC change orders to the Telephone Company. If billed parties have cancelled their orders during the waiting period, IC's, of course, cannot submit the billed party's orders to the Telephone Company.

ACCESS SERVICE

9. Additional Engineering, Additional Labor and Miscellaneous Services (Cont'd)

9.5 Other Miscellaneous Services (Cont'd)

9.5.9 Unauthorized PIC Change

(A) If an IC requests a Primary Interexchange Carrier (PIC) change on behalf of a billed party (e.g., an end user or the designator of the PIC for a pay telephone), and the billed party subsequently denies requesting the change, and the IC is unable to substantiate the change with a letter of agency signed by the billed party; then:

- The billed party will be reassigned to its previously selected IC. No charge will apply to the billed party for this reassignment.

- The nonrecurring PIC Change Charge, as set forth in (B) following, applies to the IC that requested the unauthorized PIC change. This charge is applied in addition to the nonrecurring Presubscription charge, as set forth in 9.5.2(J) preceding.

(B) The nonrecurring charge for unauthorized PIC change is as follows:

Unauthorized PIC Change	Nonrecurring Charge
- Per Telephone Exchange Service line or trunk	$ 50.00

ACCESS SERVICE

10. Interface Groups, Transmission Specifications and Channel Interfaces

10.1 Local Transport Interface Groups

Interface Group 1 is provided with Type C Transmission Specifications, and Interface Groups 2 through 10 are provided with Type A or B Transmission Specifications, depending on the Feature Group and whether the Access Service is routed directly or through an access tandem. All Interface Groups are provided with Data Transmission Parameters.

Only certain premises interfaces are available at the customer designated premises. The premises interfaces associated with the Interface Groups may vary among Feature Groups. The various premises interfaces which are available with the Interface Groups, and the Feature Groups with which they may be used, are set forth in 10.1.1 following:

10.1.1 Interface Group 1

Interface Group 1, except as set forth in the following, provides two-wire voice frequency transmission at the point of termination at the customer's premises. The interface is capable of transmission of voice and associated telephone signals within the frequency bandwidth of approximately 300 to 3000 Hz.

Interface Group 1 is not provided in association with FGD when the first point of switching is an access tandem. In addition, Interface Group 1 is not provided in association with FGD when the first point of switching provides only four-wire terminations.

The transmission path between the point of termination at the customer designated premises and the customer's serving wire center may be comprised of any form or configuration of plant capable of and typically used in the telecommunications industry for the transmission of voice and associated telephone signals within the frequency bandwidth of 300 to 3000 Hz.

The interface is provided with loop supervisory signaling. When the interface is associated with FGD, such signaling, except for two-way calling which is E & M signaling, will be reverse battery signaling.

ACCESS SERVICE

10. Interface Groups, Transmission Specifications and Channel Interfaces (Cont'd)

10.1 Local Transport Interface Groups (Cont'd)

10.1.2 Interface Group 2

Interface Group 2 provides four-wire voice frequency transmission at the point of termination at the customer designated premises. The interface is capable of transmission of voice and associated telephone signals within the frequency bandwidth of approximately 300 to 3000 Hz.

The transmission path between the point of termination at the customer designated premises and the customer's serving wire center may be comprised of any form or configuration of plant capable of and typically used in the telecommunications industry for the transmission of voice and associated telephone signals within the frequency bandwidth of approximately 300 to 3000 Hz.

The interface is provided with loop supervisory signaling. When the interface is associated with FGD, such signaling, except for two-way calling which is E&M signaling, will be reverse battery signaling.

10.1.3 Interface Group 3

Interface Group 3 provides group level analog transmission at the point of termination at the customer designated premises. The interface is capable of transmitting electrical signals between the frequencies of 60 to 108 kHz, with the capability to channelize up to 12 voice frequency transmission paths. Certain frequencies within the bandwidth of the Interface Group are reserved for Telephone Company use, e.g., pilot and carrier group alert tones. Before the first point of switching, the Telephone Company will provide multiplex equipment to derive 12 transmission paths of frequency bandwidth of approximately 300 to 3000 Hz.

The interface is provided with individual transmission path SF supervisory signaling.

ACCESS SERVICE

10. Interface Groups, Transmission Specifications and Channel Interfaces (Cont'd)

10.1 Local Transport Interface Groups (Cont'd)

10.1.4 Interface Group 4

Interface Group 4 provides supergroup level analog transmission at the point of termination at the customer designated premises. The interface is capable of transmitting electrical signals between the frequencies of 312 to 552 kHz, with the capability to channelize up to 60 voice frequency transmission paths. Certain frequencies within the bandwidth of the Interface Group are reserved for Telephone Company use, e.g., pilot and carrier group alarm tones. Before the first point of switching, the Telephone Company will provide multiplex and channel bank equipment to derive 60 transmission paths of frequency bandwidth of approximately 300 to 3000 Hz.

The interface is provided with individual transmission path SF supervisory signaling.

10.1.5 Interface Group 5

Interface Group 5 provides mastergroup level analog transmission at the point of termination at the customer designated premises. The interface is capable of transmitting electrical signals between the frequencies of 564 to 3084 kHz, wit the capability to channelize up to 600 voice frequency transmission paths. Certain frequencies within the bandwidth of the Interface Group are reserved for Telephone Company use, e.g., pilot and carrier group alarm tones. Before the first point of switching, the Telephone Company will provide multiplex and channel bank equipment to derive 600 transmission paths of frequency bandwidth of approximately 300 to 3000 Hz.

The interface is provided with individual transmission path SF supervisor signaling.

10.1.6 Interface Group 6

Interface Group 6 provides DS1 level digital transmission at the point of termination at the customer designated premises. The interface is capable of transmitting electrical signals at a nominal 1.544

ACCESS SERVICE

10. Interface Groups, Transmission Specifications and Channel Interfaces (Cont'd)

10.1 Local Transport Interface Groups (Cont'd)

10.1.6 Interface Group 6 (Cont'd)

Mbps, with the capability to channelize up to 24 voice frequency transmission paths. Before the first point of switching, when analog switching utilizing analog terminations are provided, the Telephone Company will provide multiplex and channel bank equipment to derive 24 transmission paths of a frequency bandwidth of approximately 300 to 3000 Hz. When digital switching or analog switching with digital carrier terminations is provided, the Telephone Company will provide a DS1 signal in D3/D4 format.

The interface is provided with individual transmission path bit stream supervisory signaling.

10.1.7 Interface Group 7

Interface Group 7 provides DS1C level digital transmission at the point of termination at the customer designated premises. The interface is capable of transmitting electrical signals at a nominal 3.152 Mbps, with the capability to channelize up to 48 voice frequency transmission paths. Before the first point of switching, when analog switching utilizing analog terminations is provided, the Telephone Company will provide multiplex and channel bank equipment to derive up to 48 voice frequency transmission paths of a frequency bandwidth of approximately 300 to 3000 Hz. When digital switching or analog switching with digital carrier terminations is provided, the Telephone Company will provide DS1 signals in D3/D4 format.

The interface is provided with individual transmission path bit stream supervisor signaling.

10.1.8 Interface Group 8

Interface Group 8 provides DS2 level digital transmission at the point of termination at the customer designated premises. The interface is capable of transmitting electrical signals at a nominal 6.312 Mbps, with the capability to channelize up to

ACCESS SERVICE

10. Interface Groups, Transmission Specifications and Channel Interfaces (Cont'd)

10.1 Local Transport Interface Groups (Cont'd)

10.1.8 Interface Group 8 (Cont'd)

96 voice frequency transmission paths. Before the first point of switching, when analog switching utilizing analog terminations are provided, the Telephone Company will provide multiplex and channel bank equipment in its office to derive up to 96 transmission paths of a frequency bandwidth of approximately 300 to 3000 Hz. When digital switching, or analog switching with digital carrier terminations is provided, the Telephone Company will provide a DS1 signal in D3/D4 format.

The interface is provided with individual transmission path bit stream supervisory signaling.

10.1.9 Interface Group 9

Interface Group 9 provides DS3 level digital transmission at the point of termination at the customer designated premises. The interface is capable of transmitting electrical signals at a nominal 44.736 Mbps, with the capability to channelize up to 672 voice frequency transmission paths. Before the first point of switching, when analog switching utilizing analog terminations is provided, the Telephone Company will provide multiplex and channel bank equipment to derive up to 672 transmission paths of a frequency bandwidth of approximately 300 to 3000 Hz. When digital switching, or analog switching with digital carrier terminations is provided, the Telephone Company will provide DS1 signals in D3/D4 format.

The interface is provided with individual transmission path bit stream supervisor signaling.

ACCESS SERVICE

10. Interface Groups, Transmission Specifications and Channel Interfaces (Cont'd)

10.1 Local Transport Interface Groups (Cont'd)

10.1.10 Interface Group 10

Interface Group 10 provides DS4 level digital transmission at the point of termination at the customer designated premises. The interface is capable of transmitting electrical signals at a nominal 274.176 Mbps, with the capability to channelize up to 4032 voice frequency transmission paths. Before the first point of switching, when analog switching utilizing analog terminations is provided, the Telephone Company will provide multiplex and channel bank equipment to derive up to 4032 transmission paths of a frequency bandwidth of approximately 300 to 3000 Hz. When digital switching, or analog switching with digital carrier terminations is provided, the Telephone Company will provide DS1 signals in D3/D4 format. The interface is provided with individual transmission path bit stream supervisor signaling.

10.1.11 Available Premises Interface Codes

Following is a matrix showing, for each Interface Group, which premises interface codes are available as a function of the Telephone Company switch supervisory signaling and Feature Group. For explanation of these codes, see the Glossary of Channel Interface Codes in 10.3 following.

ACCESS SERVICE

10. Interface Groups, Transmission Specifications and Channel Interfaces (Cont'd)

10.1 Local Transport Interface Groups (Cont'd)

10.1.11 Available Premises Interface Codes (Cont'd)

Interface Group	Telephone Company Switch Supervisory Signaling	Premises Interface Code	Feature Group A	B	C	D
1	LO	2LS2	X			
	LO	2LS3	X			
	GO	2GS2	X			
	GO	2GS3	X			
	LO, GO,	2DX3	X			
	LO, GO,	4EA3-E	X			
	LO, GO	4EA3-M	X			
	LO, GO	6EB3-E	X			
	LO, GO	6EB3-M	X			
	RV, EA, EB, EC	2DX3		X	X	X
	RV, EA, EB, EC	4EA3-E		X	X	X
	RV, EA, EB, EC	4EA3-M		X	X	X
	RV, EA, EB, EC	6EB3-E		X	X	X
	RV, EA, EB, EC	6EB3-M		X	X	X
	EA, EB, EC	6EC3			X	X
	RV	2RV3-0		X	X	X
	RV	2RV3-T		X	X	X
	SS7	2N02			X	X
2	LO, GO	4SF2	X			
	LO, GO	4SF3	X			
	LO	4LS2	X			
	LO	4LS3	X			
	LO	6LS2	X			
	GO	4GS2	X			
	GO	4GS3	X			
	GO	6GS2	X			
	LO, GO	4DX2	X			
	LO, GO	4DX3	X			
	LO, GO	6EA2-E	X			
	LO, GO	6EA2-M	X			
	LO, GO	8EB2-E	X			
	LO, GO	8EB2-M	X			
	LO, GO	6EX2-B	X			

ACCESS SERVICE

10. Interface Groups, Transmission Specifications and Channel Interfaces (Cont'd)

10.1 Local Transport Interface Groups (Cont'd)

10.1.11 Available Premises Interface Codes (Cont'd)

Interface Group (Cont'd)	Telephone Company Switch Supervisory Signaling	Premises Interface Code	Feature Group A	B	C	D
2	RV, EA, EB, EC	4SF2		X	X	X
	RV, EA, EB, EC	4SF3		X		
	RV, EA, EB, EC	4DX2		X	X	X
	RV, EA, EB, EC	4DX3		X		
	RV, EA, EB, EC	6DX2			X	
	RV, EA, EB, EC	6EA2-E		X	X	X
	RV, EA, EB, EC	6EA2-M		X	X	X
	RV, EA, EB, EC	8EB2-E		X	X	X
	RV, EA, EB, EC	8EB2-M		X	X	X
	EA, EB, EC	8EC2-M			X	X
	RV	4RV2-O		X	X	X
	RV	4RV2-T		X	X	X
	RV	4RV3-O		X	X	
	RV	4RV3-T		X	X	
	SS7	4N02			X	X
3	LO, GO	4AH5-B	X			
	RV, EA, EB, EC	4AH5-B		X	X	X
	SS7	4AH5-B			X	X
4	LO, GO	4AH6-C	X			
	RV, EA, EB, EC	4AH6-C		X	X	X
	SS7	4AH6-C			X	X
5	LO, GO	4AH6-D	X			
	RV, EA, EB, EC	4AH6-D		X	X	X
	SS7	4AH6-D			X	X
6	LO, GO	4DS9-15	X			
	LO, GO	4DS9-15L	X			
	RV, EA, EB, EC	4DS9-15		X	X	X
	RV, EA, EB, EC	4DS9-15L		X	X	X
	SS7	4DS9-15			X	X
7	LO, GO	4DS9-31	X			
	RV, EA, EB, EC	4DS9-31		X	X	X
	LO, GO	4DS9-31L	X			
	RV, EA, EB, EC	4DS9-31L		X	X	X
	SS7	4DS9-31			X	X

ACCESS SERVICE

10. Interface Groups, Transmission Specifications and Channel Interfaces (Cont'd)

10.1 Local Transport Interface Groups (Cont'd)

10.1.11 Available Premises Interface Codes (Cont'd)

Interface Group	Telephone Company Switch Supervisory Signaling	Premises Interface Code	Feature Group A	B	C	D
8	LO, GO	4DS0-63	X			
	LO, GO	4DS0-63L	X			
	RV, EA, EB, EC	4DS0-63		X	X	X
	RV, EA, EB, EC	4DS0-63L		X	X	X
	SS7	4DS0-63			X	X
9	LO, GO	4DS6-44	X			
	LO, GO	4DS6-44L	X			
	RV, EA, EB, EC	4DS6-44		X	X	X
	RV, EA, EB, EC	4DS6-44L		X	X	X
	SS7	4DS6-44			X	X
10	LO, GO	4DS6-27	X			
	LO, GO	4DS6-27L	X			
	RV, EA, EB, EC	4DS6-27		X	X	X
	RV, EA, EB, EC	4DS6-27L		X	X	X
	SS7	4DS6-27			X	X

10.1.12 Supervisory Signaling

- For Interface Groups 1 and 2

  DX Supervisory Signaling, E&M Type I Supervisory Signaling, E&M Type II Supervisory Signaling, or E&M Type III Supervisory Signaling

- For Interface Group 2

  SF Supervisory Signaling, or
  Tandem Supervisory Signaling

- For Interface Groups 3 through 5
  Optional Supervisory Signaling Not Available

- For Interface Groups 6 through 10

  These Interface Groups may, at the option of the customer, be provided with individual transmission path SF supervisory signaling where such signaling is available in Telephone Company central offices. Generally such signaling is available only where the entry switch provides an analog, i.e., nondigital, interface to the transport termination.

10. Interface Groups, Transmission Specifications and Channel Interfaces (Cont'd)

10.2 Transmission Specifications Switched Access Service

10.2.1 Standard Transmission Specifications

Following are descriptions of the three Standard Transmission Specifications available with Switched Access Service Feature Groups. The specific applications in terms of the Feature Groups and Interface Groups with which the Feature Group Standard Transmission Specifications are provided are set forth in 6.2.1(C), 6.2.2(C), 6.2.3(C) and 6.2.4(C) preceding.

(A) Type A Transmission Specifications

Type A Transmission Specifications is provided with the following parameters:

(1) Loss Deviation

The maximum Loss Deviation of the 1004 Hz loss relative to the Expected Measured Loss (EML) is ± 2.0 dB.

(2) Attenuation Distortion

The maximum Attenuation Distortion in the 404 to 2804 Hz frequency band relative to the loss of 1004 Hz is -1.0 dB to +3.0 dB.

(3) C-Message Noise

The maximum C-Message Noise for the transmission path at the route miles listed is less than or equal to:

Route Miles	C-Message Noise
Less than 50	32 dBrnCO
51 to 100	34 dBrnCO
101 to 200	37 dBrnCO
201 to 400	40 dBrnCO
401 to 1000	42 dBrnCO

ACCESS SERVICE

10. Interface Groups, Transmission Specifications and Channel Interfaces (Cont'd)

10.2 Transmission Specifications Switched Access Service (Cont'd)

10.2.1 Standard Transmission Specifications (Cont'd)

(A) Type A Transmission Specifications (Cont'd)

(4) C-Notch Noise

The maximum C-Notch Noise, utilizing a -16 dBmO holding tone, is less than or equal to 45 dBrnCO.

(5) Echo Control

Echo Control, identified as Equal Level Echo Path Loss, and expressed as Echo Return Loss and Singing Return Loss, is dependent on the routing, i.e., whether the service is routed directly from the customer's point of termination (POT) to the end office or via an access tandem. It is equal to or greater than the following:

	Echo Return Loss	Singing Return Loss
POT to Access Tandem	21 dB	14 dB
POT to End Office		
- Direct	N/A	N/A
- Via Access Tandem	16 dB	11 dB

(6) Standard Return Loss

Standard Return Loss expressed as Echo Return Loss and Singing Return Loss on two-wire ports of a four-wire point of termination shall be equal to or greater than:

Echo Return Loss	Singing Return Loss
5 dB	2.5 dB

(B) Type B Transmission Specifications

Type B Transmission Specifications are provided with the following parameters:

ACCESS SERVICE

10. Interface Groups, Transmission Specifications and Channel Interfaces (Cont'd)

10.2 Transmission Specifications Switched Access Service (Cont'd)

10.2.1 Standard Transmission Specifications (Cont'd)

(B) Type B Transmission Specifications (Cont'd)

(1) Loss Deviation

The maximum Loss Deviation of the 1004 Hz loss relative to the Expected Measured Loss (EML) is ± 2.5 dB.

(2) Attenuation Distortion

The maximum Attenuation Distortion in the 404 to 2804 Hz frequency band relative to loss at 1004 Hz is -2.0 dB to +4.0 dB.

(3) C-Message Noise

The maximum C-Message Noise for the transmission path at the route miles listed is less than or equal to:

Route Miles	C-Message Noise* Type B1	Type B2
Less than 50	32 dBrnCO	35 dBrnCO
51 to 100	33 dBrnCO	37 dBrnCO
101 to 200	35 dBrnCO	40 dBrnCO
201 to 400	37 dBrnCO	43 dBrnCO
401 to 1000	39 dBrnCO	45 dBrnCO

(4) C-Notch Noise

The maximum C-Notch Noise, utilizing a -16 dBmO holding tone is less than or equal to 47 dBrnCO.

*For Feature Group D only Type B2 will be provided.

ACCESS SERVICE

10. Interface Groups, Transmission Specifications and Channel Interfaces (Cont'd)

10.2 Transmission Specifications Switched Access Service (Cont'd)

10.2.1 Standard Transmission Specifications (Cont'd)

(B) Type B Transmission Specifications (Cont'd)

(5) Echo Control

Echo Control, identified as Equal Level Echo Path Loss for FGD, and expressed as Echo Return Loss (ERL) and Singing Return Loss (SRL), is dependent on the routing, i.e., whether the service is routed directly from the customer's point of termination (POT) to the end office or via an access tandem. The ERL and SRL also differ by Feature Group, type of termination, and type of transmission path. They are greater than or equal to the following:

	Echo Return Loss	Singing Return Loss
POT to Access Tandem		
- Terminated in 4-Wire trunk	21 dB	14 dB
- Terminated in 2-Wire trunk	16 dB	11 dB
POT to End Office		
- Direct	16 dB	11 dB
- Via Access Tandem		
. For FGB access	8 dB	4 dB
. For FGC access (Effective 4-Wire transmission path at end office)	16 dB	11 dB
. For FGC access (Effective 2-Wire transmission path at end office)	13 dB	6 dB

10. Interface Groups, Transmission Specifications and Channel Interfaces (Cont'd)

10.2 Transmission Specifications Switched Access Service (Cont'd)

10.2.1 Standard Transmission Specifications (Cont'd)

(B) Type B Transmission Specifications (Cont'd)

(6) Standard Return Loss

Standard Return Loss, expressed as Echo Return Loss and Singing Return Loss, on two-wire ports of a four-wire point of termination shall be equal to or greater than:

Echo Return Loss	Singing Return Loss
5 dB	2.5 dB

(C) Type C Transmission Specifications

Type C Transmission Specifications are provided with the following parameters:

(1) Loss Deviation

The maximum Loss Deviation of the 1004 Hz loss relative to the Expected Measured Loss (EML) is ± 3.0 dB.

(2) Attenuation Distortion

The maximum Attenuation Distortion in the 404 to 2804 Hz frequency band relative to loss at 1004 Hz is -2.0 dB to +5.5 dB.

(3) C-Message Noise

The maximum C-Message Noise for the transmission path at the route miles listed is less than or equal to:

ACCESS SERVICE

10. Interface Groups, Transmission Specifications and Channel Interfaces (Cont'd)

10.2 Transmission Specifications Switched Access Service (Cont'd)

10.2.1 Standard Transmission Specifications (Cont'd)

(C) Type C Transmission Specifications (Cont'd)

Route Miles	C-Message Noise* Type C1	Type C2
Less than 50	32 dBrnCO	38 dBrnCO
51 to 100	33 dBrnCO	39 dBrnCO
101 to 200	35 dBrnCO	41 dBrnCO
201 to 400	37 dBrnCO	43 dBrnCO
401 to 1000	39 dBrnCO	45 dBrnCO

(4) C-Notch Noise

The maximum C-Notch Noise, utilizing a -16 dBmO holding tone is less than or equal to 47 dBrnCO.

(5) Echo Control

Echo Control, identified as Return Loss and expressed as Echo Return Loss and Singing Return Loss is dependent on the routing, i.e., whether the service is routed directly from the customer's point of termination (POT) to the end office or via an access tandem. It is equal to or greater than the following:

	Echo Return Loss	Singing Return Loss
POT to Access Tandem	13 dB	6 dB
POT to End Office - Direct	13 dB	6 dB

*For Feature Group D only Type C2 will be provided.

ACCESS SERVICE

10. Interface Groups, Transmission Specifications and Channel Interfaces (Cont'd)

10.2 Transmission Specifications Switched Access Service (Cont'd)

10.2.2 Data Transmission Parameters

Two types of Data Transmission Parameters, i.e., Type DA and Type DB, are provided for the Feature Group arrangements. The specific applications in terms of the Feature Groups with which they are provided are set forth in 6.2.1(C), preceding. Following are descriptions of each.

(A) Data Transmission Parameters Type DA

(1) Signal to C-Notched Noise Ratio

The Signal to C-Notched Noise Ratio is equal to or greater than 33 dB.

(2) Envelope Delay Distortion

The maximum Envelope Delay Distortion for the frequency bands and route miles specified is:

	604 to 2804 Hz
less than 50 route miles	500 microseconds
equal to or greater than 50 route miles	900 microseconds

	1004 to 2404 Hz
less than 50 route miles	200 microseconds
equal to or greater than 50 route miles	400 microseconds

(3) Impulse Noise Counts

The Impulse Noise Counts exceeding a 65 dBrnCO threshold in 15 minutes is no more than 15 counts.

(4) Intermodulation Distortion

The Second Order (R2) and Third Order (R3) Intermodulation Distortion products are equal to or greater than:

Second Order (R2)	33 dB
Third Order (R3)	37 dB

ACCESS SERVICE

10. Interface Groups, Transmission Specifications and Channel Interfaces (Cont'd)

10.2 Transmission Specifications Switched Access Service (Cont'd)

10.2.2 Data Transmission Parameters (Cont'd)

(A) Data Transmission Parameters Type DA (Cont'd)

(5) Phase Jitter

The Phase Jitter over the 4-300 Hz frequency band is less than or equal to 5? peak-to-peak.

(6) Frequency Shift

The maximum Frequency Shift does not exceed -2 to +2 Hz.

(B) Data Transmission Parameters Type DB

(1) Signal to C-Notched Noise Ratio

The signal to C-Notched Noise Ratio is equal to or greater than 30 dB.

(2) Envelope Delay Distortion

The maximum Envelope Delay Distortion for the frequency bands and route miles specified is:

	604 to 2804 Hz
less than 50 route miles	800 microseconds equal to
or greater than 50 route miles	1000 microseconds

	1004 to 2404 Hz
less than 50 route miles	320 microseconds equal to
or greater than 50 route miles	500 microseconds

(3) Impulse Noise Counts

The Impulse Noise Counts exceeding a 67 dBrnCO threshold in 15 minutes is no more than 15 counts.

ACCESS SERVICE

10. Interface Groups, Transmission Specifications and Channel Interfaces (Cont'd)

10.2 Transmission Specifications Switched Access Service (Cont'd)

10.2.2 Data Transmission Parameters (Cont'd)

(B) Data Transmission Parameters Type DB (Cont'd)

(4) Intermodulation Distortion

The Second Order (R2) and Third Order (R3) Intermodulation Distortion products are equal to or greater than:

Second Order (R2)	31 dB
Third Order (R3)	34 dB

(5) Phase Jitter

The Phase Jitter over the 4-300 Hz frequency band is less than or equal to 7? peak-to-peak.

(6) Frequency Shift

The maximum Frequency Shift does not exceed -2 to +2 Hz.

ACCESS SERVICE

10. Interface Groups, Transmission Specifications and Channel Interfaces (Cont'd)

10.3 Special Access Channel Interface and Network Channel Codes

This section explains the Channel Interface codes and Network Channel codes that the customer must specify when ordering Special Access Service, Switched Access Entrance Facilities, and Voice Grade and High Capacity Direct-Trunked Transport. Included is an example which explains the specific characters of the code, a glossary of Channel Interface codes, impedance levels, Network Channel codes and compatible Channel Interfaces.

Example: If the customer specifies an NT Network Channel Code and a 2DC8-3 Channel Interface at the customer's premises, the following is being requested:

NT = Metallic Channel with a Predefined Technical Specification Package (1)
2 = Number of physical wires at customer premises
DC = Facility interface for direct current or voltage
8 = Variable impedance level
3 = Metallic facilities (DC continuity) for direct current/low frequency control signals or slow speed data (30 baud)

10.3.1 Glossary of Channel Interface Codes and Options

Code	Option	Definition
AB -		accepts 20 Hz ringing signal at customer's point of termination
AC -		accepts 20 Hz ringing signal at customer's end user's point of termination
CT -		Centrex Tie Trunk Termination
DA -		data stream in VF frequency band at customer's end user's point of termination
DB -		data stream in VF frequency band at customer's point of termination
	- 10	VF for TG1 and TG2
	- 43	VF for 43 Telegraph Carrier type signals, TG1 and TG2
DC -		direct current or voltage
	- 1	monitoring interface with series RC combination (McCulloh format)
	- 2	Telephone Company energized alarm channel
	- 3	Metallic facilities (DC continuity) for direct current/low frequency control signals or slow speed data (30 baud)

ACCESS SERVICE

10. Interface Groups, Transmission Specifications and Channel Interfaces (Cont'd)

10.3 Special Access Channel Interface and Network Channel Codes (Cont'd)

10.3.1 Glossary of Channel Interface Codes and Options (Cont'd)

Code	Option	Definition
DD -		DATAPHONE Select-A-Station (and TABS) interface at customer's point of termination
DE -		DATAPHONE Select-A-Station (and TABS) interface at the customer's end user's point of termination.
DS -		digital hierarchy interface
	- 15	1.544 Mbps (DS1) format per PUB 41451 plus D4
	- 15E	8-bit PCM encoded in one 64 kbps of the DS1 signal
	- 15F	8-bit PCM encoded in two 64 kbps of the DS1 signal
	- 15G	8-bit PCM encoded in three 64 kbps of the DS1 signal
	- 15H	14/11-bit PCM encoded in six 64 kbps of the DS1 signal
	- 15J	1.544 Mbps format per PUB 41451
	- 15K	1.544 Mbps format per PUB 41451 plus extended framing format
	- 15L	1.544 Mbps (DS1) with SF signaling
	- 27	274.176 Mbps (DS4)
	- 27L	274.176 Mbps (DS4) with SF signaling
	- 31	3.152 Mbps (DS1C)
	- 31L	3.152 Mbps (DS1C) with SF signaling
	- 44	44.736 Mbps (DS3)
	- 44L	44.736 Mbps (DS3) with SF signaling
	- 63	6.312 Mbps (DS2)
	- 63L	6.312 Mbps (DS2) with SF signaling
DU -		digital access interface
	- 24	2.4 kbps
	- 48	4.8 kbps
	- 56	56.0 kbps
	- 96	9.6 kbps
	- A	1.544 Mbps format per PUB 41451
	- B	1.544 Mbps format per PUB 41451 plus D4
	- C	1.544 Mbps format per PUB 41451 plus extended farming format
DX -		duplex signaling interface at customer's point of termination
DY -		duplex signaling interface at customer's end user's point of termination

ACCESS SERVICE

10. Interface Groups, Transmission Specifications and Channel Interfaces (Cont'd)

10.3 Special Access Channel Interface and Network Channel Codes (Cont'd)

10.3.1 Glossary of Channel Interface Codes and Options (Cont'd)

Code	Option	Definition
EA - E		Type I E&M Lead Signaling. Customer at POT or customer's end user at POT originates on E Lead.
EA -	M	Type I E&M Lead Signaling. Customer at POT or customer's end user at POT originates on M Lead.
EB - E		Type II E&M Lead Signaling. Customer at POT or customer's end user at POT originates on E Lead.
EB -	M	Type II E&M Lead Signaling. Customer at POT or customer's end user at POT originates on M Lead.
EC -		Type III E&M signaling at customer POT
EX -	A	tandem channel unit signaling for loop start or ground start and customer supplies open end (dial tone, etc.) functions.
EX - B		tandem channel unit signaling for loop start or ground start and customer supplies closed end (dial pulsing, etc.) functions.
GO -		ground start loop signaling - open end function by customer or customer's end user
GS -		ground start loop signaling - closed end function by customer or customer's end user
IA -		E.I.A. (25 pin RS-232)
LA -		end user loop start loop signaling - Type A OPS registered port open end
LB -		end user loop start loop signaling - Type B OPS registered port open end
LC -		end user loop start loop signaling - Type C OPS registered port open end
LO -		loop start loop signaling - open end function by customer or customer's end user
LR -		20 Hz automatic ringdown interface at customer with Telephone Company provided PLAR
LS -		loop start loop signaling - closed end function by customer or customer's end user
NO -		no signaling interface, transmission only
PG -		program transmission - no dc signaling
- 1		nominal frequency from 50 to 15000 Hz
- 3		nominal frequency from 200 to 3500 Hz
- 5		nominal frequency from 100 to 5000 Hz
- 8		nominal frequency from 50 to 8000 Hz

ACCESS SERVICE

10. Interface Groups, Transmission Specifications and Channel Interfaces (Cont'd)

10.3 Special Access Channel Interface and Network Channel Codes (Cont'd)

10.3.1 Glossary of Channel Interface Codes and Options (Cont'd)

Code	Option	Definition
PR		protective relaying*
RV	- 0	reverse battery signaling, one way operation originate by customer
	- T	reverse battery signaling, one way operation, terminate function by customer or customer's end user
SF	-	single frequency signaling with VF band at either customer POT or customer's end user POT
TF	-	telephotograph interface
TT	-	telegraph/teletypewriter interface at either customer POT or customer's end user POT
	- 2	20.0 milliamperes
	- 3	3.0 milliamperes
	- 6	62.5 milliamperes
TV	-	television interface
	- 1	combined (diplexed) video and one audio signal
	- 2	combined (diplexed) video and two audio signals
	- 5	video plus one (or two) audio 5 kHz signal(s) or one (or two) two wire
	- 15	video plus one (or two) audio 15 kHz signal(s)

*Available only for the transmission of audio tone protective relaying signals used in the protection of electric power systems during fault conditions.

ACCESS SERVICE

10. Interface Groups, Transmission Specifications and Channel Interfaces (Cont'd)

10.3 Special Access Channel Interface and Network Channel Codes (Cont'd)

10.3.2 Impedance

The nominal reference impedance with which the channel will be terminated for the purpose of evaluating transmission performance:

Value (ohms)	Code(s)
110	0
150	1
600	2
900	3+
135	5
75	6
124	7
Variable	8
100	9

+For those interface codes with a 4-wire transmission path at the customer designated POT, rather than a standard 900 ohm impedance the code (3) denotes a customer provided transmission equipment termination. Such terminations were provided to customers in accordance with the F.C.C. Docket No. 20099 Settlement Agreement.

ACCESS SERVICE

10. Interface Groups, Transmission Specifications and Channel Interfaces (Cont'd)

10.3 Special Access Channel Interface and Network Channel Codes (Cont'd)

10.3.3 Digital Hierarchy Channel Interface Codes (4DS)

Customers selecting the multiplexed four-wire DSX-1 or higher facility interface option at the customer designated premises will be requested to provide subsequent system and channel assignment data. The various digital bit rates in the digital hierarchy employ the channel interface code 4DS8, 4DS0 or 4DS6 plus the speed options indicated below:

Interface Code and Speed Option	Nominal Bit Rate (Mbps)	Digital Hierarchy Level
4DS8-15	1.544	DS1

10.3.4 Service Designator/Network Channel Code Conversion Table

The purpose of this table is to show the relationship between the service designator codes (e.g. VGC, MT2, etc.) and the network channel codes that are used for:

Service Designator Code	Network Channel Code	Class of Service Code	Bit Rate
MTC	MQ	XDMCX	
MT1	NT	XDN1X	
MT2	NU	XDN2X	
MT3	NV	XDN3X	
TGC	NQ	XDNCX	
TG1	NW	XDN4X	
TG2	NY	XDN5X	
VGC	LQ	XDVDX	
VGW	SE	XDV1X	
VG1	LB	XDV1X	
VG2	LC	XDV2X	

ACCESS SERVICE

10. Interface Groups, Transmission Specifications and Channel Interfaces (Cont'd)

10.3 Special Access Channel Interface and Network Channel Codes (Cont'd)

10.3.4 Service Designator/Network Channel Code Conversion Table (Cont'd)

Service Designator Code	Network Channel Code	Class of Service Code	Bit Rate
VG3	LD	XDV3X	
VG4	LE	XDV4X	
VG5	LF	XDV5X	
VG6	LG	XDV6X	
VG7	LH	XDV7X	
VG8	LJ	XDV8X	
VG9	LK	XDV9X	
VG10	LN	XDVAX	
VG11	LP	XDVBX	
VG12	LR	XDVCX	
APC	PQ	XDPCM/D	
AP1	PE	XDP1M/D	200-3500 Hz
AP2	PF	XDP2M/D	100-5000 Hz
AP3	PJ	XDP3M/D	50-8000 Hz
AP4	PK	XDP4M/D	50-15000 Hz
TV1	TV	XDT1M/D	
TV2	TW	XDT2M/D	
DA1	XA	XDD1X	2.4 kbps
DA2	XB	XDD2X	4.8 kbps
DA3	XG	XDD3X	9.6 kbps
DA4	XH	XDD4X	56.0 kbps
HC1	HC	XDH1X	1.544 Mbps

ACCESS SERVICE

10. Interface Groups, Transmission Specifications and Channel Interfaces (Cont'd)

10.3 Special Access Channel Interface and Network Channel Codes (Cont'd)

10.3.5 Compatible Channel Interfaces

The following tables show the channel interface codes (CIs) which are compatible:

(A) Metallic

Compatible CIs	
2DC8-1	2DC8-2
2DC8-3	2DC8-3
4DS8-*	2DC8-1
4DS8-*	2DC8-2

(B) Telegraph Grade

Compatible CIs		Compatible CIs	
2DB2-10	10IA8	4DB2-10	10IA8
	2TT2-2		2TT2-2
	4TT2-2		4TT2-2
2DB2-43+	10IA8	4DB2-43+	10IA8
	2TT2-2		2TT2-6
	2TT2-6		4TT2-2
	4TT2-2		
		4DS8-*	10IA8
2TT2-2	2TT2-2		2TT2-2
			2TT2-6
2TT2-3	2TT2-2		4TT2-2
	4TT2-2		4TT2-6
2TT2-6	2TT2-6	4TT2-2	4TT2-2
	4TT2-6		
		4TT2-6	2TT2-6

* See 10.3.3 preceding for explanation.
\+ Supplemental Channel Assignment information required.

ACCESS SERVICE

10. Interface Groups, Transmission Specifications and Channel Interfaces (Cont'd)

10.3 Special Access Channel Interface and Network Channel Codes (Cont'd)

10.3.5 Compatible Channel Interfaces (Cont'd)

(C) Voice Grade

Compatible CIs		Compatible CIs		Compatible CIs	
2AB2	2AC2	2DB2	2DA2	2LR2	2LR2
2AB3	2AC2	2DB3	2DA2	2LR3	2LR2
2CT3	2DY2	2DX3	2LA2	2LS	2GS
	4DS8*		2LB2		2LS
	4DX2		2LC2		4GS
	4DX3		2LO3		4LS
	4DY2		2LS2		
	4EA2-E		2LS3	2LS2	2LA2
	4EA2-M				2LB2
	4SF2	2GO2	2GS2		2LC2
	4SF3		2GS3		
	6DX2			2LS3	2LA2
	6DY2	2GO3	2GS2		2LB2
	6DY3		2GS3		2LC2
	6EA2-E				
	6EA2-M	2GS	2GS	2NO2	2DA2
	6EB2-E		2LS		2NO2
	6EB2-M		4GS		
			4LS	2NO3	2NO2
					2PR2
	6EB3-E	2LO2	2LS2		
	6EB3-M				
	8EB2-E		2LS3	2TF3	2TF2
	8EB2-M				
	8EC2	2LO3	2LS2		
	9DY2		2LS3		
	9DY3				
	9EA2				
	9EA3				

* See 10.3.3 preceding for explanation.

ACCESS SERVICE

10. Interface Groups, Transmission Specifications and Channel Interfaces (Cont'd)

10.3 Special Access Channel Interface and Network Channel Codes (Cont'd)

10.3.5 Compatible Channel Interfaces (Cont'd)

(C) Voice Grade

	Compatible CIs
4AB2	2AC2
	4AB2
	4AC2
	4SF2
4AB3	2AC2
	4AC2
	4SF2
4AC2	2AC2
	4AC2

ACCESS SERVICE

10. Interface Groups, Transmission Specifications and Channel Interfaces (Cont'd)

10.3 Special Access Channel Interface and Network Channel Codes (Cont'd)

10.3.5 Compatible Channel Interfaces (Cont'd)

(C) Voice Grade (Cont'd)

Compatible CIs		Compatible CIs		Compatible CIs	
		4DS8-*	2AC2	4DS8-*	4DG2
			2DA2		4LR2
			4DY2		4LS2
			2GO2		4NO2
4DA2	4DA2		2G03		4PR2
			2GS2		4RV2-T
4DB2	2DA2		2GS3		4SF2
	2NO2		2LA2		4SF3
	2PR2		2LB2		4TF2
	4DA2		2LC2		6DA2
	4DB2		2LO2		6DY2
	4NO2		2LO3		6DY3
	4PR2		2LR2		6EA2-E
	6DA2		2LS2		6EA2-M
			2LS3		6EB2-E
4DD3	2DE2		2NO2		6EB2-M
	4DE2		2PR2		6GS2
			2RV2-T		6LS2
			2TF2		8EB2-E
			4AC2		8EB2-M
			4DA2		9DY2
			4DE2		9DY3
			4DX2		9EA2
			4DX3		9EA3
			4DY2		
			4EA2-E		
			4EA2-M		

* See 10.3.3 preceding for explanation.

ACCESS SERVICE

10. Interface Groups, Transmission Specifications and Channel Interfaces (Cont'd)

10.3 Special Access Channel Interface and Network Channel Codes (Cont'd)

10.3.5 Compatible Channel Interfaces (Cont'd)

(C) Voice Grade (Cont'd)

Compatible CIs		Compatible CIs		Compatible CIs	
4DX2	2DY2	4DX2	8EB2-E	4DX3	6DY2
	2LA2		8EB2-M		6DY3
	2LB2		9DY2		
	2LC2		9DY3		6EA2-M
	2L03		9EA2		6EB2-E
	2LS2		9EA3		6EB2-M
	2LS3				6LS2
	2RV2-T	4DX3	2DY2		8EB2-E
	4DX2		2LA2		8EB2-M
	4DYU2		2LB2		9DY2
	4EA2-E		2LC2		9DY3
	4EA2-M		2LO3		9EA2
	4LS2		2LS2		9EA3
	4RV2-T		2LS3		
	4SF2		2RV2-T	4DY2	2DY2
	4SF3		4DX2		4DY2
	6DY2		4DX3		
	6DY3		4DY2		
	6EA2-E		4EA2-E		
	6EA2-M		4EA2-M		
	6EB2-E		4LS2		
	6EB2-M		4RV2-T		
	6LS2		4SF2		
			4SF3		

ACCESS SERVICE

10. Interface Groups, Transmission Specifications and Channel Interfaces (Cont'd)

10.3 Special Access Channel Interface and Network Channel Codes (Cont'd)

10.3.5 Compatible Channel Interfaces (Cont'd)

(C) Voice Grade (Cont'd)

Compatible CIs		Compatible CIs		Compatible CIs	
4EA2-E	2DY2	4EA3-E	2DY2	4GO2	2GO2
	4DY2		4DY2		2GO3
	4EA2-E		4EA2-E		2GS2
	4EA2-M		4EA2-M		2GS3
	4SF2		4SF2		4GS2
	6DY2		6DY2		4SF2
	6DY3		6DY3		6GS2
	6EB2-E		6EA2-E		
	6EB2-M		6EA2-M	4GO3	2GO2
	8EB2-E		6EB2-E		2GS2
	8EB2-M		6EB2-M		2GS3
	9DY2		8EB2-E		4GS2
	9DY3		8EB2-M		4SF2
			9DY2		6GS2
4EA2-M	2DY2		9DY3		
	4DY2		9EA2		
	4EA2-E				
	4EA2-M		9EA3	4GS	2GS
	4SF2				2LS
	6DY2				
	6DY3				4GS
	6EB2-E				4LS
	6EB2-M				
	8EB2-E				
	8EB2-M				
	9DY2				
	9DY3				

ACCESS SERVICE

10. Interface Groups, Transmission Specifications and Channel Interfaces (Cont'd)

10.3 Special Access Channel Interface and Network Channel Codes (Cont'd)

10.3.5 Compatible Channel Interfaces (Cont'd)

(C) Voice Grade (Cont'd)

Compatible CIs		Compatible CIs		Compatible CIs	
4L02	2LS2	4LS3	2LA2	4SF2	2L03T
	2LS3		2LB2		2LR2
	4LS2		2LC2		2LS2
	4SF2		2LO2		2LS3
	6LS2		2LO3		2RV2-T
			4SF2		4AC2
4LO3	2LS2				4DY2
	2LS3	4NO2	2DA2		4LS2
	4LS2		2DE2		4RV2-T
	4SF2		2NO2		4SF2
	6LS2		4DA2		6DY2
			4DE2		6DY3
4LR2	2LR2		4NO2		6GS2
	4LR2		6DA2		9DY2
	4SF2				9DY3
		4RV2-O	2RV2-T		
4LR3	2LR2		4RV2-T	4SF3	2DY2
	4LR2		4SF2		2GO3
	4SF2				2GS2
		4SF2	2AC2		2GS3
4LS	2GS		2DY2		2LA2
	2LS		2GS2		2LB2
	4GS		2GS3		2LC2
	4LS		2LA2		2LO3
			2LB2		2LR2
4LS2	2LA2		2LC2		
	2LB2				
	2LC2				
	2LO2				
	2LO3				

ACCESS SERVICE

10. Interface Groups, Transmission Specifications and Channel Interfaces (Cont'd)

10.3 Special Access Channel Interface and Network Channel Codes (Cont'd)

10.3.5 Compatible Channel Interfaces (Cont'd)

(C) Voice Grade (Cont'd)

Compatible CIs		Compatible CIs		Compatible CIs	
4SF3	2LS2	6DA	4DA2	6DY3	2DY2
	2LS3		6DA2		4DY2
	2RV2-T				6DY2
	4DY2	6DX2	2DY2		6DY3
	4EA2-E		4DY2		
	4EA2-M		4EA2-E	6EA2-E	2AC2
	4GS2				
	4LR2		4EA2-M		2DY2
	4LS2		4SF2		2LA2
	4RV2-T		6DY2		2LB2
	4SF2		6DY3		2LC2
	4SF3		6EA2-E		2LO3
	6DY2		6EA2-M		2LS2
	6DY3		6EB2-E		2LS3
	6EB2-E		6EB2-M		2RV2-T
	6EB2-M		8EB2-E		4AC2
	6GS2		8EB2-M		4DY2
	6LS2		9DY2		4EA2-E
	9DY2		9DY3		4EA2-M
	9DY3		9EA2		4LS2
	9EA2		9EA3		4RV2-T
	9EA3				4SF2
		6DY2	2DY2		4SF3
4TF2	2TF2		4DY2		6DY2
	4TF2		6DY2		6DY3
					6EA2-E
					6EA2-M

ACCESS SERVICE

10. Interface Groups, Transmission Specifications and Channel Interfaces (Cont'd)

10.3 Special Access Channel Interface and Network Channel Codes (Cont'd)

10.3.5 Compatible Channel Interfaces (Cont'd)

(C) Voice Grade (Cont'd)

Compatible CIs		Compatible CIs		Compatible CIs	
6EA2-E	6EB2-E	6EA2-M	6DY2	6EB3-E	2DY2
	6EB2-M		6DY3		4DY2
	6LS2		6EA2-M		4EA2-E
	8EB2-E		6EB2-E		4EA2-M
	8EB2-M		6EB2-M		4SF2
	9DY2		6LS2		6DY2
	9DY3		8EB2-E		6DY3
			8EB2-M		6EA2-E
6EA2-M	2AC2		9DY2		6EA2-M
	2DY2		9DY3		8EB2-E
	2LA2				8EB2-M
	2LB2	6EB2-E	2DY2		9DY2
	2LC2		4DY2		9DY3
	2L03		4SF2		9EA2
	2LS2		6DY2		9EA3
	2LS3		6DY3		
	2RV2-T		6EB2-E	6EX2-A	2GS2
	4AC2		6EB2-M		2GS3
	4DY2		9DY2		2LS2
	4EA2-E		9DY3		2LS3
	4EA2-M				4GS2
	4LS2	6EB2-M	2DY2		4LS2
	4RV2-T		4DY2		4SF2
	4SF2		4SF2		6GS2
	4SF3		6DY2		6LS2
			6DY3		
			6EB2-M		
			9DY2		
			9DY3		

ACCESS SERVICE

10. Interface Groups, Transmission Specifications and Channel Interfaces (Cont'd)

10.3 Special Access Channel Interface and Network Channel Codes (Cont'd)

10.3.5 Compatible Channel Interfaces (Cont'd)

(C) Voice Grade (Cont'd)

Compatible CIs		Compatible CIs		Compatible CIs	
6EX2-B	2G03	8BE2-E	2AC2	8EB2-M	2AC2
	2LA2		2DY2		2DY2
	2LB2		2LA2		2LA2
	2LC2		2LB2		2LB2
	2LO2		2LC2		2LC2
	2L03		2L03		2LO3
	2LR2		2LS2		2LS2
	4LR2		2LS3		2LS3
	4SF2		2RV2-T		2RV2-T
			4AC2		4AC2
6G02	2GO2		4DY2		4DY2
	2GS2		4LS2		4LS2
	2GS3		4RV2-T		4RV2-T
	4GS2		4SF2		4SF2
	4SF2		4SF3		4SF3
	6GS2		6DY2		6DY2
			6DY3		6DY3
6L02	2LS2		6EB2-E		6EB2-E
	2LS3		6EB2-M		6EB2-M
	4LS2		6LS2		6LS2
	4SF2		8EB2-E		8EB2-M
	6LS2		8EB2-M		9DY2
			9DY2		9DY3
6LS2	2LA2		9DY3		
	2LB2				
	2LC2				
	2LO2				
	2LO3				
	4SF2				

ACCESS SERVICE

10. Interface Groups, Transmission Specifications and Channel Interfaces (Cont'd)

10.3 Special Access Channel Interface and Network Channel Codes (Cont'd)

10.3.5 Compatible Channel Interfaces (Cont'd)

(C) Voice Grade (Cont'd)

Compatible CIs		Compatible CIs		Compatible CIs	
8EC2	2DY2	9DY2	2DY2	9EA3	2DY2
	4DY2		4DY2		4DY2
	4EA2-E		6DY2		4EA2-E
	4EA2-M		6DY3		4EA2-M
	4SF2		9DY2		6DY2
	6DY2				6DY3
	6DY3	9DY3	2DY2		6EA2-E
	6EA2-E		4DY2		6EA2-M
	6EA2-M		6DY2		6EB2-E
	6EB2-E		6DY3		6EB2-M
	6EB2-M		9DY2		8EB2-E
	8EB2-E		9DY3		8EB2-M
	8EB2-M				9DY2
	9DY2	9EA2	2DY2		9DY3
	9DY3		4DY2		9EA3
	9EA2		4EA2-E		
	9EA3		4EA2-M		
			6DY2		
			6DY3		
			6EA2-E		
			6EA2-M		
			6EB2-E		
			6EB2-M		
			8EB2-E		
			8EB2-M		
			9DY2		
			9DY3		
			9EA2		
			9EA3		

ACCESS SERVICE

10. Interface Groups, Transmission Specifications and Channel Interfaces (Cont'd)

10.3 Special Access Channel Interface and Network Channel Codes (Cont'd)

10.3.5 Compatible Channel Interfaces (Cont'd)

(D) Program Audio

Compatible CIs		Compatible CIs	
2PG2-1	2PG1-1 2PG2-1	4DS8-15E	2PG1-3 2PG2-3
2PG2-3	2PG1-3 2PG2-3	4DS8-15F	2PG1-5 2PG2-5
2PG2-5	2PG1-5 2PG2-5	4DS8-15G	2PG1-8 2PG2-8
2PG2-8	2PG1-8 2PG2-8	4DA8-15H	2PG1-1 2PG2-1

ACCESS SERVICE

10. Interface Groups, Transmission Specifications and Channel Interfaces (Cont'd)

10.3 Special Access Channel Interface and Network Channel Codes (Cont'd)

10.3.5 Compatible Channel Interfaces (Cont'd)

(E) Video

Compatible CIs		Compatible CIs	
2TV6-1	4TV6-15 4TV7-15	4TV7-5	4TV6-5 4TV7-5
2TV6-2	6TV6-15 6TV7-15	4TV7-15	4TV6-15 4TV7-15
2TV7-1	4TV6-15 4TV7-15	6TV6-5	6TV6-5 6TV7-5
2TV7-2	6TV6-15 6TV7-15	6TV6-15	6TV6-15 6TV7-15
4TV6-5	4TV6-5 4TV7-5	6TV7-5	6TV6-5 6TV7-5
4TV6-15	4TV6-15 4TV7-15	6TV7-15	6TV6-15 6TV7-15

ACCESS SERVICE

10. Interface Groups, Transmission Specifications and Channel Interfaces (Cont'd)

10.3 Special Access Channel Interface and Network Channel Codes (Cont'd)

10.3.5 Compatible Channel Interfaces (Cont'd)

(F) Digital Data

Compatible CIs		Compatible CIs		Compatible CIs	
4DS8-15	4DS8-15+	4DU5-24	4DU5-24	6DU5-24	6DU5-24
	4DU5-24				
	4DU5-48	4DU5-48	4DU5-48	6DU5-48	6DU5-48
	4DU5-56				
	4DU5-96	4DU5-96	4DU5-96	6DU5-56	6DU5-56
	6DU5-24				
	6DU5-48	4DU8-56	4DU5-56	6DU5-96	6DU5-96
	6DU5-96				

+Available only as a cross connect of two digital channels at appropriate digital speeds at a Telephone Company hub.

ACCESS SERVICE

10. Interface Groups, Transmission Specifications and Channel Interfaces (Cont'd)

10.3 Special Access Channel Interface and Network Channel Codes (Cont'd)

10.3.5 Compatible Channel Interfaces (Cont'd)

(G) High Capacity

Compatible CIs		Compatible CIs	
4DS0-63	4DS0-63 4DU8-A,B or C 6DU8-A,B or C	4DS8-15J	4DU8-A 6DU8-A
		4DS8-15K	4DU8-B 4DU8-C 6DU8-B 6DU8-C
4DS6-27	4DS6-27 4DU8-A,B or C 6DU8-A,B or C		
4DS6-44	4DS6-44 4DU8-A,B or C 6DU8-A,B or C	4DS8-31	4DS8-31 4DU8-A,B or C 6DU8-A,B or C
4DS8-15	4DS8-15+ 4DU8-B 6DU8-8	4DU8-A,B or C	4DU8-A,B or C

+Available only as a cross connect of two individual channels of 1.544 Mbps facilities at a Telephone Company hub.

Vice President
4001 Rodney Parham Road
Little Rock, AR 72212

ACCESS SERVICE

11. Advanced Communications Networks

Reserved for future use.

(D)

(D)

(TR03)

ACCESS SERVICE

11. Advanced Communications Networks (Cont'd)

Reserved for future use.

(D)

(D)

(TR03)

ACCESS SERVICE

11. Advanced Communications Networks (Cont'd)

Reserved for future use.

(D)

(D)

(TR03)

ACCESS SERVICE

11. Advanced Communications Networks (Cont'd)

11.3 Service Provisioning (Cont'd)

Reserved for future use.

(D)

(D)

(TR03)

ACCESS SERVICE

11. Advanced Communications Networks (Cont'd)

Reserved for future use.

(D)

(D)

(TR03)

ACCESS SERVICE

11. Advanced Communications Networks (Cont'd)

Reserved for future use.

(D)

(D)

(TR03)

11. Advanced Communications Networks (Cont'd)

11.4 Rate Regulations (Cont'd)

Reserved for future use.

(D)

(D)

(TR03)

ACCESS SERVICE

11. Advanced Communications Networks (Cont'd)

Reserved for future use.

(D)

(D)

(TR03)