ACCESS SERVICE

This tariff cancels NEVADA BELL Tariff F.C.C. No. 1

Regulations, Rates and Charges
applying to the provision of Access Services
within a Local Access and Transport Area (LATA) or
equivalent Market Area for connection to interstate
communications facilities for Interstate Customers within
the operating territory of NEVADA BELL

Original tariff effective May 25, 1987

The title and street address of this tariff's Issuing Officer are located on the bottom of all tariff pages and check sheets.

Access Services are provided by means of wire, fiber optics, radio or any other suitable technology or a combination thereof.

This tariff is issued under authority of Special Permission No. 01-011 of the F.C.C.

(This page filed under Transmittal No. 1)

ACCESS SERVICE

On January 3, 2005 Nevada Bell Telephone Company (NBTC) issued Supplement No. 5 in Transmittal No. 87 pursuant to Wireline Competition Bureau's Order DA 04-4048, release date December 27, 2004. The Order suspended the effective date of NBTC's Transmittal No. 84 for 5 months and instituted an investigation.

On January 21, 2005, under the authority of Special Permission No. 05-004 of the F.C.C., NBTC withdrew Transmittal No. 84 without it becoming effective.

(This page filed under Transmittal No. 94)

ACCESS SERVICE

On December 13, 2004, Nevada Bell Telephone Company (NBTC) issued Transmittal No. 84, which proposed changes to Section 2 of NBTC Tariff F.C.C. No. 1 in order to revise regulations governing the payment of deposits and other payments. Transmittal No. 84 was scheduled to become effective on December 28, 2004.

This supplement is filed pursuant to the Competitive Pricing Division, Wireline Competition Bureau's Order 04-4048, In the Matter of Ameritech Operating Companies Tariff FCC No. 2 – Transmittal No. 1430, Nevada Bell Telephone Company Tariff FCC No. 1-Transmittal No. 84, Pacific Bell Telephone Company Tariff FCC No. 1- Transmittal No. 187, Southern New England Telephone Company Tariff FCC No. 39 – Transmittal No. 843 and Southwestern Bell Telephone Company Tariff FCC No. 73 – Transmittal No. 3022, released December 27, 2004.

The aforementioned Order suspends the effective date of NBTC's Transmittal No. 84 for 5 months and institutes an investigation.

Listed are the affected tariff pages:

Page	Revision No.
2-14	3rd
2-15	3rd
2-15.1	2nd
2-35	3rd
2-35.1	2nd
2-35.2	2nd
2-35.3	2nd
2-36	3rd

(This page filed under Transmittal No. 87)

ACCESS SERVICE

On August 20, 2002 Nevada Bell Telephone Company (NBTC) issued Supplement No. 1 in Transmittal No. 21 pursuant the Pricing Policy Division, Wireline Competition Bureau's Order DA 02-2039, released August 16, 2002. Order DA 02-2039 suspended the effective date of NBTC's Transmittal No. 20 for 5 months and instituted an investigation.

On January 13, 2003, under authority of Special Permission No. 03-002, NBTC withdrew Transmittal No. 20 without it becoming effective.

(This page filed under Transmittal No. 28)

ACCESS SERVICE

This supplement is filed pursuant to the Pricing Policy Division, Wireline Competition Bureau's Order on Reconsideration, DA 02-2898, In the Matter of Southwestern Bell Telephone Company Tariff FCC No. 73 Transmittal No. 2913, Ameritech Operating Companies Tariff FCC No. 2 Transmittal 1318, Southern New England Telephone Company Tariff FCC No. 39 Transmittal No. 774, Pacific Bell Telephone Company Tariff FCC No. 1 Transmittal No. 82 and Nevada Bell Telephone Company Tariff FCC No. 1 Transmittal No. 22, released October 29, 2002.

The purpose of this supplement is to cancel Supplement No. 2 issued October 3, 2002 under Transmittal No. 23. Supplement No. 2 was filed pursuant to the Commission’s Order DA 02-2472 released September 30, 2002.

On September 30, 2002, as noted in Suspension Order 02-2472, the Pricing Policy Division of the Wireline Competition Bureau suspended for one day, imposed an accounting order, and set for investigation the aforementioned transmittals. The transmittals addressed in that order sought to establish rates for Universal Service Fund charges billed to residential and business customers to reflect the companies’ fourth quarter 2002 contribution obligations.

After release of the Suspension Order, Division staff met with SBC to discuss the tariff filings. SBC provided additional explanations in support of its tariff filings that satisfied Division staff concerns. Accordingly, the investigations and accounting orders imposed in Order 02-2472 are terminated.

The proposed rate decreases listed in the following tariff page are effective as of October 2 2002.

Page	Revision No.
4-11	7th

(This page filed under Transmittal No. 24)

ACCESS SERVICE

This supplement is filed pursuant the Pricing Policy Division, Wireline Competition Bureau's Order DA 02-2472, In the Matter of Southwestern Bell Telephone Company Tariff FCC No. 73 Transmittal No. 2913, Ameritech Operating Companies Tariff FCC No. 2 Transmittal 1318, Southern New England Telephone Company Tariff FCC No. 39 Transmittal No. 774, Pacific Bell Telephone Company Tariff FCC No. 1 Transmittal No. 82 and Nevada Bell Telephone Company Tariff FCC No. 1 Transmittal No. 22, released September 30, 2002.

The Order suspends for one day, imposes an accounting order and sets for investigation proposed rate decreases in NBTC’s Transmittal No. 22.

Page	Revision No.
4-11	7th

(This page filed under Transmittal No. 23)

ACCESS SERVICE

This supplement is filed pursuant the Competitive Pricing Division, Common Carrier Bureau's Order, In the Matter of Ameritech Operating Companies Tariff FCC No. 2, Nevada Bell Telephone Company Tariff FCC No. 1, Pacific Bell Telephone Company Tariff FCC No. 1 Southern New England Telephone Company Tariff FCC No. 39 and Southwestern Bell Telephone Company Tariff FCC No. 73 released August 16, 2002. The aforementioned Order suspends the effective date of NBTC's Transmittal No. 20 for 5 months and institutes an investigation.

Page	Revision No.
2-14	1st
2-15	1st
2-15.1	Original
2-35	1st
2-35.1	Original
2-35.2	Original
2-35.3	Original
2-35.4	Original
2-35.5	Original
2-36	1st

(This page filed under Transmittal No. 21)

ACCESS SERVICE

RATES, RULES AND CHARGES

Title Page and Pages 1 to 22-45, inclusive of this tariff are effective as of the date shown. Original and revised pages as named below and Supplement No. 6 contains all changes from the original tariff that are in effect on the date hereof.

CHECK SHEET

Page	Number of Revision Except as Indicated	Page	Number of Revision Except as Indicated
Title	Original	25	1st
1	101st*	26	Original
1.1	14th	27	Original
1.2	45th	28	1st
1.2.1	Original	29	1st
1.3	2nd	30	1st
1.4	12th	31	Original
1.5	40th	1-1	Original
1.5.1	4th	1-2	Original
1.6	15th*	2-1	1st
1.7	4th	2-2	1st
1.7.1	1st	2-3	Original
1.8	13th	2-4	1st
1.9	24th	2-5	2nd
1.10	5th	2-5.1	Original
2	Original	2-6	Original
3	Original	2-7	Original
4	1st	2-8	Original
5	Original	2-9	Original
6	1st	2-10	Original
7	1st	2-11	Original
8	Original	2-12	1st*
9	Original	2-13	Original
10	3rd	2-14	5th
11	Original	2-15	5th
12	Original	2-15.1	4th
13	Original	2-16	Original
14	Original	2-17	1st
15	Original	2-18	Original
16	Original	2-19	Original
17	1st	2-20	Original
18	Original	2-21	Original
19	3rd	2-22	Original
20	Original	2-23	Original
21	Original	2-24	Original
22	2nd	2-25	Original
22.1	Original	2-26	Original
22.2	3rd	2-27	Original
23	Original	2-28	Original
24	Original	2-29	Original
		2-30	Original

* New or Revised

(This page filed under Transmittal No. 104)

President, Industry Markets
Nevada Bell Telephone Company
One SBC Plaza, Dallas, Texas 75202

ACCESS SERVICE

RATES, RULES AND CHARGES

CHECK SHEET (Cont'd)

Page	Number of Revision Except as Indicated	Page	Number of Revision Except as Indicated
2-31	Original	2-69	Original
2-32	Original	2-70	Original
2-33	Original	2-71	1st
2-34	Original	2-72	Original
2-35	5th*	2-73	3rd
2-35.1	4th*	2-74	4th
2-35.2	4th*	2-75	Original
2-35.3	4th*	2-76	Original
2-35.4	1st	2-77	4th
2-35.5	1st	2-78	Original
2-36	5th*	2-79	Original
2-37	Original	2-80	Original
2-38	Original	2-81	Original
2-39	1st*	2-82	Original
2-40	1st*	2-83	Original
2-41	1st*	2-84	Original
2-42	Original	2-85	Original
2-43	Original	2-86	1st
2-44	Original	2-86.1	Original
2-45	Original	2-87	1st
2-46	Original	2-88	Original
2-47	Original	2-89	1st
2-48	Original	2-90	1st
2-49	1st	2-91	Original
2-50	Original	2-92	Original
2-51	Original	2-93	Original
2-52	Original	2-94	Original
2-53	Original	2-95	1st
2-54	Original	2-96	Original
2-55	Original	2-97	Original
2-56	Original	2-98	5th
2-57	Original	2-99	2nd
2-58	Original	3-1	Original
2-59	Original	3-2	Original
2-60	Original	3-3	Original
2-61	Original	3-4	Original
2-62	Original	3-5	Original
2-63	Original	3-6	Original
2-64	Original	3-7	Original
2-65	Original	3-8	Original
2-66	Original	3-9	Original
2-67	Original	3-10	Original
2-68	Original	3-11	Original
		3-12	Original

*New or Revised

(This page filed under Transmittal No. 97)

ACCESS SERVICE

RATES, RULES AND CHARGES

CHECK SHEET (Cont'd)

Page	Number of Revision Except as Indicated	Page	Number of Revision Except as Indicated
3-13	Original	5-11	1st
3-14	Original	5-12	1st
3-15	Original	5-13	3rd
3-16	Original	5-14	3rd
3-17	Original	5-15	6th
3-18	Original	5-16	3rd
3-19	Original	5-17	7th
3-20	Original	5-17.1	5th
3-21	1st	5-17.1.1	1st
3-22	Original	5-17.2	4th
3-23	Original	5-18	3rd
3-24	Original	5-19	3rd
3-25	Original	5-19.1	2nd
3-26	Original	5-19.2	2nd
3-27	Original	5-19.3	2nd
3-28	Original	5-19.4	2nd
3-29	Original	5-19.5	2nd
3-30	Original	5-19.6	2nd
4-1	1st	5-19.7	2nd
4-2	Original	5-20	6th
4-3	Original	5-21	Original
4-4	1st	5-22	Original
4-5	Original	5-23	Original
4-6	Original	5-24	Original
4-7	1st	5-25	Original
4-8	1st	5-26	Original
4-8.1	2nd	5-27	Original
4-9	16th*	5-28	Original
4-10	6th	6-1	Original
4-11	18th*	6-2	Original
5-1	3rd	6-3	1st
5-2	1st	6-4	Original
5-3	7th	6-5	Original
5-3.1	6th	6-6	Original
5-3.2	3rd	6-7	Original
5-3.3	3rd	6-8	Original
5-3.4	5th	6-9	Original
5-4	1st	6-10	Original
5-5	1st	6-11	Original
5-6	1st	6-12	Original
5-7	Original	6-13	Original
5-8	Original	6-14	Original
5-9	Original	6-15	Original
5-10	Original	6-16	Original

*New or Revised

(This page filed under Transmittal No. 103)

President, Industry Markets
Nevada Bell Telephone Company
One SBC Plaza, Dallas, Texas 75202

ACCESS SERVICE
RATES, RULES AND CHARGES
CHECK SHEET (Cont'd)

Page	Number of Revision Except as Indicated	Page	Number of Revision Except as Indicated
6-22	Original	6-63	Original
6-22.1	Original*	6-64	Original
6-23	Original	6-65	Original
6-24	Original	6-66	Original
6-25	Original	6-67	Original
6-26	Original	6-68	Original
6-27	Original	6-69	Original
6-28	Original	6-70	Original
6-29	Original	6-71	Original
6-30	Original	6-72	Original
6-31	Original	6-73	Original
6-32	Original	6-74	1st
6-33	Original	6-75	Original
6-34	Original	6-76	Original
6-35	Original	6-77	Original
6-36	Original	6-78	Original
6-37	Original	6-79	Original
6-38	Original	6-80	Original
6-39	Original	6-81	Original
6-40	Original	6-82	Original
6-41	Original	6-83	Original
6-42	Original	6-84	Original
6-43	Original	6-85	Original
6-44	Original	6-86	Original
6-45	Original	6-87	Original
6-46	Original	6-88	Original
6-47	Original	6-89	Original
6-48	Original	6-90	Original
6-49	Original	6-91	Original
6-50	Original	6-92	Original
6-51	Original	6-93	Original
6-52	Original	6-94	Original
6-53	Original	6-95	Original
6-54	Original	6-96	Original
6-55	Original	6-97	Original
6-56	Original	6-98	Original
6-57	Original	6-99	Original
6-58	Original	6-100	Original
6-59	Original	6-101	Original
6-60	Original	6-102	Original
6-61	Original	6-103	Original
6-62	Original		

*New or Revised

(This page filed under Transmittal No. 62)

David A. Cole
President, Industry Markets
Nevada Bell Telephone Company
One Bell Plaza, Dallas, Texas 75202

ACCESS SERVICE
RATES, RULES AND CHARGES
CHECK SHEET (Cont'd)

Page	Number of Revision Except as Indicated	Page	Number of Revision Except as Indicated
6-104	Original	6-147	3rd
6-105	Original	6-148	Original
6-106	Original	6-149	4th
6-107	Original	6-150	6th*
6-108	Original	6-151	Original
6-109	Original	6-152	Original
6-110	Original	6-153	Original
6-111	Original	6-154	Original
6-112	Original	6-155	Original
6-113	Original	6-156	Original
6-114	Original	6-157	Original
6-115	Original	6-158	Original
6-116	Original	6-159	Original
6-117	Original	6-160	Original
6-118	Original	6-161	Original
6-119	Original	6-162	2nd
6-120	Original	6-163	Original
6-121	Original	7-1	Original
6-122	Original	7-2	Original
6-123	Original	7-2.1	Original
6-124	Original	7-3	2nd
6-125	Original	7-4	Original
6-126	Original	7-5	Original
6-127	Original	7-6	Original
6-128	Original	7-7	Original
6-129	Original	7-8	Original
6-130	Original	7-9	Original
6-131	Original	7-10	Original
6-132	Original	7-11	Original
6-133	Original	7-12	1st
6-134	Original	7-13	Original
6-135	Original	7-14	Original
6-136	Original	7-15	Original
6-137	Original	7-16	Original
6-138	Original	7-17	Original
6-139	Original	7-18	Original
6-140	Original	7-19	Original
6-141	Original	7-20	Original
6-142	Original	7-21	Original
6-143	Original	7-22	Original
6-144	Original	7-23	Original
6-145	Original	7-24	Original
6-146	5th*	7-25	1st

*New or Revised

(This page filed under Transmittal No. 103)

ACCESS SERVICE
RATES, RULES AND CHARGES
CHECK SHEET (Cont'd)

Page	Number of Revision Except as Indicated	Page	Number of Revision Except as Indicated
7-26	Original	7-81.2	2nd
7-27	3rd	7-81.3	2nd
7-28	1st	7-81.4	5th
7-29	Original	7-81.5	4th
7-30	Original	7-81.6	2nd
7-31	Original	7-81.7	3rd
7-32	Original	7-81.8	Original
7-33	Original	7-82	18th*
7-34	1st	7-83	7th*
7-35	Original	7-84	15th*
7-36	Original	7-84.1	3rd*
7-37	Original	7-85	1st
7-38	Original	7-85.1	Original
7-39	1st	7-85.2	Original
7-40	Original	7-86	3rd
7-41	Original	7-87	3rd
7-42	Original	7-87.1	3rd
7-43	Original	7-87.2	3rd
7-44	Original	7-87.3	2nd
7-45	Original	7-87.4	2nd
7-46	Original	7-88	Original
7-47	Original	7-89	Original
7-48	Original	7-90	1st
7-49	1st	7-91	1st
7-50	Original	7-91.1	3rd
7-51	Original	7-91.2	2nd
7-52	1st	7-91.3	Original
7-53	Original	7-91.4	Original
7-54	Original	7-91.5	Original
7-55	Original	7-91.6	Original
7-56	8th	7-91.7	Original
7-57	Original	7-91.8	Original
7-58	1st	7-91.9	Original
7-59	Original	7-91.10	Original
7-60	Original	7-92	4th
7-61	1st	7-93	3rd
7-62	3rd	7-93.1	Original
7-63	1st	7-94	Original
7-64	2nd*	8-1	1st
7-65	1st*	8-2	2nd
7-66	Original	8-3	1st
7-67	Original	8-3.1	Original
7-68	Original	8-4	Original
7-69	1st*	8-5	Original
7-70	Original	8-6	Original
7-71	Original	8-7	Original
7-72	Original	8-8	Original
7-73	8th*	8-9	Original
7-74	Original	8-10	1st
7-75	1st	8-11	1st
7-76	Original	8-12	Original
7-77	Original	8-13	Original
7-78	1st	8-14	Original
7-78.1	Original	8-15	2nd
7-79	3rd	8-16	Original
7-79.1	Original	8-17	2nd
7-80	3rd	8-18	1st
7-81	Original	8-19	Original
7-81.1	2nd		

*New or Revised

(This page filed under Transmittal No. 103)

ACCESS SERVICE
RATES, RULES AND CHARGES
CHECK SHEET (Cont'd)

Page	Number of Revision Except as Indicated	Page	Number of Revision Except as Indicated
9-1	Original		
9-2	Original		
9-3	Original		
9-4	Original		
9-5	Original		
9-6	Original		
9-7	Original		
9-8	Original		
9-9	Original		
9-10	Original		
9-11	Original		
9-12	Original		
9-13	Original		
9-14	5th*		
9-15	Original		
9-16	Original		
9-17	Original		
9-18	1st		
9-19	2nd		
9-20	Original		
9-21	Original		
9-22	Original		
9-23	1st		
9-24	Original		
9-25	Original		
9-26	Original		
10-1	Original		
10-2	Original		

*New or Revised

(This page filed under Transmittal No. 103)

President, Industry Markets
Nevada Bell Telephone Company
One SBC Plaza, Dallas, Texas 75202

ACCESS SERVICE

RATES, RULES AND CHARGES
CHECK SHEET (Cont'd)

Page	Number of Revision Except as Indicated	Page	Number of Revision Except as Indicated
10-3	Original	12-8	1st
10-4	Original	12-9	1st
10-5	Original	12-10	1st
10-6	Original	12-11	1st
10-7	Original	12-12	2nd
10-8	Original	13-1	4th
10-9	Original	13-2	4th
10-10	Original	13-3	Original
10-11	Original	13-4	3rd
10-12	Original	13-5	4th
10-13	Original	13-6	3rd
10-14	Original	13-7	3rd
10-15	Original	13-8	4th
10-16	Original	13-9	5th*
10-17	Original	13-10	5th*
10-18	Original	13-11	Original
10-19	Original	13-12	Original
10-20	Original	13-13	Original
10-21	Original	13-14	Original
10-22	1st	13-15	Original
10-22.1	Original	13-16	Original
10-22.1.1	Original	13-17	Original
10-22.2	Original	13-18	Original
10-22.3	Original	13-19	Original
10-22.4	Original	13-20	Original
10-22.5	Original	13-21	Original
10-22.6	Original	13-22	Original
10-22.7	Original	13-23	Original
10-23	Original	13-24	1st
10-24	Original	13-25	1st
10-25	Original	13-26	Original
10-26	Original	13-27	Original
10-27	Original	13-28	Original
10-28	1st	13-29	Original
10-29	Original	13-30	Original
10-30	2nd	13-31	Original
10-30.1	Original	13-32	Original
10-31	1st	13-33	Original
10-32	Original	13-34	Original
10-33	Original	13-35	Original
10-34	Original	13-36	Original
10-35	Original	13-37	Original
11-1	Original	13-38	Original
11-2	Original	13-39	Original
11-3	1st	13-40	Original
11-4	Original	13-41	3rd
11-5	Original	13-42	Original
11-6	Original	13-43	3rd
12-1	Original	13-44	3rd
12-2	Original	13-45	4th
12-3	1st	13-46	3rd
12-4	1st	13-47	2nd
12-5	1st		
12-6	1st		
12-7	1st		

*New or Revised

(This page filed under Transmittal No. 104)

ACCESS SERVICE

RATES, RULES AND CHARGES

CHECK SHEET (Cont'd)

Page	Number of Revision Except as Indicated	Page	Number of Revision Except as Indicated
13-48	2nd*	15-33	Original
13-49	Original	15-34	Original
13-50	Original	15-35	Original
13-51	Original	15-36	Original
13-52	Original	15-37	Original
13-53	Original	15-38	Original
13-54	Original	15-39	Original
13-55	Original	15-40	Original
13-56	Original	15-41	Original
13-57	Original	15-42	Original
13-58	Original	15-43	Original
13-59	Original	15-44	Original
14-1	Original	15-45	Original
14-2	Original	15-46	Original
15-1	Original	15-47	Original
15-2	Original	15-48	Original
15-3	Original	15-49	Original
15-4	Original	16-1	Original
15-5	Original	17-1	Original
15-6	Original	17-2	Original
15-7	Original	17-3	Original
15-8	Original	17-4	Original
15-9	Original	17-5	Original
15-10	Original	18-1	Original
15-11	Original	18-2	Original
15-12	Original	18-3	Original
15-13	Original	18-4	Original
15-14	Original	18-5	Original
15-15	Original	18-6	Original
15-16	Original	18-7	Original
15-17	Original	18-8	Original
15-18	Original	18-9	Original
15-19	Original	18-10	Original
15-20	Original	18-11	Original
15-21	Original	18-12	Original
15-22	Original	18-13	Original
15-23	Original	18-14	Original
15-24	Original	18-15	Original
15-25	Original	18-16	Original
15-26	Original	18-17	Original
15-27	Original	18-18	Original
15-28	Original	18-19	Original
15-29	Original	18-20	Original
15-30	Original	18-21	Original
15-31	Original	18-22	Original
15-32	Original	18-23	Original

*New or Revised

(This page filed under Transmittal No. 74)

ACCESS SERVICE

RATES, RULES AND CHARGES

CHECK SHEET (Cont'd)

Page	Number of Revision Except as Indicated	Page	Number of Revision Except as Indicated
18-22	Original		
18-23	Original		
18-24	Original		
18-25	Original		
18-26	Original		
18-27	Original		
18-28	Original		
18-29	Original		
18-30	Original		
18-31	Original		
18-32	Original		
18-33	Original		
18-34	Original		
18-35	Original		

(This page filed under Transmittal No. 38)

David A. Cole
President, Industry Markets
Nevada Bell Telephone Company
One Bell Plaza, Dallas, Texas 75202

ACCESS SERVICE

RATES, RULES AND CHARGES

CHECK SHEET (Cont'd)

Page	Number of Revision Except as Indicated	Page	Number of Revision Except as Indicated
18-36	Original	20-9	2nd
18-37	Original	20-10	1st
18-38	Original	20-11	1st
18-39	Original	20-12	1st
18-40	Original	20-13	1st
18-41	Original	20-14	1st
18-42	Original	20-15	1st
18-43	Original	20-16	1st
18-44	Original	20-17	1st
18-45	Original	20-18	1st
18-46	Original	20-19	1st
18-47	Original	20-20	1st
18-48	Original	20-21	1st
18-49	Original	20-22	1st
18-50	Original	20-23	1st
18-51	Original	20-24	1st
18-52	Original	20-25	1st
18-53	5th	20-26	1st
18-54	Original	20-27	1st
18-55	Original	20-28	1st
18-56	Original	20-29	1st
19-1	Original	20-30	1st
19-2	Original	20-31	1st
19-3	Original	20-32	1st
19-4	Original	20-33	2nd
19-5	Original	20-34	5th*
19-6	Original	20-35	3rd
19-7	Original	20-36	2nd
19-8	Original	20-37	1st
19-9	Original	20-38	2nd
19-10	Original	20-39	1st
19-11	Original	20-40	3rd
19-12	Original	20-41	1st
19-13	3rd*	20-42	1st
20-1	1st	20-43	1st
20-2	1st	20-44	1st
20-3	1st	20-45	1st
20-4	1st	20-46	1st
20-5	2nd	20-47	2nd
20-6	2nd		
20-7	1st		
20-8	2nd		

*New or Revised

(This page filed under Transmittal No. 103)

ACCESS SERVICE

RATES, RULES AND CHARGES

CHECK SHEET (Cont'd)

Page	Number of Revision Except as Indicated	Page	Number of Revision Except as Indicated
21-1	2nd	22-12	Original
21-2	3rd	22-13	Original
21-3	2nd	22-14	Original
21-4	Original	22-15	Original
21-4.1	Original	22-16	2nd
21-4.2	1st	22-17	2nd
21-5	3rd	22-17.1	Original
21-6	2nd	22-18	Original
21-7	3rd	22-19	3rd
21-8	1st	22-19.1	3rd
21-9	1st	22-19.2	Original
21-10	3rd	22-20	2nd
21-11	1st	22-21	Original
21-12	1st	22-22	1st
21-13	2nd	22-23	1st
21-14	6th	22-23.1	Original
21-15	2nd	22-24	Original
21-16	2nd	22-25	Original
21-16.1	Original	22-26	Original
21-17	1st	22-27	Original
21-18	Original	22-28	Original
21-19	2nd	22-29	Original
21-20	3rd	22-30	Original
21-21	3rd*	22-31	Original
21-22	Original	22-32	Original
21-23	Original	22-33	Original
21-24	3rd*	22-34	Original
21-25	1st*	22-35	Original
21-26	Original	22-36	Original
21-27	3rd*	22-37	Original
21-28	Original	22-38	Original
21-29	1st	22-39	Original
21-29.1	2nd*	22-40	Original
21-29.2	2nd	22-41	Original
21-30	2nd	22-42	Original
22-1	Original	22-43	1st
22-2	Original	22-44	1st
22-3	Original	22-44.1	Original
22-4	Original	22-45	Original
22-5	Original	23-1	Original
22-6	Original	23-2	Original
22-7	Original	23-3	Original
22-8	Original	23-4	Original
22-9	Original	23-5	Original
22-10	Original	23-6	Original
22-11	1st	23-7	Original

*New or Revised

(This page filed under Transmittal No. 103)

President, Industry Markets
Nevada Bell Telephone Company
One SBC Plaza, Dallas, Texas 75202

ACCESS SERVICE
RATES, RULES AND CHARGES
CHECK SHEET (Cont'd)

Page	Number of Revision Except as Indicated	Page	Number of Revision Except as Indicated
23-8	Original	23-60	Original*
23-9	Original	23-61	Original*
23-10	Original	23-62	Original*
23-11	Original	23-63	Original*
23-12	Original	23-64	Original*
23-13	Original	23-65	Original*
23-14	Original	23-66	Original*
23-15	Original	23-67	Original*
23-16	Original	23-68	Original*
23-17	Original	23-69	Original*
23-18	Original	23-70	Original*
23-19	Original	23-71	Original*
23-20	Original	23-72	Original*
23-21	Original	23-73	Original*
23-22	Original	23-74	Original*
23-23	Original	23-75	Original*
23-24	Original	23-76	Original*
23-25	Original	23-77	Original*
23-26	Original	23-78	Original*
23-27	Original	23-79	Original*
23-28	Original	24-1	1st
23-29	Original	24-2	Original
23-30	Original	24-3	Original
23-31	Original	24-4	Original
23-32	Original	24-5	1st
23-33	Original	24-6	1st
23-34	Original	24-7	1st
23-35	Original	24-8	1st
23-36	Original	24-9	1st
23-37	Original	24-10	Original
23-38	Original	24-11	Original
23-39	Original	24-12	1st
23-40	Original	24-13	Original
23-41	Original	24-14	Original
23-42	Original	24-15	Original
23-43	Original	24-16	1st
23-44	Original	24-17	Original
23-45	Original	24-18	1st
23-46	Original	24-19	1st
23-47	Original		
23-48	Original		
23-49	Original		
23-50	Original		
23-51	Original		
23-52	Original		
23-53	Original		
23-54	Original		
23-55	Original		
23-56	Original		
23-57	Original		
23-58	Original*		
23-59	Original*		

*New or Revised

(This page filed under Transmittal No. 102)

ACCESS SERVICE

TABLE OF CONTENTS

(This page filed under Transmittal No. 1)

ACCESS SERVICE

TABLE OF CONTENTS

(This page filed under Transmittal No. 1)

ACCESS SERVICE

TABLE OF CONTENTS

(This page filed under Transmittal No. 81)

ACCESS SERVICE

TABLE OF CONTENTS

Page No.

2. GENERAL REGULATIONS (Cont'd)

2.6 Definitions (Cont'd)

(This page filed under Transmittal No. 1)

TABLE OF CONTENTS

Certain material appearing on this page previously appeared on Original Page 7.

ACCESS SERVICE

TABLE OF CONTENTS

Page No.

2. GENERAL REGULATIONS (Cont'd)

2.6 Definitions (Cont'd)

Certain material previously appeared on this page now appearing on 1st Revised Page 6.

(This page filed under Transmittal No. 81)

ACCESS SERVICE

TABLE OF CONTENTS

Page No.

2. GENERAL REGULATIONS (Cont'd)

2.6 Definitions (Cont'd)

(This page filed under Transmittal No. 1)

ACCESS SERVICE

TABLE OF CONTENTS

(This page filed under Transmittal No. 1)

ACCESS SERVICE

TABLE OF CONTENTS

(This page filed under Transmittal No. 64)

ACCESS SERVICE

TABLE OF CONTENTS

(This page filed under Transmittal No. 1)

ACCESS SERVICE

TABLE OF CONTENTS

(This page filed under Transmittal No. 1)

ACCESS SERVICE

TABLE OF CONTENTS

(This page filed under Transmittal No. 1)

ACCESS SERVICE

TABLE OF CONTENTS

(This page filed under Transmittal No. 1)

ACCESS SERVICE

TABLE OF CONTENTS

(This page filed under Transmittal No. 1)

ACCESS SERVICE

TABLE OF CONTENTS

(This page filed under Transmittal No. 90)

ACCESS SERVICE

TABLE OF CONTENTS

(This page filed under Transmittal No. 35)

ACCESS SERVICE

TABLE OF CONTENTS

(This page filed under Transmittal No. 1)

ACCESS SERVICE

TABLE OF CONTENTS

(This page filed under Transmittal No. 89)

ACCESS SERVICE

TABLE OF CONTENTS

(This page filed under Transmittal No. 1)

ACCESS SERVICE

TABLE OF CONTENTS

(This page filed under Transmittal No. 1)

ACCESS SERVICE

TABLE OF CONTENTS

* Effective, January 11, 2002, BCS will no longer be available to customers. Grandfathered BCS Customers will maintain their existing service arrangement until their contract expires unless they choose to convert to another service. No changes to existing BCS service arrangements will be permitted, nor will any renewals be allowed.

This page filed under Transmittal No. 29)

TABLE OF CONTENTS

ACCESS SERVICE

TABLE OF CONTENTS

(This page filed under Transmittal No. 102)

ACCESS SERVICE

CONCURRING CARRIERS

NO CONCURRING CARRIERS

CONNECTING CARRIERS

NO CONNECTING CARRIERS

OTHER PARTICIPATING CARRIERS

NO OTHER PARTICIPATING CARRIERS

(This page filed under Transmittal No. 1)

ACCESS SERVICE

EXPLANATION OF SYMBOLS

C	-	To signify changed regulation
D	-	To signify discontinued rate or regulation
I	-	To signify increase
M	-	To signify matter relocated without change
N	-	To signify new rate or regulation
R		To signify reduction
S	-	To signify reissued matter
T	-	To signify a change in text but no change in rate or regulation
Z	-	To signify a correction

EXPLANATION OF ABBREVIATIONS

ac	-	alternating current
ALA	-	Access Line Arrangement
AML	-	Actual Measured Loss
ANI	-	Automatic Number Identification
AP	-	Program Audio
ATA	-	Access Trunk Arrangement
AT&T	-	American Telephone and Telegraph Company
BHMC	-	Busy Hours Minutes of Capacity
BSA	-	Basic Service Arrangement
BSE	-	Basic Service Element
Carot	-	Centralized Automatic Reporting on Trunks
CCC	-	Clear Channel Capability
CCS	-	Common Channel Signaling
CNCC	-	Customer Network Control Center
COCTX	-	Central Office Centrex
Cont'd	-	Continued
CPE	-	Customer Provided Equipment
CSACC	-	Customer Service Administration Control Center
Ctx	-	Centrex
DA	-	Digital Data Access
db	-	decibel
dBrnCO	-	Decibel Reference Noise C-Message Weighted O
dBy	-	decibel(s) relative to 1 volt
dc	-	direct current
EDD	-	Envelope Delay Distortion
ELEPL	-	Equal Level Echo Path Loss
EML	-	Expected Measured Loss
EPL	-	Echo Path Loss
ERL	-	Echo Return Loss
ESS	-	Electronic Switching System
ESSX	-	Electronic Switching System Exchange
f	-	frequency
F.C.C.	-	Federal Communications Commission
FI	-	Facility Interface
FID	-	Field Identifier
FX	-	Foreign Exchange
HC	-	High Capacity
Hz	-	Hertz

(This page filed under Transmittal No. 1)

ACCESS SERVICE

EXPLANATION OF ABBREVIATIONS

IC	-	Interstate Customer
ICB	-	Individual Case Basis
ICL	-	Insert & Connection Loss
ISDN	-	Integrated Services Digital Network
kbps	-	kilobits per second
kHz	-	kilohertz
LATA	-	Local Access and Transport Area
LDMTS	-	Long Distance Message Telecommunications Service(s)
Ma	-	milliamperes
Mbps	-	Megabits per second
MECAB	-	Multiple Exchange Carrier Access Billing
MECOD	-	Multiple Exchange Carrier Ordering and Design
MF	-	Multifrequency
MHz	-	Megahertz
MOU	-	Minutes of Use
MRC	-	Monthly Recurring Charge
MSA	-	Metropolitan Statistical Area (N)
NB	-	Narrowband
NPA	-	Numbering Plan Area
NRC	-	Nonrecurring Charge
NTS	-	Non-Traffic Sensitive
NXX	-	Three Digit Central Office Code
OTPL	-	Zero Transmission Level Point
PBX	-	Private Branch Exchange
PCM	-	Pulse Code Modulation
PI	-	Priority Installation
PLR	-	Private Line Ringdown
PR	-	Priority Restoration
rms	-	root-mean-square
RSM	-	Remote Switching Modules
RSS	-	Remote Switching Systems
SPOI	-	Signaling Point of Interface
SRL	-	Singing Return Loss
SSN	-	Switched Service Network
SS7	-	Signaling System Seven
STP	-	Signaling Transfer Point
SWC	-	Serving Wire Center
TES	-	Telephone Exchange Service(s)
TLP	-	Transmission Level Point
TNS	-	Transit Network Selection
TSP	-	Telecommunications Service Priority
TSPS	-	Traffic Service Position System
TV	-	Television
USOC	-	Uniform Service Order Code
VG	-	Voice Grade
V & H	-	Vertical & Horizontal
WA	-	Wideband Analog
WATS	-	Wide Area Telecommunications Service(s)
WD	-	Wideband Digital

(This page filed under Transmittal No. 43)

ACCESS SERVICE

NEVADA BELL/UNIFORM ONA SERVICE NAME CROSS REFERENCE

The following is a list of Nevada Bell's Open Network Architecture (ONA) Basic Service Elements (BSEs) which provides a mapping from the feature name utilized in this tariff to the industry standard feature name.

NEVADA BELL	UNIFORM ONA SERVICE NAME
Automatic Number Identification	Calling Billing Number Delivery-FG D Protocol
Hunt Group Arrangement	Multiline Hunt Group
Uniform Call Distribution Arrangement	Multiline Hunt Group - Uniform Call Distribution Line Hunting
Nonhunting Number for Use with Hunt Group or Uniform Cal1 Distribution Arrangement	Multiline Hunt Group - Individual Access to Each Port in Hunt Group
Call Transfer	Three Way Call Transfer
Availability and Stop Hunting Control Arrangement	Make Busy Key
Port Access to Verify Integrity of Subscriber Lines	Verify Integrity of Subscriber Lines
Direct Inward Dialing	Called Directory Number Delivery via DID
Answer Supervision - Lineside	Answer Supervision with a Lineside Interface

(This page filed under Transmittal No. 1)

ACCESS SERVICE

REFERENCE TO OTHER TARIFFS

Whenever reference is made in this tariff to other tariffs of the Telephone Company, the reference is to the tariffs in force as of the effective date of this tariff, and to amendments thereto and successive issues thereof.

REFERENCE TO TECHNICAL PUBLICATIONS

The following technical publications referenced in this tariff may be obtained from: Bell Communications Research, Inc., Customer Services, 60 New England Avenue, Piscataway, NJ 08854-4196.

Technical Reference:

PUB 41004 Issued: October, 1973	Available: October, 1973
PUB 62310 Issued: September, 1983	Available: October, 1983
PUB 62411 Issued: September, 1983	Available: October, 1983
PUB 62500 Issued: December, 1983	Available: March 15, 1984

(This page filed under Transmittal No. 1)

ACCESS SERVICE

REFERENCE TO TECHNICAL PUBLICATIONS (Cont'd)

TR-NPL-000334 Issued: January, 1986	Available: June, 1986
TR-NPL-000335 Issued: June, 1986	Available: June, 1986
TR-NPL-000336 Issued: October, 1987	Available: December, 1987
TR-NPL-000337 Issued: July, 1987	Available: July, 1987
TR-NPL-000338 Issued: December, 1986	Available: December, 1986
TR-NPL-000341 Issued: March, 1989	Available: March, 1989
TA-TSY-000342 Issued: March, 1990	Available: March, 1990
TR-TSV-000905 Issued: July 1989	Available: July 1, 1989
TR-NWT-000938 Issued: August, 1990	Available: August, 1990
TR TSV-000962 Issued: September, 1990	Available: September, 1990
TR EOP-000063, Issue No.3 Issued: September 1991	Available: September, 1991
GR-3334-CORE Issued: November, 1994	Available: November, 1994
GR-2936, Issue No. 2 Issued: December, 1996	Available: December, 1996
GR-253-CORE Issued: December, 1995	Available: December, 1995
GR-317-CORE, Issue 7 Issued: December, 2003	Available: December, 2003 (N)
GR-394-FORE, Issue 7 Issued: December, 2003	Available: December, 2003 (N)
TP-76200 MP Issued: December, 1998	Available: December, 1998
TP-76300 MP Issued: September, 1999	Available: September, 1999

(This page filed under Transmittal No. 81)

ACCESS SERVICE

REFERENCE TO TECHNICAL PUBLICATIONS (Cont'd)

The following Technical Publications are referenced in this tariff and may be obtained from the National Exchange Carrier Association, Inc., Director – Tariff Administration, 100 S. Jefferson Road, Whippany, NJ 07981 and the Federal Communications' Commercial Contractor. (M)

PUB AS No. 1
Issued: March, 1984 (M)

The following Ordering and Forum standards are referenced in this tariff and may be obtained from Bell Communications Research, Customer Services, 60 New England Ave., Piscataway, NJ 08854-4196:

Multiple Exchange Carrier Access Billing (MECAB)
Issued: November, 1987

Multiple Exchange Carrier Ordering and Design (MECOD)
Issued: November, 1987

Current issues of the following tariffs may be obtained from the Federal Communications Commission's commercial contractor: National Exchange Carrier Association Inc. Tariff F.C.C. Nos. 4 and 5.

The following technical publication is reference in this tariff and may be obtained from Pacific Bell, Information Exchange, 2600 Camino Ramon, Room 1S450, San Ramon, CA 94583.

PUB L-780085-PB
Issued: April, 1991

PUB L-780077-PB/NB
Issued: June, 1990

PUB L-780080-PB/NB
Issued: November, 1992 Available: November, 1992

PUBL-780079-PB
Issued: October 1993 Available: October, 1993

The following technical publication is referenced in this tariff and may be obtained from A T & T Development Manager, 295 North Maple Avenue, Room 6348G2, Basking Ridge, NJ 07920.

Technical Reference
TR 41454
Issued: December 1988

Certain material appearing on this page previously appeared on Original Page 28.

(This page filed under Transmittal No. 81)

REFERENCE TO TECHNICAL PUBLICATIONS (Cont'd)

The following publications are referenced in this tariff and may be obtained from: Nevada Bell, Collocation Services, Engineering, 645 E. Plumb Lane, Room C 244, Reno, NV 89502

Central Office Equipment Installation and Job Acceptance Handbook
Issued: November 1992 Available: November 1992

The Technical Reference can be obtained from: (N)
Www.sbc.com/public_affairs/regulatorydocuments/tariffs/1,5936,4480.html?pid+354
or The Telecordia Technologies Research Publication(s) can be obtained from 8 Corporate Place
Piscataway, New Jersey 08854

AM TR-NIS-000100, Ameritech LAN Interconnect Service-Token Ring Interface Specifications
Available: March, 2003

AM TR-NIS-000104, Ameritech LAN Interconnect Service –CSMA/CD Interface Specifications
Available: March, 2003

AM-TR-NIS-000111, Ameritech OC-3, OC-12, and OC-48 Service Interface Specifications
Available: March, 2003

AM-TR-TMO-000101, Ameritech Digital Service Transmission Parameters
Available: March, 2003

AM-TR-TMO-000080, Ameritech Service's Network Channel and Network Channel Interface Codes
Available: March, 2003

AM-TR-NIS-000096, Ameritech Technical Interfaces Specifications
Available: March, 2003

AM-TR-NIS-000107, (ESCON™)
Available: March, 2003

IBM SA22-7202-XX, IBM Documentation (ESCON™)
IBM SA22-0394-XX
Available: March, 2003

ANSI X3.T9.3, Fibre Channel (also includes FICON™ and ISC™)
ANSI/IEEE 802.3, Fast Ethernet
Available: March, 2003

IEEE 802.3x and z, Gigabit Ethernet
IEEE 802.3ae
Available: March, 2003

ANSI/SMPTE 259M, D1 Video
Available: March, 2003 (N)

(This page filed under Transmittal No. 35)

ACCESS SERVICE

(This page filed under Transmittal No. 1)

ACCESS SERVICE

1. Application of Tariff

1.1 This tariff contains regulations, rates and charges applicable to the provision of Carrier Common Line, End User Access, Switched Access, Special Access Services Lifeline Assistance and Universal Service Fund, and other miscellaneous services, hereinafter referred to collectively as service(s), provided by Nevada Bell, hereinafter referred to as the Telephone Company, to customers.

1.2 The provision of such services by the Telephone Company as set forth in this tariff does not constitute a joint undertaking with the customer for the furnishing of any service.

1.3 The operating territory of the Telephone Company is comprised of the locations set forth in 17. following for the state of Nevada.

1.4 Pursuant to the Commission's Rules at Section 69.4(c), 69.5(d), 69.104(1), 69.116, 69.117, 69.603(c), and 69.603(d), regulations concerning administration and billing of Lifeline Assistance and Universal Service Fund, rates and charges for these carrier's carrier elements are contained in Section 8 of the National Exchange Carrier Association, Inc., Tariff FCC No. 5. The National Exchange Carrier Association, Inc., will bill and collect all Lifeline Assistance and Universal Service Fund charges on behalf of the Telephone Company.

ACCESS SERVICE

(This page filed under Transmittal No. 43)

Page No.

2. GENERAL REGULATIONS (Cont'd)

(This page filed under Transmittal No. 81)

Page No. (N)

2. GENERAL REGULATIONS (Cont'd)

2.6 Definitions (Cont'd)

(This page filed under Transmittal No. 1)

Page No.

2. GENERAL REGULATIONS (Cont'd)

2.6 Definitions (Cont'd)

Certain material previously appeared on this page now appears on 1st Revised Page 2-5.

(This page filed under Transmittal No. 81)

Page No.

2. GENERAL REGULATIONS (Cont'd)

2.6 Definitions (Cont'd)

(This page filed under Transmittal No. 83)

Page No.

2. GENERAL REGULATIONS (Cont'd)

2.6 Definitions (Cont'd)

Certain material appearing on this page previously appeared on Original Page 2-5.

(This page filed under Transmittal No. 81)

2. General Regulations

2.1 Undertaking of the Telephone Company

2.1.1 Scope

(A) The Telephone Company does not undertake to transmit messages under this tariff.

(B) The Telephone Company shall be responsible only for the installation, operation and maintenance of the services which it provides.

(C) The Telephone Company will, for maintenance purposes, test its services only to the extent necessary to detect and/or clear troubles.

(D) Services are provided 24 hours daily, seven days per week, except as set forth in other applicable sections of this tariff.

2. General Regulations (Cont'd)

2.1 Undertaking of the Telephone Company (Cont'd)

2.1.2 Limitations

(A) The Customer may not assign or transfer the use of services provided under this tariff; however, where there is no interruption of use or relocation of the services, such assignment or transfer may be made to:

(1) another Customer, whether an individual, partnership, association or corporation, provided the assignee or transferee assumes all outstanding indebtedness for such services, and the unexpired portion of the minimum period and the termination liability applicable to such services, if any; or

(2) a court-appointed receiver, trustee or other person acting pursuant to law in bankruptcy, receivership, reorganization, insolvency, liquidation or other similar proceedings, provided the assignee or transferee assumes the unexpired portion of the minimum period and the termination liability applicable to such services, if any.

In all cases of assignment or transfer, the written acknowledgment of the Telephone Company is required prior to such assignment or transfer which acknowledgement shall be made within 15 days from the receipt of notification. All regulations and conditions contained in this tariff shall apply to such assignee or transferee.

The assignment or transfer of services does not relieve or discharge the assignor or transferee from remaining jointly or severally liable with the assignee or transferee for any obligations existing at the time of the assignment or transfer.

(B) The regulations for the installation, use and restoration of Telecommunications Service Priority (TSP) System service shall be in accordance with Part 64.401, Appendix A, of the Federal Communications Commission's Rules and subject to the regulations set forth in 10.8.1 (D) following.

2. General Regulations (Cont'd)

2.1 Undertaking of the Telephone Company (Cont'd)

2.1.2 Limitations (Cont'd)

(C) Subject to compliance with the rules mentioned in (B) preceding, the services offered herein will be provided to customers on a first-come, first-served basis.

2.1.3 Liability

(A) The Telephone Company's liability, if any, for its willful misconduct is not limited by this tariff. With respect to any other claim or suit, by a customer, End User or by any others, for damages associated with the installation, provision, termination, maintenance, repair or restoration of service, preemption, and subject to the provisions of (B) through (H) following, the Telephone Company's liability shall not exceed an amount equal to the proportionate charge for the service for the period during which the service was affected. This liability for damages shall be in addition to any amounts that may otherwise be due the customer or End User under this tariff as a Credit Allowance for a Service Interruption.

(B) The Telephone Company shall not be liable for any act or omission of any other carrier or customer providing a portion of a service, nor shall the Telephone Company for its own act or omission hold liable any other carrier or customer providing a portion of a service.

(C) The Telephone Company shall not be liable for any act or omission concerning the implementation of Presubscription as set forth in 13. following, except as indicated in 2.1.3(A) preceding.

(This page filed under Transmittal No. 1)

2. General Regulations (Cont'd)

2.1 Undertaking of the Telephone Company (Cont'd)

2.1.3 Liability (Cont'd)

(D) The Telephone Company is not liable for damages to the customer premises resulting from the furnishing of a service, including the installation and removal of equipment and associated wiring, unless the damage is caused by the Telephone Company's negligence.

(E) The Telephone Company shall be indemnified, defended and held harmless by the end user against any claim, loss or damage arising from the end user's use of services offered under this tariff, involving:

(1) Claims for libel, slander, invasion of privacy, or infringement of copyright arising from the end user's own communications;

(2) Claims for patent infringement arising from the end user's acts combining or using the service furnished by the Telephone Company in connection with facilities or equipment furnished by the end user or IC or;

(3) All other claims arising out of any act or omission of the end user in the course of using services provided pursuant to this tariff.

2. General Regulations (Cont'd)

2.1 Undertaking of the Telephone Company (Cont'd)

2.1.3 Liability (Cont'd)

(F) The Telephone Company shall be indemnified, defended and held harmless by the IC against any claim, loss or damage arising from the IC's use of services offered under this tariff, involving:

(1) Claims for libel, slander, invasion of privacy, or infringement of copyright arising from the IC's own communications;

(2) Claims for patent infringement arising from the IC's acts combining or using the service furnished by the Telephone Company in connection with facilities or equipment furnished by the end user or IC or;

(3) All other claims arising out of any act or omission of the IC in the course of using services provided pursuant to this tariff.

(G) The Telephone Company does not guarantee or make any warranty with respect to its services when used in an explosive atmosphere. The Telephone Company shall be indemnified, defended and held harmless by the customer from any and all claims by any person relating to such customer's use of services so provided.

2. General Regulations (Cont'd)

2.1 Undertaking of the Telephone Company (Cont'd)

2.1.3 Liability (Cont'd)

(H) No license under patents (other than the limited license to use) is granted by the Telephone Company or shall be implied or arise by estoppel, with respect to any service offered under this tariff. The Telephone Company will defend the customer against claims of patent infringement arising solely from the use by the customer of services offered under this tariff and will indemnify such customer for any damages awarded based solely on such claims.

(I) The Telephone Company's failure to provide or maintain services under this tariff shall be excused by labor difficulties, governmental orders, civil commotions, criminal actions taken against the Telephone Company, acts of God and other circumstances beyond the Telephone Company's reasonable control, subject to the Credit Allowance for a Service Interruption as set forth in 2.4.4 following.

ACCESS SERVICE

2. General Regulations (Cont'd)

2.1 Undertaking of the Telephone Company (Cont'd)

2.1.4 Provision of Services

The Telephone Company, to the extent that such services are or can be made available with reasonable effort, and after provision has been made for the Telephone Company's Telephone Exchange Services, will provide to the customer upon reasonable notice services offered in other applicable sections of this tariff at rates and charges specified therein.

2.1.5 Installation and Termination of Services

(A) For All Services Except Expanded Interconnection Service

The Access Services provided under this tariff (A) will include any entrance cable or drop wiring and wire or intrabuilding cable to that point where provision is made for termination of the Telephone Company's outside distribution network facilities at a suitable location inside a customer-designated premises and (B) will be installed by the Telephone Company to such Point of Termination. Access Service is provided with one Point of Termination per customer premises. At the customer's request, the Telephone Company will provide additional Points of Termination at an additional charge. The charge for additional Points of Termination will include the cost of additional materials and labor. The labor rates, as set forth in 13.1.1 and 13.2.6(C), apply. The Point of Termination is an inherent part of Switched and Special Access Services, therefore, the preceding does not preclude the customer's ability to have the Point of Termination moved as set forth in 6.7.5 and 7.2.3 following for Switched and Special Access Services, respectively.

(B) Expanded Interconnection Service

The Expanded Interconnection Service provided for under this tariff will include the connection of EIS Channel Termination as described in Section 18 following, for the Telephone Company provided Switched or Special Access Service, as described in Section 6 or 7 following, to Collocator-provided transmission equipment.

2.1.6 Maintenance of Services

The services provided under this tariff shall be maintained by the Telephone Company. The customer or others may not rearrange, move, disconnect, remove or attempt to repair any facilities provided by the Telephone Company other than by connection or disconnection to any interface means used except with the written consent of the Telephone Company. Customer owned inside wire maintenance is the customer's responsibility, but may be maintained by the Telephone Company at the customer's request, on a deregulated basis. When trouble on an Access Service is caused by facilities, equipment or wiring owned by the customer, a charge will apply on a deregulated basis. (N) (N)

(This page filed under Transmittal No. 104)

2. General Regulations (Cont'd)

2.1 Undertaking of the Telephone Company (Cont'd)

2.1.7 Changes and Substitutions

Except as provided for equipment and systems subject to F.C.C. Part 68 regulations at 47 C.F.R. 5 68.110(b), the Telephone Company may, where such action is reasonably required in the operation of its business, (A) substitute, change or rearrange any facilities used in providing service under this tariff, including but not limited to, (1) substitution of different metallic facilities, (2) substitution of carrier or derived facilities for metallic facilities used to provide other than metallic facilities and (3) substitution of metallic facilities for carrier or derived facilities used to provide other than metallic facilities, (B) change minimum protection criteria, change operating or maintenance characteristics of facilities or (D) change operations or procedures of the Telephone Company. In case of any such substitution, change or rearrangement, the transmission parameters will be within the range as set forth in 6. and 7. following. The Telephone Company shall not be responsible if any such substitution, change or rearrangement renders any customer furnished services obsolete or requires modification or alteration thereof or otherwise affects their use or performance. If such substitution, change or rearrangement materially affects the operating characteristics of the facility, the Telephone Company will provide reasonable notification to the customer in writing. Reasonable time will be allowed for any redesign and implementation required by the change in operating characteristics. The Telephone Company will work cooperatively with the customer to determine reasonable notification requirements.

ACCESS SERVICE

2. General Regulations (Cont'd)

2.1 Undertaking of the Telephone Company (Cont'd)

2.1.8 Refusal and Discontinuance of Service

The Telephone Company may refuse additional applications for (C)
service or discontinue the provision of services as set forth in (C)
2.1.8(A)(1) and 2.1.8(A)(2) following, unless the provisions of (C)
2.2.2(B) (Interference or Impairment)or 2.5 (Connections) following (T)
apply, when the customer fails to comply with: (T)

- 2.1.6 (Maintenance of Service), (T)
- 2.2.3 (Unlawful and Abusive Use),
- 2.3.1 (Damages),
- 2.3.6 (Availability for Testing),
- 2.3.7 (Balance) (T)
- 2.3.14 (Jurisdictional Reports), or (N)
- 2.4 (Payment Arrangements and Credit Allowances)- including (T)
  any payments to be made by the customer on the dates and (T)
  times herein specified. (T)

(A) The Telephone Company may initiate any or all of the actions (N)
described in 2.1.8(A)(1) and 2.1.8(A)(2) on fifteen (15)
calendar days written notice for failure to comply with the
bill payment provisions in 2.4.1 if:

(i) the Telephone Company has sent the subject bill to the customer within seven (7) business days of the bill date; or

(ii) the Telephone Company has sent the subject bill to the customer more than thirty (30) calendar days before notice under this section is given. (N)

The 15 day notice will be made by Overnight Delivery to the (C)
person designated by that customer to receive such notices of
noncompliance, such notice period to start the day after the (T)
notice is sent. (T)

For all other compliance failures not qualifying for 15 day (N)
notice, the Telephone Company will give thirty (30) calendar
days written notice by Overnight Delivery or Certified U.S.
Mail (return receipt requested) to the person designated by
that customer to receive such notices of noncompliance, such
notice period to start the day after the notice is sent. The
Telephone Company will maintain records sufficient to validate
the date upon which a bill was sent to a customer.

Overnight Delivery under this section shall be performed by a
reputable carrier such as the U.S. Postal Service Express Mail,
Airborne, United Parcel Service, or Federal Express. (N)

(1) Refuse additional applications for service and/or refuse to (T)
complete any pending orders for service by the noncomplying
customer at anytime thereafter. The Telephone Company may (N)
also refuse to accept and process any requests from end
users or from the customer to designate that customer as the
end user's Primary Interexchange Carrier (PIC), as described
in Section 13.3.3, following. (N)

Certain material previously appearing on this page now appears on 5th Revised Page 2-15.
(This page filed under Transmittal No. 97)

ACCESS SERVICE

2. General Regulations (Cont'd)

2.1 Undertaking of the Telephone Company (Cont'd)

2.1.8 Refusal and Discontinuance of Service (Cont'd)

(A) (Cont'd) (N)

(1) (Cont'd)

If an end user contacts the Telephone Company to designate the customer as the end user's PIC, the end user will be given the choice of either remaining with the end user's existing PIC or selecting a new PIC other than the customer. If the Telephone Company does (N)
not refuse additional applications for service or PIC (C)
changes to the customer on the date specified in the (C)
fifteen (15) or thirty (30) days notice, and the (C)
customer's noncompliance continues, nothing contained (M)
herein shall preclude the Telephone Company's right to (M)
refuse additional applications for service to the (M)
noncomplying customer or PIC changes to the customer (C)
without further notice. (M)
(D)

(D)

Certain material appearing on this page previously appeared on 4th Revised Page 2-14
Certain material previously appearing on this page now appears on 4th Revised Page 2-15.1.

(This page filed under Transmittal No. 97)

2. General Regulations (Cont'd) (N)

2.1 Undertaking of the Telephone Company (Cont'd)

2.1.8 Refusal and Discontinuance of Service (Cont'd)

(A) (Cont'd)

(2) Discontinue the provision of the services to the noncomplying customer. If the Telephone Company discontinues service, it will no longer route any switched access traffic that uses the customer's Carrier Identification Code(s) (CIC). In the case of (N) such discontinuance, all applicable charges, including (C) termination charges, shall become due. If the (C) Telephone Company does not discontinue the provision of the services involved on the date specified in the (C) notice and the customer's noncompliance continues, nothing contained herein shall preclude the Telephone Company's right to discontinue the provision of the services to the noncomplying customer without further notice.

The Telephone Company will not initiate any of the (N) actions described in paragraphs (1) and (2) above as to disputed bill amounts where the customer does not pay disputed bill amounts by the bill due date as specified in Section 2.4.1(B)(1), (2), (3)(a) and (b), and the Telephone Company has not rendered a decision on the dispute. The dispute process is outlined in 2.4.1(B)(3)(c), (d), and (e).

(B) When access service is provided by more than one telephone company, the companies involved in providing the joint service may individually or collectively deny service to a customer for nonpayment. Where the telephone companies affected by the nonpayment are incapable of effecting discontinuance of service without cooperation from the other joint providers of Switched Access Service, such other telephone companies will, if technically feasible, assist in denying the joint service to the customer. Service denial for such joint service will only include calls which originate or terminate within, or transit, the operating territory of the telephone companies initiating the service denial for nonpayment. When more than one of the joint providers must deny service to effectuate termination for nonpayment, in cases where a conflict exists in the applicable tariff provisions, the tariff regulations of the telephone company where the customer end office is located shall prevail for joint service discontinuance provisions. (N)

Revised material appearing on this page previously appeared on 4th Revised Page 2-15.

(This page filed under Transmittal No. 97)

2. General Regulations (Cont'd)

2.1 Undertaking of the Telephone Company (Cont'd)

2.1.9 Limitation of Use of Metallic Facilities

(A) Signals applied to a metallic facility shall conform to the limitations set forth in Technical Reference Publication AS No. 1. In the case of application of dc telegraph signaling systems, the customer shall be responsible, at its expense, for the provision of current limiting devices to protect the Telephone Company facilities from excessive current due to abnormal conditions and for the provision of noise mitigation networks when required to reduce excessive noise.

ACCESS SERVICE

2. General Regulations (Cont'd)

2.1 Undertaking of the Telephone Company (Cont'd)

2.1.10 Notification of Service-Affecting Activities

The Telephone Company will provide the customer reasonable notification of service-affecting activities that may occur in normal operation of its business. Such activities may include but are not limited to, equipment or facilities additions, removals or rearrangements, routine preventative maintenance and major switching machine change-out. Generally, such activities are not individual customer service specific, they affect many customer services. No specific advance notification period is applicable to all service activities. The Telephone Company will work cooperatively with the customer to determine the notification requirements.

2.1.11 Coordination with Respect to Network Contingencies

The Telephone Company intends to work cooperatively with the customer to develop network contingency plans in order to maintain maximum network capability following natural or man-made disasters which affect telecommunications services.

2.1.12 Provision and Ownership of Telephone Numbers

The Telephone Company reserves the reasonable right to assign, designate or change telephone numbers, or any other call number designations associated with Access Services, or the Telephone Company serving central office prefixes associated with such numbers, when necessary in the conduct of its business. Should it become necessary to make a change in such number(s), the Telephone Company will furnish to the customer reasonable notice, by Certified U.S. Mail of the effective date and an explanation of the reason(s) for such change(s).

2.1.13 Metropolitan Statistical Area Access Services (N)

For the Metropolitan Statistical Areas (MSAs) in which the Telephone Company has received Phase II pricing flexibility, pursuant to Subpart H of Part 69 of the Commission's Rules. Section 22 of this Tariff governs the offering of service in these MSAs. Upon approval of Phase II pricing flexibility for a petitioned MSA, services purchased via Sections 6, 7, 20, 30 and 32, under the various Pricing Plans as identified in Section 22.4(F), will then become subject to the regulations in Section 22, Metropolitan Statistical Area Access Services. (N)

2.2 Use

2.2.1

(A)

(B)

(This page filed under Transmittal No. 43)

2. General Regulations (Cont'd)

2.2 Use (Cont'd)

2.2.2 Interference or Impairment

(A) The characteristics and methods of operation of any circuits, facilities or equipment provided by other than the Telephone Company and associated with the facilities utilized to provide services under this tariff shall not interfere with or impair service over any facilities of the Telephone Company, its affiliated companies, or its connecting and concurring carriers involved in its services, cause damage to their plant, impair the privacy of any communications carried over their facilities or create hazards to the employees of any of them or the public.

2. General Regulations (Cont'd)

2.2 Use (Cont'd)

2.2.2 Interference or Impairment (Cont'd)

(B) Except as provided for equipment or systems subject to the F.C.C Part 68 rules in 47 C.F.R. S 68.108, if such characteristics or methods of operation are not in accordance with (A) preceding, the Telephone Company will, where practicable, notify the customer that temporary discontinuance of the use of a service may be required; however, where prior notice is not practicable, nothing contained herein shall be deemed to preclude the Telephone Company's right to temporarily discontinue forthwith the use of a service if such action is reasonable under the circumstances. In case of such temporary discontinuance, the customer will be promptly notified and afforded the opportunity to correct the condition which gave rise to the temporary discontinuance. During such period of temporary discontinuance, credit allowance for service interruptions as set forth in 2.4.4(A) and (B) following is not applicable.

2.2.3 Unlawful Use

The service provided under this tariff shall not be used for an unlawful purpose.

2.3 Obligations of the Customer

2.3.1 Damages

The customer shall reimburse the Telephone Company for damages to Telephone Company facilities utilized to provide services under this tariff caused by the negligence or willful act of the customer or resulting from the customer's improper use of the Telephone Company facilities, or due to malfunction of any facilities or equipment provided by other than the Telephone Company. Nothing in the foregoing provision shall be interpreted to hold one customer liable for another customer's actions. The Telephone Company will, upon reimbursement for damages, cooperate with the customer in prosecuting a claim against the person causing such damage and the customer shall be subrogated to the right of recovery by the Telephone Company for the damages to the extent of such payment.

2. General Regulations (Cont'd)

2.3 Obligations of the Customer (Cont'd)

2.3.2 Ownership of Facilities and Theft

Facilities utilized by the Telephone Company to provide service under the provisions of this tariff shall remain the property of the Telephone Company. Such facilities shall be returned to the Telephone Company by the customer, whenever requested, within a reasonable period following the request in as good condition as reasonable wear will permit.

2.3.3 Equipment Space and Power

The customer shall furnish or arrange to have furnished to the Telephone Company, at no charge, equipment space and electrical power required by the Telephone Company to provide services under this tariff at the points of termination of such services. The selection of ac or dc power shall be mutually agreed to by the customer and the Telephone Company. The customer shall also make necessary arrangements in order that the Telephone Company will have access to such spaces at reasonable times for installing, testing, repairing or removing Telephone Company services.

2.3.4

2.3.5

2. General Regulations (Cont'd)

2.3 Obligations of the Customer (Cont'd)

2.3.6 Availability for Testing

The services provided under this tariff shall be available to the Telephone Company at times mutually agreed upon in order to permit the Telephone Company to make tests and adjustments appropriate for maintaining the services in satisfactory operating condition. Such tests and adjustments shall be completed within a reasonable time. No credit will be allowed for any interruptions involved during such tests and adjustments.

2.3.7 Balance

All signals for transmission over the services provided under this tariff shall be delivered by the customer balanced to ground except for ground-start, duplex (DX) and McCulloh-Loop (Alarm System) type signaling and dc telegraph transmission at speeds of 75 baud or less

2.3.8 Design of Customer Services

Subject to the provisions of 2.1.7 preceding, the customer shall be solely responsible, at its own expense, for the overall design of its services and for any redesigning or rearrangement of its services which may be required because of changes in facilities, operations, or procedures of the Telephone Company, minimum protection criteria, or operating or maintenance characteristics of the facilities.

2. General Regulations (Cont'd)

2.3 Obligations of the Customer (Cont'd)

2.3.9 References to the Telephone Company

The customer may advise End Users that certain services are provided by the Telephone Company in connection with the service the customer furnishes to End Users; however, the customer shall not represent that the Telephone Company jointly participates in the customer's services.

2.3.10

2.3.11 Claims and Demands for Damages

(A) With respect to claims of patent infringement made by third persons, the customer shall defend, indemnify, protect and save harmless the Telephone Company from and against all claims arising out of the combining with, or use in connection with, the services provided under this tariff, any circuit, apparatus, system or method provided by the customer.

(B) The customer shall defend, indemnify and save harmless the Telephone Company from and against any suits, claims, losses or damages, including attorney fees and court costs by third persons arising out of the construction, installation, operation, maintenance, or removal of the customer's circuits, facilities, or equipment connected to the Telephone Company's services provided under this tariff, including, without limitation, Workmen's Compensation claims, actions for infringement of copyright and/or unauthorized use of program material, libel and slander actions based on the content of communications transmitted over the customer's circuits, facilities or equipment, and proceedings to recover taxes, fines, or penalties for failure of the customer to obtain or maintain

2. General Regulations (Cont'd)

2.3 Obligations of the Customer (Cont'd)

2.3.11 Claims and Demands for Damages (Cont'd)

(B) (Cont'd)

in effect any necessary certificates, permits, licenses, or other authority to acquire or operate the services provided under this tariff; provided, however, the foregoing indemnification shall not apply to suits, claims, and demands to recover damages for damage to property, death, or personal injury unless such suits, claims or demands are based on the tortuous conduct of the customer, its officers, agents or employees.

(C)

(D) The customer shall defend, indemnify and save harmless the Telephone Company from and against any suits, claims, losses or damages, including punitive damages, attorney fees and court costs by the customer or third parties arising out of any act or omission of the customer in the course of using services provided under this tariff.

2.3.12

(This page filed under Transmittal No. 1)

2. General Regulations (Cont'd)

2.3 Obligations of the Customer (Cont'd)

2.3.13 Coordination with respect to Network Contingencies

The customer shall, in cooperation with the Telephone Company, coordinate in planning the actions to be taken to maintain maximum network capability following natural or man-made disasters which affect telecommunications services.

2.3.14 Jurisdictional Reports Requirements

Where the customer orders new trunks that augment an existing trunk group that carries both interstate and intrastate traffic and the PIU is determined from the actual call detail, the PIU applied to the provisioning and billing of the new trunks requested by the customer will also be determined from the actual call detail for the entire trunk group. In such instances, the Access Service Request used by the customer to order the new trunks cannot reflect a PIU of 100%.

(A) Jurisdictional Reports

(1) (a) When a customer orders Directory Assistance Service, an Access Line Arrangement (ALA) or Feature Group A and/or an Access Trunk Arrangement 950 (ATA950) or Feature Group B Switched Access Service the customer shall state in writing the projected interstate percentage for interstate usage for each ALA or Feature Group A and/or ATA950 or Feature Group B Switched Access Service ordered. If the customer discontinues some but not all the ALA or Feature Group A and/or ATA950 or Feature Group B Switched Access Services in a group, it shall provide the projected interstate percentage for the services which are not discontinued.

(b) The project interstate percentages will be used by the Telephone Company to apportion the usage between interstate and intrastate until a revised report with adjusted raw data is received as set forth in (6) following.

2. General Regulations (Cont'd)

2.3 Obligations of the Customer (Cont'd)

2.3.14 Jurisdictional Report Requirements (Cont'd)

(A) Jurisdictional Reports (Cont'd)

(2) All single ALA or Feature Group A and ATA950 or Feature Group B Switched Access Service usage and charges will be apportioned by the Telephone Company between interstate and intrastate. The projected interstate percentage reported as set forth in (1) (a) and (1) (b) preceding will be used to make the apportionment.

(3) For multiline hunt group or trunk group arrangements where either the interstate or the intrastate charges are based on measured usage, the interstate ALA or Feature Group A and/or ATA950 or Feature Group B Switched Access Service(s) information reported as set forth in (1) preceding will be used to determine the charges. For all groups, the number of access minutes (either the measured minutes or the assumed minutes) for a group will be multiplied by the projected interstate percentage to develop the interstate access minutes. The number of access minutes for the group minus the developed interstate access minutes for the group will be the developed intrastate access minutes.

2. General Regulations (Cont'd)

2.3 Obligations of the Customer (Cont'd)

2.3.14 Jurisdictional Report Requirements (Cont'd)

(A) Jurisdictional Reports (Cont'd)

(4) When a customer orders an Access Trunk Arrangement Non Equal Access(ATANEA) or Feature Group C, or an Access Trunk Arrangement 1OXXX (ATAXXX) or Feature Group D or 500, 700, 900, Toll Free Access Service or FGD terminating Switched Access Service(s), the customer may declare a PIU as described in (A)(6)(C) following. If the customer elects not to provide 500, 700, 900, Toll Free Access Service or FGD terminating PIU factors, the Telephone Company, where the jurisdiction can be determined from the call detail, will determine the projected interstate percentage as follows. For originating access minutes, the projected interstate percentage will be developed on a monthly basis by end office when the ATANEA or Feature Group C, ATAXXX or Feature Group D, 500, 700, 900 or Toll Free Switched Access Service access minutes are measured by dividing the measured interstate originating access minutes (the access minutes where the calling number is in one state and the called number is in another state) by the total originating access minutes when the call detail is adequate to determine the appropriate jurisdiction.

For terminating access minutes including Directory Assistance Service, the data used by the Telephone Company to develop the projected interstate percentage for originating access minutes will be used to develop projected interstate percentage for such terminating access minutes. When originating call details are insufficient to determine the jurisdiction for the call, the customer shall supply the projected interstate percentage or authorize the Telephone Company developed percentage. This percentage shall be used by the Telephone Company as the interstate percentage for such call detail. The Telephone Company will designate the number obtained by subtracting the projected interstate percentage for originating and terminating access minutes calculated by the Telephone Company from 100 (100 - Telephone Company calculated projected interstate percentage = intrastate percentage) as the projected intrastate percentage of use.

(This page filed under Transmittal No. 1)

2. General Regulations (Cont'd)

2.3 Obligations of the Customer (Cont'd)

2.3.14 Jurisdictional Report Requirements (Cont'd)

(A) Jurisdictional Reports (Cont'd)

All Switched Access DNAL BSA rates and charges will be apportioned by the Telephone Company between interstate and intrastate based upon the PIU provided by the customer. Rules and regulations for PIUs for Access Line and Access Trunk Arrangements are set forth in Section 2.3.14 following.

ACCESS SERVICE

2. General Regulations (Cont'd)

2.3 Obligations of the Customer (Cont'd)

2.3.14 Jurisdictional Report Requirements (Cont'd)

(A) Jurisdictional Reports (Cont'd)

(5)

(6) (a) Except where Telephone Company measured access minutes are used as set forth in (4) preceding, the customer reported or interstate percentage of use as set forth in (1), (4), or (7) preceding will be used until the customer reports in writing a different number of lines or trunks or a different projected interstate percentage for an in service end office interstate use. The revised report will serve as the basis for future billing and will be effective on the next bill date. No prorating or back billing will be done based on the report.

(b) Pursuant to Federal Communications Commission order FCC 85-145 adopted April 16, 1985 interstate usage is to be developed as though every call that enters a customer network at a point within the same state as that in which the called station (as designated by the called station number) is situated is an

(This page filed under Transmittal No. 1)

2. General Regulations (Cont'd)

2.3 Obligations of the Customer (Cont'd)

2.3.14 Jurisdictional Report Requirements (Cont'd)

(A) Jurisdictional Reports (Cont'd)

(6) (b) (Cont'd)

intrastate communication and every call for which the point of entry is a state other than that where the called station (as designated by the called station number) is situated is an interstate communication.

(c) The customer shall provide in writing to the Telephone Company the Percent Interstate Usage (PIU) no more than once every three months. At the customer's option, the PIU provided can be on a state or LATA basis as described in 2.3.14(A)(1),(2) and (3) preceding. When submitting the PIU, the customer will, upon request from the Telephone Company, include a summary sheet explaining how the PIU was determined. The customer should calculate its PIU based on the call detail records it uses to bill its customers. The customer may use a reasonable sampling method. If the customer uses data for less than one month to determine the PIU given to the Telephone Company, the supporting summary sheet should explain why less than one month's data has been used and whether the data provided is that which the customer uses to make its internal traffic forecasts and networking decisions. They must explain to the Telephone Company why and if they use the same data for their billing purposes. When a revised PIU varies by more than five percentage points from the last reported PIU, the summary sheet should include an explanation. The customer shall retain for six months the data used in calculating the PIU given to the Telephone Company. Adjustment factors may be applied in the calculation of PlUs only if the factor has been objectively determined based on statistically reliable, Nevada specific data.

2. General Regulations (Cont'd)

2.3 Obligations of the Customer (Cont'd)

2.3.14 Jurisdictional Report Requirements (Cont'd)

(7) Entrance Facilities (EF), Expanded Interconnection Service Channel Termination (EISCT), Direct Trunked Transport (DTT) and Tandem Switched Transport

(a) When a customer orders a new Entrance Facility and/or Direct Trunked Transport for the provision of Switched Access lines or trunks, the customer shall provide in writing a single PIU factor known as a Facility PIU, to the Telephone Company, that will be used for the billing related to provisioning of nonrecurring charges as well as monthly recurring rates associated with those facilities.

(b) Unassigned channels of the Entrance Facility, EISCT or Direct Trunked Transport will reflect the Facility PIU provided by the customer as described in (7)(a) preceding. The Telephone Company will accept the facility PIU in writing as described in (A)(6)(C) preceding or will accept a PIU as provided on the access service request. In the event the customer provides both a Facility PIU in writing and a stated PIU on the access service request, the PIU provided in writing will take precedence.

(c) When a customer orders Switched Access lines or trunks, in conjunction with Entrance Facilities or EISCT and Direct Trunked Transport, the PIU factor as escribed in (A)(1),(4) and (7)(a&b) preceding will apply.

(d) When a customer orders Switched Access Services that are routed through an access tandem, the PIU will reflect the PIU factor as described in (A)(1),(4) and (7).

(e) Switched Access lines or trunks which terminate in an End Office of another Exchange Telephone Company, and are assigned to an Entrance Facility, EISCT or Direct Trunked Transport, will reflect the PIU factor as described in (1) and (7)(a) preceding.

2. General Regulations (Cont'd)

2.3 Obligations of the Customer (Cont'd)

2.3.14 Jurisdictional Report Requirements (Cont'd)

(B) Jurisdictional Report Verification

If the Telephone Company disputes the reasonableness of the PIU provided as described in (A)(6) above or a regulatory commission questions the projected interstate percentage, the Telephone Company will ask the customer to provide the data as described in (A)(6) above that the customer used to determine the projected interstate percentage. The customer shall supply the data within 15 days of the Telephone Company request. The customer shall keep records of call detail from which the percentage of interstate and intrastate use can be ascertained and upon request of the Telephone Company make the records available for inspection as reasonably necessary for purposes of verification of the percentages.

If the Telephone Company wishes to audit a PIU it must request an audit within six months of having received the PIU. The audit would be limited to examination of billing tapes used in calculating the PIU and verification that the tapes accurately represent the carrier's traffic.

(C) Maintenance of Customer Records

For purposes of determining PIU, every call that enters a customer switched network at a point within the same state as that in which the called station (as designated by the called station number) is situated, is an intrastate communication, and every call for which the point of entry to the customer switched network is in a state other than that where the called station (as designated by the called station number) is situated is an interstate communication.

2. General Regulations (Cont'd)

2.3 Obligations of the Customer (Cont'd)

2.3.15 Determination of Interstate Charges for Mixed Interstate and Intrastate Access Service

When mixed interstate and intrastate Access Service is provided, all charges (i.e., nonrecurring, monthly and/or usage) including optional features charges, will be prorated between interstate and intrastate. Monthly recurring charges and nonrecurring charges for FGD will be billed based upon an aggregate percent of interstate use (PIU) determined from all traffic for that end office or tandem, as set forth in Section 2.3.14 preceding. The percentage provided in the reports as set forth in 2.3.14(A) preceding will serve as the basis for prorating the charges. The percentage of an Access Service to be charged as interstate is applied in the following manner:

(A) For monthly and nonrecurring chargeable rate elements, multiply the percent interstate use times the quantity of chargeable elements times the stated tariff rate per element.

(B) For usage sensitive chargeable rate elements, multiply the percent interstate use times actual use (i.e., measured or Telephone Company assumed average use) times the stated tariff rate.

The interstate percentage will change as revised usage reports are submitted as set forth in 2.3.14 preceding.

2.3.16 Certification of Special Access Services As Interstate

(A) Interstate Classification Requirement

Pursuant to Federal Communications Commission Order FCC 89-224 adopted June 29, 1989 and released July 20, 1989, Special Access Services are to be classified as interstate when the services carry more than a de minimis amount of interstate traffic. Interstate traffic is deemed de minimis when the interstate traffic amounts to ten percent (10%) or less of the total traffic on a Special Access Service.

(This page filed under Transmittal No. 1)

2. General Regulations (Cont'd)

2.3 Obligations of the Customer (Cont'd)

2.3.16 Certification of Special Access Services As Interstate (Cont'd)

(B) Certification Requirement

When a customer orders a new Special Access Service the customer shall certify, in its order, that the Special Access Service carries interstate traffic and the interstate traffic is more than ten percent (10%) of the total traffic carried on the Special Access Service.

For existing Special Access services, or at any time the customer issues an order to change, rearrange, add or disconnect Special Access services to its existing network, or rearranges its network in any way that would affect the jurisdiction of traffic over its network, it is the responsibility of the customer to estimate the jurisdictional usage of each Special Access Service to determine if the traffic is more than 10% of the total traffic on that service.

2. General Regulations (Cont'd)

2.3 Obligations of the Customer (Cont'd)

2.3.16 Certification of Special Access Services As Interstate (Cont'd)

(B) Certification Requirement

- If the customer's estimate of interstate traffic of the service involved constitutes 10% or less of the total traffic on that service, the service will be provided in accordance with the applicable rules and regulations of the appropriate intrastate tariff. The customer must certify to the Telephone Company this change of jurisdiction via a service order. A change of jurisdiction is considered an administrative change and no charge shall apply, as set forth in Section 7.2.2 following.

- If the customer determines within ninety (90) days of the effective date of this revision that the estimate of interstate traffic on a Special Access contract arrangement constitutes 10% or less of the total traffic on that service, the service will be provided in accordance with the applicable rules and regulations of the appropriate intrastate tariff. The customer must certify to the Telephone Company this change of jurisdiction via a service order. A change of jurisdiction is considered an administrative change and no charge shall apply, as set forth in Section 7.2.2 following. In addition, no Termination Liability Charge shall apply to the interstate contract arrangement due to a change of jurisdiction.

- If the customer's estimate of interstate traffic on the service involved constitutes more than 10% of the total traffic on that service, the service will be provided in accordance with the applicable rules and regulations of this tariff.

ACCESS SERVICE

2. General Regulations (Cont'd)

2.3 Obligations of the Customer (Cont'd)

2.3.16 Certification of Special Access Services As Interstate (Cont'd)

(C) Verification Information

If a billing dispute arises or a regulatory commission questions the interstate certification for the Special Access Service, the Telephone Company will ask the customer to provide the general information on system design and functionality it uses to determine that the Special Access Service interstate traffic is more than ten percent (10%) of the total traffic carried on the Special Access Service. If the customer has usage information or usage studies which it uses to verify the interstate traffic, the customer shall supply the studies when requested by the Telephone Company not to exceed once per year. The customer shall supply the data within 30 days of the Telephone Company request. (D)

(D)

(This page filed under Transmittal No. 97)

2. General Regulations (Cont'd) (N)

2.4 Payment Arrangements and Credit Allowances

2.4.1 Payment of Rates, Charges and Deposits

To protect itself from the risk of non-payment, the Telephone Company may require a customer to provide a cash deposit in those instances specified in 2.4.1(A) below.

(A) There is a proven history of late payments or the customer has not demonstrated established credit. A proven history of late payments is defined as 2 or more occasions within the preceding 12 months in which payment(s) for the undisputed charges of that month's total billings (sum of all bills sent in that month for all accounts for all services provided under this tariff by the Telephone Company) was

(1) not received within 3 business days following the payment due date and
(2) the payment(s) not received within 3 business days represented at least 10% of the month's total billings for all accounts for all services provided under this tariff by the Telephone Company.

Example for January 2005 billings:

Assume:
$100 payment for a January billing received on the due date
$100 payment for a January billing received 1 business day late
$100 payment for a January billing received 4 business days late

Total January billings for all accounts for all services provided under this tariff by the Telephone Company sum to $300. There are no disputes.

One payment is recognized as being late since it is beyond 3 business days late and it represents 33% of the monthly billings. This would represent the first occasion of a monthly late payment.

Disputed billed amounts for the sake of this section are disputed via the process outlined in 2.4.1(B)(3)(c), (d) and (e).

In the event that a customer has a history of late payments or has not demonstrated established credit, the Telephone Company may require the customer to pay a two-month deposit based on the total charges billed and rendered by the Telephone Company for the most recent two months of service. In the event the customer has not received two months of service from the Telephone Company, the two-month deposit will be based on charges estimated by the Telephone Company for the initial two-month period. (N)

2. General Regulations (Cont'd) (N)

2.4 Payment Arrangements and Credit Allowances (Cont'd)

2.4.1 Payment of Rates, Charges and Deposits (Cont'd)

(A) (Cont'd)

The Telephone Company will provide the customer written notice by Overnight Delivery as described in 2.1.8(A) if a deposit is required under this section. The customer must pay the two-month deposit within 15 business days following the date the written notice is sent to the customer. Such notice period will begin the day after the notice is sent. If the customer fails to pay the deposit by the due date, as described above, the Telephone Company may send the customer a written notice by Overnight Delivery stating that if the deposit is not received within 15 calendar days of the original deposit due date, the Telephone Company may take any or all of the actions specified in Section 2.1.8(A).

Simple interest at a rate set forth in 2.4.1(A)(1) following will accrue on cash deposits. Simple interest will be applied for the number of days from the date the customer deposit is received by the Telephone Company to and including the date such deposit is credited to the customer's account or the date the deposit is refunded by the Telephone Company.

The cash deposit will be returned, with any accrued, uncredited interest within 15 business days of when a customer with a history of late payments or no established credit history demonstrates a one-year prompt payment record (undisputed billed balances are paid within the bill payment requirements outlined in 2.4.1(B)(3)(a)). (N)

2. General Regulations (Cont'd) (N)

2.4 Payment Arrangements and Credit Allowances (Cont'd)

2.4.1 Payment of Rates, Charges and Deposits (Cont'd)

(A) (Cont'd)

In the event the provision of all service to the customer is terminated and the Telephone Company maintains a cash deposit from the customer, the deposit and any accrued, uncredited interest will be applied to any outstanding sums owed to the Telephone Company, and any remaining balance will be returned to the customer.

(1)

State	Interest Rate	(N)
Nevada	The customer will receive interest for each month or portion thereof that a deposit is held at the rate computed per Nevada Revised Statute (NRS) Chapter 704.655, which is at the rate fixed for 6-month Treasury bills of the United States at the first auction: (i) On or before December 1 of any year for the period from January 1 to June 30 of the succeeding year, or (ii) On or after June 1 of any year for the period from July 1 to December 31 of that year.	(T) (M) (M)

Material appearing on this page previously appeared on 4th Revised Page 2-36.

(This page filed under Transmittal No. 97)

(x)

x Issued under authority of Special Permission No. 03-002 of the F.C.C. in order to withdraw material filed under Transmittal No. 20 without becoming effective. (x)

(This page filed under Transmittal No. 28)

(x)

(x)

x Issued under authority of Special Permission No. 03-002 of the F.C.C. in order to withdraw material filed under Transmittal No. 20 without becoming effective.

(This page filed under Transmittal No. 28)

2. General Regulations (Cont'd)

2.4 Payment Arrangements and Credit Allowances (Cont'd)

2.4.1 Payment of Rates, Charges and Deposits (Cont'd)

(D)

(D)

Material previously appearing on this page now appears on 4th Revised Page 2-35.3.

2. General Regulations (Cont'd)

2.4 Payment Arrangements and Credit Allowances (Cont'd)

2.4.1 Payment of Rates, Charges and Deposits (Cont'd)

(B) The Telephone Company shall bill on a current basis all charges incurred by and credits due to the customer under this tariff attributable to services including, but not limited to, Maintenance of Service as set forth in 13.3.1 following, established or discontinued during the preceding billing period. In addition, the Telephone Company shall bill in advance charges for all services to be provided during the ensuing billing period except for charges associated with service usage and for the Federal Government which will be billed in arrears. The bill day (i.e., the billing date of a bill for Access Service under this tariff, the period of service each bill covers and the payment date will be as follows:

(1) For End User Access Service and Presubscription, the Telephone Company will establish a bill day each month for each end user account. The bill will cover End User Access Service charges for the ensuing billing period except for End User Access Service for the Federal Government which will be billed in arrears. Any applicable presubscription charges, any known unbilled charges for prior periods and any known unbilled adjustments for prior periods for End User Access Service and presubscription service will be applied to this bill. Such bills are due when rendered.

(2) For Service other than End User Access Service, and Presubscription, the Telephone Company will establish a bill day each month for each customer account. The bill will cover non-usage sensitive service charges for the ensuing billing period for which the bill is rendered, any known unbilled non-usage-sensitive charges for prior periods and unbilled usage charges for the period after the last

2. General Regulations (Cont'd)

2.4 Payment Arrangements and Credit Allowances (Cont'd)

2.4.1 Payment of Rates, Charges and Deposits (Cont'd)

(B) (Cont'd)

(2) (Cont'd)

bill day through the current bill day. Any known unbilled usage charges for prior periods and any known unbilled adjustments will be applied to this bill. Payment for such bills is due as set forth in (3) following. If payment is not received by the payment date, as set forth in (3) following, a late payment penalty will apply as set forth in (3) following.

(3) (a) All bills dated as set forth in (2) preceding for service, other than End User Access Service and Presubscription, provided to the customer by the Telephone Company are due 31 days (payment date) after the bill day or by the next bill date (i.e., same date in the following month as the bill date), whichever is the shortest interval, except as provided herein. If such payment date would cause payment to be due on a Saturday, Sunday or Holiday (i.e., New Year's Day, Independence Day, and a day when Washington's Birthday, Memorial Day is legally observed), payment for such bills will be due from the customer as follows:

If such payment date falls on a Sunday or on a Holiday which is observed on a Monday, the payment date shall be the first non-Holiday day following such Sunday or Holiday. If such payment date falls on a Saturday or on a Holiday which is observed on Tuesday, Wednesday, Thursday or Friday, the payment date shall be the last non-Holiday day preceding such Saturday or Holiday.

2. General Regulations (Cont'd)

2.4 Payment Arrangements and Credit Allowances (Cont'd)

2.4.1 Payment of Rates, Charges and Deposits (Cont'd)

(B) (Cont'd)

(3) (Cont'd)

(b) Further, if any portion of the payment is received by the Telephone Company after the payment date as set forth in (a) preceding, then a late payment penalty shall be due to the Telephone Company. The late payment charge shall be calculated at 1.5% per month or portion thereof for the period from the due date until the payment is received.

(c) In the event that a billing dispute occurs concerning any charges billed to the customer by the Telephone Company the following regulations will apply. (N)

(1) A good faith dispute requires the customer to provide a written claim to the Telephone Company. Instructions for submitting a dispute can be obtained by calling the billing inquiry number shown on the customer's bill. Such claim must identify in detail the basis for the dispute, the account number under which the bill has been rendered, the date of the bill and the specific items on the bill being disputed, to permit the Telephone Company to investigate the merits of the dispute.

(2) The date of the dispute shall be the date on which the customer furnishes the Telephone Company the account information required by Section 2.4.1(B)(3)(c)(1) above.

(3) The date of resolution shall be the date on which the Telephone Company completes its investigation of the dispute, notifies the customer in writing of the disposition and, if the billing dispute is resolved in favor of the customer, applies the credit for the amount of the dispute resolved in the customer's favor to the customer's bill.

(4) If the dispute is decided to be in favor of the Telephone company, then the resolution date will be the date upon which a written decision on this dispute is sent to the customer. (N)

Material previously appearing on this page now appears on 1st Revised Page 2-40.

2. General Regulations (Cont'd)

2.4 Payment Arrangements and Credit Allowances (Cont'd)

2.4.1 Payment of Rates, Charges and Deposits (Cont'd)

(B) (Cont'd)

(3) (Cont'd)

(c) (Cont'd)

In the event that a billing dispute concerning any charges billed to the customer by the Telephone Company is resolved in favor of the customer, any late payment charges collected on the disputed amount will be credited to the customer for each month or portion thereof that they were collected. In addition, if the customer disputes the billed amount and pays the total amount (i.e., the nondisputed amount and the disputed amount) and the billing dispute is resolved in the favor of the customer, the customer will receive a credit for the disputed amount penalty from the Telephone Company. The disputed amount penalty shall be the disputed amount resolved in the customer's favor plus penalty interest as set forth in 2.4.1(B)(3)(b) preceding. (M)

When a customer pays the total amount on or before the due date, and a dispute is filed within 90 days of the due date, the penalty interest period shall begin on the payment date. When a dispute is filed more than 90 days after the due date, the penalty interest period shall begin from the date of the dispute or the date of overpayment, whichever is later. The penalty interest period shall end on the date the Telephone Company pays the overpayment and associated disputed amount penalty to the customer's account. (M)

The disputed amount penalty factor credited to the customer shall be calculated at 1.5% for each month or portion thereof for which the overbilling existed.

(d) In the event that a billing dispute concerning any charges billed to the Customer by the Telephone Company is resolved in favor of the Telephone Company, any payments withheld pending settlement of the dispute shall be subject to the late payment penalty set forth in (b) preceding. (D)
(D)
(D)
(D)

Material appearing on this page previously appeared on Original Page 2-39.
Material previously appearing on this page now appears on 1st Revised Page 2-41.

(This page filed under Transmittal No. 97)

2. General Regulations (Cont'd)

2.4 Payment Arrangements and Credit Allowances (Cont'd)

2.4.1 Payment of Rates, Charges and Deposits (Cont'd)

(B) (Cont'd)

(3) (Cont'd)

(d) (Cont'd) (M)

If the customer disputes the bill on or before the payment date, and pays the undisputed amount on or before the payment due date, the late payment charge for the disputed amount will start after the payment due date. The late payment charge will continue to accrue until payment is received by the Telephone Company.

If the customer disputes the bill after the payment due date, and pays the undisputed amount after the payment due date, the late payment charge for the disputed amount shall begin on the payment due date. (M)
(D)

(D)

Material appearing on this page previously appeared on Original Page 2-40.

(This page filed under Transmittal No. 97)

2. General Regulations (Cont'd)

2.4 Payment Arrangements and Credit Allowances (Cont'd)

2.4.1 Payment of Rates, Charges and Deposits (Cont'd)

(C) Adjustments for the quantities of services established or discontinued in any billing period beyond the minimum period set forth for services in other sections of this tariff will be prorated to the number of days or major fraction of days based on a s 30-day month. The Telephone Company will, upon request and if available, furnish such detailed information as may reasonably be required for verification of any bill.

(D) When a rate as set forth in this tariff is shown to more than two decimal places, the charges will be determined using the rate shown. The resulting amount will then be rounded to the nearest penny (i.e., rounded to two decimal places).

(E) When more than one copy of a customer bill for services provided under the provisions of this tariff is furnished to the customer, an additional charge applies for each additional copy of the bill as set forth in 13.4 following.

2.4.2 Minimum Periods

The minimum periods for which services are provided and for which rates and charges are applicable is one month except for those services set forth in 5.2.5(C), 7.2.4, 9.4(A) and 13.3.5(C)(1)(b),(c) and (d) following.

The minimum period for which service is provided and for which rates and charges are applicable for a Specialized Service or Arrangement provided on an individual case basis as set forth in 12. following, is one month unless a different minimum period is established with the individual case filing.

When a service is discontinued prior to the expiration of the minimum period, charges are applicable, whether the service is used or not, as follows.

2. General Regulations

2.4 Payment Arrangements and Credit Allowances (Cont'd)

2.4.2 Minimum Periods, (Cont'd)

(A) When a service with a one month minimum period is discontinued prior to the expiration of the minimum period, a one month charge will apply at the rate level in effect at the time service is discontinued.

(B) When a service with a minimum period greater than one month is discontinued prior to the expiration of the minimum period, the applicable charge will be the lesser of (1) the Telephone Company's total nonrecoverable costs less the net salvage value for the discontinued service or (2) the total monthly charges, at the rate level in effect at the time service is discontinued, for the remainder of the minimum period.

2.4.3 Cancellation of an Order for Service

Provisions for the cancellation of an Access Order or Planned Facilities order for Switched Access or Special Access service are set forth in 5.2.2(B), 5.2.3 and 5.4.5 following.

2. General Regulations

2.4 Payment Arrangements and Credit Allowances (Cont'd)

2.4.4 Credit Allowance for Service Interruptions

(A) General

A service is interrupted when it becomes unusable to the customer because of a failure of a facility component used to furnish service under this tariff, or in the event that the protective controls applied by the Telephone Company result in the complete loss of service by the customer as set forth in 6.5.1 following. An interruption period starts when an inoperative service is reported to the Telephone Company, and ends when the service is operative.

(B) When a Credit Allowance Applies

In case of an interruption to any service, allowance for the period of interruption, if not due to the negligence of the customer, shall be as follows:

(1) For Special Access Services other than Program Audio and Video Services and for CCS/SS7 interconnection and Switched Transport Service, no credit shall be allowed for an interruption of less than 30 minutes. The customer shall be credited for an interruption of 30 minutes or more at the rate of 1/1440 of the monthly charges for the service for each period of 30 minutesor major fraction thereof that the interruption continues. The monthly charges used to determine the credit shall be as follows.

(a) For two-point Special Access service, the monthly charge shall be the total of all the monthly rate element charges associated with the service(i.e., two (C) channel terminations, channel mileage and optional features and functions).

2. General Regulations

2.4 Payment Arrangements and Credit Allowances (Cont'd)

2.4.4 Credit Allowance for Service Interruptions (Cont'd)

(B) When a Credit Allowance Applies (Cont'd)

(1) (Cont'd)

(b) For multipoint Special Access Services, the monthly charge shall be only the total of all the monthly rate element charges associated with that portion of the service that is inoperative (i.e., a channel termination per customer premises,channel mileage and optional features and functions.)

(c) For multiplexed services (including Switched Transport Services), the monthly charge shall be the total of all the monthly rate element charges associated with that portion of the service that is inoperative. When the facility which is multiplexed or the multiplexer itself is inoperative, the monthly charge shall be the total of all the monthly rate element charges associated with the service (i.e., the channel termination, channel mileage or Direct Trunked Transport and optional features and functions, including the multiplexer on the facility to the Hub and the channel terminations, channel mileages or Direct Trunk Transport and optional features and functions on the individual from the Hub). When the service which rides a channel of the multiplexed facility is inoperative, the monthly charge shall be the total of all the monthly rate element charges associated with that portion of the service from the Hub to a customer premises or end office (i.e., channel termination, channel mileage Direct Trunk Transport and optional features and functions).

(d) For Switched Transport Services, the monthly charge shall be the total of all the monthly rate element charges associated with the Service(i.e., Entrance Facility and Direct Trunked Transport).

2. General Regulations

2.4 Payment Arrangements and Credit Allowances (Cont'd)

2.4.4 Credit Allowance for Service Interruptions (Cont'd)

(B) When a Credit Allowance Applies (Cont'd)

(2) For Program Audio and Video Special Access Service, no credit shall be allowed for an interruption of less than 30 seconds. The customer shall be credited for an interruption of 30 seconds or more as follows:

(a) For two-point services, when monthly rates are applicable, the credit shall be at the rate of 1/8640 of the monthly charges for the service for each period of 5 minutes or major fraction thereof that the interruption continues.

(b) For two-point services, when daily rates are applicable, the credit shall be at the rate of 1/288 of the daily charges for the service for each period of 5 minutes or major fraction thereof that the interruption continues.

(c) For multipoint services, when monthly rates are applicable, the credit shall be at the rate of 1/8640 of the monthly charges for all channel terminations, channel mileages and optional features and functions that are inoperative for each period of 5 minutes or major fraction thereof that the interruption continues.

(d) For multipoint services, when daily rates are applicable, the credit shall be at the daily rate of 1/288 of the daily charges for all channel terminations, channel mileages and optional features and functions that are inoperative for each period of 5 minutes or major fraction thereof that the interruption continues.

2. General Regulations

2.4 Payment Arrangements and Credit Allowances (Cont'd)

2.4.4 Credit Allowance for Service Interruptions (Cont'd)

(B) When a Credit Allowance Applies (Cont'd)

(2) (Cont'd)

(e) For multipoint services, the credit for the monthly or daily charges includes the charges for the distribution amplifier only when the distribution amplifier is inoperative.

(f) When two or more interruptions occur during a period of 5 consecutive minutes. Such multiple interruptions shall be considered as one interruption.

(3) For Switched Access Service, no credit shall be allowed for an interruption of less than 24 hours. The customer shall be credited for an interruption of 24 hours or more at the rate of 1/30 of (a) any applicable monthly rates and (b) the assumed minutes of use charge for each period of 24 hours or major fraction thereof that the interruption continues. However, in no case is a credit allowance applicable when the actual usage charge exceeds the minimum monthly charge in any one monthly billing period.

2. General Regulations

2.4 Payment Arrangements and Credit Allowances (Cont'd)

2.4.4 Credit Allowance for Service Interruptions (Cont'd)

(B) When a Credit Allowance Applies (Cont'd)

(4) The credit allowance(s) for an interruption or for a series of interruptions shall not exceed the greatest of (a) any monthly rates or (b) the assumed minutes of use charge for the service in any one month billing.

(5) For certain Special Access services (Wideband Digital, WD1-4; Digital Data Access, DA1-4; and High Capacity, HC1), any period during which the error performance is below that specified for the service will be considered as an interruption.

(6) Service interruptions for Specialized Service or Arrangements provided under the provisions of 10. or 12. following shall be administered in the same manner as those set forth in this section (2.4.4) unless other regulations are specified with the individual case filing.

(C) When a Credit Allowance Does Not Apply

No credit allowance will be made for:

(1) Interruptions caused by the negligence of the customer.

(2) Interruptions of a service due to the failure of equipment or systems provided by the customer, or others.

2. General Regulations

2.4 Payment Arrangements and Credit Allowances (Cont'd)

2.4.4 Credit Allowance for Service Interruptions (Cont'd)

(C) When a Credit Allowance Does Not Apply (Cont'd)

(3) Interruptions of a service during any period in which the Telephone Company is not afforded access to the premises where the service is terminated.

(4) Interruptions of a service when the customer has released that service to the Telephone Company for maintenance purposes, to make rearrangements, or for the implementation of an order for a change in the service, during the time that was negotiated with the customer prior to the release of that service. Thereafter, a credit allowance as set forth in (B) preceding applies.

(5) Interruptions of a service which continue because of the failure of the customer to authorize replacement of any element of special construction, as set forth in Pacific Bell Telephone Company's TARIFF F.C.C. NO. (T)
2 for Special Construction. The period for which no (T)
credit allowance is made begins on the seventh day after the customer receives the Telephone Company's written notification of the need for such replacement and ends on the day after receipt by the Telephone Company of the customer's written authorization for such replacement.

(6) Periods when the customer elects not to release the service for testing and/or repair and continues to use it on an impaired basis.

(7) Periods of temporary discontinuance as set forth in 2.2.2(B) preceding.

(8) Periods of interruption as set forth in 13. following.

(9) An interruption or a group of interruptions, resulting from a common cause, for amounts less than one dollar.

(This page filed under Transmittal No. 4)

2. General Regulations

2.4 Payment Arrangements and Credit Allowances (Cont'd)

2.4.4 Credit Allowance for Service Interruptions (Cont'd)

(C) When a Credit Allowance Does Not Apply (Cont'd)

(10) For audio connecting facilities and television connecting facilities no credit shall be allowed for an interruption of less than 30 seconds. The customer shall be credited for an interruption of 30 seconds or more at the rate of 1/8640 of the monthly charge for the facility for each 5 minutes or fraction thereof that an interruption continues.

Interruptions occurring during a period of 5 consecutive minutes shall be considered as one interruption. An interruption of either the audio or video portion of a television connecting facility shall be considered as an interruption of the facility if the customer releases the entire facility for investigating and clearing the troubles thereon.

(D) Use of an Alternative Service Provided by the Telephone Company

Should the customer elect to use an alternative service provided by the Telephone Company during the period that a service is interrupted, the customer must pay the tariffed rates and charges for the alternative service used.

(E) Temporary Surrender of a Service

In certain instances, the customer may be requested by the Telephone Company to surrender a service for purposes other than maintenance, testing or activity relating to a service order. If the customer consents, a credit allowance will be granted. The credit allowance will be 1/1440 of the monthly rate for each period of 30 minutes or fraction thereof that the service is surrendered. In no case will the credit allowance exceed the monthly rate for the service surrendered in any one monthly billing period.

2.4.5

2. General Regulations

2.4 Payment Arrangements and Credit Allowances (Cont'd)

2.4.6 Reestablishment of Service Following Fire, Flood or Other Occurrence

(A) Nonrecurring Charges Do Not Apply

Charges do not apply for the reestablishment of service following a fire, flood or other occurrence attributed to an Act of God provided that:

(1) The service is of the same type as was provided prior to the fire, flood or other occurrence.

(2) The service is for the same customer.

(3) The service is at the same location on the same premises.

(4) The reestablishment of service begins within 60 days after Telephone Company service is available. (The 60 day period may be extended a reasonable period if the renovation of the original location on the premises affected is not practical within the allotted time period).

(B) Nonrecurring Charges Apply

Nonrecurring Charges apply for establishing service at a different location on the same premises or at a different premises pending reestablishment of service at the original location.

2.4.7 Title or Ownership Rights

(A) The payment of rates and charges by customers for the services offered under the provisions of this tariff does not assign, confer or transfer title or ownership rights to proposals or facilities developed or utilized, respectively, by the Telephone Company in the provision of such services.

(This page filed under Transmittal No. 1)

2. General Regulations

2.4 Payment Arrangements and Credit Allowances (Cont'd)

2.4.8 Access Services Provided By More Than One Telephone Company

(A) When an Access Service is provided by more than one Telephone Company, the Telephone Companies involved will agree upon a billing, design and ordering arrangement which is consistent with the provisions contained in this section and the Ordering and Billing Forum Standards, Multiple Exchange Carrier Access Billing (MECAB) and Multiple Exchange Carrier Ordering and Design (MECOD). The Telephone Companies involved will mutually agree upon one of the following billing methods as set forth in (1) and (2) following based upon the interconnection arrangements between the Telephone Companies and the availability of measurement capability.

The Telephone Company will notify the customer which of the billing methods will be used. In addition, the Telephone Company will send written notification to the customer of a change in billing methods 30 days prior to such change. The customer will place the order for the services as set forth in 5.2.9 following dependent upon the billing method.

ALA or Feature Group A (FGA) Switched Access Services will be billed as set forth in 2.4.8(A)(1) following.

ATA950, ATANEA and ATAXXX or Feature Group B, Feature Group C and Feature Group D (FGB, FGC and FGD) Switched Access, Special Access and Directory Assistance Services will be billed as set forth in 2.4.8(A)(2)(a) or 2.4.8(A)(2)(b) following.

2. General Regulations

2.4 Payment Arrangements and Credit Allowances (Cont'd)

2.4.8 Access Services Provided By More Than One Telephone Company (Cont'd)

(A) (Cont'd)

(1) Non Meet Point Billing

(a) Single Company Billing/Single Bill Option for ALA or Feature Group A (FGA) Service

The Telephone Company receiving the order from the customer, as specified in 5.2.9(A)(1), following will arrange to provide the service, determine the applicable charges and bill the customer for the entire service in accordance with its Access Services tariff.

ACCESS SERVICE

2. General Regulations

2.4 Payment Arrangements and Credit Allowances (Cont'd)

2.4.8 Access Services Provided By More Than One Telephone Company (Cont'd)

(A) (Cont'd)

(1) Non Meet Point Billing (Cont'd)

(This page filed under Transmittal No. 1)

2. General Regulations

2.4 Payment Arrangements and Credit Allowances (Cont'd)

2.4.8 Access Services Provided By More Than One Telephone Company (Cont'd)

(A)(Cont'd)

(1) Non Meet Point Billing (Cont'd)

2. General Regulations

2.4 Payment Arrangements and Credit Allowances (Cont'd)

2.4.8 Access Services Provided By More Than One Telephone Company (Cont'd)

(A)(Cont'd)

(2) Meet Point Billing

Meet Point Billing is required when an access service is provided by multiple Telephone Companies for ATA950, ATANEA, ATAXXX or for Feature Groups B, C and D Switched Access Services, Directory Assistance and Special Access.

For usage rated access services the access minutes of use will be determined by the Initial Billing Company and used by the Initial Billing Company and any Subsequent Billing Company(s) for the development of access charges.

- The Initial Billing Company for ATA950, ATANEA, ATAXXX or Feature Groups B, C and D Switched Access Services is normally the end user's end office, for WATS usage the Initial Billing Company is normally the WATS serving office, for Directory Assistance the Initial Billing company is normally the Directory Assistance location. When the Initial Billing Company is other than the normally designated Telephone Company office, the Telephone Company will notify the customer.

- The Subsequent Billing Company(s) is any Telephone Company(s) in whose territory a segment of Local Transport is provided and/or

2. General Regulations

2.4 Payment Arrangements and Credit Allowances (Cont'd)

2.4.8 Access Services Provided By More Than One Telephone Company (Cont'd)

(A)(Cont'd)

(2) Meet Point Billing (Cont'd)

where the customer's Point of Termination is located.

There are two Meet Point Billing Options - - Single Bill and Multiple Bill. The Single Bill option is the preferred method.

The Telephone Company must notify the customer of: (1) the Meet Point Billing Option that will be used, (2) the Telephone Company(s) that will render the bill(s) (3) the Telephone Company(s) to whom payment(s) should be remitted, and (4) the Telephone Company(s) that will provide the bill inquiry function. The Telephone Company shall provide such notification at the time that orders are placed for access service. Additionally, the Telephone Company shall provide this notice in writing 30 days in advance of any changes.

The Telephone Company that renders the bill - - the Bill Rendering Telephone Company - - will include on the access service bill, based upon Industry Standards, cross reference(s) to the other Telephone Company(s) service and the common circuit identifiers. Should a billing dispute arise, the terms and conditions of the Bill Rendering Telephone Company will apply.

2. General Regulations

2.4 Payment Arrangements and Credit Allowances (Cont'd)

2.4.8 Access Services Provided By More Than One Telephone Company (Cont'd)

(A)(Cont'd)

(2) Meet Point Billing (Cont'd)

(a) Single Bill Option

The Single Bill option provides three billing alternatives, (i) Single Bill/Multiple Tariff, (ii) Single Bill/Pass-Through Billing and (iii) Single Bill/Single Tariff which are described following:

(i) Single Bill/Multiple Tariff

Each Telephone Company will receive an order or a copy of the order from the customer as specified in 5.2.9(A)(2) and arrange to provide the service. Each Telephone Company will:

- determine all recurring and nonrecurring rates and charges of its access tariff; and

- communicate the application, rates and charges to the Bill Rendering Company.

2. General Regulations

2.4 Payment Arrangements and Credit Allowances (Cont'd)

2.4.8 Access Services Provided By More Than One Telephone Company (Cont'd)

(A)(Cont'd)

(2) Meet Point Billing (Cont'd)

(a) Single Bill Option (Cont'd)

(i) Single Bill/Multiple Tariff (Cont'd)

The Bill Rendering Telephone Company will:

- determine and include all recurring and nonrecurring charges for each involved Telephone Company;

- identify each involved Telephone Company's charges separately on the bill;

- forward the bill to the customer; and

- advise the customer how to remit the payment, either directly to each Telephone Company involved in the provision of this meet point billed service; or, as a single payment made to the Bill Rendering Telephone Company. If payments are to be sent directly to the Bill Rendering Telephone Company, the non-bill rendering Telephone Company(s) will provide the customer with written authorization for the payment arrangement.

2. General Regulations

2.4 Payment Arrangements and Credit Allowances (Cont'd)

2.4.8 Access Services Provided By More Than One Telephone Company (Cont'd)

(A)(Cont'd)

(2) Meet Point Billing (Cont'd)

(a) Single Bill Option (Cont'd)

(ii) Single Bill/Pass-Through Billing

Each Telephone Company will receive an order or a copy of the order from the customer as specified in 5.2.9(A)(2) and arrange to provide the service. Each Telephone Company will:

- prepare its own bill;
- determine and include all recurring and nonrecurring rates and charges of its access tariff; and
- forward the bill to the Bill Rendering Telephone Company for the meet point billed access services.

The Bill Rendering Telephone Company will:

- apply usage data, when needed, to the bill and calculate the charges;

2. General Regulations

2.4 Payment Arrangements and Credit Allowances (Cont'd)

2.4.8 Access Services Provided By More Than One Telephone Company (Cont'd)

(A)(Cont'd)

(2) Meet Point Billing (Cont'd)

(a) Single Bill Option (Cont'd)

(ii) Single Bill/Pass-Through Billing (Cont'd)

The Bill Rendering Telephone Company will:

- identify each involved Telephone Company's charges separately on the bill;

- combine all the bills of the involved Telephone Companies of a meet point billed access service into one access bill;

- forward the bill to the customer; and

- advise the customer how to remit the payment, either directly to each Telephone Company involved in the provision of this meet point billed service; or, as a single payment made to the Bill Rendering Telephone Company. If payments are to be sent directly to the Bill Rendering Telephone Company, the non-bill rendering Telephone Company(s) will provide the customer with written authorization for the payment arrangement.

2. General Regulations

2.4 Payment Arrangements and Credit Allowances (Cont'd)

2.4.8 Access Services Provided By More Than One Telephone Company (Cont'd)

(A) (Cont'd)

(2) Meet Point Billing (Cont'd)

(a) Single Bill Option (Cont'd)

(iii) Single Bill/Single Tariff

Each Telephone Company will receive an order or a copy of the order from the customer as specified in 5.2.9(A)(2) and arrange to provide the service. The Bill Rendering Telephone Company will:

- determine and include all recurring and nonrecurring charges of its access tariff; and

- forward the bill to the customer.

The customer will remit the payment to the Bill Rendering Telephone Company.

2. General Regulations

2.4 Payment Arrangements and Credit Allowances (Cont'd)

2.4.8 Access Services Provided By More Than One Telephone Company (Cont'd)

(A) (Cont'd)

(2) Meet Point Billing (Cont'd)

(b) Multiple Bill Option

Each Telephone Company will receive an order or copy of the order from the customer, as specified in 5.2.9 (A)(2). Each Telephone Company will be the Bill Rendering Telephone Company and will:

- prepare its own bill;
- determine and include all recurring and nonrecurring rates and charges of its access tariff;

2. General Regulations

2.4 Payment Arrangements and Credit Allowances (Cont'd)

2.4.8 Access Services Provided By More Than One Telephone Company (Cont'd)

(A) (Cont'd)

(2) Meet Point Billing (Cont'd)

(b) Multiple Bill Option (Cont'd)

- bill in accordance with its access tariff; and

- forward the bill to the customer.

The customer will remit the payment directly to each Telephone Company that bills it.

(c) Determination of Meet Point Billed Local Transport, Directory Transport and Channel Mileage Charges

(i) Determine the appropriate Local Transport or Channel Mileage by computing the number of airline miles between the Telephone Company premises (end office, access tandem or serving wire centers for Switched Access or serving wire centers for Special Access) using the V&H method set forth in 6.7.11, and 7.2.5 following.

2. General Regulations

2.4 Payment Arrangements and Credit Allowances (Cont'd)

(A) (Cont'd)

(2) Meet Point Billing (Cont'd)

(c) Determination of Meet Point Billed Local Transport, Directory Transport and Channel Mileage Charges (Cont'd)

(ii) Determine the billing percentage (BP), as set forth in NATIONAL EXCHANGE CARRIER ASSOCIATION, INC. TARIFF F.C.C. No. 4, which represents the portion of the service provided by each Telephone Company.

(iii) For ATA950, ATANEA, ATAXXX or for Feature Groups B, C and D Switched Access Services using BP Method, (1) multiply the number of access minutes of use times the number of airline miles, as set forth in (i) preceding, times the BP for each Telephone Company, as set forth in (ii) preceding times the Local Transport Facility rate; (2) multiply the Local Transport Termination rate times the number of access minutes.

The Local Transport Termination rate is applied as set forth in 6.1.2(A) following.

ACCESS SERVICE

2. General Regulations

2.4 Payment Arrangements and Credit Allowances (Cont'd)

2.4.8 Access Services Provided By More Than One Telephone Company (Cont'd)

(A) (Cont'd)

(2) Meet Point Billing (Cont'd)

(c) Determination of Meet Point Billed Local Transport, Directory Transport and Channel Mileage Charges (Cont'd)

(iv) For Special Access using BP method, multiply the number of airline miles, as set forth in (i) preceding, times the BP for each Telephone Company, as set forth in (ii) preceding, times the Channel Mileage Facility rate. Add the Channel Mileage Termination rate.

(v) For Directory Assistance Service, multiply the Directory Transport rate times the number of directory assistance calls times the BP for each Telephone Company, as set forth in (ii) preceding.

(vi) When three or more Telephone Companies are involved in providing an Access Service, the intermediate Telephone Company(s) will determine the appropriate charges as set forth in (iii) and (iv) preceding, except the Local Transport Termination or Channel Mileage Termination rate does not apply.

ACCESS SERVICE

2. General Regulations

2.4 Payment Arrangements and Credit Allowances (Cont'd)

2.4.8 Access Services Provided By More Than One Telephone Company (Cont'd)

(B) Example - Switched Access

(1) Layout

(a) ATANEA or Feature Group C Switched Access is ordered to End Office A.

(b) End Office A is in operating territory of Telephone Company A.

(c) Customer designated premises is in operating territory of Telephone Company B.

Telephone Company A (TC A) Operating Territory	Telephone Company B (TC B) Operating Territory

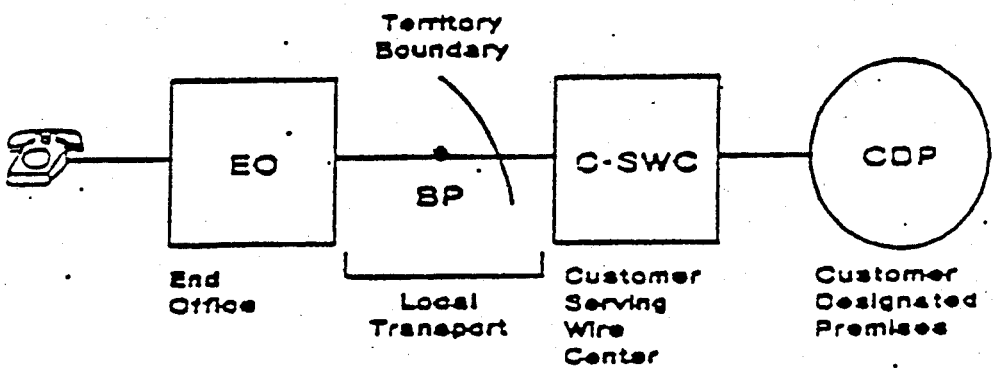

(This page filed under Transmittal No. 1)

2. General Regulations (Cont'd)

2.4 Payment Arrangements and Credit Allowances (Cont'd)

2.4.8 Access Services Provided By More Than One Telephone Company (Cont'd)

(B) Example - Switched Access (Cont'd)

The following examples reflect the rate calculations for end office company (TC A). Rates for end office company (TC B) would appear in the appropriate access tariff.

(2) Assume:

Airline miles (ALM) TC A premises to TC B premises = 22.1, rounded = 23.

Billing Percentage (BP)
TC A = 20%
TC B = 80%

Access Minutes (AM) = 9000

Local Transport Rates:
TC A: Local Transport Facility Rate = LT FAC
Local Transport Termination Rate =LT TERM

2. General Regulations (Cont'd)

2.4 Payment Arrangements and Credit Allowances (Cont'd)

2.4.8 Access Services Provided By More Than One Telephone Company (Cont'd)

(B) Example - Switched Access (Cont'd)

(3) BP Method

Formula:

Access Minutes (AM) x Airline Miles (ALM) x Billing Percentage (BP) x Local Transport Facility Rate (LT FAC) + [Local Transport Termination Rate (LT TERM) x Access Minute (AM)] = Total

Calculation

TC A

AM		ALM		BP		LT FAC		LT TERM		AM		
9000	x	23	x	.20	x	LT FAC	+	[LT TERM	x	9000]	=	TOTAL

2. General Regulations

2.5 Connections

2.5.1 General

Equipment and Systems (i.e., terminal equipment, multiline terminating systems and communications systems) may be connected with access service (Switched and Special) furnished by the Telephone Company where such connection is made in accordance with the provisions specified in Technical Reference Publication AS No. 1 and in 2.1 preceding.

2.5.2 Standard Access Service Connections

Access Services are provided by means of wire, fiber optics, radio or any other suitable technology or a combination thereof. Special Access Service connections are made directly or through a Telephone Company Hub where bridging or multiplexing functions are performed. These connections can either be analog or digital.

2.5.3 Expanded Interconnection Service

Expanded Interconnection Service provides a customer with space and associated requirements such as power and environmental conditioning within a Telephone Company serving wire center to locate certain fiber optic or microwave facilities and equipment, and a connection to certain Telephone Company provided services.

Expanded Interconnection Service will be provided subject to the regulations and rates and charges set forth in Section 18 following.

ACCESS SERVICE

2. General Regulations (Cont'd)

2.6 Definitions

Certain terms used herein are defined as follows:

Access Code

The term "Access Code" denotes a uniform seven digit code assigned by the Telephone Company to an individual Customer. The seven digit code has the form 950-0XXX, 950-1XXX or 101XXXX.

Access Customer Name Abbreviation (ACNA) (N)

Denotes a three alpha character code that identifies the customer to which the Access Service bill is rendered.

Access Customer Terminal Location (ACTL)

Denotes the eleven (11) character Common Language Location Identifier (CCLI) code identifying the customer’s Point of Presence (POP/InterLATA facility terminal location). (N)

Access Minutes

The term "Access Minutes" denotes that usage of exchange facilities in interstate or foreign service for the purpose of calculating chargeable usage. On the originating end of an interstate or foreign call, usage is measured from the time the originating end user's call is delivered by the Telephone Company to and acknowledged as received by the customer's facilities connected with the originating exchange. On the terminating end of an interstate or foreign call, usage is measured from the time the call is received by the end user in the terminating exchange. Timing of usage at both originating and terminating ends of an interstate or foreign call shall terminate when the calling or called party disconnects, whichever event is recognized first in the originating and terminating exchanges, as applicable.

Access Tandem

The term "Access Tandem" denotes a Telephone Company switching system that provides a concentration and distribution function for originating or terminating traffic between end offices and customer terminal premises.

Access Tandem Network

The term "Access Tandem Network" denotes the network of trunk groups for originating and/or terminating Switched Access traffic between a single access tandem and the Telephone Company subtending end offices.

2. General Regulations (Cont'd)

2.6 Definitions (Cont'd)

Affiliate

The term "Affiliate", with respect to Interconnector, means (a) any corporation of other entity owning, either directly or indirectly, amajority of the outstanding stock of Interconnector (Parent), or (b) any corporation or other entity in which a majority of the ownership interest is held, either directly or indirectly, by Parent or Interconnector.

Agent

The term "Agent" denotes that person or persons who have legal authority to give the Telephone Company permission to place public and semi-public pay telephones on their premises, who have the authority to subscribe to the service, and who control access to or usage of the public or semi-public pay telephones.

Aggregator

Denotes any individual, partnership, association, joint-stock company, trust, governmental entity or corporation as defined under Part 64.708(b) of the F.C.C. Rules and Regulations.

Answer/Disconnect Supervision

The term "Answer/Disconnect Supervision" denotes the transmission of the switch trunk equipment supervisory signal (off-hook or on-hook) to the customer point of termination as an indication that the called party has answered or disconnected.

2. General Regulations (Cont'd)

2.6 Definitions (Cont'd)

Attenuation Distortion
The term "Attenuation Distortion" denotes the difference in loss at specified frequencies relative to the loss at 1004 Hz, unless otherwise specified.

Balance (100 Type) Test Line
The term "Balance (100 Type) Test Line" denotes an arrangement in an end office which provides for balance and noise testing.

Bit
The term "Bit" denotes the smallest unit of information in the binary system of notation.

Business Day
The term "Business Day" denotes the times of day that a company is open for business. This is 8:00 A.M. to 5:00 P.M., Monday through Friday. (C) (D)

(D)

Busy Hour Minutes of Capacity (BHMC)
The term "Busy Hour Minutes of Capacity (BHMC)" denotes the customer specified maximum amount of Switched Access Service and/or Directory Assistance Service access minutes the customer expects to be handled in an end office switch during any hour in an 8:00 A.M. to 11:00 P.M. period for the Feature Group and/or Directory Assistance Service ordered. This customer furnished BHMC quantity is the input data the Telephone Company uses to determine the number of transmission paths for the Feature Group and/or Directory Assistance Service ordered.

2. General Regulations (Cont'd)

2.6 Definitions (Cont'd)

Call

The term "Call" denotes a customer attempt for which the complete address code (e.g., 0-, 911, or 10 digits) is provided to the serving dial tone office.

Call-out (N)

A customer required dispatch outside of normal business hours when a (N)
technician is not available for dispatch. (N)

Carrier Identification Code

The term "Carrier Identification Code" denotes a three-digit code, unique to the interexchange carrier, which is used nationally by the Telephone Company to identify traffic and to facilitate its routing to the carrier based upon presubscription or dialed digits.

C Band

1525-1565 nanometers (unit of spatial measurement that is one billionth of a meter).

CCS

The term "CCS" denotes a hundred call seconds, which is a standard unit of traffic load that is equal to 100 seconds of usage or capacity of a group of servers (e.g., trunks).

2. General Regulations (Cont'd)

2.6 Definitions (Cont'd)

Central Office

The term "Central Office" denotes a local Telephone Company switching system where Telephone Exchange Service customer station loops are terminated for purposes of interconnection to each other and to trunks.

Central Office Prefix

The term "Central Office Prefix" denotes the first three digits (NXX) of the seven digit telephone number assigned to an End User's Telephone Exchange Service when dialed on a local basis.

Centralized Automatic Reporting on Trunks Testing

The term "Centralized Automatic Reporting on Trunks Testing" denotes a type of testing which includes the capacity for measuring operational and transmission parameters.

Channel(s)

The term "Channel(s)" denotes an electrical or photonic, in the case of fiber optic-based transmission systems, communications path between two or more points of termination.

Channel Service Unit

The term "Channel Service Unit" denotes equipment which performs one or more of the following functions: termination of a digital facility, regeneration of digital signals, detection and/or correction of signal format error, and remote loop back.

Clear Channel Capability

The term "Clear Channel Capability" denotes an arrangement that allows the customer to transport 1.544 Mbps of information through a DS1 with no constraint on the quantity or sequence of one (Mark) and zero (space) bits utilitizing the Bipolar with Eight Zero Substitution (B8ZS) Method of providing bit sequence independence.

2. General Regulations (Cont'd)

2.6 Definitions (Cont'd)

Channelize

The term "Channelize" denotes the process of multiplexing-demultiplexing wider bandwidth or higher speed channels into narrower band-width or lower speed channels.

C-Message Noise

The term "C-Message Noise" denotes the frequency weighted average noise within an idle voice channel. The frequency weighting, called C-message, is used to simulate the frequency characteristic of the 500-type telephone set and the hearing of the average subscriber.

C-Notched Noise

The term "C-Notched Noise" denotes the C-message frequency weighted noise on a voice channel with a holding tone, which is removed at the measuring end through a notch (very narrow band) filter.

2. General Regulations (Cont'd)

2.6 Definitions (Cont'd)

Coin Station

The term "Coin Station" denotes a location where Telephone Company equipment is provided in a public or semipublic place where Telephone Company customers can originate telephonic communications and pay the applicable charges by inserting coins into the equipment.

Commingling[1]

Commingling means the connecting, attaching or otherwise linking of an unbundled network element, or a combination of unbundled network elements, to one or more facilities or services that a requesting telecommunications carrier has obtained at wholesale from the Telephone Company, or the combining of an unbundled network element, or a combination of unbundled network elements with one or more such facilities or services. Commingle means the act of commingling.

Common Channel Signaling

The term "Common Channel Signaling" denotes a switched communications network that allows call control messages from the voice and data network to be transferred on communications paths (out of band) separate from the voice and data communications.

Common Line

The term "Common Line" denotes a line, trunk, pay telephone line or other facility provided under the general and/or local exchange service tariffs of the Telephone Company, terminated on a central office switch. A common line-residence is a line or trunk provided under the residence regulations of the general and/or local exchange service tariffs. A common line-business is a line or trunk provided under the business regulations of the general and/or local exchange service tariffs.

Communications System

The term "Communications System" denotes channels and other facilities which are capable of communications between terminal equipment provided by other than the Telephone Company.

Company Code Dialed Message

Message recorded on AMA tape for billing purposes that occurs when End User, served out of an equal access end office, dials 1-0 and a 3 digit IEC Code to access the IEC of his choice for long distance.

[1] In the event the Commission or a court, pursuant to any regulatory or judicial review of the Commission's *Review of the Section 251 Unbundling Obligations of Incumbent Local Exchange Carriers*, Report and Order and Order on Remand and Further Notice of Proposed Rulemaking, CC Docket No. 01-338, FCC 03-36, para. 581 (released Aug. 21, 2003) (*Triennial Review Order*), vacates, stays, remands, reconsiders, or rejects the portion of the Triennial Review Order requiring ILECs to permit commingling, the terms and conditions of this tariff authorizing commingling, which are identified with a footnote, shall cease to be effective as of the effective date of the Commission order or the issuance of the court's mandate. In that event, the Telephone Company will provide customers that have commingled UNE(s) and/or UNE Combination(s) with wholesale services obtained under this Tariff written notice that, within 30 days, customers must either convert such UNE(s) or UNE Combination(s) to a comparable service, or disconnect such UNE(s) and/or UNE Combination(s) from those wholesale services. Failure to provide the Telephone Company instructions to convert or disconnect such UNE(s) and/or UNE Combination(s) within 30 days, as described above, shall be deemed authorization to convert the UNE(s) and/or UNE Combination(s) to comparable access services at month-to-month rates. (T)

2. General Regulations (Cont'd)

2.6 Definitions (Cont'd)

Conventional Signaling

Conventional Signaling has been traditionally used in North America for the purpose of transmitting the called number's address digits from the originating end office. In this system, all of the dialed digits are received by the originating switching machine, a path is selected, and the sequence of supervisory signals and outpulsed digits is initiated. No overlap outpulsing ten digit ANI, ANI information digits, or acknowledgement wink are included in this signaling sequence.

Customers

The term "Customer(s)" denotes any individual, partnership, association, joint-stock company, trust corporation, or governmental entity or any other entity which subscribes to the Services offered under this tariff, including both Interexchange Carrier (IC's) and End User.

Customer Access Billing System (CABS)

The term “Customer Access Billing System (CABS)” denotes a mechanized billing system which bills large and small interexchange customers for access to our local exchange network. These customers are billed from the access tariffs filed with the FCC and local PUCS.

Customer Record Information Systems (CRIS)

The term “Customer Record Information Systems (CRIS)” denotes a computer system which maintains a database of up-to-date customer information. The system can interface with other application systems requiring this type of information.

Data Base - 800 Access Service

Data Base 800 Access Service consists of regional data bases that contain call-processing information specified by 800 Access Service customers. The data base contains the customer record information necessary to perform carrier identification and 800 number translation.

Data Transmission (107 Type) Test Line

The term "Data Transmission (107 Type) Test Line" denotes an arrangement which provides for a connection to a signal source which provides test signals for one-way testing of data and voice transmission parameters.

2. General Regulations (Cont'd)

2.6 Definitions (Cont'd)

Decibel

The term "Decibel" denotes a unit used to express relative difference in power, usually between acoustic or electric signals, equal to ten (10) times the common logarithm of the ratio of two signal powers.

Decibel Reference Noise C-Message Weighting

The term "Decibel Reference Noise C-Message Weighting" denotes noise power measurements with C-Message Weighting in decibels relative to a reference 1000 Hz tone of 90 dB below 1 milliwatt.

Decibel Reference Noise C-Message Referenced to 0 (Zero)

The term "Decibel Reference Noise C-Message Referenced to "0" denotes noise power in "Decibel Reference Noise C-Message Weighting" referred to or measured at a zero transmission level point.

Detail Billing

The term "Detail Billing" denotes the listing of each message and/or rate element for which charges to a customer are due on a bill prepared by the Telephone Company.

Directory Assistance (Interstate)

The term "Directory Assistance" denotes the provision of telephone numbers by a Telephone Company operator when the operator location is accessed by a customer premises by sending the appropriate signals, i.e., off-hook, 411, 555-1212 or (NPA) 555-1212.

Directory Assistance Location (Interstate)

The term "Directory Assistance Location" denotes a Telephone Company office where Telephone Company equipment first receives the Directory Assistance call from a customer and selects the first operator position to respond to the Directory Assistance call.

2. General Regulations (Cont'd)

2.6 Definitions (Cont'd)

Direct Trunked Transport

The term "Direct Trunked Transport" denotes a Switched Transport facility between a customer's premises serving wire center and an end office that provides a customer with dedicated switched access transport without routing through an access tandem.

Dual Tone Multifrequency Address Signaling

The term "Dual Tone Multifrequency Address Signaling" denotes a type of signaling that is an optional feature of Switched Access Feature Group A (FGA) or Access Line Arrangement (ALA). It may be utilized when FGA or ALA is being used in the terminating direction (from the point of interface with the customer to the local exchange end office). An office arranged for Dual Tone Multifrequency Signaling would expect to receive address signals from the customer in the form of Dual Tone Multifrequency signals.

Echo Control

The term "Echo Control" denotes the control of reflected signals in a telephone transmission path.

Echo Path Loss

The term "Echo Path Loss" denotes the measure of reflected signal at a 4-wire point of interface without regard to the send and receive Transmission Level Point.

Echo Return Loss

The term "Echo Return Loss" denotes a frequency weighted measure of return loss over the middle of the voiceband (approximately 500 to 2500 Hz), where talker echo is most annoying.

Effective 2-Wire

The term "Effective 2-Wire" denotes a condition which permits the simultaneous transmission in both directions over a channel, but it is not possible to insure independent information transmission in both directions. Effective 2-wire channels may be terminated with 2-wire or 4-wire interfaces.

2. General Regulations (Cont'd)

2.6 Definitions (Cont'd)

Effective 4-Wire

The term "Effective 4-Wire" denotes a condition which permits the simultaneous independent transmission of information in both directions over a channel. The method of implementing effective 4-wire transmission is at the discretion of the Telephone Company (physical, time domain, frequency-domain separation or echo cancellation techniques). Effective 4-wire channels may be terminated with a 2-wire interface at the customer premises. However, when terminated 2-wire, simultaneous independent transmission cannot be supported because the two wire interface combines the transmission paths into a single path.

End Office Switch

The term "End Office Switch" denotes a local Telephone Company switching system where Telephone Exchange Service customer station loops are terminated for purposes of interconnection to trunks. This includes Remote Line Locations served by a host central office in a different wire center.

End User

The term "End User" means any customer of an interstate or foreign telecommunications service that is not a carrier, except that a carrier, other than a Telephone Company shall be deemed to be an "end user" when such carrier uses a telecommunications service for administrative purposes, and a person or entity that offers telecommunications services exclusively as a reseller shall be deemed to be an "end user" if all resale transmissions offered by such reseller originate on the premises of such reseller.

Entrance Facility

The term "Entrance Facility" denotes the transmission path between the customer's designated premises and the Service Wire Center where the customer would normally obtain local dial tone.

Entry Switch

See First Point of Switching

Envelope Delay Distortion

The term "Envelope Delay Distortion" denotes a measure of the linearity of the phase versus frequency of a channel.

2. General Regulations (Cont'd)

2.6 Definitions (Cont'd)

Equal Level Echo Path Loss

The term "Equal Level Echo Path Loss" (ELEPL) denotes the measure of Echo Path Loss (EPL) at a 4-wire interface which is corrected by the difference between the send and receive Transmission Level Point (TLP). [ELEPL = EPL - TLP (send) + TLP (receive)]

Expected Measured Loss

The term "Expected Measured Loss" denotes a calculated loss which specifies the end-to-end 1004 Hz loss on a terminated test connection between two readily accessible manual or remote test points. It is the sum of the inserted connection loss and test access loss including any test pads.

Exchange

The term "Exchange" denotes a unit generally smaller than a Local Access and Transport Area established by the Telephone Company for the administration of communications service in a specified area which usually embraces a city, town or village and its environs. It consists of one or more central offices together with the associated facilities used in furnishing communications service within that area. One or more designated exchanges comprise a given Local Access and Transport Area.

Exchange Access Signaling

The signaling system is used by equal access end offices to transmit originating information and address digits to the customer's premises and which includes the means of verifying the receipt of these address digits. Features of this system include overlap outpulsing, identification of the ten-digit telephone number of the calling party, and acknowledgement wink supervisory signals.

2. General Regulations (Cont'd)

2.6 Definitions (Cont'd)

Expanded Interconnection Service

The term "Expanded Interconnection Service" denotes provisioning necessary to accommodate a fiber optic or microwave connection within the Telephone Company serving wire center between Telephone Company provided switched or High Capacity Special Access Services and Interconnector-provided facilities and equipment.

Extended Area Service

(See definition of Exchange)

Facility Percent Interstate Usage (PIU)

The Percent Interstate Usage (PIU) is used to apportion non-recurring and recurring monthly rates and charges associated with Switched Access Facilities Entrance Facilities (EF), Expanded Interconnection Service Channel Termination (EISCT), Direct Trunked Transport (DTT) or Tandem Switched Transport (TST) and the EISCT between jurisdictions.

Field Identifier

The term "Field Identifier" denotes two to four characters that are used on service orders to convey specific instructions. Field Identifiers may or may not have associated data. Selected Field Identifiers are used in Telephone Company billing systems to generate nonrecurring charges.

First Come - First Served

The term "First Come, First Served" denotes a procedure followed when the first order received will be the first order processed.

2. General Regulations (Cont'd)

2.6 Definitions (Cont'd)

First Point of Switching

The term "First Point of Switching" denotes the first Telephone Company location at which switching occurs on the terminating path of a call proceeding from the customer premise to the terminating end office and, at the same time, the last Telephone Company location at which switching occurs on the originating path of a call proceeding from the originating end office to the customer premise.

Frequency Shift

The term "Frequency Shift" denotes the change in the frequency of a tone as it is transmitted over a channel.

Grandfathered

The term "Grandfathered" denotes Terminal Equipment, Multiline Terminating Systems and Protective Circuitry directly connected to the facilities utilized to provide services under the provisions of this tariff, and which are considered grandfathered under Part 68 of the F.C.C.'s Rules and Regulations.

Host Central Office

The term "Host Central Office" denotes an electronic switching unit containing the central call processing functions which serve the Host Central Office and its Remote Line Locations.

Hub

The term "Hub" denotes a Telephone Company designated serving wire center at which bridging or multiplexing functions are performed.

IC

See Interexchange Carrier

ICB

See Individual Case Basis

2. General Regulations (Cont'd)

2.6 Definitions (Cont'd)

Impedance Balance

The term "Impedance Balance" denotes the method of expressing Echo Return Loss and Singing Return Loss at a 4-wire interface whereby the gains and/or loss of the 4 wire portion of the transmission path, including the hybrid, are not included in the specification.

Impulse Noise

The term "Impulse Noise" denotes any momentary occurrence of the noise on a channel over a specified level threshold. It is evaluated by counting the number of occurrences which exceed the threshold.

Individual Case Basis

The term "Individual Case Basis" denotes a condition in which the rates and charges for an offering under the provisions of this tariff are developed based on the circumstances in each case. Terms and conditions of each offering may include a Termination Charge.

In-Line Filter

An In-Line Filter is a low pass filter that allows flow through of the voice band frequencies up to 4 kilohertz.

Inserted Connection Loss

The term "Inserted Connection Loss" denotes the 1004 Hz power difference (in dB) between the maximum power available at the originating end and the actual power reaching the terminating end through the inserted connection.

2. General Regulations (Cont'd)

2.6 Definitions (Cont'd)

Interconnection Chamber

The term "Interconnection Chamber" denotes a location in the Telephone Company serving wire center served by an Interconnector's fiber optic cable or microwave facilities as specified in Section 18 following.

Interconnection Charge

The term "Interconnection Charge" denotes the charge applies to all access customers that interconnect with the Telephone Company's switched access service.

Interconnector

The term "Interconnector" denotes any individual, partnership, association, joint-stock company, trust corporation or other entity who provides fiber optic and associated facilities or microwave facilities for connection of its equipment, collocated in Telephone Company serving wire center(s), to certain Nevada Bell Switched or Special Access Services.

Interexchange Carrier (IC) or Interexchange Common Carrier

The terms "Interexchange Carrier" (IC) or "Interexchange Common Carrier" denotes any individual, partnership, association, joint-stock company, trust, governmental entity or corporation engaged for hire in interstate or foreign communication by wire or radio, between two or more exchanges.

Intermodulation Distortion

The term "Intermodulation Distortion" denotes a measure of the nonlinearity of a channel. It is measured using four tones, and evaluating the ratios (in dB) of the transmitted composite four-tone signal power to the second-order products of the tones (R2), and the third-order products of the tones (R3).

Internet Protocol (IP) Dedicated Access Connection (N)

Denotes a dedicated high speed connection such as; High Speed (384 Kbps or higher download speed) Cable Modem, DSL Line, Dedicated T1 to the internet, Dedicated DS3 to the internet or other dedicated IP private line.

Internet Protocol (IP) Enabled Voice Information Service IP-VIS Dedicated Location

Denotes a unique space owned or controlled by an IP-VIS provider, its agent or designee where the IP-VIS provider has located its media gateway used for IP-VIS or where the IP-VIS provider has located transmission facilities used for IP-VIS. (N)

(This page filed under Transmittal No. 81)

2. General Regulations (Cont'd)

2.6 Definitions (Cont'd)

Internet Protocol (IP) Enabled Voice Information Service (IP-VIS) (N)

Denotes Internet Protocol (IP) voice information services and applications provided over an IP network and their associated capabilities and functionalities that enable an IP-VIS user to send or receive a communication based on Internet Protocol. IP-VIS Service is service between a provider of Internet Protocol (IP) enabled voice information services and the IP-VIS user only.

IP Enabled Voice Information Service (IP-VIS) Off Net Traffic

Denotes IP-VIS Traffic originating from IP-VIS Users terminating traffic to non-Telephone Company End User subtending Telephone Company Access Tandems via the TIPToP one way port interface.

IP Enabled Voice Information Service (IP-VIS) On Net Traffic

Denotes IP-VIS Traffic originating from IP-VIS Users and terminating to Telephone Company users via the TIPToP one way port interface.

IP Enabled Voice Information Service (IP-VIS) Traffic

Denotes any traffic that originates from or terminates to an IP-VIS User at an IP-VIS User Site. Also the traffic must travel on an Internet Protocol Network, and provide an accurate and dialable CPN as part of the call record, that when dialed, will reach that specific IP-VIS User, on their Internet Protocol Network at their IP-VIS User Site.

IP Enabled Voice Information Service (IP-VIS) User

Denotes a person utilizing a phone set dedicated for all IP use for all voice traffic on the Internet Protocol Network at the IP-VIS User Site, and has an accurate and dialable CPN that when dialed, will reach the IP-VIS User on their Internet Protocol Network at their IP-VIS User Site.

IP Enabled Voice Information Service (IP-VIS) User Site

Denotes the specific temporary or permanent premises where a specific communication is initiated or received by the IP Enabled Voice Information Service (IP-VIS) User, using Internet Protocol.

Internet Protocol (IP) Gateway

Denotes a device that converts communications from Time Division Multiplexing (TDM) to Internet Protocol (IP).

Internet Protocol (IP) Network

Denotes a network that carries traffic in Internet Protocol on an IP Dedicated Access Connection between the IP-VIS User Site and the IP Gateway and does not change the protocol to any other protocol between the IP-VIS User Site and the IP Gateway. (N)

(This page filed under Transmittal No. 81)

2. General Regulations (Cont'd)

2.6 Definitions (Cont'd)

Interstate Communications

The term "Interstate Communications" denotes both interstate and foreign communications.

Intrastate Communications

The term "Intrastate Communications" denotes any communications within Nevada subject to oversight by the Public Service Commission of Nevada as provided by the laws of the State of Nevada.

L Band (N)

1565-1605 nanometers (unit of spatial measurement that is one (N)
billionth of a meter). (N)

Line-Side Connection

The term "Line-Side Connection" denotes a connection of a transmission path to the line side of a local exchange switching system.

Local Access and Transport Area

The term "Local Access and Transport Area" denotes a geographic area established for the provision and administration of communications service. It encompasses one or more designated exchanges which are grouped to serve common social, economic and other purposes.

Local Calling Area

The term "Local Calling Area" denotes a geographical area, as defined in the Telephone Company's Local and/or General Exchange Service tariff, in which an end user (Telephone Exchange Service subscriber) may complete a call without incurring MTS charges.

Local Tandem Switch

The term "Local Tandem Switch" denotes a local Telephone Company switching unit by which local or access telephonic communications are switched to and from an End Office Switch.

2. General Regulations (Cont'd)

2.6 Definitions (Cont'd)

Loop Around Test Line

The term "Loop Around Test Line" denotes an arrangement utilizing a Telephone Company Central office which to provide a means for making two-way transmission tests on a manual basis. This arrangement has two terminations, each reached by means of separate telephone numbers and does not require any specific customer premises equipment. Equipment subject to this test arrangement is at the discretion of the customer.

Loss Deviation

The term "Loss Deviation" denotes the variation of the actual loss from the designed value.

Maritime Radio Common Carriers (MRCCs)

The term "Maritime Radio Common Carriers (MRCCs)" denotes carriers which are regulated under Part 81 of the Federal Communications Commission's Rules and Regulations.

Major Fraction Thereof

The term "Major Fraction Thereof" is any period of time in excess of 1/2 of the stated amount of time. As an example, in considering a period of 24 hours, a major fraction thereof would be any period of time in excess of 12 hours exactly. Therefore, if a given service is interrupted for a period of thirty-six hours and fifteen minutes, the customer would be given a credit allowance for two twenty-four hour periods for a total of forty-eight hours.

Message

The term "Message" denotes a "call" as defined preceding.

Milliwatt (102 Type) Test Line

The term "Milliwatt (102 Type) Test Line" denotes an arrangement in an end office which provides a 1004 Hz tone at 0 dBm0 for one-way transmission measurements towards the customer premises from the Telephone Company end office.

ACCESS SERVICE

2. General Regulations (Cont'd)

2.6 Definitions (Cont'd)

Modification of Final Judgement (MFJ)

The term "Modification of Final Judgement" (MFJ) denotes the consent decree approved by the U.S. District Court in United States versus Western Electric 552 F. Supp. 171 (To D.C. 1982).

Network Control Signaling

The term "Network Control Signaling" denotes the transmission of signals used in the telecommunications system which perform functions such as supervision (control, status, and charge signals), address signaling (e.g., dialing), calling and called number identifications, rate of flow, service selection error control and audible tone signals (call progress signals indicating re-order or busy conditions, alerting, coin denominations, coin collect and coin return tones) to control the operation of the telecommunications system.

Network Management Controls

The term "Network Management Controls" denotes the type of controls that the Telephone Company may need to implement when a substantial number of 900 calls are expected during a short period of time. The Telephone Company will work cooperatively with the customer to implement these controls.

900 Call Blocking

The term "900 Call Blocking" denotes the Telephone Company's central office call blocking service that allows the Telephone Company's residential and business subscribers to block access to all directly-dialed, the Telephone Company's operator assisted, and the Telephone Company's operator entered billing to Nevada 900 programs within Nevada and to all Interexchange Carrier 900 calls originating within the Telephone Company's service area.

Non IP Enabled Voice Information Service (IP-VIS) Traffic (N)

Denotes any traffic not specifically defined as or not identifiable as IP-VIS traffic or any traffic that does not travel on an IP Dedicated Access Connection or any traffic that is not in Internet Protocol, for any portion of the communication between the IP-VIS User and the IP Gateway device, or any traffic from a Non IP-VIS User, or any traffic from a user site that is not an IP-VIS Site, or any traffic classified by this tariff as Non IP-VIS traffic.

Non IP Enabled Voice Information Service (IP-VIS) User

Any user(s) not meeting the definition of an IP-VIS User.

Non IP Enabled Voice Information Service (IP-VIS) Off Net Traffic

Denotes Non IP-VIS Traffic between a user (IP-VIS or non IP-VIS user) or customer (TIPToP or non TIPToP customer) and non-Telephone Company (Off Net) End Users via a TIPToP interface. (N)

Certain material previously appearing on this page now appears on 1st Revised Page 2-90.

(This page filed under Transmittal No. 81)

2. General Regulations (Cont'd)

2.6 Definitions (Cont'd)

Non IP Enabled Voice Information Service (IP-VIS) On Net Traffic (N)

Denotes Non IP-VIS Traffic between a user (IP-VIS or non IP-VIS user) or customer (IP or non IP customer) and Telephone Company users via a TIPToP port interface. (N)

Non-Primary Residential EUCL (M)

The term "Non-Primary Residential EUCL" denotes each additional local exchange line provided to a specific end user at the same premises as the primary residential line. (M)

Nonsynchronous Test Line

The term "Nonsynchronous Test Line" denotes an arrangement in step-by-step end offices which provides operational tests which are not as complete as those provided by the synchronous test lines, but can be made more rapidly.

North American Numbering Plan

The term "North American Numbering Plan" denotes a ten-digit code consisting of two parts: a three-digit area (Numbering Plan Area) code and a seven-digit telephone number which in turn is made up of a three-digit Central Office code plus a four-digit station number.

Off-hook

The term "Off-hook" denotes the active condition of Switched Access or a Telephone Exchange Service line.

Off Net End User (N)

Denotes a non-Telephone Company end user that subtends a Telephone Company Access Tandem. (N)

On-hook

The term "On-hook" denotes the idle condition of Switched Access or a Telephone Exchange Service line.

Open Circuit Test Line
The term "Open Circuit Test Line" denotes an arrangement in an end office which provides an ac open circuit termination of a trunk or line by means of an inductor of several Henries.

Originating Direction

The term "Originating Direction" denotes the use of Access Service for the origination of calls from an end user premises to a customer premises.

Certain material appearing on this page previously appeared on Original Page 2-89.

(This page filed under Transmittal No. 81)

2. General Regulations (Cont'd)

2.6 Definitions (Cont'd)

Overlap Outpulsing

The feature of the exchange access signaling system which permits initiation of pulsing to the customer's premises before the calling subscriber has completed dialing an originating call.

OZZ

The term "OZZ" specifies the trunk group at the tandem switch over which a call is routed.

Pay Telephone

The term "Pay Telephone" denotes access line service available to payphone service providers for use by the general public for public convenience and necessity.

In some instances, pay telephones may be screened to provide restrictions in service (e.g., Charge-a-Call, Inmate Services).

Peaked Services

The term "Peaked Services" denotes a service that will produce a substantial call volume during a short period of time (e.g., media stimulated events) that may cause excessive network congestion.

Phase Jitter

The term "Phase Jitter" denotes the unwanted phase variations of a signal.

Point of Termination

The term "Point of Termination" denotes the point of demarcation, within a customer designated premises at which The Telephone Company's responsibility for the provision of Access Service ends, and the customers responsibility begins. This term is not to be limited to one building but applies as well to a complex or campus-type configuration of buildings.

2. General Regulations (Cont'd)

2.6 Definitions (Cont'd)

Premises

The term "Premises" denotes a building or a portion of a building in a multi-tenant building, or buildings on continuous property (except Railroad Right-of-Way, etc.) not separated by a public highway.

Presubscribed Interexchange Carrier Charge (PICC)

The term "Presubscribed Interexchange Carrier Charge" (PICC) denotes a charge billed on monthly basis to the interexchange carrier to whom the end user's Multiline Business access line is presubscribed. In the event the end user does not have a presubscribed interexchange carrier, the Multiline Business PICC will be billed directly to the end user.

Primary Exchange Carrier

The term "Primary Exchange Carrier" denotes the Local Exchange Telephone Company in whose exchange a customer's first point of switching is located.

Primary Residential EUCL

The term "Primary Residential EUCL" denotes the initial local exchange line provided to a specific customer at a specific customer premises.

Prime Service Vendor

The term "Prime Service Vendor" denotes the status of the Telephone Company when contracting directly with the user of the Telecommunications Service Priority (TSP) service.

Query

The term "Query" denotes a message delivered from a Service Switching Point (SSP) which causes a signaling message to be issued to request processing instructions or service data contained in a centralized database.

Radio Common Carriers (RCCs)

The term "Radio Common Carriers" (RCCs) denotes carriers which are regulated under Part 22 of the Federal Communications Commission's Rules and Regulations.

2. General Regulations (Cont'd)

2.6 Definitions (Cont'd)

Remote Switching Modules and/or Remote Switching Systems

The term "Remote Switching Modules and/or Remote Switching Systems" denotes small, remotely controlled electronic end office switches which obtain their call processing capability from an ESS-type Host Office. The Remote Switching Modules and/or Remote Switching Systems cannot accommodate direct trunks to a customer.

Return Loss

The term "Return Loss" denotes a measure of the similarity between the two impedance’s at the junction of two transmission paths. The higher the return loss, the higher the similarity.

Registered Equipment

The term "Registered Equipment" denotes the customer's premises equipment which complies with and has been approved within the Registration Provisions of Part 68 of the F.C.C.'s Rules and Regulations.

Secondary Channel

The term "secondary channel" denotes a second totally independent, lower speed channel operating in parallel with the primary channel of a Digital Data Access Service circuit.

Secondary Exchange Carrier

The term "Secondary Exchange Carrier" denotes the Local Exchange Telephone Company in whose exchange a customer's end office is located and where that end office is not the customer's first point of switching.

2. General Regulations (Cont'd)

2.6 Definitions (Cont'd)

Service Control Point

The term "Service Control Point" denotes the node in the SS7 network where several independent data base applications receive and respond to SS7 queries.

Service Management System

The term "Service Management System" (SMS) denotes the primary Toll Free Access Service system that interfaces between the regional SCPs and Toll Free Access Service providers order entry centers and/or systems. The primary function of the SMS is to administer Toll Free records in the SCPs that involve service provisioning, maintenance network administration and management.

Service Switching Point

The term "Service Switching Point" (SSP) denotes a switch which recognizes Toll Free calls and suspends them in order to query the Toll Free database using SS7 for routing instructions for the Toll Free call.

Serving Wire Center

The term "Serving Wire Center" denotes the wire center that normally serves the customer's premises and is designated as such for the purpose of measuring mileage.

Seven Digit Manual Test Line

The term "Seven Digit Manual Test Line" denotes an arrangement which allows the customer to select balance, milliwatt and synchronous test lines by manually dialing a seven digit number over the associated access connection.

Short Circuit Test Line

The term "Short Circuit Test Line" denotes an arrangement in an end office which provides for an ac short circuit termination of a trunk or line by means of a capacitor of at least four microfarads.

2. General Regulations (Cont'd)

2.6 Definitions (Cont'd)

Signal-to-C-Notched Noise Ratio

The term "Signal-to-C-Notched Noise Ratio" denotes the ratio in dB of a test signal to the corresponding C-Notched Noise.

Singing Return Loss

The term "Singing Return Loss" denotes the frequency weighted measure of return loss at the edges of the voiceband (200 to 500 Hz and 2500 to 3200 Hz), where singing (instability) problems are most likely to occur.

Special Order

The term "Special Order" denotes an order for a Directory Assistance Service.

Signaling Point of Interface

The term "Signaling Point of Interface" denotes the interface point between the Telephone Company and its access customer for purposes of exchanging SS7 signaling messages for Common Channel Signaling.

Signaling System Seven

The term "Signaling System Seven" denotes an international standard packet protocol, accepted by the International Telegraph and Telephone Consultative Committee (CCITT) and the American National Standards Institute (ANSI) for use with Common Channel Signaling.

Signaling Transfer Point

The term "Signaling Transfer Point" denotes a specialized packet switch which provides CCS network access and performs CCS message routing and screening.

Storage Area Network (SAN) (N)

Network which links host computers, storage servers, and systems. (N)

2. General Regulations (Cont'd)

2.6 Definitions (Cont'd)

Subcontractor
The term "subcontractor" denotes the status of the Telephone Company when contracting directly with a Prime Service Vendor to provide Telecommunications Service Priority (TSP) to a service user.

Subtending End Office of an Access Tandem
The term "Subtending End Office of an Access Tandem" denotes an end office that has final trunk group routing through that tandem.

Switching Point Code
The term "Switching Point Code" denotes a nine character numeric code that identifies a switch that is supported by SS7 signaling.

Switching System
The term "Switching System" denotes the hardware and/or software utilized by the Telephone Company for the establishment and maintenance of a given central office.

Synchronous Test Line
The term "Synchronous Test Line" denotes an arrangement in an end office which performs marginal operational tests of supervisory and ring-tripping functions.

Tandem Switched Transport
The term "Tandem Switched Transport" denotes a common transmission path from end offices to the Access Tandem and Tandem Switching.

Termination Charge
The term "Termination Charge" denotes a charge that is applicable should a customer discontinue Special Construction, Specialized Service or Arrangement or service developed on an Individual Case Basis, prior to the expiration of its termination liability period. This charge is computed at the time of discontinuance and in no case will it exceed the maximum termination liability (charge) which was agreed to by the customer at the time the Special Construction, Specialized Service or Arrangement or service developed on an Individual Case Basis, was undertaken.

2. General Regulations (Cont'd)

2.6 Definitions (Cont'd)

Terminating Direction
The term "Terminating Direction" denotes the use of Access Service for the completion of calls from a customer premises to an end user premises.

Toll Free Access Service
The term Toll Free Access Service denotes an originating service which provides a Toll Free Access Service customer identification function and optional features based on the dialed number at Telephone Company SSPs and SCPs. Toll Free Access Service calls are free to the originating end user and are characterized by specifically dedicated orders. Toll Free Access Service currently includes the following codes: 800 and 888.

Transmission Measuring (105 Type) Test Line/Responder
The term "Transmission Measuring (105 Type) Test Line/Responder" denotes an arrangement in an end office which provides far-end access to a responder and permits two-way loss and noise measurements to be made on trunks from a near end office.

Transmission Path
The term "Transmission Path" denotes an electrical path capable of transmitting signals within the range of the service offering, e.g., a voice grade transmission path is capable of transmitting voice frequencies within the approximate range of 300 to 3000 Hz. A transmission path is comprised of physical or derived channels consisting of any form or configuration of facilities typically used in the telecommunications industry.

Trunk
The term "Trunk" denotes a communications path connecting two switching systems in a network, used in the establishment of an end-to-end connection.

Trunk Circuit Identification Code
The term "Trunk Circuit Identification Code" denotes the number assigned to each switched trunk, to identify it to the SS7 signaling system.

Trunk Group
The term "Trunk Group" denotes a set of trunks which are traffic engineered as a unit for the establishment of connections between switching systems in which all of the communications paths are interchangeable.

2. General Regulations (Cont'd)

2.6 Definitions (Cont'd)

Trunk-Side Connection
The term "Trunk-Side Connection" denotes the connection of a transmission path to the trunk side of a local exchange switching system.

Two-Wire to Four-Wire Conversion
The term "Two-Wire to Four-Wire Conversion" denotes an arrangement which converts a four-wire transmission path to a two-wire transmission path to allow a four-wire facility to terminate in a two-wire entity (e.g., a central office switch).

Unbundled Network Elements (UNEs)[1]

Denotes the network elements the Telephone Company is required to provide on an unbundled basis pursuant to Section 251(c)(3) of the Communications Act of 1934, as amended.

Uniform Service Order Code (USOC)
The term "Uniform Service Order Code" denotes a three or five character alphabetic, numeric, or an alphanumeric code that identifies a specific item of service or equipment. Uniform Service Order Codes are used in the Telephone Company billing system to generate recurring rates and nonrecurring charges.

The Uniform Service Order Code listing is as follows:

- If one USOC is listed, this USOC is used in CABS and CRIS,
- If two USOCs are listed, the first USOC is used in CABS and the second is used in CRIS,
- If there are more than two USOCs listed, a footnote has been inserted to describe which USOCs are used by CABS and which are used by CRIS.

[1] In the event the Commission or a court, pursuant to any regulatory or judicial review of the Commission's *Review of the Section 251 Unbundling Obligations of Incumbent Local Exchange Carriers*, Report and Order and Order on Remand and Further Notice of Proposed Rulemaking, CC Docket No. 01-338, FCC 03-36, para. 581 (released Aug. 21, 2003) (*Triennial Review Order*), vacates, stays, remands, reconsiders, or rejects the portion of the Triennial Review Order requiring ILECs to permit commingling, the terms and conditions of this tariff authorizing commingling, which are identified with a footnote, shall cease to be effective as of the effective date of the Commission order or the issuance of the court's mandate. In that event, the Telephone Company will provide customers that have commingled UNE(s) and/or UNE Combination(s) with wholesale services obtained under this Tariff written notice that, within 30 days, customers must either convert such UNE(s) or UNE Combination(s) to a comparable service, or disconnect such UNE(s) and/or UNE Combination(s) from those wholesale services. Failure to provide the Telephone Company instructions to convert or disconnect such UNE(s) and/or UNE Combination(s) within 30 days, as described above, shall be deemed authorization to convert the UNE(s) and/or UNE Combination(s) to comparable access services at month-to-month rates. (T)

2. General Regulations (Cont'd) (M)

2.6 Definitions (Cont'd)

V and H Coordinates Method

The term "V and H Coordinates Method" denotes a method of computing airline miles between two points by utilizing an established formula which is based on the vertical and horizontal coordinates of the two points.

WATS Serving Office

The term "WATS Serving Office" denotes a Telephone Company designated serving wire center where switching, screening and/or recording functions are performed in connection with the closed-end of WATS or WATS-type services.

Wide Area Network Physical Transport (WAN-PHY)
An Ethernet standard for wide area network transport at the physical layer, with a maximum bit rate of 9.953 Gbps.

Wire Center
The term "Wire Center" denotes a building in which one or more central offices, used for the provision of Telephone Exchange Services, are located. (M)

Certain material appearing on this page previously appeared on 3rd Revised Page 2-98.

(This page filed under Transmittal No. 51)

ACCESS SERVICE

(This page filed under Transmittal No. 1)

ACCESS SERVICE

(This page filed under Transmittal No. 1)

3. Carrier Common Line Access Service

This section contains the specific regulations governing the rates and charges which apply to Carrier Common Line Access Service to customers in conjunction with Switched Access Service provided in Section 6 of this tariff. There are two types of rate elements: Carrier Common Line Charges (CCLCs) and Multiline Business Presubscribed Interexchange Carrier Charges (PICCs).

3.1 General Description

The Carrier Common Line Charges provide for the use of end users' Telephone Company-provided common lines by Customers for access to such end users to furnish Interstate communications and recovery of marketing expenses.

Premium Access is (1) Switched Access provided to customers under this tariff which furnish interstate MTS/WATS, and (2) Switched Access Service in an end office converted to equal access.

Non Premium Access is Switched Access Service provided in an end office not yet converted to equal access to customers that do not furnish interstate MTS/WATS.

A Special Access Surcharge, as set forth in 7.3.5 following, will apply to interstate special access service provided by the Telephone Company to a customer, in accordance with regulations as set forth in 7.3 following.

The Multiline Business Presubscribed Interexchange Carrier Charges provide for the use of an End User Common Line (EUCL) by the end user.

3. Carrier Common Line Access Service (Cont'd)

3.2 Limitations

3.2.1 Exclusions

Neither a telephone number nor detail billing are provided with Carrier Common Line Access. Additionally, directory listings and intercept arrangements are not included in the rates and charges for Carrier Common Line Access.

3.2.2 Access Groups

All line side connections provided in the same access group will be limited to the same features and operating characteristics.

All trunk side connections provided in the same access group will be limited to the same features and operating characteristics.

3.2.3 WATS Access Lines

Where Switched Access Services are connected with Special Access Services at Telephone Company Designated WATS Serving Offices for the provision of WATS or WATS-type Services, Switched Access Service minutes which are carried on that end of the service (i.e., originating minutes for outward WATS and WATS-type services and terminating minutes for inward WATS and WATS-type services) shall not be assessed Carrier Common Line Access per minute charges with the following exception. Carrier Common Line Access per minute charges shall apply when an Access Line Arrangement (ALA) or Feature Group A or an Access Trunk Arrangement 950 (ATA950) or Feature Group B switched access is ordered from a non equal access telephone company office that does not have measurement capabilities and the assumed average access minutes, as set forth in 6.7.6 following.

3. Carrier Common Line Access Service (Cont'd)

3.3 Undertaking of the Telephone Company

3.3.1 Provision of Service

Where the customer is provided Switched Access Service under other sections of this tariff, the Telephone Company will provide the use of Telephone Company common lines by a customer for access to end users at rates and charges as set forth in 3.9 following.

3.3.2 Interstate and Intrastate Use

The Switched Access Service provided by the Telephone Company includes the Switched Access Service provided for both interstate and intrastate communications. The Carrier Common Line Access rates and charges as set forth in 3.9 following apply to interstate Switched Access Service access minutes in accordance with the rate regulations as set forth in 3.8.4 following (Percent Interstate Use - PIU).

3.4 Obligations of the Customer

3.4.1 Switched Access Service Requirement

The Switched Access Service associated with Carrier Common Line Access shall be ordered by the customer under other sections of this tariff.

3.4.2 Supervision

The customer facilities at the premises of the ordering customer shall provide the necessary on-hook and off-hook supervision.

3. Carrier Common Line Access Service (Cont'd)

3.5 Determination of Usage Subject to Carrier Common Line Access Charges

Except as set forth herein, all Switched Access Service provided to the customer will be subject to Carrier Common Line Access charges.

3.5.1 Determination of Jurisdiction

When the customer reports interstate and intrastate use of Switched Access Service, the associated Carrier Common Line Access used by the customer for interstate will be determined as set forth in 3.8.4 following (Percent Interstate Use-PIU).

3.5.2 Cases Involving Usage Recording By the Customer

Where an Access Trunk Arrangement Non Equal Access (ATANEA) or Feature Group C end office switching is provided without Telephone Company recording and the customer records minutes of use used to determine Carrier Common Line Access charges (i.e., ATANEA or Feature Group C operator and calls such as pay telephone sent-paid, operator-DDD, operator-person, collect, credit-card, third number and/or other like calls), the customer shall furnish such minutes of use detail to the Telephone Company in a timely manner. If the customer does not furnish the data, the customer shall identify all Switched Access. Services which could carry such calls in order for the Telephone Company to accumulate the minutes of use through the use of special Telephone Company measuring and recording equipment.

3. Carrier Common Line Access Service (Cont'd)

3.5 Determination of Usage Subject to Carrier Common Line Access Charges (Cont'd)

3.5.3 Local Exchange Access and Enhanced Services Exemption

When access to the local exchange is required to provide a customer service (e.g., MTS/WATS-type, telex, Data, etc.) that uses a resold private line service, Switched Access Service Rates and Regulations, as set forth in Section 6. following will apply, except when such access to the local exchange is required for the provision of an enhanced service. Carrier Common Line Access rates and charges as set forth in 3.9 following apply in accordance with the resale rate regulations as set forth in 3.6.4 following.

3.6 Resold Services

3.6.1 Scope

Where the customer is reselling MTS and/or MTS-type service(s) on which the Carrier Common Line and Switched Access charges have been assessed, the customer may, at the option of the customer, obtain ALA or Feature Group A, ATA950, Feature Group B, ATAXXX or Feature Group D Switched Access Service under this tariff as set forth in Section 6. following for originating and/or terminating access in the local exchange. Such access group arrangements whether single lines or trunks or multiline hunt groups or trunk groups will have Carrier Common Line Access charges applied as set forth in 3.9 following in accordance with the resale rate regulations set forth in 3.6.4 following. For purposes of administering this provision:

Resold interstate terminating MTS and MTS-type service(s) shall include collect calls, third number calls and credit card calls where the reseller pays the underlying carrier's service charges; and shall not include intrastate minutes of use.

3. Carrier Common Line Access Service (Cont'd)

3.6 Resold Services (Cont'd)

3.6.1 Scope (Cont'd)

Resold interstate originating MTS and MTS-type service(s) shall not include collect calls, third number, credit card calls or intrastate minutes of use.

3.6.2 Customer Obligations Concerning the Resale of MTS and MTS-type Services

When the customer is reselling MTS and/or MTS-type service as set forth in 3.6.1 preceding, the customer will be charged Carrier Common Line Access charges in accordance with the resale rate regulations as set forth in 3.6.4 following if the customer or the provider of the MTS service furnishes documentation of the MTS usage and/or the customer furnishes documentation of the MTS-type usage. Such documentation supplied by the customer shall be supplied each month and shall identify the involved resold MTS and/or MTS-type services.

The monthly period used to determine the minutes of use for resold MTS and/or MTS-type service(s) shall be the most recent monthly period for which the customer has received a bill for such resold service(s). This information shall be delivered to the Telephone Company, at a location specified by the Telephone Company, no later than 15 days after the bill date shown on the resold MTS and/or MTS-type service bill. If the required information is not received by the Telephone Company, the previously reported information, as described preceding, will be used for the next two months. For any subsequent month, no allocation or credit will be made until the required documentation is delivered to the Telephone Company by the customer.

3. Carrier Common Line Access Service (Cont'd)

3.6 Resold Services (Cont'd)

3.6.3 Resale Documentation Provided By The Customer

When the customer utilizes Switched Access Service as set forth in 3.6.2 preceding, the Telephone Company may request a certified copy of the customer's resold MTS or MTS-type usage billing from either the customer or the provider of the MTS or MTS-type Service. Requests for billing will relate back no more than 12 months prior to the current billing period.

3. Carrier Common Line Access Service (Cont'd)

3.6 Resold Services (Cont'd)

3.6.4 Rate Regulations Concerning the Resale of MTS and MTS-type Services

When the customer is provided an access group to be used in conjunction with the resale of MTS and/or MTS-type services as set forth in 3.6.1 preceding, subject to the limitations as set forth in 3.2 preceding, and Telephone Company receives the usage information required as set forth in 3.6.2 preceding, to calculate the adjustment of Carrier Common Line Access charges, the customer will be billed as set forth in (C), (D), or (E) following, depending upon, respectively, whether the usage is from non equal access offices, equal access offices or a combination of the two.

(A) Apportionment and Adjustment of Resold Minutes of use

When the customer is provided with more than one access group in a LATA in association with the resale of MTS and/or MTS-type services, the resold minutes of use will be apportioned as follows:

(1) Originating Services

The Telephone Company will apportion the resold originating MTS and/or MTS-type services and originating minutes of use for which the resale credit adjustment applies, among the access groups. Such apportionment will be based on the relationship of the originating usage for each access group to the total originating usage for all access groups in the LATA. For purposes of administering this provision:

3. Carrier Common Line Access Service (Cont'd)

3.6 Resold Services (Cont'd)

3.6.4 Rate Regulations Concerning the Resale of MTS and MTS-type Services (Cont'd)

(A) Apportionment and Adjustment of Resold Minutes of Use (Cont'd)

(1) Originating Services (Cont'd)

Resold originating MTS and/or MTS-type services minutes shall be only those attributable to interstate originating MTS and/or MTS-type minutes and shall not include collect, third number, credit card or intrastate minutes of use.

The resale credit adjustment shall apply for resold originating MTS and MTS-type services and minutes of use, provided Carrier Common Line and Switched Access Charges have been assessed on such service.

(2) Terminating Services

The Telephone Company will apportion the resold terminating MTS and/or MTS-type services and terminating minutes of use for which the resale credit adjustment applies, among the access groups. Such apportionment will be based on the relationship of the terminating usage for each access group to the total terminating usage for all access groups in the LATA. For purposes of administering this provision:

3. Carrier Common Line Access Service (Cont'd)

3.6 Resold Services (Cont'd)

3.6.4 Rate Regulations Concerning the Resale of MTS and MTS-type Services (Cont'd)

(A) Apportionment and Adjustment of Resold Minutes of Use (Cont'd)

(2) Terminating Services (Cont'd)

Resold terminating MTS and/or MTS-type services minutes shall be only those attributable to interstate terminating MTS/MTS-type (i.e., collect calls, third number calls, and credit card calls) and shall not include intrastate minutes of use or MTS/MTS-type minutes of use paid for by another party.

The resale credit adjustment shall apply for resold terminating MTS and MTS-type services and minutes of use, provided Carrier Common Line and Switched Access Charges have been assessed on such services.

(B) Direct and Indirect Connections

Each of the access group arrangements used by the customer in association with the resold MTS and/or MTS-type services must be connected either directly or indirectly to the customer designated premises at which the resold MTS and/or MTS-type services are terminated. Direct connections are those arrangements where the access groups and resold MTS and/or MTS-type services are terminated at the same customer designated premises.

3. Carrier Common Line Access Service (Cont'd)

3.6 Resold Services (Cont'd)

3.6.4 Rate Regulations Concerning the Resale of MTS and MTS-type Services (Cont'd)

(B) Direct and Indirect Connections (Cont'd)

Indirect originating connections are those arrangements where the access groups and the resold originating MTS and/or MTS-type services are physically located at different customer designated premises in the same exchange. Such different customer designated premises are connected by facilities that permit a call to flow from access groups to resold MTS and/or MTS-type services.

Indirect terminating connections are those arrangements where the access groups and resold terminating MTS and/or MTS-type services are physically located at different customer designated premises in the same exchange. Such different customer designated premises are connected by facilities that permit a call to flow from resold terminating MTS and/or MTS-type services to access groups.

(C) Access Groups - Non Equal Access Offices Only

The adjustments as set forth here and in (D) and (E) following will be computed separately for each access group.

When all the usage on an access group originates from and/or terminates at end offices that have not been converted to equal access, the Non Premium Access Charge per minute as set forth in 3.9 following will apply. The Access Minutes which will be subject to Carrier Common Line Access charges will be the adjusted originating interstate access minutes plus the adjusted terminating interstate access minutes for such access groups.

3. Carrier Common Line Access Service (Cont'd)

3.6 Resold Services (Cont'd)

3.6.4 Rate Regulations Concerning the Resale of MTS and MTS-type Services (Cont'd)

(C) Access Groups - Non Equal Access Offices Only (Cont'd)

The adjusted originating access minutes will be the originating interstate access minutes less the reported resold originating MTS and/or MTS-type service minutes of use as set forth (A)(1) preceding; but not less than zero. The adjusted terminating access minutes will be the terminating interstate access minutes less the reported resold terminating MTS and/or MTS-type service minutes of use as set forth in (A)(2) preceding; but not less than zero.

(D) Access Groups - Equal Access Offices Only

When all the usage on an access group originates from and/or terminates at end offices that have been converted to equal access, the Premium Access Charge per minute as set forth in 3.9 following will apply. The minutes billed Carrier Common Line Access Services charges will be the adjusted originating interstate access minutes and the adjusted terminating interstate access minutes for such access groups.

The adjusted originating access minutes will be the originating interstate access minutes less the reported resold originating MTS and/or MTS-type service minutes of use as set forth (A)(1) preceding; but not less than zero. The adjusted terminating access minutes will be the terminating interstate access minutes less the reported resold terminating MTS and/or MTS-type service minutes of use as set forth in (A)(2) preceding; but not less than zero.

3. Carrier Common Line Access Service (Cont'd)

3.6 Resold Services (Cont'd)

3.6.4 Rate Regulations Concerning the Resale of MTS and MTS-type Services (Cont'd)

(E) Access Groups - Non Equal Access and Equal Access Offices

When an access group has usage that originates from and/or terminates at both end offices that have been converted to equal access and end offices that have not been converted, both premium and non premium per minute charges as set forth in 3.9 following will apply respectively. The minutes billed Carrier Common Line Access Services charges will be the adjusted originating interstate access minutes plus the adjusted terminating interstate access minutes for such access groups.

The adjusted originating access minutes will be the originating interstate access minutes less the reported resold originating MTS and/or MTS-type service minutes of use as set forth (A)(1) preceding; but not less than zero. The adjusted terminating access minutes will be the terminating interstate access minutes less the reported resold terminating MTS and/or MTS-type service minutes of use as set forth in (A)(2) preceding; but not less than zero.

The adjusted originating access minutes and the adjusted terminating access minutes will be apportioned between premium and non premium access minutes using end-office specific usage data when available, or when usage data are not available, the premium and non premium ratios developed as set forth in 6.7.1(D) following. The Premium and Non Premium per minute charges set forth in 3.9 following will apply to the respective premium and non premium access minutes determined in this manner.

3. Carrier Common Line Access Service (Cont'd)

3.6 Resold Services (Cont'd)

3.6.4 Rate Regulations Concerning the Resale of MTS and MTS-type Services (Cont'd)

(F) When the Adjustment Will Be Applied to Customer Bills

The adjustment as set forth in (C), (D), and (E) preceding will be made to the involved customer account no later than either the next bill date, or the one subsequent to that, depending on when the usage report is obtained.

(G) Conversion of Billed Usage to Minutes

When the MTS and/or MTS-type usage is shown in hours, the number of hours shall be multiplied by 60 to develop the associated MTS and/or MTS-type minutes of use. If the MTS and/or MTS-type usage is shown in a unit that does not show hours or minutes, the customer shall provide a factor to convert the shown units to minutes.

(H) Percent Interstate Use (PIU)

The adjustment as set forth in (C), (D), and (E) preceding will be made to the involved customer account after making the adjustments to the customer account as set forth in 3.8.4 following (PIU).

3. Carrier Common Line Access Service (Cont'd)

3.7 Coin Services

3.7.1 Collection and Remittance of Coin Station Monies

When the customer is provided Operator Trunk-Coin or Combined Coin and Non-Coin or Operator Trunk-Full Feature Optional Features for sent-paid pay telephone access as set forth in Section 6. following, the Telephone Company will collect sent-paid monies from pay telephone stations and will remit monies to the customer as set forth in 3.7.3 following. The Telephone Company will provide message call detail format and bill periods used to determine the monies upon request from the customer.

3.7.2 Provision of Message Call Detail Concerning Coin Station Monies

Where Operator Trunk-Coin or Combined Coin and Non Coin or Operator Trunk-Full Feature Optional Features for sent-paid pay telephone access is provided to the customer and the customer wishes to receive the monies it is due from the monies collected by the Telephone Company from coin pay telephone stations, the customer shall furnish to the Telephone Company, at a location specified by the Telephone Company, the customer message call detail for the customer sent-paid (coin) pay telephone calls in accordance with the Telephone Company collection schedule. The customer message call detail furnished shall be in a standard format established by the Telephone Company. The Telephone Company will provide to the customer the precise details of the required standard format. If, in the course of Telephone Company business, it is necessary to change the standard format, the Telephone Company will provide notification to the involved customer six months prior to the change. If no

3. Carrier Common Line Access Service (Cont'd)

3.7 Coin Services (Cont'd)

3.7.2 Provision of Message Call Detail Concerning Coin Station Monies (Cont'd)

Customer message call detail is received from the customer for each bill period established by the Telephone Company, the Telephone Company will assume there were no customer sent-paid (coin) pay telephone calls for the period. In addition the customer shall furnish a schedule of its charges for sent-paid (coin) calls to the Telephone at a location and date as specified by the Telephone Company. Any change in the customer's schedule of charges shall be furnished to the Telephone Company one day after the change becomes effective.

3.7.3 Payment of Coin Sent-Paid Monies

The Telephone Company will collect the monies from coin pay telephone stations and will determine and remit amounts due to a customer which is provided Operator Trunk-Coin or Combined Coin and Non-Coin or Operator Trunk-Full Feature Optional Features for sent-paid pay telephone access as set forth in Section 6. as follows:.

(A) Bill Period Coin Revenue

The Telephone Company will establish a collection schedule for each coin pay telephone station and will collect the monies from the coin pay stations based on this collection schedule. The monies collected based on this schedule during each bill period established by the Telephone Company will be identified by coin pay telephone station and summed to develop the Bill Period Coin Revenue for each coin record day (i.e., the day a record is prepared and dated to show the amount due the customer).

(This page filed under Transmittal No. 1)

3. Carrier Common Line Access Service (Cont'd)

3.7 Coin Services (Cont'd)

3.7.3 Payment of Coin Sent-Paid Monies (Cont'd)

(B) Total Customer Coin Revenue

The interstate Total Customer Coin Revenue will be determined by the Telephone Company based on the customer message call detail received from the customer for each bill period and the customer's schedule of charges for sent-paid coin calls. Such Total Customer Coin Revenue will be developed each coin record day.

(C) Recourse Adjustments

For each coin record day, the Telephone Company will subtract from the Total Customer Coin Revenue an amount for coin station shortages. Coin station shortages are amounts resulting from unauthorized calling at coin pay telephone stations, use of unauthorized coins (i.e., foreign coins, slugs and improper use of U.S. pennies), unauthorized removal of coins from coin pay telephone stations and coin refunds beyond the Telephone Company's control. Such amount for coin station shortages will be developed by the Telephone Company by multiplying the Total Customer Coin Revenue for each coin record day by a shortage factor. Such amount will be rounded to the nearest penny. The shortage factor will be determined for each customer by dividing the quarterly total coin shortage amount by the quarterly total coin revenue amount (i.e., total coin revenue equals the coin revenue due under exchange tariffs, state toll tariffs, and interstate toll tariffs). The total coin shortage amount and the total revenue amount will be determined by the Telephone Company through a quarterly special study.

3. Carrier Common Line Access Service (Cont'd)

3.7 Coin Services (Cont'd)

3.7.3 Payment of Coin Sent-Paid Monies (Cont'd)

(D) Payment of Net Customer Coin Revenue

The Telephone Company will determine the Net Customer Coin Revenue for each coin record day by subtracting from the Total Customer Coin Revenue determined as set forth in (B) preceding the amount for coin station shortages determined as set forth in (C) preceding. On the date (payment date) determined by adding 45 days to the coin record day, the Telephone Company will remit payment to the customer for the Net Customer Coin Revenue.

(E) Audit Provisions

Upon reasonable written notice by the customer to the Telephone Company, the customer shall have the right through its authorized representative to examine and audit, during normal business hours and at reasonable intervals as determined by the Telephone Company, all such records and accounts as may under recognized accounting practices contain information bearing upon the determination of the amount payable to the customer.

Adjustment shall be made by the proper party to compensate for any errors or omissions disclosed by such examination or audit. Neither such right to examine and audit nor the right to receive such adjustment shall be affected by any statement to the contrary, appearing on checks or otherwise, unless such statement expressly waiving such right appears in a letter signed by the authorized representative of the party having such right and delivered to the other party.

Upon reasonable written notice by the Telephone Company to the customer, the Telephone Company shall have the right through its authorized representative to examine and audit, during normal business hours and at reasonable intervals as determined by the customer and the Telephone Company, such records and accounts as may, under recognized accounting practices, contain information bearing upon the determination of the amount payable to the customer.

3. Carrier Common Line Access Service (Cont'd)

3.7 Coin Services (Cont'd)

3.7.3 Payment of Coin Sent-Paid Monies (Cont'd)

(E) Audit Provisions (Cont'd)

All information received or reviewed by the customer or its authorized representative is to be considered confidential and is not to be distributed, provided or disclosed in any form to anyone not involved in the audit, nor is such information to be used for any other purpose.

3.8 Rate Regulations-Presubscribed Interexchange Carrier Charges (PICCs)

The Multiline Business PICC is billed on a per month basis to the interexchange carrier to whom an end user's Multiline Business access line is presubscribed or to a local service provider that resells services of the Telephone Company. In the event the end user does not have a presubscribed interexchange carrier, the Telephone Company will directly bill the Multiline Business PICC to the end user as set forth in 4.6 following.

When a payphone service is provided local business exchange service (N)
or coin line service, the Multiline Business PICC will not apply. (N)

3. Carrier Common Line Access Service (Cont'd)

3.8 Rate Regulations-Presubscribed Interexchange Carrier Charges (PICCs) (Cont'd)

(A) Multiline Business

Each specific end user provided more than one business service under the Telephone Company's general or Local Exchange Service tariffs to a specific end user in a state by the same telephone company or when Local Exchange Service is provided for use with payphone service, the Multiline Business PICC set forth in 3.10.2(D) applies to each such local exchange service.

Each party that is provided more than one business service under the Telephone Company's general or Local Exchange tariffs, is deemed an end user of a EUCL and the Multiline Business PICC set forth in 3.10.2(D) applies.

Each Primary Rate Interface (PRI) Integrated Digital Network (ISDN) Service provided under the Telephone Company's general or Local Exchange tariffs, shall be assessed the equivalent of PRI ISDN PICC set forth in 3.10.2(E)

3. Carrier Common Line Access Service (Cont'd)

3.8 Rate Regulations-Presubscribed Interexchange Carrier Charges (PICCs) (Cont'd)

(B) Centrex CO and Centrex CO Like Services

Business Centrex CO and Centrex Co-Like Services described in 4.6.(E) following shall be assessed the PICCs set forth in 3.10.2(F) following.

Business Centrex Service consisting of nine or more line shall be assessed Centrex PICC set forth in 3.10.2(F) following on each line.

Business Centrex Service consisting of less than nine lines shall be assessed the Centrex PICC set forth in 3.10.2(F) following on the entire service.

Apportionment of PICCs When Services Contain Multiple Presubscribed Interexchange Carriers (PICs)

If PRI ISDN and Centrex Co and Centrex Co-Like Services have channels presubscribed to various interexchange carriers or channels that are not presubscribed to any interexchange carrier, the Telephone Company will assess the PICC to each identified interexchange carrier based on its proportionate PIC entries to total working channels on the service.

(C) Billing Cycle

The full PICC will be assessed to the interexchange carrier of record as of the beginning of the bill cycle.

(D) Jurisdictional Reporting

The PICC will be billed 100% to the interstate jurisdiction. No PICCs will be prorated between the interstate and intrastate jurisdictions.

3. Carrier Common Line Access Service (Cont'd)

3.9 Rate Regulations-Carrier Common Line Charges (CCLCs)

3.9.1 Billing of Charges

Carrier Common Line charges will be billed to each Switched Access Service provided under this tariff in accordance with the regulations as set forth in 3.8.5 following (Determination of Premium and Non-Premium Charges) except as set forth in 3.6.4 preceding (Resale) and 3.8.4 following (PIU).

3.9.2 Measuring and Recording of Call Detail

When access minutes are used to determine Carrier Common Line charges, they will be accumulated using call detail recorded by Telephone Company equipment except as set forth in 3.8.3 following (Unmeasured ALA or FGA and ATA950 or FGB Usage) and ATANEA or Feature Group C operator and automated operator services systems call detail such as pay telephone sent-paid, operator-DDD, operator-person, collect, credit card, third number and/or other like calls recorded by the customer. The Telephone Company measuring and recording equipment, except as set

3. Carrier Common Line Access Service (Cont'd)

3.9 Rate Regulations-Carrier Common Line Charges (CCLCs) (Cont'd)

3.9.2 Measuring and Recording of Call Detail (Cont'd)

forth in 3.9.3 following (Unmeasured ALA and ATA950 or FGA and B Usage), will be associated with end office or local tandem switching equipment and will record each originating and terminating access minute where answer supervision is received. The accumulated access minutes will be summed on a line by line basis, by line group or by end office, whichever type of account is used by the Telephone Company, for each customer and then rounded to the nearest minute.

3.9.3 Unmeasured ALA or Feature Group A and ATA950 or Feature Group B Usage

When Carrier Common Line Access is provided in association with ALA or Feature Group A or ATA950 or Feature Group B Switched Access Service in Telephone Company offices that are not equipped for measurement capabilities, an assumed average interstate access minutes will be used to determine Carrier Common Line Access Charges. These assumed access minutes are as set forth in 6.7.6 following.

3. Carrier Common Line Access Service (Cont'd)

3.9 Rate Regulations-Carrier Common Line Charges (CCLCs) (Cont'd)

3.9.4 Percent Interstate Use (PIU)

When the customer reports interstate and intrastate use of in-service Switched Access Service, Carrier Common Line charges will be billed only to interstate Switched Access Service access minutes based on the data reported by the customer as set forth in 2.3.14 preceding (Jurisdictional Reports), except where the Telephone Company is billing according to actuals by jurisdiction. Interstate Switched Access Service access minutes will, after adjustment as set forth in 3.6.4 preceding (Resale), when necessary, be used to determine Carrier Common Line Charges as set forth in 3.9.5 following.

3.9.5 Determination of Premium and Non-Premium Charges

After the adjustments as set forth in 3.6.4 and 3.9.4 preceding have been applied, when necessary, to Switched Access Service access minutes, charges for the involved customer account will be determined as follows:

(A) Access minutes for all premium rated Switched Access Service subject to Carrier Common Line charges will be multiplied by the Premium Access per minute rate as set forth in 3.10.1(A) following.

3. Carrier Common Line Access Service (Cont'd)

3.9 Rate Regulations-Carrier Common Line Charges (CCLCs) (Cont'd)

3.9.5 Determination of Premium and Non-Premium Charges (Cont'd)

(B) Access minutes for all non-premium rated Switched Access Service subject to Carrier Common Line charges will be multiplied by the Non-Premium Access per minute rate as set forth in 3.10.1(B) following.

(C) Carrier Common Line charges shall not be reduced as set forth in 3.6.1 preceding unless Switched Access Charges, as set forth in Section 6. following, are applied to the customer's Switched Access Service.

(D) Terminating Premium Access or Non-Premium Access, per minute charge(s) apply to:

- all terminating access minutes of use;
- all originating access minutes of use associated with ALA or FGA Access Services where the off-hook supervisory signaling is forwarded by the customer's equipment when the called party answers;
- all originating access minutes of use associated with calls placed to 700, 800, and 900 numbers, less those originating access minutes of use associated with calls placed to 700, 800, and 900 numbers for which the customer furnishes for each month a report of either the number of calls or minutes or a report of the percent of calls or minutes that terminate in a Switched Access Service that is assessed Carrier Common Line charges.

3. Carrier Common Line Access Service (Cont'd)

3.9 Rate Regulations-Carrier Common Line Charges (CCLCs) (Cont'd)

3.9.5 Determination of Premium and Non-Premium Charges (Cont'd)

(D) (Cont'd)

When the customer makes this report available to the Telephone Company in advance of billing, these minutes of use will be charged on the current bill as originating minutes of use as set forth in (F) following. If a billing dispute arises concerning the customer provided report, the Telephone Company will request the customer to provide the data the customer used to develop the report. The Telephone Company will not request such data more than once a year. The customer shall supply the data within 30 days of the Telephone Company request.

When this report is not available to the Telephone Company until after billing, it shall be used by the Telephone Company to calculate and post a credit to the customer's account. The credit shall be posted to the customer's account within 30 days of receipt of the report. The credit shall be calculated by multiplying the number of access minutes of use, for which a credit is determined to be applicable, times the difference between the terminating and originating Carrier Common Line charges in effect when the calls were completed.

3. Carrier Common Line Access Service (Cont'd)

3.9 Rate Regulations-Carrier Common Line Charges (CCLCs) (Cont'd)

3.9.5 Determination of Premium and Non-Premium Charges (Cont'd)

(E) The originating Premium Access or Non-Premium Access, per minute charge(s) apply to:

- all originating access minutes of use;

- less those originating access minutes of use associated with ALA or FGA Access Services where the off-hook supervisory signaling is forwarded by the customer's equipment when the called party answers;

- less all originating access minutes of use associated with calls placed to 700, 800, and 900 numbers;

- plus all originating access minutes of use associated with calls placed to 700, 800, and 900 numbers for which the customer furnishes for each month a report of either the number of calls or minutes or a report of the percent of calls or minutes that terminate in a Switched Access Service that is assessed Carrier Common Line charges, and for which a corresponding reduction in the number of terminating access minutes of use has been made as set forth in (D) preceding.

3. Carrier Common Line Access Line Service (Cont'd)

3.10 Rates and Charges

3.10.1 Carrier Common Line Access Charges

(A) Premium Access

- Terminating per Access Minute	$.000000
- Originating per Access Minute	$.000000

(B) Non-Premium Access

- Terminating per Access Minute	$.000000
- Originating per Access Minute	$.000000

3.10.2 Presubscribed Interexchange Carrier Charges

		USOC	Rate Per Month
(A)	Multi-Line Business	P1CCM	0.00
(B)	ISDN		
	-PRI-per service	P1CCP	0.00
(C)	Centrex CO and Centrex CO-Like		
	-Nine or more lines, per line	P1CC9	0.00
	-Eight or less lines, per service		0.00

USOCs: P1CC2 through P1CC8, depending on the number of lines.

(This page filed under Transmittal No. 1)

(This page filed under Transmittal No. 6)

4. End User Access Service

The Telephone Company will provide End User Access Service to end users who obtain local telephone exchange service from the Telephone Company under its general and/or local exchange tariffs.

4.1 General Description

End User Access Service provides for the use of an End User Common Line (EUCL) and may include EUCL Charges, Federal Universal Service Fee (FUSF) Charges, End User Digital Port Charges and/or Presubscribed Interexchange Carrier Charges (PICC).

4.2 Limitations

The following items are not provided as part of End User Access Service:

A Telephone number

Detail billing

Directory listings

Intercept arrangements

4.3 Undertaking of the Telephone Company

The Telephone Company will provide use of an EUCL at rates and charges as set forth in 4.7 following, as follows:

(A) Use of an EUCL by an end user is provided in connection with interstate Access Services provided under this tariff. Such use will be provided when the end user obtains local telephone exchange service.

(B) The Telephone Company will be responsible for contacts and arrangements with customers for the billing of End User Access charges.

4.4 Obligations of the End User

(A) When the end user is a Radio Common Carrier (RCC), or a Maritime Radio Common Carrier (MRCC), it shall designate whether the local exchange services it is provided by the Telephone Company are used as access lines for its services or used as administrative lines.

4. End User Access Service (Cont'd)

4.5 Payment Arrangements and Credit Allowances

(A) Minimum Period

The minimum period for which EUCL End User Access is provided to an End User and for which charges are applicable is the same as that in the general and/or local exchange tariffs for the associated local telephone exchange service.

(B) Cancellation of Application

End User Access is cancelled when the order for the associated local telephone exchange service is cancelled. No cancellation charges apply.

(C) Changes to Orders

When changes are made to orders for the local telephone exchange service associated with End User Access, any necessary changes will be made for End User Access. No charges will apply.

4. End User Access Service (Cont'd)

4.6 Rate Regulations

This section contains the specific regulations governing the rates and charges which apply for End User Access Service. The EUCL Charge is billed on a per month basis to the end user customer of the Telephone Company or a local service provider that resells services of the Telephone Company (herein referred to as end user) for the associated local exchange service based upon the local exchange service types set forth in 4.6.1 following.

Federal Universal Service Fee (FUSF) Charges are billed on a per month and/or per occurrence basis to the end user customer of the Telephone Company for the associated local exchange service based upon the local exchange service types set forth in 4.6.1 following. Local service providers that resell services of the Telephone Company are exempt from the FUSF Charge. (C) (C)

The PICC is billed on a per month basis to an end user when the end user's access line has not been presubscribed to an interexchange carrier. In the event an end user has presubscribed to an interexchange carrier, the PICC is assessed to the interexchange carrier to whom the end user's access line is presubscribed. These rates and charges apply as set forth in 4.7 following.

The End User Port Charge is billed on a per month basis to an end user for each such local exchange service line port that exceeds the cost of a line port used for basic, analog service.

Specific rates and charges for EUCL Charges, FUSF Charges, and End User Port Charges are set forth in 4.7.

4.6.1 End User Common Line (EUCL) Rate Elements

(A) Primary Residential

For each local exchange service provided as residential service under the general or local exchange service tariffs the EUCL-Primary Residential charge applies to one line at a service location.

When a local exchange service is provided as a multiparty service under the general or local exchange service tariffs, the first party at a service location is deemed to be a user of an EUCL and the EUCL-Primary Residential rate applies. Each additional party at a service location is assessed the EUCL-Non-Primary Residential rate.

4. End User Access Service (Cont'd)

4.6 Rate Regulations (Cont'd)

4.6.1 End User Common Line Rate Elements (Cont'd)

(A) Primary Residential (Cont'd)

When an end user is provided a local residence exchange service by the Telephone Company, the End User Common Line-Primary Residential rate shall be reduced by 100% for qualifying low income subscribers meeting low income eligibility criteria established by the state commission.

When a local exchange service provided as remote call forwarding residential service under the general and/or local exchange service tariffs, End User Access charges do not apply.

(B) Non-Primary Residential and BRI ISDN

Each additional local exchange service provided at the same service location, the End User Common Line-Non-Primary Residential charge applies, as set forth in 4.7(B) following.

When a non-primary residential line is provided as a multiparty service, each additional party is assessed the End User Common Line-Non-Primary Residential charge, as set forth in 4.7(B) following, applies to each such party.

When local exchange service is provided as Basic Rate Interface (BRI) integrated services digital network (ISDN) service, one End User Common Line-Non-Primary Residential charge will apply to each such local exchange service.

(C) Business

For each local exchange service provided as local business service under the general and/or local exchange service tariffs, the End User Common Line (EUCL) Residence/Single Line Business Subscriber - Individual line or trunk rate as set forth in 4.7(A) following applies to each such party.

When a local exchange service is provided as a multiparty service under the general and/or local exchange service tariffs, each party is deemed to be a user of an End User Common Line and the End User Common Line - (EUCL) Residential/Single Line Business Subscriber-party rate for the number of parties involved, as set forth in 4.7(A) following, applies to each such party.

(This page filed under Transmittal No. 1)

4. End User Access Service (Cont'd)

4.6 Rate Regulations (Cont'd)

4.6.1 End User Common Line Rate Elements (Cont'd)

(C) Business (Cont'd)

When a local exchange service is provided as remote call forwarding business service under the general and/or local exchange service tariffs, End User Access charges do not apply.

For each local exchange service other than local exchange service used for administrative purposes, provided to Radio Common Carriers and/or Maritime Radio Common Carriers as access lines for their services under the general and/or local exchange service tariffs, End User Access charges do not apply.

(D) Multiline Business

When an End User is provided more than one local business exchange service in a state by the same Telephone Company under the general and/or local exchange service tariffs, the End User Common Line (EUCL)-Multiline Business Subscriber-Individual line or trunk rate as set forth in 4.7(C) following applies to each such local business exchange service.

When an End User is provided more than one local telephone business exchange service in a state by the same Telephone Company as pay telephone access line service under the general and/or local exchange service tariffs, the End User Common Line (EUCL)-Multiline Business Subscriber line rate as set forth in 4.7(C) following applies to each such pay telephone access line local business exchange service.

When an End User is provided more than one local business exchange service in a state by the same Telephone Company as a multiparty service under the general and/or local exchange service tariffs, each party is deemed to be a user of an EUCL and the End User Common Line (EUCL) Multiline Business Subscriber-party rate for the number of parties involved, as set forth in 4.7(C) following, applies to each such party.

When local exchange service is provided as Primary Rate Interface (PRI) integrated services digital network (ISDN) service, five End User Common Line-Multiline Business individual line or trunk charges apply to each such local exchange service.

(This page filed under Transmittal No. 1)

4. End User Access Service (Cont'd)

4.6 Rate Regulations (Cont'd)

4.6.1 End User Common Line Rate Elements (Cont'd)

(E) Centrex CO and CO-like

For business Centrex CO and Centrex CO-like service lines or trunks installed or on order prior to July 28, 1983 and Centrex Dormitory (Residence) Service office lines or trunks, the EUCL- Centrex CO rate as set forth in 4.7(E) (T)
following applies to each line or trunk. For such lines (C)
installed on or after July 28, 1983, the EUCL-Multiline (C)
Business Subscriber rate as set forth in 4.7(D)following (C)
applies to each line or trunk. (C)

For Centrex Dormitory (Residence) Service dormitory (residential) quarters lines or trunks, the End User Common Line (EUCL) - Residence Subscriber - Individual Line or trunk rate and Non-Primary Residential charges as set forth in 4.7(A) and (B) following will apply to the student or faculty dormitory (residential) quarters.

Centrex CO is a service that (1) uses a portion of a Telephone Company switch located at the Telephone Company central office to meet the customer's internal needs and serves as the customer's interface with the local and interexchange networks and (2) links the customer's main stations to the Telephone Company switch with subscriber loops.

Centrex CO-like services are services (eg. ESSEX, Centron, Centraflex, Airport Service, Hotel-Motel Service) that operate in a manner that is the same as Centrex CO and (1) are provided using switches located at Telephone Company central offices and (2) link customer main stations to the Telephone Company switch with subscriber loops.

Centrex Dormitory (Residential) Service is a service to a college or university or school that serves both the university, college or school offices and the students or faculty dormitory

4. End User Access Service (Cont'd)

4.6 Rate Regulations (Cont'd)

4.6.1 End User Common Line Rate Elements (Cont'd)

(F) End User Port Charge

When local exchange service is provided using line ports for non-basic analog services such as ISDN, the applicable End User Port Charge will apply to each such local exchange service.

(1) BRI ISDN Port

The BRI ISDN Port provides BRI 2B+D features. All terminations are 2-wire and dial tone signaling is provided via the "D" channel.

(2) PRI ISDN Port

The PRI ISDN Port provides 23B + 1D or 24B channels. Both line and trunk features are available via the DS1 interface.

Certain revised material previously appearing on this page now appears on Original Page 4-8.1.

4. End User Access Service (Cont'd)

4.6 Rate Regulations (Cont'd)

4.6.1 End User Common Line Rate Elements (Cont'd)

(G) Basic Federal Universal Service Fee (FUSF)

(1) Residential/Single Line Business (SLB)/ ISDN BRI

For each local exchange service as described in Sections 4.6.1(A),4.6.1(B)and 4.6.1(C)preceding under the general and/or local exchange service tariffs, a Basic Federal Universal Service Fee (FUSF)Charge applies to each such local exchange line as set forth in Section 4.7(I)following.

Lifeline customers as set forth in Section 4.6.1(A) preceding are exempt from the Basic FUSF Charge.

(2) Multi-line Business / PBX Trunks / PRI ISDN

Multi-line
For each local exchange service as described in Sections 4.6.1(D) preceding under the general or local exchange service tariffs the Basic FUSF Multiline Business Charge applies to each line as set forth in Section 4.7(I) following, unless otherwise noted below. (D)

PBX
Multi-line business customers with PBX trunks will be assessed a Basic FUSF PBX charge as set forth in Section 4.7(I) following. (D)

PRI ISDN
When local exchange service is provided as Primary Rate Interface (ISDN) service, the Basic FUSF PRI ISDN Charge applies to each such local exchange service as set forth in Section 4.7(I) following. (D)

Centrex
When a local exchange service is provided as Centrex or Centrex CO-like service as described in Section 4.6(E) preceding, under the general or local exchange service tariffs, a Basic Centrex FUSF Charge applies to each Centrex line as set forth in Section 4.7(I) following. (D)

4. End User Access Service (Cont'd)

4.6 Rate Regulations (Cont'd)

4.6.1 End User Common Line Rate Elements (Cont'd)

(G) Federal Universal Service Fee (FUSF) (Cont'd)

(3)

(4) Other Non-recurring FUSF Charges

In addition to the applicable charges above, when a customer is assessed interstate end user charges identified in the table below, a FUSF recovery charge will also apply as set forth in Section 4.7(I) following. For example, customers assessed the PIC change charge as specified in Section 13.3.3.(b)(5)(e)(ii) will also be assessed the PIC change FUSF recovery charge as set forth in Section 4.7(I) following.

Tariff Reference	Rate Element
13.3.3(A)	PIC Change Charge

To the extent an IC is assessed a PIC Change Charge, the Non-recurring FUSF charge will also apply to the IC.

(5) Other Recurring FUSF Charges

A percentage surcharge factor is assessed monthly on billed recurring charges of end user services other than surcharges described in Section 4.

USF Surcharge factor: .102 (R)

(This page filed under Transmittal No. 103)

4. End User Access Service (Cont'd)

4.7 Rates and Charges

The rates for End User Access are:

(A) End User Common Line (EUCL) - Primary Residence Subscriber

	USOC	Rates Per Month
- Individual line or trunk, each	9ZEU1	$5.25(R)
- Two-party, each	9ZEU1	5.25(R)
- Eight-party, each	9ZEU1	5.25(R)

(B) End User Common Line (EUCL)

Non-Primary Residence Subscriber	USOC	Rates Per Month
- Individual line or trunk, each	9ZEU2	$5.25(R)
- Two-party, each	9ZEU2	5.25(R)
- Eight-party, each	9ZEU2	5.25(R)
- BRI ISDN Facility, each wire pair	9ZEU5	5.25(R)

(C) End User Common Line (EUCL) -Single Line Business

	USOC	Rates Per Month
- Individual line or trunk, each	9ZEU3	$5.25(R)
- Two-party, each	9ZEU3	5.25(R)
- Eight-party, each	9ZEU3	5.25(R)

(D) End User Common Line (EUCL) - Multiline Business Subscriber

	USOC	Rates Per Month
- Individual line or trunk, each	9ZEU4	$5.77(R)
- Two-party, each	9ZEU4	5.77(R)
- Eight-party, each	9ZEU4	5.77(R)
- Public Telephone Access line, each	9ZEU4	5.77(R)
- PRI ISDN Facility, each	9ZEU6	28.85(R)

(E) End User Common Line (EUCL) - Centrex CO and CO-like (Installed or on order prior to July 28, 1983)

	USOC	Rates Per Month
- Individual line or trunk, each	9ZEU4	$5.77(R)

(This page filed under Transmittal No. 67)

4. End User Access Service (Cont'd)

4.7 Rates and Charges (Cont'd)

(G) Presubscribed Interexchange Carrier Charges

	USOC	Rate Per Month
(A) Multi-Line Business	9PCC4	0.00
(B) ISDN		
-PRI-per service	9PCC6	0.00
(C) Centrex CO and Centrex CO-Like		
-Nine or more lines, per line	9PCC7	0.00
-Eight or less lines, per service	9PCC9	0.00

(H) End User Port Charge

	USOC	Rate Per Month
(1) BRI ISDN Port - Per Port	9SDN1	$3.90
(2) PRI ISDN Port - Per Port	9SDN2	$36.29

(I) Basic Federal Universal Service Fee (FUSF):

	USOC	Rate Per Month
(1) Residential	9PZRS	$ 0.53 (R)
(2) Single-Line Business	9PZBU	$ 0.53 (R)
(3) ISDN BRI	9PZL1	$ 0.93 (R)
(4) Multiline Business	9PZLM	$ 1.21 (R)
(5) PRI ISDN	9PZP1	$ 9.75 (R)
(6) PBX	9PZPX	$ 1.21 (R)
(7) Centrex CO and CO-Like	9PZCX	$ 0.13 (R)

(8) Other FUSF Recovery Charges	Rate Per Occurrence
PIC Change Charge	$ 0.51(R)

(This page filed under Transmittal No. 103)

ACCESS SERVICE

(This page filed under Transmittal No. 64)

5. Ordering Options for Switched and Special Access Service

5.1 General

This section sets forth the regulations and order related charges for Access Orders for Switched and Special Access Services and the Expanded Interconnection Service Channel Termination (EISCT). These charges are in addition to other applicable charges as set forth in other sections of this tariff.

An Access Order is an order to provide the customer with Switched or Special Access Service, EISCT or to provide changes to existing services.

5.1.1 Ordering Conditions

A customer may order any number of services of the same type and between the same premises on a single Access Order, (N)
except when requested activity involves more than ten Carrier Identification Codes. An additional Access Order is required for each additional group of ten Carrier Identification codes requiring establishment, removal, or changes. All details (N)
for services for a particular order must be identical except for those for multipoint service.

The customer shall provide all information necessary for the Telephone Company to provide and bill for the requested service. In addition to the order information required in 5.2 following, the customer must also provide:

- Customer name and premises address(es).

- Billing name and address (when different from customer name and address).

- Customer contact name(s) and telephone number(s) for the following provisioning activities: order negotiation, order confirmation, interactive design, installation and billing.

- Orders for Entrance Facilities or Direct Trunked Transport shall be ordered at a DS1 or DS3 level when ordered separately from Feature Groups and Access Arrangements.

- Orders for Entrance Facilities or Direct Trunked Transport in conjunction with Feature Groups or Access Arrangements shall be ordered at a DSO or DS1 level. The number of DSls provisioned will be determined be the Telephone Company based on the numbers of lines/trunks ordered by the customer.

- Direct Trunked Transport shall be ordered with or without Entrance Facilities.

- Tandem Switched Transport shall be ordered in trunks.

(This page filed under Transmittal No. 5)

5. Ordering options for Switched and Special Access Service (Cont'd)

5.1 General (Cont'd)

5.1.1 Ordering Conditions (Cont'd)

Except as provided below, the Telephone Company shall permit a requesting telecommunications carrier to commingle an unbundled network element or a combination of unbundled network elements with wholesale services obtained from the Telephone Company, to the extent provided by and subject to the terms and conditions of the requesting telecommunications carrier's interconnection agreement with the Telephone Company (or, if applicable, of the Telephone Company intrastate tariffs).[1]

The Telephone Company need not provide access to (1) an unbundled DS1 loop in combination, or commingled, with a dedicated DS1 transport or dedicated DS3 transport facility or service, or to an unbundled DS3 loop in combination, or commingled, with a dedicated DS3 transport facility or service, or (2) an unbundled dedicated DS1 transport facility in combination, or commingled, with an unbundled DS1 loop or a DS1 channel termination service, or to an unbundled dedicated DS3 transport facility in combination, or commingled, with an unbundled DS1 loop or a DS1 channel termination service, or to an unbundled DS3 loop or a DS3 channel termination service, unless the requesting telecommunications carrier certifies that all of the following conditions are met[1]

(1) The requesting telecommunications carrier has received state certification to provide local voice service in the area being served or, in the absence of a state certification requirement, has complied with registration, tariffing, filing fee, or other regulatory requirements applicable to the provision of local voice service in that area.

(2) The following criteria are satisfied for each combined circuit, including each DS1 circuit, each DS1 enhanced extended link, and each DS1-equivalent circuit on a DS3 enhanced extended link:

[1] In the event the Commission or a court, pursuant to any regulatory or judicial review of the Commission's *Review of the Section 251 Unbundling Obligations of Incumbent Local Exchange Carriers*, Report and Order and Order on Remand and Further Notice of Proposed Rulemaking, CC Docket No. 01-338, FCC 03-36, para. 581 (released Aug. 21, 2003) (T)
(*Triennial Review Order*), vacates, stays, remands, reconsiders, or rejects the portion of the Triennial Review Order requiring ILECs to permit commingling, the terms and conditions of this tariff authorizing commingling, which are identified with a footnote, shall cease to be effective as of the effective date of the Commission order or the issuance of the court's mandate. In that event, the Telephone Company will provide customers that have commingled UNE(s) and/or UNE Combination(s) with wholesale services obtained under this Tariff written notice that, within 30 days, customers must either convert such UNE(s) or UNE Combination(s) to a comparable service, or disconnect such UNE(s) and/or UNE Combination(s) from those wholesale services. Failure to provide the Telephone Company instructions to convert or disconnect such UNE(s) and/or UNE Combination(s) within 30 days, as described above, shall be deemed authorization to convert the UNE(s) and/or UNE Combination(s) to comparable access services at month-to-month rates.

5. Ordering options for Switched and Special Access Service (Cont'd)

5.1 General (Cont'd)

5.1.1 Ordering Conditions (Cont'd)

(i) Each circuit to be provided to each end user customer will be assigned a local number prior to the provision of service over that circuit;

(ii) Each DS1-equivalent circuit on a DS3 enhanced extended link must have its own local number assignment, so that each DS3 must have at least 28 local voice numbers assigned to it;

(iii) Each circuit to be provided to each end user customer will have 911 or E911 capability prior to the provision of service over that circuit;

(iv) Each circuit to be provided to each end user customer will terminate in a collocation arrangement that meets the requirements detailed below;

(v) Each circuit to be provided to each end user customer will be served by an interconnection trunk that meets the requirements detailed below;

(vi) For each 24 DS1 enhanced extended links or other facilities having equivalent capacity, the requesting telecommunications carrier will have at least one active DS1 local service interconnection trunk that meets the requirements detailed below; and

(vii) Each circuit to be provided to each end user customer will be served by a switch capable of switching local voice traffic.

(1) In the event the Commission or a court, pursuant to any regulatory or judicial review of the Commission's *Review of the Section 251 Unbundling Obligations of Incumbent Local Exchange Carriers*, Report and Order and Order on Remand and Further Notice of Proposed Rulemaking, CC Docket No. 01-338, FCC 03-36, para. 581 (released Aug. 21, 2003) (*Triennial Review Order*), (T) vacates, stays, remands, reconsiders, or rejects the portion of the Triennial Review Order requiring ILECs to permit commingling, the terms and conditions of this tariff authorizing commingling, which are identified with a footnote, shall cease to be effective as of the effective date of the Commission order or the issuance of the court's mandate. In that event, the Telephone Company will provide customers that have commingled UNE(s) and/or UNE Combination(s) with wholesale services obtained under this Tariff written notice that, within 30 days, customers must either convert such UNE(s) or UNE Combination(s) to a comparable service, or disconnect such UNE(s) and/or UNE Combination(s) from those wholesale services. Failure to provide the Telephone Company instructions to convert or disconnect such UNE(s) and/or UNE Combination(s) within 30 days, as described above, shall be deemed authorization to convert the UNE(s) and/or UNE Combination(s) to comparable access services at month-to-month rates.

5. Ordering options for Switched and Special Access Service (Cont'd)

5.1 General (Cont'd)

5.1.1 Ordering Conditions (Cont'd)

A collocation arrangement meets the requirements in (iv) above if it is:

(1) Established pursuant to section 251(c)(6) of the Act and located at the Telephone Company's premises within the same LATA as the customer's premises, when the Telephone Company is not the collocator; and

(2) Located at a third party's premises within the same LATA as the customer's premises, when the Telephone Company is the collocator.

An interconnection trunk meets the requirements of (v) and (vi) above in this certification if the requesting telecommunications carrier will transmit the calling party's number in connection with calls exchanged over the trunk and the trunk is located in the same LATA as the customer premises served by the EEL.[1]

[1] In the event the Commission or a court, pursuant to any regulatory or judicial review of the Commission's *Review of the Section 251 Unbundling Obligations of Incumbent Local Exchange Carriers*, Report and Order and Order on Remand and Further Notice of Proposed Rulemaking, CC Docket No. 01-338, FCC 03-36, para. 581 (released Aug. 21, 2003) (*Triennial Review Order*), (T)
vacates, stays, remands, reconsiders, or rejects the portion of the Triennial Review Order requiring ILECs to permit commingling, the terms and conditions of this tariff authorizing commingling, which are identified with a footnote, shall cease to be effective as of the effective date of the Commission order or the issuance of the court's mandate. In that event, the Telephone Company will provide customers that have commingled UNE(s) and/or UNE Combination(s) with wholesale services obtained under this Tariff written notice that, within 30 days, customers must either convert such UNE(s) or UNE Combination(s) to a comparable service, or disconnect such UNE(s) and/or UNE Combination(s) from those wholesale services. Failure to provide the Telephone Company instructions to convert or disconnect such UNE(s) and/or UNE Combination(s) within 30 days, as described above, shall be deemed authorization to convert the UNE(s) and/or UNE Combination(s) to comparable access services at month-to-month rates.

5. Ordering options for Switched and Special Access Service (Cont'd) (N)

5.1 General (Cont'd)

5.1.1 Ordering Conditions (Cont'd) (N)

The Telephone Company will establish a confirmed due date when the customer has provided a firm commitment for the service and sufficient information to allow for the processing of the Access Order. The date on which the confirmed due date is established is considered to be the Application Date. The Telephone Company will provide a firm order confirmation to the customer and will advise the customer of the Application Date and the Confirmed Due Date.

The time required to provision the service (i.e., the interval between the Application Date and the Confirmed Due Date) is known as the service interval. Such intervals will be established in accordance with service date interval guidelines.

Schedules that specify installation intervals will also specify the services and quantities of the services that can be provided as specified in Section 5.1.1.1(B) and (C). The Telephone Company will adhere to the intervals as specified in Section 5.2.2(D)(1), except during circumstances beyond its direct control (i.e., acts of God, governmental requirements, work stoppages and civil commotions). Standard Intervals only (N)
apply when facilities and equipment are available. (N)

Access Services will be installed during Telephone Company business days. If a customer requests that installation be done outside of normally scheduled work hours, and the Telephone Company agrees to this request, the customer will be subject to applicable charges described in 13.2 (Additional Labor).

5. Ordering options for Switched and Special Access Service (Cont'd)

5.1 General (Cont'd)

5.1.1.1 Negotiated Interval

The Telephone Company will negotiate a service date interval with the customer when:

(A) There is no standard interval for the service, or

(B) The quantity of Access Services ordered exceeds the quantities specified in Section 5.2.2(D)(1), or

(C) The customer requests a service date beyond the applicable standard interval service date.

Standard Intervals	
Analog/Voice Grade/DS0	10 days
DS1/Fractional DS1	7 days
DS3	7 days[1] (C)
OC3 and OC12	7 days[1] (N)

[1] Interval only applies where facilities and equipment exist. When facilities and equipment do not exist the interval is dependent upon the complete installation of new facilities and equipment. (N) (N) (N) (N)

The Telephone Company will offer a service date based on the type and quantity of Access Services the customer has requested. The negotiated interval may not exceed by more than six months the standard interval service date, or, when there is no standard interval, the Telephone Company offered service date.

Certain Telephone Company critical dates are associated with the service interval. These dates provide a means to determine the provisioning costs incurred at any point during the service interval. The critical dates for each Access Order will be provided to the customer on the firm order confirmation. These dates will be used to develop cancellation charges as set forth in 5.2.3 following. Cancellation charges are calculated by determining the provisioning costs the Telephone Company has incurred as of the last critical date completed.

5. Ordering Options for Switched and Special Access Service (Cont'd)

5.1 General (Cont'd)

5.1.2 Provision of Other Services

(A) In addition to Switched and Special Access Services, other services offered under the provisions of this tariff may be ordered with an Access Order or as set forth in (B) following. The rates and charges for these services, as set forth in other sections of this tariff, will apply in addition to the ordering charges set forth in this section and the rates and charges for the Access Service with which they are associated.

(B) With the agreement of the Telephone Company, other services set forth in (A) preceding may subsequently be added to the order at any time, up to and including the service date for the Access Service. When added subsequently, charges for a design change as set forth in 5.2.2(C) following will apply when an engineering review is required.

(C) Additional Engineering is not an ordering option, but will be applied to an Access order when the Telephone Company determines that Additional Engineering is necessary to accommodate a customer request. Additional Engineering will only be required as set forth in 13.1.

5. Ordering Options for Switched and Special Access Service (Cont'd)

5.1 General (Cont'd)

5.1.2 Provision of Other Services (Cont'd)

(C) (Cont'd)

following. When it is required, the customer will be so notified and will be furnished with a written statement setting forth the justification for the Additional Engineering as well as an estimate of the charges. If the customer agrees to the Additional Engineering, a firm order will be established. If the customer does not want the service or facilities after being notified that Additional Engineering of Telephone Company facilities is required, the order will be withdrawn and no charges will apply. Once a firm order has been established, the total charge to the customer for the Additional Engineering may not exceed the estimated amount by more than 10%.

The regulations, rates and charges for Additional Engineering are as set forth in 13.1 following and are in addition to the regulations, rates and charges specified in this section.

5.1.3 Special Construction

The regulations, rates and charges for special construction are set forth in Pacific Bell's Tariff F.C.C. No. 2 and are in addition to the regulations, rates and charges specified in this section. (T)

5. Ordering Options for Switched and Special Access Service (Cont'd)

5.2 Access Order

An Access Order is used by the Telephone Company to provide a customer Access Service as follows:

- Switched Access Services as set forth in 6. following,
- Special Access Services as set forth in 7. following, (D)
- Other Services as set forth in 5.1.2 preceding, and (T)
- TIPToP Services as set forth in 24, following (N)

If a PIU is required, the customer must provide its PIU when placing an order for Access Services in accordance with Section 2.3.14 of this tariff.

(A) The following applies when placing an order for all Switched Access Services:

(1) When ordering EF the customer shall specify:

(a) Whether DSO, DS1 or DS3.

(b) The multiplexing required for DS3 to DS1 or DS1 to DSO.

(c) Customer designated premises, hub, type of service, Interface and technical specifications.

(2) When ordering DTT the customer shall specify:

(a) Whether DSO, DS1 or DS3.

(b) The multiplexing required for DS3 to DS1 or DS1 to DSO.

(c) Customer designated premises, hub, switch location (i.e., Access Tandem or End Office), type of service, Interface and technical specifications.

(d) The channel facility assignment when Direct trunked transport is interconnected with an existing Entrance Facility.

(e) The number of trunks.

5. Ordering Options for Switched and Special Access Service (Cont'd)

5.2 Access Order (Cont'd)

(4) When ordering the Switched Access EISCT the customer shall specify:

(a) Whether DS1 or DS3.
(b) The multiplexing from DS1 to DS3; DS1 to DS0/vg.
(c) The location of the EIS Equipment, channel assignments, hub, type of service, interface and technical specifications, if appropriate.

(5) For the DNAL Switched Access BSA, the customer shall specify:

(a) the designated customer premises,
(b) the channel interface.
(c) the Access Line Arrangement of Access Trunk Arrangement to be associated with the DNAL.

(6) For ALA or Feature Group A Lines, the customer shall specify:

(a) the number of lines and the first point of switching (i.e., dial tone office),
(b) the directionality of the service and the Switched Transport options and Switching options desired,
(c) whether the off-hook supervisory signaling is provided by the customer's equipment before the called party answers, or is forwarded by the customer's equipment when the called party answers,
(d) which lines are to be arranged in multiline hunt group arrangements and which lines are to be provided as single lines.

(7) For ATA950, ATANEA and ATAXXX or Feature Group B, C and D Trunks, the customer shall specify:

(a) the number of trunks and the end office when direct routing to the end office is desired, or the access tandem switch when routing is desired via an access tandem switch, and the desired Switched Transport and Local Switching options,
(b) When ordering ATA950, ATANEA, ATAXXX or FGB, FGC, or FGD trunks to an access tandem, the customer has the option to provide the Telephone Company an estimate of the amount of traffic it will generate to and/or from each end office subtending the access tandem to assist the Telephone Company in its own efforts to project further facility requirements,
(c) the customer is responsible to assure that sufficient access facilities have been ordered to handle its traffic,
(d) the traffic type using the same categories as described in 6.1.1(C) following, to enable efficient provisioning and billing functions.

5. Ordering Opotions for Switched and Special Access Service

5.2 Access Order (Cont'd)

For Feature Group D or Access Trunk Arrangement 1OXXX Switched Access Service with Common Channel Signaling Access Capability (CCSAC), the customer shall work cooperatively with the Telephone Company to determine the number of SS7 Signaling Connections the customer must order to handle its signaling traffic. The customer shall reference existing SS7 Signaling Connections or related Signaling Connection orders. The customer must also provide any CCSAC Common Switching optional features.

For Feature Group D or Access Trunk Arrangement IOXXX trunks ordered with SS7 signaling, the customer shall provide STP point codes, switching point codes, trunk circuit identification codes and switch type.

For SS7 Signaling Connections, the customer shall specify the level of diversity in its network, as defined in Bellcore Common Channel Signaling Network Specification Technical Reference TR-TSV-000905. Customers who specify signaling point of interface premises where utilities meeting these requirements do not exist have the option of ordering Special Construction out of Pacific Bell's Tariff F.C.C No. 129.

CCSAC Testing requirements are as described in section 6.1.7 following.

All orders for CCSAC and SS7 Signaling Connections will be provisioned on negotiated service intervals.

For 500 Access Service, a Feature Group D or Access Trunk Arrangement customer shall order the service in the same manner as set forth in 6.2.5 following. The customer must specify on the access order one of the three calling options (1+ 500, 0+ 500 or ' both), when placing an order for 500 Access Service on existing or new trunks. All 500 number assignments and administration shall be in accordance with the North American Numbering Plan (NANP).

5. Ordering Options for Switched and Special Access Service

5.2 Access Order (Cont'd)

For Toll Free or 900 Access Service, the customer shall order in the same manner which is set forth preceding for ordering ATAXXX or Feature Group D. Additionally, for 900 Access Service, when new NXX(S) are to be opened in the entire LATA or market area or when existing NXX (s) are to be deleted, and such change is to occur coincident with the service date established for the order, the customer shall provide such information when placing the order for service. Customer assigned NXX codes which have not been ordered will be blocked. If the change is to occur absent the requirement for additional capacity (i.e., busy hour minutes of capacity or quantities of trunks), the customer shall notify the Telephone Company of the change as set forth in 6.6.1 following.

All 900 number assignments and administration shall be in accordance with the North American Numbering Plan (NANP). All Toll Free number assignments and administration will be performed by the Toll Free Access Service Management System (SMS).

Special Access Service may be ordered for connection with an ALA, ATA, FGA, FGB, FGC or FGD Switched Access Service at Telephone Company designated WATS Serving offices (WSos) for the provision of WATS or WATS-type Services and may be ordered separately by a customer other than the customer which orders the ALA, ATA, FGA, FGB, FGC or FGD Switched Access Service. For the Special Access Service the customer shall specify the customer designated premises at which the Special Access Service terminates, the type of line (i.e., two-wire or four-wire) , the type of calling (i.e., originating, terminating, or two way) and the type of Supervisory Signaling. When the optional screening, switching and/or recording functions are not provided at the customer serving wire center, Channel Mileage, as set forth in 7.2.1 following, must be ordered between that wire center and the nearest WSO where the screening, switching and/or recording functions can be provided.

5. Ordering Options for Switched and Special Access Service (Cont'd)

5.2 Access Order (Cont'd)

- For Directory Assistance Service, the customer shall specify which ATA or Feature Group B, C or D Switched Access Service trunk group is to be associated with the Directory Assistance Service. The customer then specifies the Directory Transport options.

- For originating 1+ or 011+ Sent-Paid traffic from a Telephone Company pay telephone, the customer must specify the equal access end offices they want to serve. The customer will determine the number of trunks and the routing, either direct or to the coin tandem, when ordering Exchange Access Operator Service System (EAOSS) trunks. When ordering Modified Operator Services (MOS) trunks, the customer will determine the number of direct trunks from each designated equal access end office to their specified locations. MOS trunks are not provisioned via the access or coin tandems. The customer is responsible for providing all other operator services signaling capabilities, as described in the Pacific Bell Network Interface Document PUB L-780085-NB

(B) The following applies when placing an order for Special Access Services:

- For all Special Access Services, the customer must specify the customer designated premises or hubs involved, the type of service (e.g., Voice Grade, High Capacity, etc.), the channel interface, technical specification package and optional features and functions desired. For multipoint services, the channel interface at each premises may, at the request of the customer, be different but all such interfaces shall be compatible.

- For WATS Access Line Service, the customer must also specify the type of calling (i.e., originating only, terminating only or two way calling) for which the service is to be provided. Additionally, when the wire center which serves the customer premise is not a WATS serving office, the Telephone Company will provide the service to the nearest wire center where the screening function exists. In these circumstances, the customer will be so notified and the order will be changed to designate the appropriate premises. No service order change charge will apply.

5. Ordering Options for Switched and Special Access Service (Cont'd) (N)

5.2 Access Order (Cont'd)

Where the Special Access Service is exempt from the Special Access Surcharge, as set forth in 7.3 following the customer shall furnish with the order the certification as set forth in 7.3.3 following.

(C) The following applies when placing an order for TIPToP Service:

The TIPToP Customer shall specify the number of one-way and two-way port interfaces and the access tandem where the service is desired. The minimum initial order quantity must match the quantity as defined in section 24.1(B)(1)(h). Subsequent orders for port interfaces must use existing facilities when spare capacity is available on those facilities.

When choke trunks are required to a separate choke tandem, the quantity of port interfaces required will be determined by the TIPToP Customer using the table in section 24.1(B)(1)(e).

When ordering the TIPToP one-way and two-way port interfaces the TIPToP customer shall provide a minimum of one Local Routing Number (LRN) per LATA. LRNs associated with other services cannot be used for the TIPToP service.

The TIPToP Customer must provide an Access Carrier Name Abbreviation (ACNA).

The TIPToP Customer must provide the Access Customer Terminal Location (ACTL) and the Common Language Location Identifier (CLLI) for every IP Gateway and every Customer’s IP-VIS Dedicated location used in conjunction with TIPToP service in each LATA where service is ordered.

The TIPToP Customer must identify all NPA-NXXs for which they are the code owner at the time of order. Subsequent acquisitions of NPA-NXXs must be reported to the Telephone Company within thirty (30) days of acquisition. (N)

Certain material previously appeared on this page now appears on 1st Revised Page 5-12.

ACCESS SERVICE

5. Ordering Options for Switched and Special Access Service (Cont'd)

5.2 Access Order (Cont'd)

5.2.1 Access Order Service Date

(A) The Telephone Company will provide the Access Service in accordance with the customer's requested service date, subject to the following conditions: (M)

(1) The Telephone Company shall make available to all customers, upon request, a schedule of applicable service intervals for Switched and Special Access Services. The schedule shall specify the applicable service interval for services and the quantities of services that can be provided by a requested service date. Any associated material will be provided upon request and within a reasonable period of time. (M)

The Telephone Company will not accept orders for service dates which exceed the applicable service date by more than six months.

All part-time Video and Program Audio services are subject to a service inquiry. A service inquiry is a request to the Telephone Company to determine if facilities exist to provide the service ordered and to determine the service date on which service can be provided to the customer.

Access Services will be installed during Telephone Company business days. If a customer requests that installation be done outside of scheduled work hours, and the Telephone Company agrees to this request, the customer will be subject to applicable Additional Labor Charges as set forth in 13.2.6(A) following.

Certain material appearing on this page previously appeared on Original Page 5-11.

(This page filed under Transmittal No. 81)

5. Ordering Options for Switched and Special Access Service (Cont'd)

5.2 Access Order (Cont'd)

5.2.2 Access Order Modifications

The customer may request a modification of its Access Order prior to the service date. The Telephone Company will make every effort to accommodate a requested modification when it is able to do so with the normal work force assigned to complete such an order within normal business hours. If the modification cannot be made with the normal work force during normal business hours, the Telephone Company will notify the customer. If the customer still desires the Access Order modification, the Telephone Company will schedule a new service date. All charges for Access Order modifications will apply on a per occurrence basis.

Any increase in the number of Special Access Service channels or Switched Access Service lines, trunks, or SS7 Signaling Connections will be treated as a new Access Order (for the increased amount only).

If order modifications are necessary to satisfy the transmission performance for a Special Access Service ordered by a customer, these changes will be made without order modification charges being incurred by the customer.

(A) Service Date Change Charge/Dispatch Charge (C)

The customer may request a change of the confirmed due date on a pending Access Order prior to the confirmed due date. A change of the confirmed due date is a change of the scheduled service date by the customer to either an earlier date or a later date which does not exceed 30 calendar days from the original service date. (T)

(This page filed under Transmittal No. 30)

ACCESS SERVICE

5. Ordering Options for Switched and Special Access Service (Cont'd)

5.2 Access Order (Cont'd)

5.2.2 Access Order Modifications (Cont'd)

(A) Service Date Change Charge/Dispatch Charge (Cont'd) (C)

If the Telephone Company determines that the customer's request can be accommodated without delaying the service dates for orders of other customers, the service date will be changed and the Service Date Change Charge applied to the order. (T) (T) (T)

If the service date is changed to an earlier date, and the Telephone Company determines additional labor or extraordinary costs are necessary to meet the earlier service date requested by the customer, the customer will be notified by the Telephone Company that Expedited Order Charges as set forth in (D) following apply. Such charges will apply in addition to the Service Date Change Charge. (T) (T)

If the requested service date exceeds 30 calendar days following the original service date, and the Telephone Company determines that the customer's request can be accommodated, the Telephone Company will cancel the original order and apply the Cancellation Charges as set forth in 5.2.3 following. A new Access Order with the new service date will be issued. The Service Date Change Charge will not apply. (T) (T)

If the service date is changed due to a Design Change as set forth in (C) following, the Service Date Change Charge will apply. (T) (T)

Failure to notify, as noted below, the Telephone Company prior to the original service date to request a different service date will result in the application of a Service Date Change Dispatch Charge for installation, moves and rearrangement of services. If a Telephone Company technician is dispatched to the customer's premises on the scheduled service date and the customer is not ready to accept service or the customer has failed to notify the Telephone Company before 3:00PM (PT) on the business day prior to the scheduled service date that the service date needs to be changed, a Service Date Change Dispatch Charge will apply. (N)

If the customer reschedules the service date, a Service Date Change Charge, as set forth following will also apply. If the customer cancels the service date, cancellation charges will also apply in accordance with terms and conditions for cancellation charges as set forth in 5.2.3 following. Cancellation of the order will not preclude the application of the Service Date Change Charge and/or the Service Date Change Dispatch Charge assessed for prior occurrences on the same order. (N)

(This page filed under Transmittal No. 30)

ACCESS SERVICE

5. Ordering Options for Switched and Special Access Service (Cont'd)

5.2 Access Order (Cont'd)

5.2.2 Access Order Modifications (Cont'd)

(A) Service Date Change Charge/Dispatch Charge (Cont'd)

A Service Date Change Charge will apply, on a per order per occurrence basis, for each service date changed. A Service Date Change Dispatch Charge will apply per occurrence when a technician is dispatched to the customer's premises and the customer is not ready for service. The applicable charge is:

	USOC	Charge
Service Date Change Charge, per order	OMC	$26.50
Service Date Change Dispatch Charge, per occurrence	VT6DN	$200.00

(B) Partial Cancellation Charge

Any decrease in the number of ordered Switched Access Service, Special Access Service (as applicable in Section 5.2.3), SS7 Signaling Connection will be treated as a partial cancellation and the charges as set forth in 5.2.3(B) following will apply. (T) (T)

(C) Design Change Charge

The customer may request a design change to the service ordered. A design change is any change to an Access order which requires engineering review. An engineering review is a review by Telephone Company personnel, of the service ordered and the requested changes to determine what changes in the design, if any, are necessary to meet the changes requested by the customer. Design changes include such things as the addition or deletion of optional features or functions or a change in the type of Transport Termination (Switched Access only), type of channel interface, type of Interface Group or technical specifications.

(This page filed under Transmittal No. 64)

ACCESS SERVICE

5. Ordering Options for Switched and Special Access Service (Cont'd)

5.2 Access Order (Cont'd)

5.2.2 Access order modifications (Cont'd)

(C) Design Change Charge (Cont'd)

Design changes do not include a change of customer designated premises, end office switch, Basic Service Arrangement, Feature Group type, Switched Transport type and capacity or Special Access Service channel type. Changes of this nature will require the issuance of a new order and the cancellation of the original order with appropriate cancellation charges applied.

The Telephone Company will review the requested change, notify the customer whether the change is a design change, if the change can be accommodated and if a new service date is required. If the customer authorizes the Telephone Company to proceed with the design change, a Design Change Charge will apply in addition to the charge for Additional Engineering as set forth in 13.1 following. If a change of service date is required, the Service Date Change Charge as set forth in (A) preceding will also apply. (T) (T)

The Design Change Charge will apply on a per order per occurrence basis, for each order requiring a design change. The applicable charge is:

	USOC	Charge
Design Change Charge, per order	H28	$60.00

(This page filed under Transmittal No. 30)

5. Ordering Options for Switched and Special Access Service (Cont'd)

5.2 Access Order (Cont'd)

5.2.2 Access Order Modifications (Cont'd)

(D) Expedite Charges

(1) DS0 (Digital Data), Fractional DS1, Entrance Facilities (Voice Grade, DS1, DS3) and High Capacity (DS1, DS3) Access Services

If a customer desires that service be provided on a due date earlier than the standard interval, the customer may request that service be provided on an expedited service interval. To qualify for an expedited interval the customer must provide End User premises access, where needed, until 11PM (PT), Monday-Friday.

If, upon reviewing availability of equipment, facilities and scheduled workload, the Telephone Company agrees to provide service on an expedited basis and the customer accepts this proposal, an Expedite Order Charge (in case of DS0, Fractional DS1, Voice Grade/DS1 Entrance Facilities and High Capacity DS1 Access Services) or Expedite Circuit Charge (in case of DS3 Entrance Facilities and High Capacity DS3 Access Services) will apply.

The maximum number of circuits, which may be expedited, is limited to twelve (12) two-point or six (6) multi-point Analog/DS0 circuits at the same location; a limit of nine (9) (C)
DS1 circuits at the same location; a limit of four (4) Fractional DS1 circuits at the same location; and a limit of two (2) DS3 circuit at the same location. When the number of (C)
access circuits exceeds the maximum threshold the interval will be negotiated.

If the Telephone Company determines that service can be provided on an expedited basis, the following charges will apply based upon agreed upon expedited service interval. The Expedited Order Charge (in case of DS0, Fractional DS1, Voice Grade/DS1 Entrance Facilities and High Capacity DS1 Access Services) applies on a per order basis, regardless of the number of circuits. The Expedited Circuit Charge (in case of DS3 Entrance Facilities and High Capacity DS3 Access Services) applies on a per circuit basis.

Material previously appearing on this page now appears on 5th Revised Page 5-17.1.

5. Ordering Options for Switched and Special Access Service (Cont'd)

5.2 Access Order (Cont'd)

5.2.2 Access Order Modifications (Cont'd)

(D) Expedite Charges (Cont'd)

(1) DS0 (Digital Data), Fractional DS1, Entrance Facilities (Voice Grade, DS1, DS3) and High Capacity (DS1, DS3) Access Services (Cont'd)

USOC	Analog/Voice Grade/DS0 Access Services		
	Expedited Service Intervals	**Expedited Order Charge**	
EODXN	9 days	$375.00	(M)
EODXL	8 days	$425.00	
EODXJ	7 days	$475.00	
EODXG	6 days	$525.00	
EODXE	5 days	$575.00	
EODXC	4 days	$625.00	
EODXA	3 days	$675.00	(M)
EODWR	2 days	$1,500.00	(N)
EODWQ	1 day	$2,000.00	
EODWP	0 days	$2,500.00	(N)

USOC	DS1/Fractional DS1 Access Services		
	Expedited Service Intervals	**Expedited Order Charge**	
EODXV	6 days	$525.00	
EODXT	5 days	$575.00	
EODXR	4 days	$625.00	
EODXP	3 days	$675.00	
EODWO	2 days	$1,500.00	(N)
EODWN	1 day	$2,000.00	
EODWM	0 days	$2,500.00	(N)

Material previously appearing on this page now appears on Original Page 5-17.1.1.
Material appearing on this page previously appeared on 6th Revised Page 5-17.

(This page filed under Transmittal No. 91)

5. Ordering Options for Switched and Special Access Service (Cont'd)

5.2 Access Order (Cont'd)

5.2.2 Access Order Modifications (Cont'd)

(D) Expedite Charges (Cont'd)

(1) DS0 (Digital Data), Fractional DS1, Entrance Facilities (Voice Grade, DS1, DS3) and High Capacity (DS1, DS3) Access Services (Cont'd)

USOC	High Capacity DS3 Access Services	
	Expedited Service Intervals	**Expedited Circuit Charge**
EODWL	6 days	$1,500.00
EODWK	5 days	$2,000.00
EODWJ	4 days	$2,500.00
EODWH	3 days	$3,000.00
EODWG	2 days	$3,500.00
EODWF	1 day	$4,000.00
EODWE	0 days	$4,500.00

(D)

(D)

(a) In addition to Expedited Order Charges or Expedite Circuit Charges, special construction charges may apply, if the Telephone Company determines that additional cost will be incurred.

(b) When the request for expediting occurs subsequent to the issuance of the Access Order, a Service Date Change Charge as specified in (A), preceding, also applies.

(c) If the Telephone Company is subsequently unable to meet an agreed upon expedited service date, no Expedite Order Charge or Expedite Circuit Charge will apply, unless the missed service date was caused by the customer.

(d) The Telephone Company will adhere to the expedite intervals as specified above, except during circumstances beyond its direct control (i.e., acts of God, governmental requirements, work stoppages and civil commotions).

(This page filed under Transmittal No. 99)

5. Ordering Options for Switched and Special Access Service (Cont'd)

5.2 Access Order (Cont'd)

5.2.2 Access Order Modifications (Cont'd)

(D) Expedite Charges (Cont'd)

(2) For all Access Services, excluding DS0 (Digital Data), Fractional DS1, Entrance Facilities (Voice Grade, DS1, DS3) and High Capacity (DS1, DS3) Access Services (Cont'd) (C)

If the customer desires that service be provided on an earlier date than that which has been established for the access order or the provision of the Access Service, the customer may request that service be provided on an expedited basis.

If the Telephone Company determines that service can be provided on the requested date and that additional labor costs or extraordinary costs are required to meet the requested service date, the customer will be notified and will be provided with an estimate of the additional charges involved. The total charge to the customer for the Additional Engineering may not exceed the estimated amount by more than 10%. If the customer instructs the Telephone Company to proceed, such additional charges will be determined and billed to the customer as follows:

To calculate the additional labor charges, the Telephone Company will, upon authorization from the customer to incur the additional labor charges, keep track of the additional labor hours used to meet the request of the customer and will bill the customer at the applicable additional labor charges as set forth in 13.2.6(A) following.

(a) Extraordinary Costs: The special construction terms and conditions specified in Pacific Bell's Tariff F.C.C. No. 2 will be used by the Telephone Company to determine charges to recover the extraordinary costs which may be involved. Authorization to incur the costs and to bill the customer will be in accordance with the terms and conditions of Pacific Bell's Tariff F.C.C. NO. 2.

(b) When the request for expediting occurs subsequent to the issuance of the Access Order, a Service Date Change Charge as set forth in (A) preceding also applies.

(c) If the Telephone Company is subsequently unable to meet an agreed upon expedited service date, no Expedite Order Charge or Expedite Circuit Charge will apply, unless the missed service date was caused by the customer.

(d) The Telephone Company will adhere to customer requested expedites approved by the Telephone Company, except during circumstances beyond its direct control (i.e., acts of God, governmental requirements, work stoppages and civil commotions).

(This page filed under Transmittal No. 70)

ACCESS SERVICE

5. Ordering Options for Switched and Special Access Service (Cont'd)

5.2 Access Order (Cont'd)

5.2.3 Cancellation of an Access Order (excluding the following Special Access Services: Gigabit Ethernet Metropolitan Area Network (GigaMAN), Multi-service Optical Network (MON) Ring Service, Optical Carrier Network (OCN) Point-to-Point Service) (C) (C)

(A) A customer may cancel an Access Order for the installation of service on any date prior to the service date. The cancellation date is the date the Telephone Company receives written or verbal notice from the customer that the order is to be cancelled. The verbal notice must be followed by written confirmation within 10 days. If a customer or a customer's end user is unable to accept Access Service within 30 calendar days after the original service date, the customer has the choice of the following options:

- The Access Order shall be cancelled and charges set forth in (B) following will apply, or

- Billing for the service will commence.

In such instances, the cancellation date or the billing date, depending on which option is selected by the customer, shall be the 31st day beyond the original service date of the Access Order.

(B) When a customer cancels an Access Order for the installation of service, a Cancellation Charge will apply as follows:

(1) Installation of Switched or Special Access Service facilities is considered to have started when the Telephone Company incurs any cost in connection therewith or in preparation thereof which would not otherwise have been incurred.

(2) Where the customer cancels an Access order prior to the start of installation of access facilities, no charges shall apply. (M)

(3) Where installation of access facilities has been started prior to the cancellation, the lesser of the charges specified in (a) or (b) following, shall apply except for Switched Access service. For Switched Access, (b) following will always apply. (M) (D) (D)

Certain material appearing on this page previously appeared on 2nd Revised Page 5-19.

(This page filed under Transmittal No. 64)

5. Ordering Options for Switched and Special Access Service (Cont'd)

5.2 Access Order (Cont'd)

5.2.3 Cancellation of an Access Order (excluding the following Special Access Services: Gigabit Ethernet Metropolitan Area Network (GigaMAN), Multi-service Optical Network (MON) Ring Service, Optical Carrier Network (OCN) Point-to-Point Service) (Cont'd) (C) (C)

(B) (Cont'd)

(3) (Cont'd)

(a) The charge for the minimum period of Switched or Special Access service (as applicable in this section) ordered by the customer. (Recurring and Nonrecurring charges) (T)

(b) The Cancellation Charge equals:
- the number of business days from the access order application date through the access order cancellation date (i.e., the service interval)
- multiplied by the average daily charge
- plus the access order charge.

Notes:

(i) The service interval is the number of business days from the access order application date through the access order cancellation date with the application date being day one. Service installation costs incurred by the Telephone Company start on the application date

(ii) If the customer has requested a service date change beyond the original service date, the number of business days beyond the original service date are included in the service interval

(iii) Average daily charge equals installation charges plus rearrangement charges divided by the number of business days in the service interval.

(c) A separate charge will be assessed for Switched Transport (i.e., EF, DTT, TST) and Switched Access lines or trunks. (M)

(C) When a customer cancels an order for the discontinuance of service, no charges apply for the cancellation. (M)

Certain material previously appearing on this page now appears on 3rd Revised Page 5-18.
Certain material appearing on this page previously appeared on 5th Revised Page 5-20.

(This page filed under Transmittal No. 64)

5. Ordering Options for Switched and Special Access Service (Cont'd) (N)

5.2 Access Order (Cont'd) (N)

5.2.3 Cancellation of an Access Order (excluding the following Special Access Services: Gigabit Ethernet Metropolitan Area Network (GigaMAN), Multi-service Optical Network (MON) Ring Service, Optical Carrier Network (OCN) Point-to-Point Service) (Cont'd) (C) (C)

(D) If the Telephone Company misses a service date by more than 30 days due to circumstances over which it has direct control (excluding, e.g., acts of God, governmental requirements, work stoppages and civil commotions), the customer may cancel the Access Order without incurring cancellation charges. (M) (M)

5.2.3.1 Cancellation of an Access Order (for the following Special Access Services: Gigabit Ethernet Metropolitan Area Network (GigaMAN), Multi-service Optical Network (MON) Ring Service, Optical Carrier Network (OCN) Point-to-Point Service) (N)

Cancellation charges are applied based upon the type of special access service being cancelled which is categorized as either, 1) "point to point" service or 2) "non-point to point" service. However, at no time will cancellation charges apply until costs for installation of facilities have been incurred by the Telephone Company. Service installation costs incurred by the Telephone Company start on the application date, when the Telephone Company confirms the order with the customer.

Cancellation charges for "point to point" services are based upon the date that a customer cancels an Access Order with respect to the Design Layout Report Date (DLRD), of the service being provisioned, as described in Section 5.2.3.1(B)(2) following. The DLRD is the date the Design Layout Report is forwarded to the customer. The DLRD is provided to the customer upon firm order confirmation.

The table below defines the product categories for "point to point" services pertaining to this section:

"Point to Point" Services	
Service	**Product Category/Type**
OC-3 Optical Carrier Network-Point to Point Service	OC-3
OC-12 Optical Carrier Network-Point to Point Service	OC-12
OC-48 Optical Carrier Network-Point to Point Service	OC-48
OC-192 Optical Carrier Network-Point to Point Service	OC-192
GigaMAN	1Gig-E

(N)

Certain material appearing on this page previously appeared on 5th Revised Page 5-20.

(This page filed under Transmittal No. 64)

(N)

5. Ordering Options for Switched and Special Access Service (Cont'd)

5.2 Access Order (Cont'd)

5.2.3.1 Cancellation of an Access Order (for the following Special Access Services: Gigabit Ethernet Metropolitan Area Network (GigaMAN), Multi-service Optical Network (MON) Ring Service, Optical Carrier Network (OCN) Point-to-Point Service) (Cont'd)

Cancellation charges for "non-point to point" services are applied based on actual costs incurred by the Telephone Company as described in Section 5.2.3.1(A)(2) and 5.2.3.1(B)(3)(b) following. The table below lists the "non-point to point" services pertaining to this section:

"Non-Point to Point" Services
Multi-service Optical Network Ring Service

(A) Cancellation of a letter of agreement

(1) When facilities must be constructed prior to the Telephone Company receipt of an Access Order (e.g., construction of Multi-service Optical Network Ring where facility assignment is not yet available, due to lack of spare capacity), excluding special construction as described in Tariff F.C.C. No. 2, the customer will be required to submit a written letter of agreement to the Telephone Company which includes a maximum estimate as previously provided by the Telephone Company of the cancellation charges as defined at 5.2.3.1(A)(2). A customer may cancel a written letter of agreement. The cancellation date is the date the Telephone Company receives written or verbal notice from the customer that the letter of agreement is to be cancelled. If verbal notice is given, it must be followed by written confirmation within 10 days or it shall be deemed to be void.

If a customer does not place an Access Order for the services within 30 days of receiving notification that the network is ready for the services ordered, the letter of agreement will be deemed cancelled.

(2) When a customer cancels a letter of agreement, cancellation charges will apply as follows:

(a) Installation of facilities is considered to have started when the Telephone Company incurs any cost in connection therewith or on preparation thereof which would not otherwise have been incurred.

(N)

(This page filed under Transmittal No. 64)

(N)

5. Ordering Options for Switched and Special Access Service (Cont'd)

5.2 Access Order (Cont'd)

5.2.3.1 Cancellation of an Access Order (for the following Special Access Services: Gigabit Ethernet Metropolitan Area Network (GigaMAN), Multi-service Optical Network (MON) Ring Service, Optical Carrier Network (OCN) Point-to-Point Service) (Cont'd)

(A) Cancellation of a letter of agreement (Cont'd)

(2) (Cont'd)

(b) Where an Access Order has been issued, cancellation charges shall apply as indicated in Section 5.2.3.1(B) following.

(c) Applicable letter of agreement cancellation charges will be calculated from the costs incurred by the Telephone Company at the time the letter of agreement is cancelled. The cancellation charge equals:

(i) Non-recoverable cost of equipment and material ordered, provided or used, and
(ii) Non-recoverable cost of installation and removal including the cost of engineering, labor, supervision, transportation, rights-of-way and other associated costs.
(iii) Less previously collected special construction charges, if applicable.

(B) Cancellation of Access Order

(1) A customer may cancel an Access Order for installation of service. The Access Order must be cancelled at least one (1) day before the service date.

The cancellation date is the date the Telephone Company receives written or verbal notice from the customer that the order is to be cancelled. If verbal notice is given, it must be followed by written confirmation within 10 days or it shall be deemed to be void.

(N)

(N)

5. Ordering Options for Switched and Special Access Service (Cont'd)

5.2 Access Order (Cont'd)

5.2.3.1 Cancellation of an Access Order (for the following Special Access Services: Gigabit Ethernet Metropolitan Area Network (GigaMAN), Multi-service Optical Network (MON) Ring Service, Optical Carrier Network (OCN) Point-to-Point Service) (Cont'd)

(B) Cancellation of Access Order (Cont'd)

(1) (Cont'd)

If a customer or customer's end user is unable to accept Access Service and the new service date requested is beyond 30 calendar days of the original service date, the customer has the choice of the following options:

(a) The Access Order shall be cancelled and charges specified in 5.2.3.1(B)(2) following will apply, or

(b) Service shall be accepted, and billing for the service will commence.

In such instances, the cancellation date or the billing date, depending on which option is selected by the customer, shall be the 31st day beyond the original service date of the Access Order. If the customer does not select one of the options, the Telephone Company will begin billing for the service on the 31st day beyond the original service date of the Access Order.

(2) When Cancellation Charges Apply

When a customer cancels an Access Order (or a part of an order) after it has been issued, but before notification by the Telephone Company that the service is available for use, cancellation charges will apply, even when nonrecurring installation charges would be waived, as follows:

(a) When a "point to point" special access service is cancelled on or before the Design Layout Report Date (DLRD), a cancellation charge will apply on a per circuit basis as shown in Table A in Section 5.2.3.1(B)(3)(a).

(N)

(N)

5. Ordering Options for Switched and Special Access Service (Cont'd)

5.2 Access Order (Cont'd)

5.2.3.1 Cancellation of an Access Order (for the following Special Access Services: Gigabit Ethernet Metropolitan Area Network (GigaMAN), Multi-service Optical Network (MON) Ring Service, Optical Carrier Network (OCN) Point-to-Point Service) (Cont'd)

(B) Cancellation of Access Order (Cont'd)

(2) When Cancellation Charges Apply (Cont'd)

(b) When a lower-speed "point to point" service (e.g., OC-3c OCN Point-to-Point Service) with a Connecting Facility Assignment (CFA) of a higher-speed "point to point" or "non-point to point" service (e.g., OC-12 OCN Point-to-Point Service) is cancelled, and a cancelled service has no channel termination or local distribution channel, a cancellation charge will apply on a per circuit basis as shown in Table A in Section 5.2.3.1(B)(3)(a).

(c) When a "point to point" service is cancelled after the Design Layout Report Date (DLRD), a cancellation charge will apply on a per circuit basis as shown in Table B in Section 5.2.3.1(B)(3)(a).

(3) Cancellation Charges

(a) Point-to-point Services:

TABLE A
Cancellation Charge

Product Category/Type	Cancellation Charge (Per Circuit)
OC-3	$600.00
OC-12	$800.00
OC-48	$1,200.00
OC-192	$2,500.00
1Gig-E	$800.00

(N)

(This page filed under Transmittal No. 64)

(N)

5. Ordering Options for Switched and Special Access Service (Cont'd)

5.2 Access Order (Cont'd)

5.2.3.1 Cancellation of an Access Order (for the following Special Access Services: Gigabit Ethernet Metropolitan Area Network (GigaMAN), Multi-service Optical Network (MON) Ring Service, Optical Carrier Network (OCN) Point-to-Point Service) (Cont'd)

(B) Cancellation of Access Order (Cont'd)

(3) Cancellation Charges (Cont'd)

(a) Point-to-point Services: (Cont'd)

TABLE B
Cancellation Charge

Product Category/Type	Cancellation Charge (Per Circuit)
OC-3	$2,900.00
OC-12	$3,100.00
OC-48	$3,700.00
OC-192	$4,000.00
GigaMAN	$3,200.00

(b) Non-point-to-point services:

Applicable charges will be calculated from the costs incurred by the Telephone Company at the time the Access Order is cancelled. The Cancellation Charge equals:

(i) Non-recoverable cost of equipment and material ordered, provided or used, and

(ii) Non-recoverable cost of installation and removal including the cost of engineering, labor, supervision, transportation, rights-of-way and other associated costs.

(N)

(N)

5. Ordering Options for Switched and Special Access Service (Cont'd)

5.2 Access Order (Cont'd)

5.2.3.1 Cancellation of an Access Order (for the following Special Access Services: Gigabit Ethernet Metropolitan Area Network (GigaMAN), Multi-service Optical Network (MON) Ring Service, Optical Carrier Network (OCN) Point-to-Point Service) (Cont'd)

(B) Cancellation of Access Order (Cont'd)

(4) When Cancellation Charges Do Not Apply

(a) When a customer cancels an order for the termination of existing service.

(b) If the Telephone Company misses a service date by more than 30 days, the customer may cancel the Access Order without incurring cancellation charges.

(c) Where the customer cancels a letter of agreement prior to the start of installation of access facilities.

(d) Network reconfiguration order.

(N)

ACCESS SERVICE

5. Ordering Options for Switched and Special Access Service (Cont'd)

5.2 Access Order (Cont'd)

5.2.4 Selection Of Facilities For Access Orders

(A) When there are High Capacity facilities to a hub on order or in service for the customer's use, the customer must request a specific channel or transmission path be used to provide the Switched or Special Access Service requested in an Access Order. The Telephone Company will make a reasonable effort to accommodate the customer request.

(B) For all other Access Orders, the option to request a specific transmission path or channel is not provided except as provided for under Special Facilities Routing as set forth in 11. following.

5.2.5 Minimum Period

(A) Except as set forth in (B) and 9.4(A) following, the minimum period for which Access Service is provided and for which charges are applicable, is one month.

(B) The minimum period for part-time Video and Program Audio Special Access Services is one day even though the service will be provided only for the duration of the event specified on the order (e.g., one-half hour, two hours, five hours, etc.).

Material previously appearing on this page now appears on 3rd Revised Page 5-19 and 2nd Revised Page 5-19.1.

(This page filed under Transmittal No. 64)

5. Ordering Options for Switched and Special Access Service (Cont'd)

5.2 Access order (Cont'd)

5.2.5 Minimum Period (Cont'd)

(C) Service Rearrangements as set forth in 6.7.1 and 7.2.2 following for Switched and Special Access Services respectively, may be made without a change in minimum period requirements.

(D) Changes other than those identified in 6.7.1, 6.7.4 and 7.2.2 following will be treated as a discontinuance of the existing service and an installation of a new service. All associated nonrecurring charges will apply for the new service. A new minimum period will be established for the new service. The customer will also remain responsible for all outstanding minimum period obligations associated with the disconnected service.

The changes listed below are those which will be treated as a discontinuance and installation of service for which a new minimum period will be established.

(1) A move to a different building as set forth in 6.7.5 and 7.2.3 following.

(2) A change in type of service (i.e., Switched Access to Special Access, one type of Special Access to another, or one type of Switched Access Service to another, except as set forth in 6.7.4 following)

(3) A change in the type of Special Access Service Channel Termination.

(4) A change in Switched Access Service or Directory Assistance Service Interface Group as set forth in 15.1 following.

(5) Change in Switched Access Service traffic type as set forth in 6.1.1(E)(1) following.

(6) Change in Switched Access Service capacity (i.e., DS1 to DS3).

(7) Change from two-point to multipoint Special Access Service or from multipoint to two-point Special Access Service.

(This page filed under Transmittal No. 1)

5. Ordering Options for Switched and Special Access Service (Cont'd)

5.2 Access Order (Cont'd)

5.2.6 Minimum Period Charges

When Access Service is disconnected prior to the expiration of the minimum period, charges are applicable for the balance of the minimum period. A disconnect constitutes facilities being returned to available inventory.

The Minimum Period Charge for monthly billed services will be determined as follows:

(A) For Switched Access Service, the charge for a month or fraction thereof is equal to the applicable recurring plus any nonrecurring charges as set forth in 6.7.3 following and/or special construction charges(s) that may be due.

(B) For Special Access Service, the charge for a month or fraction thereof is the applicable monthly rates for the appropriate channel type plus any optional features, nonrecurring charges, as set forth in 7.5 through 7.11 following and/or special construction charge(s) that may be due.

The Minimum Period Charge for part-time Video and Program Audio Services is the applicable daily rate for the appropriate channel type as set forth in 7.8 and 7.9 following.

5.2.7 Shared Use Facilities

Shared Use (i.e., Switched and Special Access Services provided over the same analog or digital high capacity facilities) is allowed. Shared use facilities to a Hub will be ordered and provided as Special Access Service only. While shared use is allowed, individual services utilizing these facilities must be ordered either as Switched Access Service or Special Access Service depending on the intended use. When placing the order for individual service(s), the customer must specify a channel assignment for each service ordered. Rate Regulations for Shared Use facilities are set forth in 6.7.12 and 7.2.7 following.

5. Ordering Options for Switched and Special Access Service (Cont'd)

5.2 Access Order (Cont'd)

5.2.8 Available Inventory

Available inventory is limited and does not include facilities previously ordered. The Telephone Company will make every reasonable effort to maintain sufficient available inventory to provide Access Service in accordance with customers' requested service date intervals. To the extent that service can be provided, Access Orders will be satisfied from available inventory.

5. Ordering Options for Switched and Special Access Service (Cont'd)

5.2 Access Order (Cont'd)

5.2.9 Access Orders For Services Provided By More Than One Exchange Telephone Company

(A) Access Services provided by more than one Telephone Company are services where one end of the Switched Transport, Directory Transport or Channel Mileage element is in the operating territory of one Telephone Company and the other end of the element is in the operating territory of a different Telephone Company.

The ordering procedure for this service is dependent upon the billing arrangement, as set forth in 2.4.8 preceding, to be used by the Telephone Companies involved in providing the Access Service. The ordering and design arrangements will be consistent with the provisions contained in this section and the ordering and Billing Forum standards, Multiple Exchange Carrier Access Billing (MECAB) and Multiple Exchange Carrier Ordering and Design (MECOD). The Telephone Company will notify the customer which of the ordering procedures will apply.

(1) Non Meet Point Billing

(a) Single Company Billing ordering

The company where the first point of switching is located shall accept the order for ALA, ATA950, FGA and FGB service. The other company involved shall also receive a copy of the order from the customer.

The Telephone Company receiving the order from the customer will arrange to provide the service and bill the customer as set forth in 2.4.8(A)(1)(a). The customer will place the order with the Telephone Company as follows:

5. Ordering Options for Switched and Special Access Service (Cont'd)

5.2 Access Order (Cont'd)

5.2.9 Access Orders For Services Provided By More Than One Exchange Telephone Company (Cont'd)

(A) (Cont'd)

(1) Non Meet Point Billing (Cont'd)

(a) Single Company Billing Ordering (Cont'd)

(i) For Switched Access Services the customer will place the order with the Telephone Company in whose territory the first point of switching is located. The first point of switching is:

- ALA or FGA - dial tone office

When the first point of switching is not in the same Telephone Company's territory as the Interexchange Carrier premises, the customer must supply a copy of the order to the Telephone Company in whose territory the Interexchange Carrier premises is located.

5. Ordering Options for Switched and Special Access Service (Cont'd)

5.2 Access Order (Cont'd)

5.2.9 Access Orders For Service Provided By More Than One Exchange Telephone Company (Cont'd)

(A) (Cont'd)

(2) Meet Point Billing Ordering

Each Telephone Company will provide its portion of the Access Service within its operating territory to an interconnection point(s) (IP) with the other Telephone Company(s). The interconnection point(s) Billing Percentages will be determined by the Telephone Companies involved in providing the Access Service and listed in NATIONAL EXCHANGE CARRIER ASSOCIATION, INC. TARIFF F.C.C. NO. 4. Each Telephone Company will bill the customer for its portion of the service as set forth in 2.4.8(A)(2). All other appropriate charges in each Telephone Company tariff are applicable.

(a) For FGA and FGB or ALA and ATA950 Switched Access Services, the customer must place an order with the Telephone Company in whose territory the first point of switching is located, (i.e., FGA or ALA - dial tone office, FGB or ATA950 - access tandem or end office).

(b) For FGC and FGD or ATANEA and ATAXXX Switched Access Services, the customer must place an order with the Telephone Company in whose territory the end office is located. Customers may, at their option, order FGD to the access

5. Ordering Options for Switched and Special Access Service (Cont'd)

5.2 Access Order (Cont'd)

5.2.9 Access Orders For Services Provided By More Than One Exchange Telephone Company (Cont'd)

(A) (Cont'd)

(2) Meet Point Billing Ordering

(b) (Cont'd)

tandem. When ordered to the access tandem, and the access tandem and the end office are not in the same Telephone Company operating territory, the customer must also supply a copy of the order to each additional Telephone Company subtending the access tandem.

(c) Customers ordering Special Access Service to be interconnected with Switched Access Services at Telephone Company designated WATS Serving Offices for the provision of WATS or WATS-type Services must place an order with each Telephone Company in whose territory the end office and the WATS Serving Office are located, if they are not collocated.

(d) Except for Special Access Service as set forth in (c) above or as set forth in (e) below, the customer may place the order for a Special Access Service with either Exchange Telephone Company.

(e) For Special Access Service involving a hub(s) the customer must place the order with the Telephone Company in whose territory the hub(s) is located.

5. Ordering Options for Switched and Special Access Service (Cont'd)

5.2 Access Order (Cont'd)

5.2.9 Access Orders For Services Provided By More Than One Exchange Telephone Company (Cont'd)

(A) (Cont'd)

(2) Meet Point Billing Ordering (Cont'd)

(f) For Directory Assistance Service, the customer must place an order with the Telephone Company in whose territory the Directory Assistance Location is located.

For the service(s) ordered as set forth preceding, the customer must also supply a copy of the order to the Telephone Company in whose operating territory a customer designated premises is located and any other Telephone Company(s) involved in providing the service.

ACCESS SERVICE

(This page filed under Transmittal No. 1)

(This page filed under Transmittal No. 1)

ACCESS SERVICE

6. Switched Access Service

6.1 General

Switched Access Service is available to customers for their use in furnishing their services to End Users. Switched Access Services may not be used as substitutes for the Telephone Company's Local and/or general exchange services. Switched Access Service provides for the ability to originate calls from an End User's premises to a customer designated premises, and to terminate calls from a customer designated premises to an End User's premises in the LATA where it is provided. Specific references to material describing the elements of Switched Access Service are provided in 6.1.2 and 6.2 following.

Rates and charges for Switched Access Service are set forth in 6.8 following. Rates and charges for Switched Access/Dedicated Transport are set forth in Section 6.8 following, with the exception of the services provided by the Telephone Company in the Metropolitan Statistical Areas (MSAs) in which the Telephone Company has received Phase II pricing flexibility pursuant to Subpart H of Part 69 of the Commission's Rules. The rates and charges for the Switched Access/Dedicated Transport services in the MSAs that have received Phase II pricing flexibility are set forth in Section 22. (N) (N)

The application of rates for Switched Access Service is described in 6.7 following. Rates and charges for services other than Switched Access Service, e.g., a customer's interLATA toll message service, may also be applicable when Switched Access Service is used in conjunction with these other services. Descriptions of such applicability are provided in 6.2 following. Finally, a message Unit credit is applied against line side

Switched Access Service charges as described in 6.7.9 following.

Pursuant to the FCC Dockets "In the Matter of Admendments of Part 69 of the Commission's Rules Relating to the Creation of Access Charge Subelements for Open Network Architecture (CC Docket No. 89-79) and Policy and Rules Concerning Rates for Dominant Carriers (CC Docket No. 87-313)", Report and Order and Order on Further Reconsideration and Supplemental Notice of Proposed Rulemaking, FCC 91-186, released July 11, 1991, the Telephone Company offers an Access Line Arrangement (ALA) and an Access Trunk Arrangement (ATA) and a number of Basic Service Elements (BSEs).

The existing Feature Group Arrangements will be offered as options during a transition period that starts when the new ALA and ATA are in effect. The transition period will expire at the time the ALA and ATA are included under Price Cap regulation, July 1, 1993. The Feature Group arrangements will be abolished at the end of the transition period.

In Memorandum Opinion and Order on Reconsideration released April 14, 1993, which modifies the Part 69/ONA Order, and requires that Bell Operating Companies maintain their existing Feature Groups side by side with unbundled ONA services through at least June 30, 1994.

(This page filed under Transmittal No. 43)

6. Switched Access Service (Cont'd)

6.1 General (Cont'd)

6.1.1 Switched Access Service Arrangements and Manner of Provision

(A) Switched Transport Service Arrangements

Switched Access Service is provided in an unbundled Basic Service Arrangements (BSA) offering one line side connection called (1) Access Line Arrangement (ALA) and one trunk side connection called (2) Access Trunk Arrangement (ATA). These arrangements are offered with technical choices and optional Basic Service Elements (BSEs). Switched Access Service is also provided in four optional service arrangements of standard and optional features called (1) Feature Group A (FGA), (2) Feature Group B (FGB), (3) Feature Group C (FGC) and (4) Feature Group D (FGD). In addition 800 Access Service and 900 Access Service are available through the use of the ATA and the trunkside Feature Groups. 500 Access Service is available through the use of ATAXXX and Feature Group D.

These arrangements are differentiated by their technical characteristics, e.g., line side vs. trunk side connection at the Telephone Company Switch, and the manner in which an end user accesses them in originating calling, e.g., with or without an access code. A description of each ALA and ATA is in 6.2.1 following. A description of each Feature Group is in 6.2 following. A description of 500, 800 Access Service and 900 Access Service is in 6.2 following. Ordering conditions in the provision of Switched Access Service are set forth in 5. preceding.

Switched Transport Service Arrangements permits a one-way or two-way voice frequency transmission path for transport of calls in the originating direction and in the terminating direction -- though not simultaneously.

6. Switched Access Service (Cont'd)

6.1 General (Cont'd)

6.1.1 Switched Access Service Arrangements and Manner of Provision

(A) Switched Transport Service Arrangements (Cont'd)

Switched Transport is comprised of various facilities, interfaces and features. The Switched Transport rate category is composed of three rate elements; Entrance Facilities, Direct-Trunked Transport or Tandem Switched Transport. In addition, an Interconnection Charge applies.

The Tandem-Switched element applies in addition when Tandem-Switched transport is provided. Dedicated Signalling Transport is available as an option of both Direct Trunked Transport and Tandem Switched Transport. A multiplexing charge may also apply when facilities of one capacity are connected to facilities of another capacity.

Switched Transport elements can be ordered in combination of:

(a) Entrance Facilities only.
(b) Entrance Facilities and Direct Trunked Transport (directly routed to an end office).
(c) Entrance Facilities and Direct Trunked Transport(routed through an Access Tandem Switch).
(d) Direct Trunked Transport only.
(e) Tandem Switched Transport and Direct Trunked Transport.
(f) Expanded Interconnection Service Channel Termination

Multiplexing charges will apply when a higher capacity Entrance Facilities or EISCT is interconnected with a lower capacity Direct-Trunked Transport, when a higher capacity Direct-Trunked Transport is interconnected with a lower capacity Direct-Trunked Transport at a hub location, when other than a Direct-Trunked Transport DS1 transport channel is interconnected to a digital end office switch, and when other than a Direct-Trunked Voice Grade transport channel is interconnected to an analog end office switch.

(This page filed under Transmittal No. 1)

6. Switched Access Service (Cont'd)

6.1 General (Cont'd)

6.1.1 Switched Access Service Arrangements and Manner of Provision(Cont'd)

(A) Switched Transport Service Arrangements (Cont'd)

When the customer orders Direct-Trunked Transport and requests such transport to be interconnected with Entrance Facilities or an EISCT of another customer, the interconnection will be provided if the customer requesting the interconnection provides a letter authorizing such interconnect and use of the Entrance Facility from the other customer. For such an arrangement, the charges for the Direct-Trunked Transport and any associated Tandem Switch and/or Multiplexing charge will be billed to the ordering customer.

No billing of Entrance Facility charges will be made to the customer ordering Direct-Trunked Transport. No adjustment of the Entrance Facility charges will be made to the customer providing the Entrance Facilities. The customer permitting another customer to use its Entrance Facilities bears the responsibility to obtain payment for the use of its Entrance Facilities from another customer.

Rates and charges for these elements and the optional features available are set forth in 6.8 following.

Switched Transport is ordered under the Access Order provisions set forth in Section 5 (Ordering Options for Switched and Special Access Service). Ordering provisions as set forth in 2.4.8 (Billing of Access Service Provided by More Than One Telephone Company) will apply when more than one Exchange Telephone Company is involved in the provision of a Switched Transport facility. Following are descriptions of the available facilities, interfaces and features.

6. Switched Access Service (Cont'd)

6.1 General (Cont'd)

6.1.1 Switched Access Service Arrangements and Manner of Provision (Cont'd)

(B) Transport Channels and Multiplexing

Switched Transport is comprised of specific channel types. These connections may be either analog or digital. Analog connections are differentiated by spectrum and bandwidth; digital connections are differentiated by bit rate. Depending upon the spectrum, bandwidth or bit rate selected by the customer, multiplexing, as described in (C) following, may also be required to allow interconnection with other transport channels or to a Telephone Company switch.

For Entrance Facilities and Direct Trunked transport, the transport channel shall be specified by the customer. The customer shall specify an interface group at its premises. Interface groups are set forth in 15.1 following.

6. Switched Access Service (Cont'd)

6.1 General (Cont'd)

6.1.1 Switched Access Service Arrangements and Manner of Provision (Cont'd)

(B) Transport Channels and Multiplexing (Cont'd)

Multiplexing is a chargeable optional feature of Switched transport. The customer has the option of ordering digital facilities at a DS3 level (i.e., 44.736 Mbps) to a Telephone Company Hub for multiplexing to 28 channels at a DS1 level (1.544 Mbps) or at a DS1 level for multiplexing to 24 channels at a DS0 level (64Kbps).

Use of Multiplexing allows customers to interconnect Entrance Facilities or EISCT of one capacity or bandwidth to Direct Trunked Facilities or Tandem Trunked Facilities of a different capacity or bandwidth. Multiplexing also allows for the interconnection of Direct Trunked Facilities or Tandem Trunked Facilities with end offices or access tandems requiring capacity or bandwidth different from that of the interconnecting facility.

Two multiplexing options, DS1 to Voice Grade Multiplexing and DS3 to DS1 Multiplexing will be provided as described in 6.7.1 following.

When ordering, the customer will specify the desired multiplexing hub(s) selected from the National Exchange Carrier Association, Inc. Tariff No. 4.

Shared Use as set forth in Section 7.2.7 following does not apply to Switched transport.

Multiplexing can be applied to a Switched Access Entrance Facility or Direct Trunked transport.

(This page filed under Transmittal No. 1)

6. Switched Access Service (Cont'd)

6.1 General (Cont'd)

6.1.1 Switched Access Service Arrangements and Manner of Provision (Cont'd)

(C) Manner of Provision

Switched Access is furnished in either quantities of lines or trunks. ALA or FGA Access and ATA950 or FGB Access are furnished on a per-line or per-trunk basis respectively. ATANEA or FGC Access and ATAXXX or FGD Access are furnished on a per trunk basis. Entrance Facilities are furnished in either capacities of DS0, DS1 or DS3. DNAL is furnished in quantities of channels.

Trunks and lines are differentiated by type and directionality of traffic.

(1) Traffic Types

There are five major traffic types identified as: Originating, Terminating, Directory Assistance, Originating Data, and Terminating Data. Originating traffic type represents access capacity within a LATA for carrying traffic from the end user to the customer; Terminating traffic type represents access capacity within a LATA for carrying traffic from the customer to the end user; Directory Assistance traffic type represents access capacity within a LATA for carrying Directory Assistance traffic from the customer to a Directory Assistance location. Originating Data and Terminating Data traffic type represents access capability within a LATA for carrying digital traffic at speeds of 56 kbps to 64 kbps between the customer and the customer's end user.

6. Switched Access Service (Cont'd)

6.1 General (Cont'd)

6.1.1 Switched Access Service Arrangements and Manner of Provision (Cont'd)

(C) Manner of Provision (Cont'd)

(1) Traffic Types (Cont'd)

When ordering capacity for Switched Access the customer must at a minimum specify such access capacity in terms of Originating traffic types and/or Terminating traffic types or 56 kpbs or 64CCC traffic types. 56 kpbs and 64 kbps are available only on ATAXXXX or FGD. Directory Assistance traffic type is used for ordering Directory Assistance Access Service as set forth in 9. following.

Because some customers will wish to further segregate their originating traffic into separate trunks groups, or because segregation my be required by network considerations, Originating traffic is further categorized into Domestic, 500, 800, 900, Operator and IDDD. Domestic traffic represents access capacity for carrying only domestic traffic other than 500, 800, 900 and Operator traffic; IDDD traffic represent access capacity for carrying only international traffic; and, 500, 800, 900 and Operator traffic represents access capacity for carrying, respectively, only 500, 800, 900 or Operator traffic. When ordering such types of access capacity, the customer must specify Domestic, 500, 800, 900, Operator or IDDD traffic types

For Feature Group D or Access Trunk Arrangement 101XXXX Switched Access Service with the CCSAC optional feature, i.e., out of band signaling, as described in 6.1.2 (A)(2)(d), an SS7 Signaling Connection is required between the Telephone Company STP and the customer's SPOT. When ordering the CCSAC optional feature, the customer shall specify that all traffic be equipped with out of band signaling. At the same time, 64CCC may be specified.

6. Switched Access Service (Cont'd)

6.1 General (Cont'd)

6.1.1 Switched Access Service Arrangements and Manner of Provision (Cont'd)

(C) Manner of Provision (Cont'd)

(2) Design and Traffic Routing of Switched Access Service

For Switched Access Service, the customer desired line or trunk directionality and/or traffic routing of the Switched Access Service between the customer's premises and the entry switch, as well as the number of transmission paths are specified on the customer's order for service.

In addition, the customer shall specify on the customer's order for service, the Switched Transport facilities to be provided (i.e., Entrance Facility or EISCT, Direct Trunked transport and/or Tandem Switched transport). When specifying the Switched Transport facilities to be provided, the customer must indicate if the facilities to be provided are existing (i.e., spare transmission paths) or are new.

6. Switched Access Service (Cont'd)

6.1 General (Cont'd)

6.1.2 Rate Categories

There are four rate categories which apply to Switched Access Service:

- Switched Transport (described in 6.1.2(A) following)
- Local Switching (described in 6.1.2(B) following)
- Common Line (described in Sections 3. and 4. preceding)
- Transport Interconnection Charge (described in 6.1.2(B)(3) following)

There are also specific rates which apply to Network Access Services (described in 6.8.4 following).

In addition, there is a Directory Assistance Information Surcharge that applies to all Switched Access Basic Service arrangements and Feature Groups. The description and application of these charges are set forth in 6.7.13 following.

6. Switched Access Service (Cont'd)

6.1 General (Cont'd)

6.1.2 Rate Categories (Cont'd)

The following diagram depicts a generic view of the components of Switched Access Service and the manner in which the components are combined to provide a complete Access Service.

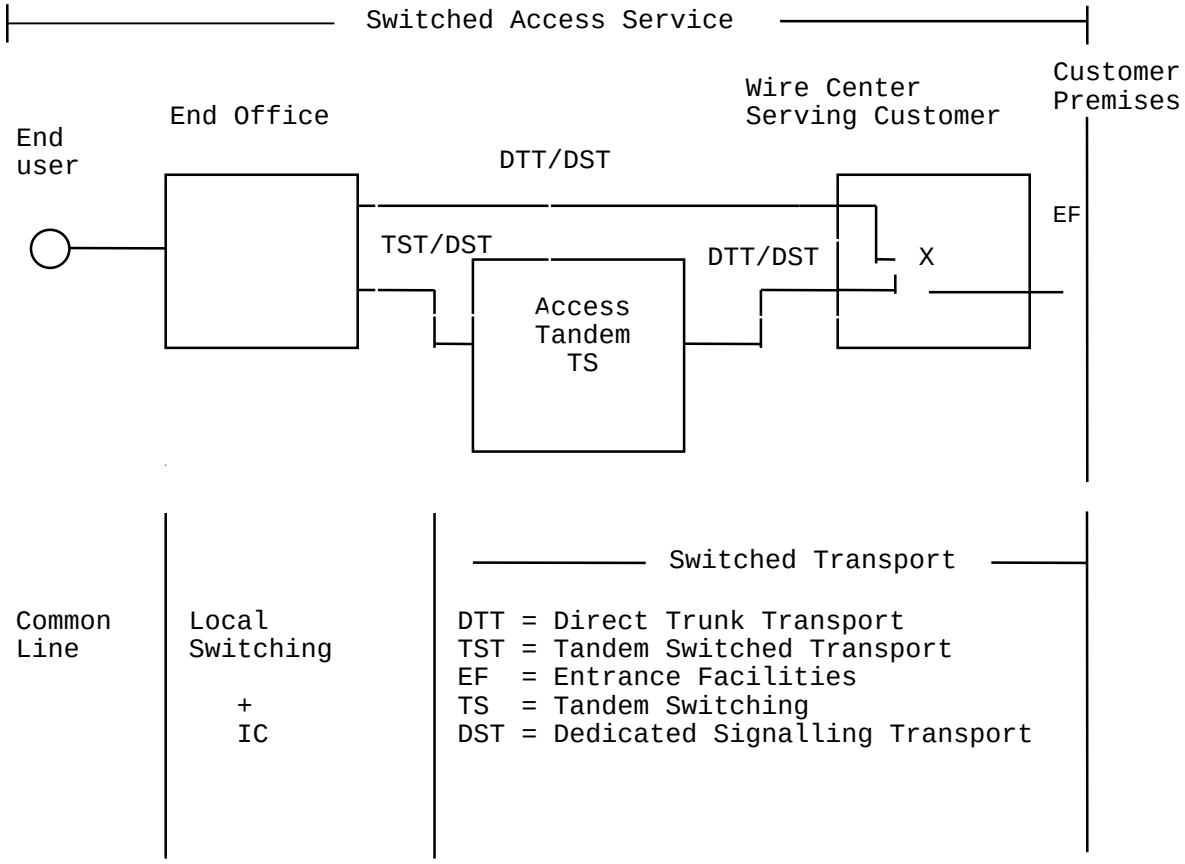

LS - Local Switching
IC - Interconnection Charge
CL - Common Line

Common Line access is provided under Section 3. and 4. preceding.

6. Switched Access Service (Cont'd)

6.1 General (Cont'd)

6.1.2 Rate Categories (Cont'd)

(A) Switched Transport

Switched Transport elements are defined as follows:

(1) Entrance Facility

Entrance Facility is defined as the transmission path between the customer's premises and the Serving Wire Center where the customer would normally obtain local dial tone. The Entrance Facility rate is a non distance sensitive flat monthly recurring charge. The Entrance Facility may be order with an analog or digital interface. Voice frequency (DS0), DS1 and DS3 interface groups are defined in 15 following.

Switched Access Entrance Facility rates and charges are set forth in 6.8.1 following

6. Switched Access Service (Cont'd)

6.1 General (Cont'd)

6.1.2 Rate Categories (Cont'd)

(A) Switched Transport (cont'd)

(2) Direct Trunked Transport

Direct Trunked Transport is defined as the dedicated transmission path between the customer's Serving Wire Center and an access tandem, hub or end office where the customer's originating and/or terminating traffic is switched. Direct Trunked Transport is a distance sensitive mileage rate element as set forth in 6.8.1 following.

The Direct Trunked Transport mileage rate is calculated on the airline distance between the Serving Wire Center associated with a customer designated premise and the access tandem, hub or end office switch. To determine the rate, compute the mileage using the V&H coordinates method, as set forth in the National Exchange Carrier Association Tariff F.C.C. No. 4. Exceptions to the mileage measurement rules are set forth in 6.7.11 following.

6. Switched Access Service (Cont'd)

6.1 General (Cont'd)

6.1.2 Rate Categories (Cont'd)

(A) Switched Transport (Cont'd)

(3) Tandem Switched Transport

Tandem Switched Transport is provided as five subelements:

-Tandem-Switched Transmission/Common Transport
-Host Remote Transmission
-Tandem Switching
-Dedicated Tandem Trunk Port
-Tandem End Office Multiplexing

The application of the Tandem-Switched Transport subelements is set forth in (a),(b), (c), (d) and (e) following.

(a) Tandem Switched Transmission/Common Transport

(1) Tandem-Switched Transmission/Common Transport has two rates: a per access minute of use rate and a per access minutes of use per mile rate. The per access minute of use rate applies to the non-distance sensitive portion of the Tandem-Switched Transport for the termination of both ends of the facility. The per access minute of use per mile rate applies to the distance sensitive portion of the Tandem-Switched Transport facility. When the mileage for Tandem-Switched Transmission/Common Transport is zero, these rates will not apply.

ACCESS SERVICE

6. Switched Access Service (Cont'd)

6.1 General (Cont'd)

6.1.2 Rate Categories (Cont'd)

(A) Switched Transport (Cont'd)

(3) Tandem Switched Transport

(a) Tandem Switched Transmission/Common Transport (Cont'd)

(1) (Cont'd)

The per access minute of use and a per access minutes of use per mile rate also applies to interoffice links that are provided for the common use of all customers but which are not switched through an access tandem. The Telephone Company will identify this application of Tandem-Switched Transmission as Common Transport.

Common Transport may be associated with both tandem routed services (such as when Tandem-Switched Transport is to a host office to access remotes) and with direct routed services (as set forth in 6.7.11). Mileage for Common Transport is always measured separately from Tandem-Switched Transmission and Direct-Trunked Transport.

(2) Mileage measurement is described in 6.7.11.

(b) Host Remote Transmission

The Host Remote Transmission subelement applies between the Host and the remote for the common use of all customers but which are not switched through an access tandem. When both Tandem-Switched Transmission and Host Remote Transmission are applicable, mileage is measured separately.

(c) Tandem Switching

The access tandem switching rate for tandem switched transport is a usage sensitive charge based on the originating and terminating minutes of use via the access tandem switch.

(d) Tandem End Office Multiplexing

Tandem Multiplexing provides for the multiplexing equipment functionality on the end office side of the tandem switch and for terminating FGA BSA-A minutes of use between the dialtone office and the end office.

(e) Dedicated Tandem Trunk Port

The Dedicated Tandem Trunk Port provides for the port associated with each in service dedicated trunk terminating on the serving wire center side of the access tandem.

(This page filed under Transmittal No. 1)

6. Switched Access Service (Cont'd)

6.1 General (Cont'd)

6.1.2 Rate Categories (Cont'd)

(A) Switched Transport (Cont'd)

(4) Interface Groups

Five Interface Groups are provided for terminating the Switched Transport at the customer's premises. Each Interface Group provides a specified premises interface (e.g., two-wire, four-wire, DS1, etc.). Where transmission facilities permit, the individual transmission path between the customer's designated premises and the first point of switching may at the option of the customer be provided with optional features as set forth in (2)(a) and (b) following.

As a result of the customer's access order and the type of Telephone Company transport facilities serving the customer's premises, the need for signaling conversions or two-wire to four-wire conversions, or the need to terminate digital or high frequency facilities in channel bank equipment may require that Telephone Company equipment be placed at the customer's designated premises. For example, if a voice frequency interface is ordered by the customer and the Telephone Company facilities serving the customer's designated premises are digital, then Telephone Company channel bank equipment must be placed at the customer's designated premises in order to provide the voice frequency interface ordered by the customer.

The CCSAC optional feature is available only with Feature Group D or Access Trunk Arrangement 101XXXX. FGD or ATAXXXX trunks are provided using Interface Groups 6 and 9. SS7 signaling connections are provided using Interface Group 6. Technical Publication TR-TSV-000905 provide the technical requirements.

6. Switched Access Service (Cont'd)

6.1 General (Cont'd)

6.1.2 Rate Categories (Cont'd)

(A) Switched Transport (Cont'd)

(4) Interface Groups (Cont'd)

The 64CCC option is provided using interface group 6. Technical Publication TR-NWT-000938 and TR-TSV-000962 provide additional technical requirements for 64CCC. Technical specifications concerning the available interface groups are set forth in 15.1 following.

(5) Optional Features

Where transmission facilities permit, the Telephone Company will, at the option of the customer, provide the following nonchargeable optional features in association with Switched Transport.

(a) Supervisory Signaling

Where the transmission parameters permit, and where signaling conversion is required by the customer to meet its signaling capability, the customer may order an optional supervisory signaling arrangement for each transmission path provided as set forth in 15.1.12 following.

The types of supervisory signaling available are described in Technical Reference TR-NPL-000334.

(b) Customer Specified Entry Switch Receive Level (TLV)

This feature allows the customer to specify the receive transmission level at the first point of switching. The range of transmission levels which may be specified is described in Technical Reference TR-NPL-000334. This feature is available with Interface Groups 2 through 10 for ALA or ATA950 and Feature Groups A and B.

6. Switched Access Service (Cont'd)

6.1 General (Cont'd)

6.1.2 Rate Categories (Cont'd)

(A) Switched Transport (Cont'd)

(5) Optional Features (Cont'd)

(c) Customer Specification of Switched Transport Termination (NL S+T+)

This option allows the customer to specify, for ATA950 or for Feature Group B routed directly to an end office or access tandem, a four-wire termination of the Local Transport at the entry switch in lieu of a Telephone Company selected two-wire termination. This option is available only when the ATA950 or Feature Group B arrangement is provided with Type B Transmission Specifications.

(d) Common Channel Signaling Access Capability (CCSAC)

This optional feature allows the customer to exchange signaling for call set-up via SS7 out of band signaling. This option is available only with FGD or ATAXXXX. This option requires the establishment of a SS7 Signaling Connection between the customer's signaling point of interface (SPOI) and the Telephone Company's Signaling Transfer Point (STP), as set forth in 6.1.2(A)(1) preceding.

(e) 64 Clear Channel Capability (64CCC)

This option is available with Feature Group D (FGD) and Access Trunk Arrangement 101XXXX (ATAXXX) with the CCSAC optional feature as set forth in (d) preceding.

6. Switched Access Service (Cont'd)

6.1 General (Cont'd)

6.1.2 Rate Categories (Cont'd)

(A) Switched Transport (Cont'd)

(5) Optional Features (Cont'd)

(e) 64 Clear Channel Capability (64CCC) (Cont'd)

64 CCC is designated as a new traffic type and requires the establishment of a new minimum period as described in 6.7.3 preceding.

64CCC will be provided in connection with FGD and ATAXXX with CCSAC where appropriate Telephone Company equipment and other facilities exist, as specified in the National Exchange Carrier Association, Inc. Tariff F.C.C. No. 4. Technical Reference TR-NWT-000938 provides the technical specifications for 64CCC. The SS7 protocol requirements for 64CCC are specified in TR-TSV-000962.

(f) Tandem Signaling

This option provides Carrier Identification Code (CIC) and OZZ signaling information necessary for tandem switching. This optional feature is available only on one-way originating Feature Group D trunks from equal access end offices to a Tandem Switching Provider's (TSP) point of termination. This option is offered with either multifrequency (MF) or Signaling System 7 (SS7) signaling protocol.

In the MF signaling format, Carrier Identification Code (CIC) and OZZ will be forwarded. In the SS7 signaling format, Transit Network Selection (TNS) will be forwarded in the Initial Address Message.

TSP's can terminate switched access traffic to Telephone Company end offices or access tandems over any currently tariffed Feature Group Service. The customer ordering the terminating Feature Group Service will be the customer of record and billed the terminating usage. This customer may be either a TSP or a customer of the TSP.

6. Switched Access Service (Cont'd)

6.1 General (Cont'd)

6.1.2 Rate Categories (Cont'd)

(A) Switched Transport (Cont'd)

(5) Optional Features (Cont'd)

(b) Tandem Signaling (Cont'd)

If the TSP is the customer of record and requests the Telephone Company to separately bill the traffic usage to its multiple customers, the TSP must provide to the Telephone Company billing tapes in a format to be mutually agreed upon by the Telephone Company and the TSP. These tapes must be provided in a standard EMI format and received by the Telephone Company within a mutually agreed upon timeframe.

Technical specifications for Tandem Signaling are set forth in Generic Requirements GR-3334-CORE.

A maximum of four OZZ codes (MF) or circuit codes (SS7) per CIC per end office will be provided. The Telephone Company will control and assign the OZZ codes to the customer ordering this feature. FGD trunks with Tandem Signaling may not be alternately routed to the Telephone Company's Access Tandem.

(6) Chargeable Optional Features

(a) Multiplexing

This option allows the customer to convert a DS3 (44.736 Mbps) to 28 DS1 channels or a DS1 (1.544 Mbps) to 24 DS0 channels (64kbps). A charge is specified in 6.8.1(I) following per multiplexing arrangement.

(N)

6. Switched Access Service (Cont'd)

6.1 General (Cont'd)

6.1.2 Rate Categories (Cont'd)

(A) Switched Transport (Cont'd)

(6) Chargeable Optional Features (Cont'd)

(b) Carrier Identification Parameter (CIP)

Technical specifications for Carrier Identification Parameter (CIP) are set forth in Technical References GR-394-CORE and GR-905-CORE.

Carrier Identification Parameter is an optional feature which identifies and transmits the CIC within the SS7 out of band call set up, known as the initial address message (IAM), associated with each call sent to subscribing customers. CIP is only available with originating FGD Switched Access Service from suitably equipped SS7 out of band signaling end offices and access tandems. When CIP is provided, the switch will transmit the 3 or 4 digit CIC of the presubscribed line or the CIC selected when the end user places a call using 101XXXX dialing. CIP is provided per trunk group at a monthly recurring rate as specified in 6.8.1(I). (N)

6. Switched Access Service (Cont'd)

6.1 General (Cont'd)

6.1.2 Rate Categories (Cont'd)

(B) Local Switching

This rate category provides for (1) local end office switching, i.e., the common switching functions associated with the various Switched Access Service arrangements, (2) the termination of switched transport at end offices, (3) the termination of common lines and WATS Access Lines at end offices, (4) intercept functions, i.e., the termination of certain calls at a Telephone Company intercept operator or recording, (5) the dedicated End Office Port terminating in the end office, and (6) the Shared End Office Trunk Port for termination of Common Transport trunks for tandem routed traffic.

This category includes usage sensitive rates and both chargeable and nonchargeable optional features.

(1) Usage Sensitive Rates

The usage sensitive rates are applied on a per minute of use basis and are divided into two categories: LS1 and LS2 - which pertain to Feature Groups; LS1A and LS2A which pertain to unbundled Basic Service Arrangements.

(a) The first category, LS1, provides local switching functions for Feature Groups A and B, except for Feature Group A and Feature Group B used to terminate traffic to a WATS Access Line (WAL) provided from an equal access office.

LS1A provides local switching functions for Access Line Arrangement (ALA) and Access Trunk Arrangement with the 950 Option (ATA950), except for ALA and ATA950 used to terminated traffic to a WATS Access line (WAL) provided from an equal access office.

(b) The second category, LS2, provides local switching functions for Feature Group A and Feature Group B used to terminate traffic to a WATS Access Line (WAL) provided from an equal access end office, Feature Group C, Feature Group D and 800 or 900 Access Service.

LS2A provides local switching functions for Access Line Arrangements and Access Trunk Arrangement with the 950 Option used to terminate traffic to a WATS Access Line (WAL) provided from an equal access end office, Access Trunk Arrangement without Equal Access (ATANEA), Access Trunk Arrangement with 101XXXX (ATAXXXX) and 800 or 900 Access Service.

6. Switched Access Service (Cont'd)

6.1 General (Cont'd)

6.1.2 Rate Categories (Cont'd)

(B) Local Switching (Cont'd)

Where end offices are appropriately equipped, international dialing also may be provided as a capability of LS2 or LSA2. International dialing provides the capability of switching international calls with service prefix and address codes having more digits than are capable of being switched through a standard ATANEA or ATAXXX or FGC or FGD equipped end office.

Rates for LS1 and LS2 are set forth in 6.8.2(A) following. The application of these rates with respect to individual Feature Groups is as set forth in 6.7.1(D) following.

Access tandem switching provides the function of switching traffic from the customer's serving wire center through the access tandem to the customer designated end office switch(es).

Rates for LS1A and LS2A are set forth in 6.8.2 following. The application of these rates with respect to individual Basic Service Arrangements is as set forth in 6.7.1 (D) following.

Rates for Local Switching and Access Tandem Switching are set forth in 6.8 following.

The number of local switching transmission paths will be determined as set forth in 6.5.5 following.

(2) Optional Features

Various Common Switching, Transport Termination and WATS Access Line Termination optional features are available and are described in 6.3 following.

(This page filed under Transmittal No. 1)

6. Switched Access Service (Cont'd)

6.1 General (Cont'd)

6.1.2 Rate Categories (Cont'd)

(B) Local Switching (Cont'd)

(3) Transport Interconnection Charge

The Transport Interconnection charge rate elements are applied on a per minute of use basis to all access customers that interconnect with the Telephone Company's switched access network. The Transport Interconnection Charge rate elements are assessed on a premium/non-premium, originating and terminating basis based on the equal access capabilities of the end offices.

6. Switched Access Service (Cont'd)

6.1 General (Cont'd)

6.1.3 Special Facilities Routing

Any customer may request that the facilities used to provide Switched Access Service be specially routed. The regulations, rates and charges for Special Facilities Routing (i.e., Avoidance, Diversity and Cable-Only) are set forth in 11. following.

6.1.4 Design Layout Report

At the request of the customer, the Telephone Company will provide to the customer the makeup of the facilities and services provided from the customer's premises to the first point of switching. This information will be provided in the form of a Design Layout Report. The Design Layout Report will be provided to the customer at no charge, and will be reissued or updated whenever these facilities are materially changed.

6.1.5 Testing

(A) Acceptance Testing

At no additional charge, the Telephone Company will, at the customer's request, cooperatively test, at the time of installation, the following parameters: loss, C-notched noise, C-message noise, 3-tone slope, d.c. continuity and operational signaling. When the Local Transport is provided with Interface Groups 2 through 10, and the Transport Termination is two-wire (i.e., there is a four-wire to two-wire conversion in Local Transport), balance parameters (equal level echo path loss) may also be tested.

Entrance Facility and/or Direct Trunked Transport acceptance tests will include tests for the parameters applicable to the service as specified in the order for service.

6. Switched Access Service (Cont'd)

6.1 General (Cont'd)

6.1.5 Testing (Cont'd)

(B) Routine Testing

At no additional charge, the Telephone Company will, at the customer's request, test after installation on an automatic or manual basis, 1004 Hz loss, C-message noise and Balance (Return loss).

In the case of automatic testing, the customer shall provide remote office test lines and 105 test lines with associated responders or their functional equivalent.

The frequency of these tests will be that which is mutually agreed upon by the customer and the Telephone Company, but shall consist of not less than quarterly 1004Hz Loss and C-message noise tests and an annual Balance test. Trunk test failures requiring customer participation for trouble resolution will be provided to the customer on an as-occurs basis.

Additional tests may be ordered as set forth in 13.3.5 following. Charges for these additional tests are set forth in 13.3.5(C) following.

6.1.6 Ordering Options and Conditions

Switched Access Service is ordered under the Access Order provisions set forth in 5.2 preceding. Also, included in that section are other charges which may be associated with ordering Switched Access Service (e.g., Service Date Change Charges, Cancellation Charges, etc.).

6.1.7 CCSAC Testing Requirements

For FGD or ATAXXX with the CCSAC optional feature, network compatibility and other operational tests will be performed cooperatively by the Telephone Company and the customer. These tests are as specified in the Bellcore Common Channel Signaling Network Specification Technical Reference TR-TSV-000905. These tests must be successfully completed prior to providing the CCSAC optional feature.

Switched Access Service (Cont'd)

6.2 Provision and Description of Switched Access Service

Switched Access Service is provided in two different arrangements. The two arrangements provisioned are Direct trunked transport and Tandem Switched transport. Entrance facilities may be provisioned for Direct trunked transport only. The provision of each Switched access Service requires Switched Transport facilities and the appropriate End Office functions. There are various optional features available with the Feature Groups and Access Arrangements. The Switched Transport, Common Switching and Transport Termination optional features are available at all Telephone Company end office switches, unless stated otherwise. In addition, a WATS Access Line Service as described in 7.7.5 following may, at the option of the customer, be provided for use with Switched Access Service. WATS Access Line Termination optional features are available in end office designated as WATS Serving Offices.

There are three specific voice transmission specifications (i.e., Types A, B, and C) that have been identified for the provision of Switched Access Service.

Switched Access Service is arranged for either originating, terminating or two-way calling. Originating calling permits the delivery of calls from Telephone Exchange Service locations to the customer's premises. Terminating calling permits the delivery of calls from the customer's premise to Telephone Exchange Service locations. Two-way calling permits the delivery of calls in both directions, but not simultaneously.

Following are detailed descriptions of the available Switched Access Services. Each Switched Access Service is described in terms of its specific physical characteristics and calling patterns, the transmission specifications with which it is provided, the optional features available for use with it and the standard testing capabilities.

6. Switched Access Service (Cont'd)

6.2 Provision and Description of Switched Access Service (Cont'd)

Following are detailed descriptions of each of the available Basic Service Arrangements and Feature Groups. Each Arrangement or Feature Group is described in terms of its specific physical characteristics and calling capabilities, the transmission specifications with which it is provided, the optional features available for use with it and the standard testing capabilities.

6.2.1 Access Line Arrangement (ALA) and Feature Group A (FGA)

(A) Description

ALA and FGA Access, which is available to all customers, provides line side access to Telephone Company end office switches with an associated seven digit local telephone number for the customer's use in originating communications from and terminating communications to an Interexchange Carrier's Interstate Service or a customer provided interstate communications capability. The customer must specify the Interexchange Carrier to which the ALA or FGA service is connected or, in the alternative, specify the means by which the ALA or FGA access communications is transported to another state.

(1) ALA or FGA is provided in connection with Telephone Company electronic and electromechanical end offices. At the option of the customer, ALA or FGA is provided on a single or multiple line group basis and is arranged for originating calling only, terminating calling only, or two-way calling.

(2) ALA or FGA provides a line side termination at the first point of switching (dial tone office). The line side termination will be provided with either ground start supervisory signaling or loop start supervisory signaling. The type of signaling is at the option of the customer.

6. Switched Access Service (Cont'd)

6.2 Provision and Description of Switched Access Service (Cont'd)

6.2.1 Access Line Arrangement (ALA) and Feature Group A (FGA) (Cont'd)

(A) Description (Cont'd)

(3) The Telephone Company shall select the first point of switching, within the selected LATA, at which the line side termination is to be provided unless the customer requests a different first point of switching and Telephone Company facilities and measurement capabilities, where necessary, are available to accommodate such a request.

(4) A seven digit local telephone number assigned by the Telephone Company is provided for access to ALA or FGA switching in the originating direction. The seven digit local telephone number will be associated with the selected end office switch and is of the form NXX-XXXX.

If the customer requests a specific seven digit telephone number that is not currently assigned, and the Telephone Company can, with reasonable effort, comply with that request, the requested number will be assigned to the customer.

(5) ALA or FGA switching, when used in the terminating direction, is arranged with dial tone start-dial signaling. When used in the terminating direction ALA or FGA switching may, at the option of the customer, be arranged for dial pulse or dual tone multifrequency address signaling, subject to availability of equipment at the first point of switching. When ALA or FGA switching is provided in a hunt group or uniform call distribution arrangement, all ALA or FGA switching will be arranged for the same type of address signaling.

6. Switched Access Service (Cont'd)

6.2 Provision and Description of Switched Access Service (Cont'd)

6.2.1 Access Line Arrangement (ALA) and Feature Group A (FGA) (Cont'd)

(A) Description (Cont'd)

(6) No address signaling is provided by the Telephone Company when ALA or FGA Switching is used in the originating direction. Address signaling in such cases, if required by the customer, must be provided by the customer's end user using inband tone signaling techniques. Such inband tone address signals will not be regenerated by the Telephone Company and will be subject to the ordinary transmission capabilities of the Local Transport provided.

(7) ALA or FGA switching, when used in the terminating direction, may be used to access valid NXXs in the LATA, local operator service (0- and 0+), Directory Assistance (411 where available and 555-1212), emergency reporting service (911 where available), exchange telephone repair (611 where available), time or weather announcement services of the Telephone Company, community information services of an information service provider, and other

6. Switched Access Service (Cont'd)

6.2 Provision and Description of Switched Access Service (Cont'd)

6.2.1 Access Line Arrangements (ALA) and Feature Group A (FGA) (Cont'd)

(A) Description (Cont'd)

(7) (Cont'd)

customers' services (by dialing the appropriate digits). Charges for ALA or FGA terminating calls requiring operator assistance or calls to 611 or 911 will only apply where sufficient call details are available. Additional non-access charges will also be billed on a separate account for (1) an operator surcharge, as set forth in the local exchange tariffs, for local operator assistance (0- and 0+) calls, (2) calls to certain community information services, for which rates are applicable under Telephone Company exchange service tariffs, e.g., 976 (DIAL-IT) Network Services, and, (3) calls from an ALA or a FGA line to another customer's service in accordance with that customer's applicable service rates when the Telephone Company performs the billing function for that customer. For calls to Directory Assistance (411 and 555-1212, whichever is available), Local Transport rates for ALA or FGA Switched Access Service will not apply. Instead, Local Transport for calls to this service is subject to a per call rate as set forth in 9.6(B) following. Additionally, calls to Directory Assistance are subject to the Directory Assistance Service Call rate set forth in 9.6(A) following.

6. Switched Access Service (Cont'd)

6.2 Provision and Description of Switched Access Service (Cont'd)

6.2.1 Access Line Arrangement (ALA) and Feature Group A (FGA) (Cont'd)

(A) Description (Cont'd)

(8) When an ALA or a FGA switching arrangement for an individual customer (a single line or entire hunt group) is discontinued at an end office, an intercept announcement is provided. This arrangement provides, for a limited period of time, an announcement that the service associated with the number dialed has been disconnected.

(B) Optional Features

(1) Common Switching Optional Features and Basic Service Elements

(a) Hunt Group Arrangement*
(b) Uniform Call Distribution Arrangement*
(c) Nonhunting Number for Use with Hunt Group Arrangement or Uniform Call Distribution Arrangement*
(d) Call Denial
(e) Service Code Denial
(f) Hunt Group Arrangement for Use with WATS Access Line Service
(g) Uniform Call Distribution Arrangement for Use with WATS Access Line Service
(h) Nonhunting Number for Use with Hunt Group Arrangement or Uniform Call Distribution Arrangement for Use with WATS Access Line Service
(i) Band Advance Arrangement for Use with WATS Access Line Service
(j) Call Transfer*
(k) Direct Inward Dialing (DID)*
(l) Answer Supervision Lineside

*For ALA customers (a), (b), (c), (j) and (k) will be ordered under 6.8.2 Common Switching Optional Features and BSEs

(This page filed under Transmittal No. 1)

6. Switched Access Service (Cont'd)

6.2 Provision and Description of Switched Access Service (Cont'd)

6.2.1 Access Line Arrangement (ALA) and Feature Group A (FGA) (Cont'd)

(B) Optional Features (Cont'd)

(2) Transport Termination Optional Features

(a) Two-way operation with dial pulse address signaling and loop start supervisory signaling
(b) Two-way operation with dial pulse address signaling and ground start supervisory signaling
(c) Two-way operation with dual tone multifrequency address signaling and loop start supervisory signaling
(d) Two-way operation with dual tone multifrequency address signaling and ground start supervisory signaling
(e) Terminating operation with dial pulse address signaling and loop start supervisory signaling
(f) Terminating operation with dial pulse address signaling and ground start supervisory signaling
(g) Terminating operation with dual tone multifrequency address signaling and loop start supervisory signaling
(h) Terminating operation with dual tone multifrequency address signaling and ground start supervisory signaling
(i) Originating operation with loop start supervisory signaling
(j) Originating operation with ground start supervisory signaling

(3) Local Transport Optional Features

(a) Supervisory Signaling (as set forth in 6.1.2(A)(2)(a) preceding)
(b) Customer Specified Entry Switch Receive Level

(This page filed under Transmittal No. 1)

6. Switched Access Service (Cont'd)

6.2 Provision and Description of Switched Access Service (Cont'd)

6.2.1 Access Line Arrangement (ALA) and Feature Group A (FGA) (Cont'd)

(B) Optional Features (Cont'd)

(4) Certain other features which may be available in connection with ALA or Feature Group A are provided under the Telephone Company's local and/or general exchange service tariffs where technically feasible.

These are:
(a)Custom Calling Features
(b)Remote Call Forwarding
(c)Bill Number Screening
(d)IntraLATA extensions
(e)900 Call Blocking

(C) Transmission Specifications

ALA or FGA is provided with either Type B or Type C Transmission Specifications. The specifications for the associated parameters are guaranteed to the first point of switching. Type C Transmission Specifications are provided with Interface Group 1 and Type B is provided with Interface Groups 2 through 10. Type DB Data Transmission Parameters are provided with ALA or FGA to the first point of switching.

(D) Testing Capabilities

ALA or FGA is provided, in the terminating direction where equipment is available, with seven digit access to balance (100 type) test line and milliwatt (102 type) test line. In addition to the tests described in 6.1.5 preceding which are included with the installation of service and as ongoing routine testing, Additional Cooperative Acceptance Testing and Additional Manual Testing are available as set forth in 13.3.5 following.

(This page filed under Transmittal No. 1)

6. Switched Access Service (Cont'd)

6.2 Provision and Description of Switched Access Service (Cont'd)

6.2.2 Access Trunk Arrangement 950 (ATA950) and Feature Group B (FGB)

(A) Description

ATA950 and FGB Access, which is available to all customers, provides trunk side access to Telephone Company end office switches with an associated uniform access code generally 950-1XXX or 950-0XXX for the customer's use in originating communications from and terminating communications to an Interexchange Carrier's Interstate Service or a customer provided interstate communications capability. The customer must specify the Interexchange Carrier to which the ATA950 or FGB service is connected or, in the alternative, specify the means by which the ATA950 or FGB access communications is transported to another state.

(1) ATA950 or FGB, when directly routed to an end office (i.e., provided without the use of an access tandem switch), is provided at appropriately equipped Telephone Company electronic end office switches. When provided via Telephone Company designated electronic access tandem switches, ATA950 or FGB switching is provided at Telephone Company electronic and electromechanical end office switches.

(2) ATA950 or FGB is provided as trunk side switching through the use of end office or access tandem switch trunk equipment. The switch trunk equipment is provided with wink start start-pulsing signals and answer and disconnect supervisory signaling

(3) ATA950 or FGB switching is provided with multifrequency address signaling in both the originating and terminating directions. Except for ATA950 or FGB switching provided with the automatic number

6. Switched Access Service (Cont'd)

6.2 Provision and Description of Switched Access Service (Cont'd)

6.2.2 Access Trunk Arrangement 950 (ATA950) and Feature Group B (FGB) (Cont'd)

(A) Description (Cont'd)

(3) (Cont'd)

identification (ANI) or rotary dial station signaling arrangements as set forth in 6.3 following, any other address signaling in the originating direction, if required by the customer, must be provided by the customer's end user using inband tone signaling techniques. Such inband tone address signals will not be regenerated by the Telephone Company and will be subject to the ordinary transmission capabilities of the Switched Transport provided.

(4) The access code for ATA950 or FGB switching is generally a uniform access code. The form of the uniform access code is 950-0XXX or 950-1XXX for carriers. One uniform access code will be assigned to the customer for the customer's domestic communications and another will be assigned to the customer for its international communications, if required. These uniform access codes will be the assigned access numbers of all ATA950 or FGB switched access service provided to the customer by the Telephone Company.

(5) ATA950 or FGB switching, when used in the terminating direction, may be used to access valid NXXs in the LATA, time or weather announcement services of the Telephone Company, community information services of an information service provider and other customers'

6. Switched Access Service

6.2 Provision and Description of Switched Access Service (Cont'd)

6.2.2 Access Trunk Arrangement 950 (ATA950) and Feature Group B (FGB) (Cont'd)

(A) Description (Cont'd)

(5) (Cont'd)

services (by dialing the appropriate digits). When directly routed to an end office, only those valid NXX codes served by that end office may be accessed. When routed through an access tandem, only those valid NXX codes served by end offices directly subtending the access tandem may be accessed. Where direct trunking from a single access tandem within a IATA to all end offices subtending that tandem is not available, an alternate route may be used if available. In the case of LATAs with two access tandems, only those valid NXX codes served by end offices directly subtending either one of the access tandems may be accessed. The customer will also be billed additional non-access charges for calls to certain community information services for which rates are applicable under Telephone Company exchange service tariffs, e.g., 976 (DIAL-IT) Network Service. Additionally, non-access charges will also be billed for calls from an ATA950 or FGB trunk to another customer's service in accordance with that customer's applicable service rates when the Telephone Company performs the billing function for that customer. Calls in the terminating direction will not be completed to 950-OXXX or 950-lXXX access codes, local operator assistance (0- and 0+), Directory Assistance (411 and 555-1212), service codes (611 and 911) or 1OXXX access codes. Calls will be completed to Directory Assistance (NPA- 555-1212 or 555-1212) when ATA950 or FGB switching is combined with Directory Assistance switching. The combination of ATA950 or FGB Switched Access Service with DA service is provided as set forth in 9. following. ATA950 or FGB may not be switched, in the terminating direction, to Access Trunk Arrangements 950, NEA, XXX or to Switched Access Service Feature Groups B, C and D.

(This page filed under Transmittal No. 1)

6. Switched Access Service (Cont'd)

6.2 Provision and Description of Switched Access Service (Cont'd)

6.2.2 Access Trunk Arrangement 950 (ATA950) and Feature Group B (FGB) (Cont'd)

(A) Description (Cont'd)

(6) The Telephone Company will establish a trunk group or groups for the customer at end office switches or access tandem switches where ATA950 or FGB switching is provided. When required by technical limitations, a separate trunk group will be established for each type of ATA950 or FGB switching arrangement provided. Different types of ATA950 or FGB or other switching arrangements may be combined in a single trunk group at the option of the Telephone Company.

(7) When all ATA950 or FGB switching arrangements are discontinued at an end office and/or in a LATA, an intercept announcement is provided. This arrangement provides, for a limited period of time, an announcement that the service associated with the number dialed has been disconnected.

(B) Optional Features

(1) Common Switching ORtional Features

(a) Automatic Number Identification (ANI)

(b) Up to 7 Digit Outpulsing of Access Digits to Customer

(c) Hunt Group Arrangement for Use with WATS Access Line Service.

(This page filed under Transmittal No. 1)

6. Switched Access Service (Cont,d)

6.2 Provision and Description of Switched Access Service-(Cont,d)

6.2.2 Access Trunk Arrangement 950 (ATA950) and Feature Group B (FGB) (Cont'd)

(B) Optional Features (Cont'd)

(1) Common Switching Optional Features (Cont'd)

(d) Uniform Call Distribution Arrangement for Use with WATS Access Line Service.

(e) Nonhunting Number for Use with Hunt Group Arrangement or Uniform Call Distribution Arrangement for Use with WATS Access Line Service.

(f) Band Advance Arrangement for Use with WATS Access Line Service.

(g) Alternate Traffic Routing

(2) Transport Termination Optional Features

(a) Rotary Dial Station Signaling

(3) Switched Transport Optional Features

(a) Customer Specification of Local Transport Termination

(b) Supervisory Signaling (as set forth in 6.1.2(A)(2)(a) preceding)

(c) Customer Specified Entry Switch Receive Level

(This page filed under Transmittal No. 1)

6. Switched Access Service (Cont'd)

6.2 Provision and Description of Switched Access Service (Cont'd)

6.2.2 Access Trunk Arrangement (ATA950) and Feature Group B (FGB) (Cont'd)

(B) Optional Features (Cont'd)

(4) WATS Access Line Termination Optional Features

(a) E & M Supervisory Signaling

(5) Bill Number Screening

Another feature, Bill Number Screening, which may be available in connection with ATA950 or FGB, is provided under the Telephone Company's local and/or general exchange service tariffs.

(C) Transmission Specifications

ATA950 or FGB is provided with either Type B or Type C Transmission Specifications. The specifications for the associated parameters are guaranteed to the end office when routed directly or to the first point of switching when routed via an access tandem. Type C Transmission Specifications are provided with Interface Group 1 and Type B is provided with Interface Groups 2 through 10. Type DB Data Transmission Parameters are provided with ATA950 or FGB to the first point of switching.

(D) Testing Capabilities

ATA950 or FGB is provided, in the terminating direction where equipment is available, with seven digit access to balance (100 type) test line, milliwatt (102 type) test line, nonsynchronous or synchronous test line, automatic transmission measuring (105 type) test line, data transmission (107 type) test line, loop around test line, short circuit test line and open circuit test line. In addition to the tests described in 6.1.5

6. Switched Access Service (Cont'd)

6.2 Provision and Description of Switched Access Service (Cont'd)

6.2.2 Access Trunk Arrangement 950 (ATA950) and Feature Group B (FGB) (Cont'd)

(D) Testing Capabilities (Cont'd)

preceding which are included with the installation of service and as ongoing routine testing. Additional Cooperative Acceptance Testing, Additional Automatic Testing, and Additional Manual Testing are available as set forth in 13.3.5 following.

6.2.3 Access Trunk Arrangement Non Equal Access (ATANEA) and Feature Group C (FGC)

(A) Description

ATANEA and FGC Access, which is available only to providers of MTS and WATS, provides trunk side access to Telephone Company end office switches for the customer's use in originating and terminating communications. This service is available in all end offices which are not equipped for ATAXXX or Feature Group D End Office Switching. Existing ATANEA or FGC Access will be converted to ATAXXX or Feature Group D access when it becomes available in an end office.

(1) ATANEA or FGC is provided at all Telephone Company end office switches on a direct trunk basis or via Telephone Company designated access tandem switches. ATANEA or Feature Group C switching is furnished to providers of MTS and WATS at an end office switch unless ATAXXX or Feature Group D end office switching is provided in the same office. When ATAXXX or FGD switching is available, ATANEA or FGC switching will not be provided.

(This page filed under Transmittal No. 1)

6. Switched Access Service

6. Switched Access Service (Cont'd)

6.2 Provision and Description of Switched Access Service (Cont'd)

6.2.3 Access Trunk Arrangement Non Equal Access (ATANEA) and Feature Group C (FGC) (Cont'd)

(A) Description (Cont'd)

(2) ATANEA or FGC is provided as trunk side switching through the use of end office or access tandem switch trunk equipment. The switch trunk equipment is provided with answer and disconnect supervisory signaling. Wink start start-pulsing signals are provided in all offices where available. in those offices where wink start start-pulsing signals are not available, delay dial start-pulsing signals will be provided, unless immediate dial pulse signaling is provided, in which case no start-pulsing signals are provided.

(3) ATANEA or FGC is provided with multifrequency address signaling except in certain electromechanical end office switches where multifrequency signaling is not available. In such switches, the address signaling will be dial pulse, revertive pulse, immediate dial pulse or panel call indicator signaling, whichever is available. Up to 12 digits of the called party number dialed by the customer's end user using dual tone multifrequency or dial pulse address signals will be provided by Telephone Company equipment to the customer's premises where the Switched Access Service terminates. Such called party number signals will be subject to the ordinary transmission capabilities of the Switched Transport provided.

6. Switched Access Service (Cont'd)

6.2 Provision and Description of Switched Access Service (Cont'd)

6.2.3 Access Trunk Arrangement Non Equal Access (ATANEA) and Feature Group C (FGC) (Cont'd)

(A) Description (Cont'd)

(4) No access code is required for ATANEA or FGC switching. The telephone number dialed by the customer's end user shall be a seven or ten digit number for calls in the North American Numbering Plan (NANP). For international calls outside the NANP, a seven to twelve digit number may be dialed. The form of the numbers dialed by the customer's end user is NXX-XXXX, 0 or I + NXX-XXXX, NPA + NXX-XXXX, 0 or 1 + NPA + NXX-XXXX, and, when the end office is equipped for International Direct Distance Dialing (IDDD), 01 + CC + NN or Oll + CC + NN.

(5) ATANEA or FCC switching, when used in the terminating direction, may be used to access valid NXXs in the LATA, time or weather announcement services of the Telephone Company, community information services of an information provider, and other customers' services (by dialing the appropriate codes) when the services can be reached using valid NXX codes. When directly routed to an end office, only those valid NXX codes served by that office-may be accessed. When routed through an access tandem, only those valid NXX codes served by offices subtending the access tandem may be accessed. Where measurement capabilities exist, the

6. Switched Access Service (Cont'd)

6.2 Provision and Description of Switched Access Service (Cont'd)

6.2.3 Access Trunk Arrangement Non Equal Access (ATANEA) and Feature Group C (FGC) (Cont'd)

(A) Description (Cont'd)

(5)(Cont'd)

customer will also be billed additional non-access charges for calls to certain community information services, for which rates are applicable under telephone Company exchange service tariffs, e.g., 976 (DIAL-IT) Network Services. Additionally, non-access charges will also be billed for calls from an ATANEA or FGC trunk to another customer's service in accordance with that customer's applicable service rates when the Telephone Company performs the billing function for that customer. Calls in the terminating direction will not be completed to 950-OXXX or 950-lXXX access codes, local operator assistance (0- and 0+), Directory assistance (411 and 555- 1212), service codes (611 and 911) and 1OXXX access codes. Calls will be completed to Directory Assistance (NPA-555-1212 or 555-1212) when ATANEA or FGC switching is combined with Directory Assistance switching. The combination of ATANEA or FGC Switched Access Service with DA Service is provided as set forth in 9. following. ATANEA or FGC may not be switched, in the terminating direction, to Access Trunk Arrangements 950, NEA, XXX or Switched Access Service Feature Groups B, C or D.

(This page filed under Transmittal No. 1)

6. Switched Access Service (Cont'd)

6.2 Provision and Description of Switched Access Service (Cont'd)

6.2.3 Access Trunk Arrangement Non Equal Access (ATANEA) and Feature Group C (FGC) (Cont'd)

(A) Description (Cont'd)

(6) The Telephone Company will establish a trunk group or groups for the customer at end office switches or access tandem switches where ATANEA or FGC switching is provided. When required by technical limitations, a separate trunk group will be established for each type of ATANEA or FGC switching arrangement provided. Different types of ATANEA or FGC or other switching arrangements may be combined in a single trunk group at the option of the Telephone Company.

6. Switched Access Service (Cont'd)

6.2 Provision and Description of Switched Access Service-(Cont'd)

6.2.3 Access Trunk Arrangement Non Equal Access (ATANEA) and Feature Group C (FGC) (Cont'd)

(B) Optional Features

(1) Common Switching Optional Features

(a) Automatic Number Identification (ANI)
(b) Service Class Routing
(c) Dial Pulse Address Signaling
(d) Delay Dial Start-Pulsing Signaling
(e) Immediate Dial Pulse Address Signaling
(f) Alternate Traffic Routing
(g) Trunk Access Limitation
(h) End Office End User Line Service Screening for Use with WATS Access Line Service
(i) Hunt Group Arrangement for Use with WATS Access Line Service
(j) Uniform Call Distribution Arrangement for Use with WATS Access Line Service
(k) Nonhunting Number for Use with Hunt Group Arrangement or Uniform Call Distribution Arrangement for Use with WATS Access Line Service
(l) Band Advance Arrangement for Use with WATS Access Line Service

6. Switched Access Service (Cont'd)

6.2 Provision and Description of Switched Access Service-(Cont'd)

6.2.3 Access Trunk Arrangement Non Equal Access (ATANEA) and Feature Group C (FGC) (Cont'd)

(B) Optional Features (Cont'd)

(2) Transport Termination Optional Features

(a) Operator Trunks - Modified Operator Service (MOS) - i.e., Coin, Non-Coin and Combined Coin and Non-Coin. (Non-Coin Trunks are provided at Telephone Company electronic and electromechanical end offices. Coin and Combined Coin and Non-Coin are provided only at Telephone Company electronic end offices and other Telephone Company end offices where equipment is available.)

(3) Switched Transport Optional Features

(a) Supervisory Signaling (as set forth in 6.1.2(A)(2)(a) preceding)

(4) WATS Access Line Termination Optional Features

(a) E & M Supervisory Signaling
(b) Dialed Number Identification Service

(C) Transmission Specifications

ATANEA or FGC is provided with either Type B or Type C Transmission Specifications as follows:

- When routed directly to the end office either Type B or Type C is provided.

- When routed to an access tandem only Type B is provided.

- Type B or Type C is provided on the transmission path from the access tandem to the end office.

(This page filed under Transmittal No. 1)

6. Switched Access Service (Cont'd)

6.2 Provision and description of Switched Access Service (Cont'd)

6.2.3 Access Trunk Arrangement Non Equal Access (ATANEA) and Feature Group C (FGC) (Cont'd)

(C) Transmission Specifications (Cont'd)

Type C Transmission Specifications are provided with Interface Group 1 when routed directly to an end office. Type B is provided with Interface Groups 2 through 10, whether routed directly to an end office or to an access tandem.

Type DB Data Transmission Parameters are provided with ATANEA or FGC for the transmission path between the customer's premises and the end office when directly routed to the end office, and Type DB Data Transmission Parameters are provided for the transmission path between the customer's premises and the access tandem and between the access tandem and the end office when routed via an access tandem.

(D) Testing capabilities

ATANEA or FGC is provided, in the terminating direction where equipment is available, with seven digit access to balance (100 type) test line, milliwatt (102 type) test line, nonsynchronous or synchronous test line, automatic

6. Switched Access Service (Cont'd)

6.2 Provision and Description of Switched Access Service (Cont'd)

6.2.3 Access Trunk Arrangement Non Equal Access (ATANEA) and Feature Group C (Cont'd)

(D) Testing Capabilities (Cont'd)

transmission measuring (105 type) test line, data transmission (107 type) test line, loop around test line, short circuit test line and open circuit test line. In addition to the tests described in 6.1.5 preceding which are included with the installation of service and as ongoing routine testing, Additional Cooperative Acceptance Testing, Additional Automatic Testing and Additional Manual Testing are available as set forth in 13.3.5 following.

6.2.4 Access Trunk Arrangement 1OXXX (ATAXXX) and Feature Group D (FGD)

(A) Description

ATAXXX or FGD Access, which is available to all customers, provides trunk side access to Telephone Company end office switches with an associated uniform 1OXXX access code for the customer's use in originating and terminating communications. For FGD or ATAXXX with the CCSAC optional feature, out of band signaling is provided through Telephone Company designated STPS.

(1) ATAXXX or FGD is provided at Telephone Company designated electronic end office switches whether routed directly or via Telephone Company designated electronic access tandem switches.

(2) ATAXXX or FGD is provided as trunk side switching through the use of end office or access tandem switch trunk equipment. The switch trunk equipment is provided with wink start start-pulsing signals and answer and disconnect supervisory signaling, or without signaling when the CCSAC optional feature is specified.

6. Switched Access Service (Cont'd)

6.2 Provision and Description of Switched Access Service (Cont'd)

6.2.4 Access Trunk Arrangement 1OXXX (ATAXXX) and Feature Group D (FGD) (Cont'd)

(A) Description (Cont'd)

(3) ATAXXX or FGD switching is provided with multifrequency address or SS7 signaling. Up to 12 digits of the called party number dialed by the customer's end user using dual tone multifrequency or dial pulse address signals will be provided by Telephone Company equipment to the customer's premises where the Switched Access Service terminates. Such address signals will be subject to the ordinary transmission capabilities of the Switched Transport provided.

(4) ATAXXX or FGD switching, when used in the terminating direction, may be used to access valid NXXs in the LATA, time or weather announcement services of the Telephone Company, community information services of an information service provider, and other customers' services (by dialing the appropriate codes) when such services can be reached using valid NXX codes. When directly routed to an end office, only those valid NXX codes served by that office may be accessed. When routed through an access tandem, only those valid NXX codes served by end offices subtending the access tandem may be accessed. The customer will also be billed additional non-access charges for calls to certain community information services, for which rates are applicable under Telephone Company exchange service tariffs, e.g., 976 (DIAL-IT) Network Service. Additionally, non-access charges will also be billed for calls from a ATAXXX or FGD trunk to another customer's service in accordance with that customer's applicable service rates when the Telephone Company performs the billing function for that customer.

6. Switched Access Service (Cont'd)

6.2 Provision and Description of Switched Access Service (Cont'd)

6.2.4 Access Trunk Arrangement 1OXXX (ATAXXX) and Feature Group D (FGD) (Cont'd)

(A) Description (Cont'd)

(4) (Cont'd)

Calls in the terminating direction will not be completed to 950-0XXX or 950-1XXX access codes, Directory Assistance (411 and 555-1212), service codes 611 and 911 and 10XXX access codes. Calls will be completed to Directory Assistance (NPA-555-1212 or 555-1212) when ATAXXX or FGD switching is combined with Directory Assistance switching. the combination of ATAXXX or FGD Switched Access Service with DA Service is provided as set forth in 9. following. ATAXXX or FGD may not be switched, in the terminating direction, to Switched Access Trunk Arrangements 950, NEA, or XXX or to Switched Access Service Feature Groups B, C or D.

(5) The Telephone Company will establish a trunk group or groups for the customer at end office switches or access tandem switches where ATAXXX or FGD switching is provided. When required by technical limitations, a separate trunk group will be established for each type of ATAXXX or FGD switching arrangement provided. Different types of ATAXXX or FGD or other switching arrangements may be combined in a single trunk group at the option of the Telephone Company.

6. Switched Access Service (Cont'd)

6.2 Provision and Description of Switched Access Service (Cont'd)

6.2.4 Access Trunk Arrangement 10XXX (ATAXXX) and Feature Group D (FGD) (Cont'd)

(A) Description (Cont'd)

(6) The access code for ATAXXX or FGD switching is a uniform access code of the form 10XXX. A single access code will be the assigned number of all ATAXXX or FGD access provided to the customer by the Telephone Company. No access code is required for calls to a customer over ATAXXX or FGD Switched Access Service if the end user's telephone exchange service is arranged for presubscription to that customer, as set forth in 13.3.3 following.

Where no access code is required, the number dialed by the customer's end user shall be a seven or ten digit number for calls in the North American Numbering Plan (NANP). For international calls outside the NANP, a seven to twelve digit number may be dialed. The form of the numbers dialed by the customer's end user is NXX-XXXX, 0 or 1 + NXX-XXXX, NPA + NXX-XXXX, 0 or 1 + NPA + NXX-XXXX, and, when the end office is equipped for International Direct Distance Dialing (IDDD), 01 + CC + NN or 0ll + CC + NN.

When the 10XXX access code is used, ATAXXX or FGD switching also provides for dialing the digit 0 for access to the customer's operator, 911 for access to the Telephone Company's emergency reporting service, or the end-of-dialing digit (#) for cut-through access to the customer's premises.

6. Switched Access Service (Cont'd)

6.2 Provision and Description of Switched Access Service (Cont'd)

6.2.4 Access Trunk Arrangement 101XXXX (ATAXXXX) and Feature Group D (FGD) (Cont'd)

(A) Description (Cont'd)

(7) ATAXXXX or FGD switching will be arranged to accept calls from telephone exchange service locations without the need for dialing 101XXXX uniform access code. Each telephone exchange service line may be marked with a presubscription code to identify which 101XXXX code its calls will be directed to for interLATA service. Presubscription codes are applied as set forth in 13. following.

(8) When the 101XXXX 1+ or 011+ Sent-Paid access code is dialed from a Telephone Company pay telephone to a customer that has not ordered per 6.3.2(B) or (C) following, the calls will be routed to a telephone company recording.

(9) At the option of the customer, the Tandem Signaling optional feature as described in 6.1.2(A) (6) (f) preceding, is available for use on one-way originating feature group D trunks provisioned from an equal access end office to a customer’s point of termination.

(This page filed under Transmittal No. 1)

6. Switched Access Service (Cont'd)

6.2 Provision and Description of Switched Access Service (Cont'd)

6.2.4 Access Trunk Arrangement 10XXXX (ATAXXXX) and Feature Group D (FGD) (Cont'd)

(B) Optional Features

(1) Common Switching Optional Features

(a) Automatic Number Identification (ANI)*
(b) Service Class Routing
(c) Alternate Traffic Routing
(d) Call Gapping Arrangement
(e) Trunk Access Limitation
(f) International Carrier Option
(g) End Office End User Line Service Screening for Use with ATS Access Line Service.
(h) Hunt Group Arrangement for Use with WATS Access Line Service
(i) Uniform Call Distribution Arrangement for Use with WATS Access Line Service
(j) Nonhunting Number for Use with Hunt Group Arrangement or Uniform Call Distribution. Arrangement for Use with WATS Access Line Service
(k) Band Advance Arrangement for Use with WATS Access Line Service
(l) Cut-through
(m) Calling Party Number (CPN)**
(n) Charge Number (CN)
(o) Carrier Selection Parameter (CSP)
(p) Access Transport Parameter (ATP)***

* For ATAXXXX customers (a) will be ordered under 6.8.2 Common Switching Optional Features and BSEs.

** CPN is only available on trunks equipped with CN.

*** ATP is only available on trunks equipped with 64CCC.

6. Switched Access Service (Cont'd)

6.2 Provision and Description of Switched Access Service (Cont'd)

6.2.4 Access Trunk Arrangement 10XXX (ATAXXX) and Feature Group) D (FGD) (Cont'd)

(B) Optional Features (Cont'd)

(2) Transport Termination Optional Features

(a) Operator Trunk, Full Feature Arrangement

(3) Switched Transport Optional Features

(a) Supervisory Signaling (as set forth in 6.1.2(A) (2) (d) preceding)

(b) Common Channel Signaling Access Capability (CCSAC) as set forth in 6.1.2(A)(2)(d) preceding.

(c) 64 Clear Channel Capability (64CCC)(as set forth in 6.1.2.(A)(2)(e) preceding.)

(4) WATS Access Line Termination Optional Features

(a) E & M Supervisory Signaling
(b) Dialed Number Identification Service

(5) Tandem Signaling Optional Feature

(a) CIC and OZZ (as set forth in 6.1.2(A)(6)(f) preceding.

(b) TNS (as set forth in 6.1.2(A)(6)(f) preceding.

(C) Transmission Specifications

ATAXXX or FGD is provided with either Type A, Type B or Type C Transmission Specifications as follows:

When routed directly to the end office either Type B or C is provided.

When routed to an access tandem only Type A is provided.

Type A is provided on the transmission path from the access tandem to the end office.

(This page filed under Transmittal No. 1)

6. Switched Access Service (Cont'd)

6.2 Provision and Description of Switched Access Service (Cont'd)

6.2.4 Access Trunk Arrangement 10XXX (ATAXXX) and Feature Group) D (FGD) (Cont'd)

(C) Transmission Specifications (Cont'd)

Type C Transmission Specifications are provided with Interface Group 1. Type A and Type B Transmission Specifications are provided with Interface Groups 2 through 10.

Type DA Data Transmission Parameters are provided for the transmission path between the customer's premises and the access tandem and between the access tandem and the end office. Type DB Data Transmission Parameters are provided with ATAXKX or FGD for the transmission path between the customer's premises and the end office when directly routed to the end office.

Transmission specifications for the DNAL BSA are set forth in Technical Reference TR-NPL-000335.

(D) Testing Capabilities

ATAXXX or FGD is provided, in the terminating direction where equipment is available, with seven digit access to balance (100 type) test line, milliwatt (102 type) test line, nonsynchronous or synchronous test line, automatic transmission measuring (105 type) test line, data transmission (107 type) test line, loop around test line, short circuit test line and open circuit test line. In addition to the tests described in 6.1.5 preceding, which are included with the installation of service and as ongoing routine testing, Additional Cooperative Acceptance Testing, Additional Automatic Testing and Additional Manual Testing, are available as set forth in 13.3.5 following.

6. Switched Access Service (Cont'd)

6.2 Provision and Description of Switched Access Service (Cont'd)

6.2.5 500, 900 and Toll Free Access Service

(A) 500 Access Service

500 Access Service is an originating offering utilizing trunk side Switched Access Service and is available at appropriately equipped Telephone Company end offices or tandem switches. The service provides a 500 Access Service customer identification function based on the dialed 500 number.

When a 0+500+NXX-XXXX or 1+500+NXX-XXXX call is originated by an end user, the Telephone Company will perform the 500 Access Service customer identification function based on the dialed digits to determine the customer location to which the call is to be routed. If the call originates from an end office switch not equipped to provide the 500 Access Service customer identification function, the call will be routed to an office at which the function is available. Once 500 Access Service customer identification has been established, the call will be routed to the customer. Calls originating in an end office switch in which the customer has not ordered 500 Access Service will be routed to intercept. The 500 Access Service customer has the option to order 0+ 500, 1+ 500 or both. 0+ 500 and 1+ 500 originating calls from 101XXXX, inmate service, toll restricted lines, WATS, Feature Group A and Access Line Arrangement with Call Access Denial will be blocked. 1+500 originating calls from Coin, Prepay, Hotel/Motel ANI 7, Hospital and AT&T Public Access Line will be blocked. If the 500 Access Service customer chooses not to accept a call that the Telephone Company routes, then the 500 Access Service customer is responsible for providing its own blocking and announcement explaining the reason the call cannot be completed. If the 500 Access Service customer accepts 500 calls and subsequently cannot collect from the calling or called party, the Telephone Company is not responsible for the uncollected charges. Calls to 0- will reach a live operator intercept who will give dialing instructions to the calling party to dial 1+ 500 or 0+ 500. International dialing (e.g., 01 and 011+500+NXX-XXXX) will not be accepted for reaching a 500 access service customer.

6. Switched Access Service (Cont'd)

6.2 Provision and Description of Switched Access Service (Cont'd)

6.2.5 500, 900 and Toll Free Access Service (Cont'd)

(A) 500 Access Service (Cont'd)

When 500 Access Service is provided from an end office equipped with equal access capabilities, all such service will be provisioned in accordance with the technical characteristics available with Feature Group D and ATAXXX.

When 500 Access Service is provided from an end office not equipped with equal access capabilities, such service will be provisioned in accordance with the technical characteristics of ATANEA, ATAXXX, or Feature Group C or D.

500 Access Service originating from equal access end offices with the calling party's identification will be provided using access signaling with overlap outpulsing and ten-digit ANI, or with SS7 out of band signaling when the customer has ordered the CCSAC optional feature with Feature Group D or ATAXXX.

500 Access Service originating from a non-equal access end office or handicapped sources routed via operator switched without complete end user identification will be provided using traditional signaling. 500 Access Service traffic will be combined in the same trunk group arrangement with other 500 and non-500 Access Service trafffic unless the customer orders a separate trunk group only for its 500 Access traffic. The customer can obtain a separate trunk group using traditional signaling at the access tandem.

500 Access Service usage measurement shall be in accordance with the regulations set forth in 6.7.6 following for Feature Group D and ATAXXX.

6. Switched Access Service (Cont'd)

6.2 Provision and Description of Switched Access Service (Cont'd)

6.2.5 500, 900 and Toll Free Access Service (Cont'd)

(B) 900 Access Service

900 Access Service is an originating offering utilizing trunk side Switched Access Service or Access Trunk Arrangement. The service provides a customer identification function based on the dialed 900 number at Telephone Company appropriately equipped end offices or tandem switches.

When a 1+900+NXX-XXXX or 0+900+NXX-XXXX call is originated by an end user, the Telephone Company will perform the customer identification function based on the dialed digits to determine the customer location to which the call is to be routed. If the call originates from an end office switch not equipped to provide the customer identification function, the call will be routed to an office at which the function is available. Once customer identification has been established, the call will be routed to the customer. 900 Access Service must be provided from all equal access end offices subtending a tandem. Calls originating in an end office switch in which the customer has not ordered 900 Access Service will be routed to intercept. 900 calls from COIN, 0+, 0-, 101XXXX inmate service, hotel motel and calling card will be blocked. The customer may request via an ASR to the Telephone Company, unblocking of 0+ and 0- 900 calling on all classes of service except inmate.

When 900 Access Service is provided from an end office equipped with equal access capabilities, all such service will be provisioned in accordance with the technical characteristics available with ATAXXXX or Feature Group D.

When 900 Access Service is provided from an end office not equipped with equal access capabilities, such service will be provisioned in accordance with the technical characteristics of ATANEA or ATAXXXX or Feature Group C or D.

6. Switched Access Service (Cont'd)

6.2 Provision and Description of Switched Access Service (Cont'd)

6.2.5 500, 900 and Toll Free Access Service (Cont'd)

(B) 900 Access Service (Cont'd)

900 Access Service originating from equal access end offices with the customer identification function will be provided using exchange access signaling. 900 Access Service originating from end offices not having equal access capability, will be provided using conventional signaling. On traffic using conventional signaling, other than ATANEA or FGC, the customer's facilities shall provide off-hook or answer supervision when the called party answers.

900 Access Service usage measurement shall be in accordance with the regulations set forth in 6.7.6 following for ATANEA, ATAXXX or for Feature Groups C or D.

The Telephone Company will work cooperatively with the customer to implement any network management controls (e.g. call gapping and code blocking) to protect the network from traffic surges due to peaked 900 Access Services. Customer notification of peaked services is required as set forth in 6.6.1(D).

900 Access Service will be available in every LATA.

6. Switched Access Service (Cont'd)

6.2 Provision and Description of Switched Access Service (Cont'd)

6.2.5 500, 900 and Toll Free Access Service (Cont'd)

(C) Toll Free Access Service

Toll Free Access Service is an originating offering utilizing trunk side Switched Access Service or Access Trunk Arrangement. The basic service provides a customer identification function with Area of Service (AOS) routing, based on the dialed Toll Free number, at Telephone Company Toll Free Access Service Switching Points (SSPs). AOS routing is based on originating LATA, NPA, or NPA NXX.

When a Toll Free call is originated from an end user, the Toll Free call is held at the SSP while a query is launched to the Toll Free Service Control Point (SCP). The customer identification with AOS, in the form of SS7 signaling information is passed back from the SCP to the SSP from which the query originated and the call can then be routed to the correct customer location. If the call originates from an end office not equipped to provide the customer identification function, the call will be routed to the SSP equipped Telephone Company access tandem. (SSP Telephone Company equipped central offices are identified in NECA FCC No. 4.) Once customer identification has been established, the call will be routed to the customer for completion. Calls originating from a service area in which the customer has not ordered Toll Free Access Service will be routed to intercept. *

At the option of the customer, the Tandem Signaling optional feature as described in 6.1.2(A)(6)(f) preceding, is available on Toll Free Access Service only in a customer's end office which is also a SSP.

Customers may choose various vertical options in addition to the basic query as described in (1) following.

When Toll Free Access Service is provided from an end office equipped with equal access capabilities, all such service will be provisioned in accordance with the technical characteristics available with ATAXXX or FGD, and will be provided using exchange access signaling.

* Customer identification for Canadian and Caribbean Toll Free numbers will be performed by Six Digit Master List Turnaround.

6. Switched Access Service (Cont'd)

6.2 Provision and Description of Switched Access Service (Cont'd)

6.2.5 500, 900 and Toll Free Access Service (Cont'd)

(C) Toll Free Access Service

Toll Free Access Service measurement will be accordance with the regulations set forth in 6.7.6 following for ATAXXX or for Feature Group D. Toll Free Access Service will be available in every LATA.

Rates and charges associated with Toll Free Access Service Queries and vertical features are described in 6.7.1 following.

(1) Toll Free Access Service Basic Query and Vertical Features

(a) Basic Toll Free Access Service Query

The Basic Toll Free Access Service Query is provided via SSP equipped Telephone Company Central Offices to access the Toll Free Data Base which will provide customer specific identification of the dialed Toll Free number, thus enabling call completion.

(b) Plain Old Telephone Service (POTS) Translation

The POTS Translation optional service may be ordered in conjunction with the Basic Toll Free Access Service Query and will provide the customer a POTS translation of the dialed Toll Free number.

(c) Multiple Destination Routing

The Multiple Destination Routing may be ordered in conjunction with the Basic Toll Free Access Service Query and allows either Toll Free turnaround or POTS translation with Time of Day, Day of Week, Date of Year and/or Per Cent Allocation of Traffic (calls) between subscriber terminations.

(d) Six Digit Master Number List Turnaround

The Six Digit Master Number List Turnaround uses database access for routing six digit Canadian, Caribbean, or special codes which are not part of number portability.

6. Switched Access Service (Cont'd)

6.2 Provision and Description of Switched Access Service (Cont'd)

6.2.6 Network Access Services

(A) Dedicated Network Access Link (DNAL)

(1) Description

The Dedicated Network Access Link (DNAL) provides a dedicated analog data channel between the customer's designated premises and a Telephone company switch or central office for the control of features and functions. The DNAL is primarily used in conjunction with Switched Access or central office based services requiring a separate link for transmitting network signaling or control information. The Switched Access Basic Service Element (ESE) determines the requirement for speed, type and number of DNALS. The DNAL can only be used in conjunction with its respective BSE.

(a) Type 1 DNAL

This Dedicated Network Access Link passes signals which are used by a customer to busy out a predetermined group of lines or trunks. Type 1 DNAL may be ordered as a two- wire or four-wire analog interface and is used in conjunction with the Availability and Stop Hunting Control Arrangement as described in Sec 6.2.6 following. Technical Reference TR-NPL-000335 further defines Type 1 DNAL under Voice Grade 2.

6. Switched Access Service (Cont'd)

6.2 Provision and Description of Switched Access Service (Cont'd)

6.2.6 Network Access Services (Cont'd)

(A) Dedicated Network Access Link (DNAL) (Cont'd)

(1) Description (Cont'd)

(b) Type 2 DNAL

This Dedicated Network Access Link passes signals which are used to report the integrity of a customer's client's line when ordered in conjunction with Alarm Plus as described in Section 6.2.6 following. Technical Reference TR-NPL-000335 further defines Type 2 DNAL under Voice Grade 6.

(2) Optional Features

(a) Availability and Stop Hunting Control Arrangement (BSE)

Availability and Stop Hunting Control Arrangement provides the customer the ability to busy out a predetermined group of lines or trunks. This capability is activated by a customer provided key at the customer premises. The activation signal is transmitted to the Telephone Company's central office via a Type 1 Dedicated Network Access Link (DNAL) as specified in 6.2.6 preceding.

6. Switched Access Service (Cont'd)

6.2 Provision and Description of Switched Access Service (Cont'd)

6.2.6 Network Access Services (Cont'd)

(A) Dedicated Network Access Link (DNAL) (Cont'd)

(2) Optional Features (Cont'd)

(b) Port Access to Verify Integrity of Subscriber Lines (PAVISL) (BSE)

Port Access to Verity Integrity of Subscriber Lines provides the ability for a service provider to monitor the service provider's client's single party exchange access line. The service provider is connected to a telephone-company host computer via Type 2 DNAL. The host computer provides access to a scanning device which is used to repetitively poll the client's Subscriber Terminal Unit (STU). The STU is connected to alarm or monitoring sensors to detect a change in status of the client's exchange access line. The status of the client's exchange access line is then transmitted back to the host computer access port via the service provider's DNAL. The host computer port. access is limited on a first come first serve basis. Two ports are required. PAVISL is offered only where equipment and facilities are compatible and available. The service provider's client must also order the Telephone Company's local exchange service known as Alarm Plus.[sm]

(This page filed under Transmittal No. 1)

6. Switched Access Service (Cont'd)

6.3 Local Switching Optional Features

Following are descriptions of the various optional features that are available in lieu of, or in addition to, the standard features provided with the Feature Groups and Basic Service Arrangements. Some optional features may be non-chargeable when ordered with Feature groups and may be separately rated when ordered with Basic Service Arrangements.

6.3.1 Common Switching

(A) Call Denial on Line or Hunt Group (CAD)

This screening option limits terminating ALA or Feature Group A calls to completion within the LATA where the ALA or Feature Group A line resides. InterLATA and international calls are blocked as well as calls which may potentially terminate outside the LATA. Blocked calls are:

- Operator-handled calls (0-, 00-, 0+, 011+, 01+)
- Calls to 700 NPA codes
- Calls to 950 NXX codes
- Calls to the 900 NPA
- Calls to 976 NXX code
- Calls to 10XXX interLATA
- Calls to 959 NXX code
- Calls to 611 Repair Service
- Calls to 911 Emergency Service

The call denial option allows calls to terminate to any NXX within the LATA served by the ALA or FGA line that doesn't have a special charge associated with it, (exception: 411 or 555-1212). Calls are permitted to 411, 555-1212, 7DZUM, 800 and 7D/10D intraLATA toll.

Blocked calls are routed to a reorder tone or recorded announcement. This feature is provided in all Telephone Company electronic end offices, and where available, in electromechanical end offices. This option is available with Feature Group A or an Access Line Arrangement.

6. Switched Access Service (Cont'd)

6.3 Local Switching Optional Features (Cont'd)

6.3.1 Common Switching (Cont'd)

(B) Service Code Denial on Line or Hunt Group (SCD)

This screening option disallows completion of terminating AlA or Feature Group A calls to local directory assistance (411 and 555-1212), to service codes 611 and 911, and to.local operator assistance (0 and 00-). Blocked calls are routed to a reorder tone or recorded announcement. This feature is provided in all Telephone Company electronic end offices and, where available, in electromechanical end offices. This option is available with Feature Group A or an Access Line Arrangement.

(C) Multiline Hunt Group* or Hunt Group Arrangement HML/HTG)

This option provides the ability to sequentially access one of two or more line side connections in the originating direction, when the access code of the line group is dialed. This feature is provided in all Telephone Company end offices. It is available with an Access Line Arrangement or Feature Group A. ALA or FGA services with different methods of providing off-hook supervisory signalling cannot be mixed in the same hunt group arrangement. When ordered in conjunction with an ALA, this option is a chargeable Basic Service Element as set forth in 6.8.2 following.

* Multiline Hunt Group is the generic name of the ONA Service in Bell Operating Companies ONA Special Report #5.

(This page filed under Transmittal No. 1)

6. Switched Access Service (Cont'd)

6.3.1 Local Switching Optional Features (Cont'd)

6.3.1 Common Switching (Cont'd)

(D) Multiline Hunt Group-UCD Line Hunting* Uniform Call Distribution Arrangement (UCD)

This option provides a type of multiline hunting arrangement which provides for an even distribution of calls among the available lines in a hunt group. Where available, this feature is provided in Telephone Company electronic end offices only. It is available with Feature Group A or an Access Line Arrangement. *When ordered in conjunction with an ALA, this option is a chargeable Basic Service Element as set forth in 6.8.2 following.

(E) Multiline Hunt Group-Individual Access to Each Port in Hunt Group* Nonhunting Number for Use with Hunt Group or Uniform Call Distribution Arrangement (NHN)

This option provides an arrangement for an individual line within a multiline hunt or uniform call distribution group that provides access to that line within the hunt or uniform call distribution group when it is idle or provides busy tone when it is busy, when the nonhunting number is dialed. Where available, this feature is provided in Telephone Company electronic end offices only. It is available with Feature Group A or an Access Line Arrangement. *When ordered in conjunction with an AIA, this option is a Basic Service Element as set forth in 6.8.2. following.

* Multiline Hunt Group–UCD Line Hunting and Multiline Hunt Group–Individual Access to each port in hunt group are the generic name of the ONA service in Bell Operating Companies ONA Special Report #5.

(This page filed under Transmittal No. 1)

6. Switched Access Service (Cont'd)

6.3 Local Switching Optional Features (Cont'd)

6.3.1 Common Switching (Cont'd)

(F) Automatic Number Identification (ANI)

(1) This option provides the automatic transmission of a seven or ten digit number and information digits to the customer designated premises for calls originating in the LATA, to identify the calling station. The ANI feature is an end office software function which is associated on a call-by-call basis with

(a) all individual transmission paths in a trunk group routed directly between an end office and a customer designated premises or, where technically feasible, with

(b) all individual transmission paths in a trunk group between an end office and an access tandem, and a trunk group between an access tandem and a customer designated premises.

(2) The seven digit ANI telephone number is available with ATA950 and ATANEA or Feature Groups B and C. With these Access Arrangements or Feature Groups, technical limitations may exist in Telephone Company switching facilities which require ANI to be provided only on a directly trunked basis. ANI will be transmitted on all calls except those originating from multiparty lines and pay telephones using ATA950 or Feature Group B, or when an ANI failure has occurred.

6. Switched Access Service (Cont'd)

6.3 Local Switching Optional Features (Cont'd)

6.3.1 Common Switching (Cont'd)

(F) Automatic Number Identification (ANI) (Cont'd)

(3) The ten digit ANI Calling Billing Number Delivery - FGD Protocol* telephone number is only available with ATAXXX or ATAXXX with the CCSAC Optional Feature or Feature Group D. When the CCSAC optional feature is specified, the customer may obtain an ANI equivalent by ordering the Charge Number optional feature, as described in 6.3.1(Z), following. The ten digit ANI telephone number consists of the Numbering Plan Area (NPA) plus the seven digit ANI telephone number. The ten digit ANI telephone number will be transmitted on all calls except those identified as multiparty line or ANI failure, in which case only the NPA will be transmitted (in addition to the information digit described below). When ordered in conjunction with ATAXXX, this option is a chargeable Basic Service Element as set forth in 6.8.2 following.

(4) With ATANEA or Feature Group C, at the option of the customer, ANI may be ordered from end offices where Telephone Company recording for end user billing is not provided.

(5) ANI is not provided from end offices where the Telephone Company forwards ANI to its recording equipment. Where ANI cannot be provided, e.g., on calls from 4 and 8 party services, information digits will be provided to the customer.

The information digits identify:

(a) telephone number is the station billing number - no special treatment required,

*Calling Billing Number Delivery-FGD Protocol is the generic name of the ONA Service in Bell Operating Companies ONA Special Report #5.

(This page filed under Transmittal No. 1)

6. Switched Access Service (Cont'd)

6.3 Local Switching Optional Features (Cont'd)

6.3.1 Common Switching (Cont'd)

(F) Automatic Number Identification (ANI) (Cont'd)

(5) (Cont'd)

(b) multiparty line - telephone number is a 4- or 8-party line and cannot be identified number must be obtained via an operator or in some other manner,
(c) ANI failure has occurred in the end office switch which prevents identification of calling telephone number - must be obtained by operator or in some other manner,
(d) hotel motel originated call which requires room number identification,
(e) coinless station, hospital, inmate, etc. call which requires special screening or handling by the customer, and
(f) call is an Automatic Identified Outward Dialed (AIOD) call from customer premises equipment. The ANI telephone number is the listed telephone number of the customer and is not the telephone number of the calling party.

These ANI information digits are available with Feature Groups B, C, and D and Access Trunk Arrangements.

(This page filed under Transmittal No. 1)

6. Switched Access Service (Cont'd)

6.3 Local Switching Optional Features (Cont'd)

6.3.1 Common Switching (Cont'd)

(G) Up to 7 Digit Outpulsing of Access Digits to Customer (USDO)

This option provides for the end office capability of providing up to 7 digits of the uniform access code (950-0XXX, 950-lXXX) to the customer designated premises. The customer can request that only some of the digits in the access code be forwarded. The access code digits would be provided to the customer designated premises using multifrequency signaling, and transmission of the digits would precede the forwarding of ANI if that feature were provided. It is available with Feature Group B or ATA950.

(H) Cut-Through (CTO)

This option allows end users of the customer to reach the customer's premises by using the end of dialing digit (#). This option provides for connection of the call to the premises of the customer indicated by the 1OXXX code upon receipt of the end of dialing digit (#). The Telephone Company will not record any other dialed digits for these calls. This option is available with Feature Group D or ATAXXX.

6. Switched Access Service (Cont'd)

6.3 Local Switching Optional Features (Cont'd) (T)

6.3.1 Common Switching (Cont'd)

(I) Delay Dial Start-Pulsing Signaling (DDSP) (T)

This option provides a method of indicating to the near end trunk circuit readiness to accept address signaling information by the far end trunk circuit. Delay dial is often referred to as an off-hook, on-hook signaling sequence. The delay dial signal is the off-hook interval and the start-pulsing signal is the on-hook interval. With integrity check, the calling office will not outpulse until a delay dial (off-hook) signal followed by a start-pulsing (on-hook) signal has been identified at the calling office. This option is available with Feature Group C or ATANEA.

(J) Immediate Dial Pulse Address Signaling (ADS IDP)

This option provides for the forwarding of dial pulses from the Telephone Company end office to the customer without the need of a start-pulsing signal from the customer. It is available with Feature Group C or ATANEA.

(K) Dial Pulse Address Signaling (ADS DP)

This trunk side option provides for the transmission of number information, e.g., called number, between the end office switching system and -the customer designated premises (in either direction) by means of direct current pulses. It is available with Feature Group C or ATANEA.

(This page filed under Transmittal No. 4)

6. Switched Access Service (Cont'd)

6.3 Local Switching Optional Features (Cont'd)

6.3.1 Common Switching (Cont'd)

(L) Service Class Routing (SCRT)

This option provides the capability of directing originating traffic from an end office to a trunk group to a customer designated premises, based on the line class of service (e.g., coin, multiparty or hotel/motel), service prefix indicator (e.g., 0-, 0+, 01+ or 011+) or service access code (e.g., 500, 800 or 900). It is provided in suitably equipped end office or access tandem switches and is available with Feature Groups C and D or ATANEA and ATAXXX.

(M) Alternate Traffic Routing (ARTG)

(1) Multiple Customer Premises Alternate Routing

This option provides the capability of directing originating traffic from an end office (or appropriately equipped access tandem) to a trunk group (the "high usage" group) to a customer designated premises until that group is fully loaded, and then delivering additional originating traffic (the "overflowing" traffic) from the same end office or access tandem to a different trunk group (the "final" group) to a second customer designated premises. The customer shall specify the last trunk CCS desired for the high usage group. It is provided in suitably equipped end office or access tandem switches and is available with Feature Groups B, C and D and Access Trunk Arrangements.

(2) End Office Alternate Routing When Ordered in Trunks

This option provides an alternate routing arrangement for customers who order originating traffic in trunks and these trunks serve an end office via two routes: one route via an access

6. Switched Access Service (Cont'd)

6.3 Local Switching Optional Features (Cont'd)

6.3.1 Common Switching (Cont'd)

(M) Alternate Traffic Routing (ARTG) (Cont'd)

(2) End Office Alternate Routing When Ordered in Trunks (Cont'd)

tandem and one direct route. The feature allows the customer originating traffic from the end office to be offered first to the direct trunk group and then overflow to the access tandem group. It is provided in suitably equipped end offices and is available with Feature Groups B, C and D and Access Trunk Arrangements.

Alternate routing is not available with the Tandem Signaling optional feature as described in Section 6.1.2(A)(6)(f), preceding.

(N) Trunk Access Limitation (CHOK)

This option provides for the routing of originating 900 service calls to a specified number of transmission paths in a trunk group, in order to limit (choke) the completion of such traffic to the customer. Calls to the designated service which could not be completed over the subset of transmission paths in the trunk group, i.e., the choked calls, would be routed to reorder tone. It is provided in all Telephone Company electronic end offices and where available in electromechanical end offices. It is available with Feature Groups C and D or ATANEA and ATAXXX. Either Trunk Access Limitation, or Call Gapping Arrangement, 6.3.1(O), following, should be used with originating 900 Service where a concentrated high volume of 900 calling is expected. The Telephone Company will work cooperatively with the customer to determine when such options may be necessary.

6. Switched Access Service (Cont'd)

6.3 Local Switching Optional Features (Cont'd)

6.3.1 Common Switching (Cont'd)

(O) Call Gapping Arrangement (CGAP)

This option, provided in suitably equipped end office switches, provides for the routing of originating calls to 900 service to be switched in the end office to all transmission paths in a trunk group at a prescribed rate of flow, e.g., one call every five seconds, in order to limit (choke) the completion of such traffic to the customer. This option is activated at the request of the customer during normal business hours, i.e., 8:00 a.m. to 5:00 p.m. In addition, this option may be activated for no longer than a 24 hour period. Calls to the designated service which are denied access by this feature, i.e., the choked calls, would be routed to a no-circuit announcement. It is provided in selected ATAXXX or Feature Group D equipped end offices and is available only with ATAXXX or Feature Group D. Either Trunk Access Limitation, 6.3.1(N) preceding, or Call Gapping Arrangement should be used with originating 900 Service where a concentrated high volume of 900 calling is expected. The Telephone Company will work cooperatively with the customer to determine when such options may be necessary.

6. Switched Access Service (Cont'd)

6.3 Local Switching Optional Features (Cont'd)

6.3.1 Common Switching (Cont'd)

(P) International Carrier Option (INCO)

This option allows for ATAXXXX or Feature Group D end offices or access tandem switches equipped for International Direct Distance Dialing to be arranged to forward the international calls of one or more international carriers to the customer (i.e., the Telephone Company is able to route originating international calls to a customer other than the one designated by the end user either through presubscription or 101XXXX dialing). This arrangement requires provision of written verification to the Telephone Company that the customer is authorized to forward such calls. The written verification must be in the form of a letter of agency authorizing the customer to order the option on behalf of the international carrier. This option is only provided at Telephone Company end offices or access tandems equipped for International Direct Distance Dialing. It is available with Feature Group D or ATAXXXX.

(Q) Band Advance Arrangement for Use with WATS Access Line Service (BAAD)*

This option, which is provided in association with two or more Special Access Service groups, provides for the automatic overflow of terminating calls to a WATS Access Line Service group, when that group has exceeded its call capacity to another WATS Access Line Service group with a band designation equal to or greater than that of the overflowing WATS Access Line Service group. Band Advance will only be provided from one WATS Access Line Service group to another WATS Access Line Service group of the same IC. This arrangement does not provide for call overflow from a group with a higher band designation to one with a lower one. This option is available with Feature Groups A, B, C, D and all Access Line and Trunk Arrangements.

* This optional feature is not available with unbanded services such as UWAL.

(This page filed under Transmittal No. 1)

6. Switched Access Service (Cont'd)

6.3 Local Switching Optional Features (Cont'd)

6.3.1 Common Switching (Cont'd)

(R) End Office End User Line Service Screening for Use with Originating Only WATS Access Line Service (BAND)

This option provides the ability to verify that an end user has dialed a called party address (by screening the called NPA and or NXX on the basis of geographical bands selected by the Telephone Company) which is in accordance with that end user's service agreement with the customer, e.g., WATS. This option is provided in all Telephone Company electronic end offices and, where available, in electromechanical end offices in which WATS Access Line Service is provided. It is available with Feature Groups C and D or ATANEA and ATAXXX.

(S) Hunt Group Arrangement for Use with WATS Access Line Service (HML HTG)

This option provides the ability to sequentially access one of two or more WATS Access Line Services (e.g., 800 Service access lines) in the terminating direction, when the hunting number of the WATS Access line group is forwarded from the customer to the Telephone Company. This feature is provided in all Telephone Company end offices in which WATS Access Line Service is provided. It is available with Feature Groups A, B, C, D and all Access Line and Trunk Arrangements.

6. Switched Access Service (Cont'd)

6.3 Local Switching Optional Features (Cont'd)

6.3.1 Common Switching (Cont'd)

(T) Uniform Call Distribution Arrangement for Use with WATS Access Line Service (HYT UD)

This option provides a type of multiline hunting arrangement which provides for an even distribution of terminating calls among the available Special Access Services utilized in the provision of WATS or WATS-type Services in the hunt group. Where available, this feature is only provided in Telephone Company designated WATS Serving Offices. It is available with Feature Groups A, B, C, D and all Access Line and Trunk Arrangements.

(U) Nonhunting Number for Use with Hunt Group Arrangement or Uniform Call Distribution Arrangement for Use with WATS Access Line Service (NHN)

This option provides an arrangement for an individual Special Access Service utilized in the provision of WATS or WATS-type Services within a multiline hunt or uniform call distribution group that provides access to that Special Access Service within the hunt or uniform call distribution group when it is idle or provides busy tone when it is busy, when the nonhunting number is dialed. Where available, this feature is only provided in Telephone Company designated WATS Serving Offices. It is available with Feature Groups A, B, C, D and all Access Line and Trunk Arrangements.

(V) Flexible Automatic Number Identification

(1) This option is an enhancement to Automatic Number Identification (ANI) and facilitates information digits not available with ANI. The Flexible ANI feature allows the utility to associate new ANI information digit assignments with originating routing and screening translations as they are assigned by the North American Numbering Plan (NANP).

6. Switched Access Service (Cont'd)

6.3 Local Switching Optional Features (Cont'd)

6.3.1 Common Switching (Cont'd)

(V) Flexible Automatic Number Identification (Cont'd)

(2) Flexible ANI is only available on Feature Group D or ATAXXX, in equal access end offices where technically feasible, and will work in conjunction with ten digit ANI (as previously described in 6.3.1.F).

(3) When a customer orders Flexible ANI, all available ANI digits will be delivered. A customer may not specify individual digits.

The information digits identify:

(a) 52 - Outward Wide Area Telecommuncations Service (OUTWATS) routed via a combined WATS-POTS trunk group,

(b) 93 - Originating call is a private virtual network type of service call.

(W) Call Transfer*

This option permits a customer who has established a call using an Access Line Arrangement to add another party to the call to establish a three-way conference call. Once the three-way conference call has been established, the customer may drop its connection without disconnecting the other two parties and may use its service to make another call. In addition, a customer may hold a second call while maintaining privacy from the first call. This feature, available with ALA, is provided from suitably equipped Telephone Company offices.

*Call Transfer is also known as Three Way Call Transfer in Bell Operating Companies ONA Special Report #5.

(This page filed under Transmittal No. 1)

6. Switched Access Service (Cont'd)

6.3 Local Switching Optional Features (Cont'd)

6.3.1 Common Switching (Cont'd)

(X) Direct Inward Dialing (DID)

Direct Inward Dialing Service is offered with Access line Arrangement (ALA) only. Up to seven-digit outpulsing of the called telephone number is provided to the customer premises. The number of digits forwarded by the central office switch is determined at the time the service is ordered.

Due to the absence of central office switch measurement capabilities, assumed minutes of use as described in 6.7.6 (A) following are applied for lineside Basic Serving Arrangements (BSAs) used in conjunction with DID BSE.

Terminating service is not provided. Other Lineside BSA features or BSEs, except DID Trunk Queuing BSE are not available in conjunction with this BSE.

(Y) Calling Party Number (CPN)

This option provides for the automatic transmission of the calling party's ten-digit telephone number to the customer's premises for calls originating in the LATA. The ten-digit telephone number consists of the NPA plus the seven-digit telephone number, which may or may not be the same as the calling station's charge number. The ten digit telephone number will be coded as presented, or restricted via a "Privacy Indicator" for delivery to the called end user. The specific protocol for CPN is described in Bellcore Common Channel Signaling Network Specification Technical Reference TR-TSV-000905. This feature is available only with originating FGD or ATAXXX when the CCSAC optional feature is specified.

6. Switched Access Service (Cont'd)

6.3 Local Switching Optional Features (Cont'd)

6.3.1 Common Switching (Cont'd)

(Z) Charge Number (CN)

This option provides for the automatic transmission of the ten-digit billing number of the calling station and originating line information. The specific protocol for CN is described in Bellcore Common Channel Signaling Network Specification Technical Reference TR-TSV-000905. This feature is available with originating FGD when the CCSAC optional feature is specified. This feature is also available with originating FGD or ATAXXX when the CCSAC optional feature is specified as a chargeable Basic Service Element as described in 6.8.2(B) following. CN is the SS7 out of band signaling equivalent of ANI with multifrequency address signaling, as described in 6.3.1(F) preceding.

(AA) Carrier Selection Parameter (CSP)

This option provides for the automatic transmission of a signaling indicator which signifies to the customer whether the call being processed originated from a presubscribed end user of that customer. The specific protocol for CSP is described in Bellcore Common Channel Signaling Network Specification Technical Reference TR-TSV-000905. This feature is available only with originating FGD or ATAXXX when the CCSAC optional feature is specified.

(AB) Answer Supervision - Lineside BSE

Answer supervision - lineside provides the capability to deliver "off hook" supervisory signals from the terminating central office switch to a lineside interface at the originating central office switch. These signals indicate when the called station has answered an incoming call. Answer supervision will only be provided in RENONV02* on a trial basis for 18 months and is available with FGA or ALA service.

(This page filed under Transmittal No. 1)

6. Switched Access Service (Cont'd)

6.3 Local Switching Optional Features (Cont'd)

6.3.1 Common Switching (Cont'd)

(AC) Access Transport Parameter (ATP)

This option provides for the transmission of Integrated Services Digital Network (ISDN)/SS7 call set-up information from the originating Switch to the customer's premises and, on terminating access from the customer's premises to the terminating switch. This option is available only with FGD or ATAXXX with CCSAC where technical capabilities exist. The specific protocol for ATP is specified in technical reference TR-TSV-000962.

(This page filed under Transmittal No. 1)

6. Switched Access Service (Cont'd)

6.3 Local Switching Optional Features (Cont'd)

6.3.2 Transport Termination

(A) Rotary Dial Station Signaling

This option provides for the transmission of called party address signaling from rotary dial stations to the customer designated premises for originating calls. This option is provided in the form of a specific type of Transport Termination. It is available with Feature Group B or ATA950, only on a directly trunked basis.

(B) Operator Trunk - Modified Operator Service (MOS) - Coin, Non-Coin, or Combined Coin and Non-Coin

This option may be ordered to provide coin, non-coin, or combined coin and non-coin operation. It is available with ATANEA, ATAXXX, Feature Group C and D and is provided in electronic end offices and other Telephone Company end offices where equipment is available. It is provided as a trunk type of Transport Termination.

Coin:

This arrangement provides for initial coin return control and routing of 0+, 0-, 1+, 01+ or 011+ prefixed originating coin calls requiring operator assistance to the customer designated premises. Because operator assisted coin calling traffic is routed over a trunk group dedicated to operator assisted calls, this arrangement is only provided in association with the Service Class Routing option.

6. Switched Access Service (Cont'd)

6.3 Local Switching Optional Features (Cont'd)

6.3.2 Transport Termination (Cont'd)

(B) Operator Trunk - Modified Operator Service (MOS) - Coin, Non-Coin, or Combined Coin and Non-Coin (Cont'd)

The operator assistance coin calling arrangement is also normally ordered by the customer in conjunction with the ANI optional feature. The trunk groups equipped with this arrangement will be terminated at the customer's specific location.

Non-Coin:

This arrangement provides for the routing of 0+, 0-, 1+, 01+ or 011+ prefixed originating non-coin calls requiring operator assistance to the customer designated premises. Because operator assisted non-coin calling traffic is routed over a trunk group dedicated to operator assisted calls, this arrangement is only provided in association with the Service Class Routing option.

The operator assistance non-coin calling arrangement is also normally ordered by the customer in conjunction with the ANI optional feature. The trunk groups equipped with this arrangement will be terminated at the customer's specified location. When so equipped, the ANI feature provides for the forwarding

6. Switched Access Service (Cont'd)

6.3 Local Switching Optional Features (Cont'd)

6.3.2 Transport Termination (Cont'd)

(B) Operator Trunk - Modified Operator Service (MOS) Coin, Non-Coin, or Combined Coin and Non-Coin (Cont'd)

of information digits which identify that the call has originated from a hotel or motel, and whether room number identification is required, or that special screening is required, e.g., for coinless public stations, dormitory or inmate stations, or other screening arrangements agreed to between the customer and the Telephone Company.

Combined Coin and Non-Coin:

This arrangement provides for initial coin return control and routing of 0+, 0-, 1+, 01+ or 011+ prefixed originating operator assisted coin and non-coin calls requiring operator assistance to the customer designated premises. Because operator assisted coin and non-coin calling traffic is routed over a trunk group dedicated to operator assisted calls, this arrangement is only provided in association with the Service Class Routing option.

This arrangement is normally ordered by the customer in conjunction with the ANI optional feature. The trunk groups equipped with this arrangement will be terminated in the customer's specified location. When so equipped, the ANI optional feature provides for the forwarding of information digits which identify that the call has originated from a hotel or motel, and whether room number identification is required, or that special screening is required, e.g., for coinless pay telephones, dormitory or inmate stations, or other screening arrangements agreed to between the customer and the Telephone Company.

6. Switched Access Service (Cont'd)

6.3 Local Switching Optional Features (Cont'd)

6.3.2 Transport Termination (Cont'd)

(B) Operator Trunks - Modified Operator Services (MOS) - Coin, Non-Coin, or Combined Coin and Non-Coin (Cont'd)

This option provide the operator function available in the end office to the customer's specified location. These functions are (1) Operator Release, (2) Operator Attached, (3) Coin Collect, (4) Coin Return, (5) Ring Back. It is available from the Telephone Company's equal access end office to the customer's specified location. This option is not available in combination with the CCSAC optional feature.

(C) Operator Trunk - Exchange Access Operator Service Systems (EAOSS)

This option provides the operator functions available in the end office to the customer's specified location for Coin 1+, 01+, 011+, 0+ and 0-. These functions are (1) Operator Released, (2) Operator Attached, (3) Coin Collect, (4) Coin Return, and (5) Ringback. It is available with ATAXXX or Feature Group D and is provided as a trunk type of Transport Termination from the Telephone Company's coin tandem or direct from the equal access end office to the customer's specified location, where technically feasible.

6.3.3 WATS Access Line Termination

The WATS Access Line Termination are differentiated by line side vs. trunk side terminations. The standard WATS Access Line arrangement is available with a line side termination. There are various types of originating, terminating and two way line side terminations depending on the type of signaling associated with the WATS Access Line; (i.e., loop start or ground start). Line side terminations are available with either dial pulse or dual tone multifrequency address signaling.

(This page filed under Transmittal No. 1)

6. Switched Access Service (Cont'd)

6.3 Local Switching Optional Features (Cont'd)

6.3.3 WATS Access Line Termination

Available nonchargeable line sides and trunk side terminations can be found in Technical Reference TR-NPL-000334.

In addition, there are also various types of originating, terminating and two way WATS Access line trunk side terminations that are available in lieu of standard line side terminations. Trunk side terminations are provided only in association digital (i.e., DS1) WATS Access Line Service or with certain Line Termination optional features as specified following:

(A) Line Termination Optional Features for Trunk Side Connections

The Telephone Company will at the option of the customer, provide the following Line Termination optional features in association with WATS Access Lines Service.

(1) E&M Supervisory Signaling

The E&M Supervisory Signaling optional feature, which is available with four-wire originating, terminating and two way WATS Access Lines, provides for E&M Type 1, Type 2 or Type 3 Supervisory Signaling in lieu of loop start or ground start Supervisory Signaling.

Dialed Number Identification Services (DNIS)

The Dialed Number Identification Service optional feature, which is available with terminating only and two way WATS Access Lines, permits a customer's end

(This page filed under Transmittal No. 1)

6. Switched Access Service (Cont'd)

6.3 Local Switching Optional Features (Cont'd)

6.3.3 WATS Access Line Termination (Cont'd)

(A) Line Termination Optional Features for Trunk Side Connections (Cont'd)

(2) Dialed Number Identification Services (DNIS) (Cont'd)

user with multiple 800 Service telephone numbers in the same service group to identify the specific telephone number which was dialed by the calling party. Identification is accomplished by outpulsing four digits which distinguish the dialed 800 Service number to customer premises equipment at the end user's premises. The digits are outpulsed to the end user premises over the WATS Access Lines. All WATS Access Lines in the same service group must be equipped for DNIS. The number of dialable 800 Service telephone numbers accessing a service group equipped for DNIS cannot exceed the number of WATS Access Lines in the service group. DNIS is provided with either reverse battery or E&M type supervisory signaling as follows:

Reverse Battery:	Two-Wire, terminating only Four-Wire, terminating only
E&M:	Four-Wire, terminating only Four Wire, two way

(3) WATS Answer Supervision

The WATS Answer Supervision optional feature, which is available with originating only and two way WATS Access Lines, provides a signal to customer premises equipment at the end user premises that indicates that the called end user has answered, when such indication is provided by the interexchange carrier. Answer Supervision is provided with either reverse battery or E&M type supervisory signaling as follows:

6. Switched Access Service (Cont'd)

6.3 Local Switching Optional Features (Cont'd)

6.3.3 WATS Access Line Termination (Cont'd)

(3) WATS Answer Supervision (Cont'd)

Reverse Battery:	Two-Wire, originating only
E&M:	Four-Wire, originating only
	Four Wire, two way

(This page filed under Transmittal No. 1)

6. Switched Access Service (Cont'd)

6.4 Transmission Specifications

Each Switched Access Service transmission path is provided with standard transmission specifications. There are three different standard specifications (Types A, B and C). The standard for a particular transmission path is dependent on the Basic Service Arrangement or Feature Group, the Interface Group and whether the service is directly routed or via an access tandem. The available transmission specifications are set forth in 15.2.1 following. Data Transmission Parameters are also provided with each Switched Access Service transmission path. The Telephone Company will, upon notification by the customer that the data parameters set forth in 15.2.2(A), 15.2.2(B), or 15.2.2(C) are not being met, conduct tests independently or in cooperation with the customer, and take any necessary action to insure that the data parameters are met.

The Telephone Company will maintain existing transmission specifications on functioning service configurations installed prior to May 25, 1984 except that service configurations having performance specifications exceeding the standards listed in this provision will be maintained at performance levels specified in this tariff.

The transmission specifications concerning Switched Access Service are immediate action limits and are set forth in 15.2 following. Acceptance limits are set forth in Technical Reference TR-NPL-000334. This Technical Reference also provides the basis for determining Switched Access Service maintenance limits.

Transmission specifications for SS7 Signaling Connections are set forth in Bellcore Common Channel Signaling Network Specifications Technical Reference TR-TSV-000905.

Transmission specifications for FGD or ATAXXX with CCSAC and the 64CCC optional feature are set forth in Technical Reference TR-NWT-000938.

6. Switched Access Service (Cont'd)

6.5 Obligations of the Telephone Company

In addition to the obligations of the Telephone Company set forth in 2. preceding, the Telephone Company has certain other obligations pertaining only to the provision of Switched Access Service. These obligations are as follows:

6.5.1 Network Management

The Telephone Company will administer its network to insure the provision of acceptable service levels to all telecommunications users of the Telephone Company's network services. Generally, service levels are considered acceptable only when both end users and customers are able to establish connections with little or no delay encountered within the Telephone Company network. The Telephone Company maintains the right to apply protective controls, i.e., those actions, such as call gapping, which selectively cancel the completion of traffic, over any traffic carried over its network, including that associated with a customer's Switched Access Service. Generally, such protective measures would only be taken as a result of occurrences such as failure or overload of Telephone Company or customer facilities, natural disasters, mass calling or national security demands. In the event that the protective controls applied by the Telephone Company result in the complete loss of service by the customer, the customer will be granted a Credit Allowance for Service Interruption as set forth in 2.4.4(B)(3) preceding.

The Telephone Company SS7 signaling network will provide management functions as described in detail in Bellcore Common Channel Signaling Network Specifications Technical Reference TR-TSV-000905.

(This page filed under Transmittal No. 1)

6. Switched Access Service (Cont'd)

6.5 Obligations of the Telephone Company

6.5.2 Design and Traffic Routing of Switched Access Service

For ATANEA and ATAXXX or Feature Groups C and D, the Telephone Company shall design and determine the routing of Switched Access Service, including the selection of the first point of switching and the selection of facilities from the interface to any switching point and to the end offices where busy hour minutes of capacity are ordered. The Telephone Company shall also decide if capacity is to be provided by originating only, terminating only, or two-way trunk groups. Finally, the Telephone Company will decide whether trunk side access will be provided through the use of two-wire or four-wire trunk terminating equipment. Selection of facilities and equipment and traffic routing of the service are based on standard engineering methods, available facilities and equipment, and the Telephone Company traffic routing plans. If the customer desires routing or directionality different from that determined by the Telephone Company, the Telephone Company will work cooperatively with the customer in determining (1) whether the service is to be routed directly to an end office or through an access tandem switch and (2) the directionality of the service.

6. Switched Access Service (Cont'd)

6.5 Obligations of the Telephone Company (Cont'd)

6.5.2 Design and Traffic Routing of Switched Access Service (Cont'd)

For ALA and ATA950 or Feature Groups A and B, the line or trunk directionality and traffic routing of the Switched Access Service between the customer's premises and the entry switch are determined by the customer's order for service. Additionally, for ATA950 or Feature Group B the customer may order the optional feature Customer Specification of Local Transport Termination.

6.5.3 Provision of Service Performance Data

Subject to availability, end-to-end service performance data available to the Telephone Company through its own service evaluation routines, may also be made available to the customer based on previously arranged intervals and format. These data provide information on overall end-to-end call completion and non-completion performance, e.g., customer equipment blockage, failure results and transmission performance. These data do not include service performance data which are provided under other tariff sections, e.g., testing service results. If data are to be provided in other than paper format, the charges for such exchange will be determined on an individual case basis.

6.5.4 Trunk Group Measurement Reports

Subject to availability, the Telephone Company will make available trunk group data in the form of usage in CCS, peg count and overflow, to the customer based on previously agreed to intervals.

6. Switched Access Service (Cont'd)

6.5 Obligations of the Telephone Company (Cont'd)

6.5.5 Determination of Number of Transmission Paths

For ALA and ATA950 or Feature Groups A and B, which are ordered on a per line or per trunk basis respectively, the customer specifies the number of transmission paths in the order for service. For DNALs, the customer will specify the number of channels.

The Telephone Company will determine the number of Switched Access Service transmission paths to be provided for the ATANEA and ATAXXX or Switched Access Feature Group C and D busy hour minutes of capacity ordered. A transmission path is a communication path within the frequency bandwidth of approximately 300 to 3000 Hz or a derived communication path of a frequency bandwidth of approximately 300 Hz to 3000 Hz provided over a high frequency analog facility or a high speed digital facility between a customer's premises and a Telephone Company location. The number of transmission paths will be developed using the total busy hour minutes of capacity by type (as described in 6.1.1(E) preceding) for the end offices for each Basic Service Arrangement or Feature Group ordered from a customer's designated premises. The total busy hour minutes of capacity by type for the end office will be converted to transmission paths using standard Telephone Company traffic engineering methods. The number of transmission paths provided shall be the number required based on (1) the use of access tandem switches and end office switches, (2) the use of end office switches only, or (3) the use of tandem switches only.

6. Switched Access Service (Cont'd)

6.5 Obligations of the Telephone Company (Cont'd)

6.5.6 Determination of Number of End Office Transport Terminations

For analog entry switches, a termination will be provided for each transmission path provided. For digital entry switches, an equivalent termination will be provided for each transmission path provided.

6.5.7 Design Blocking Probability

The Telephone Company will cooperate in the design of the number of the facilities used in the provision of Switched Access Service. The Telephone Company will monitor the facilities used in the provision of Switch Access Services to meet the blocking probability criteria as set forth in (A) through (F) following.

(A) For ALA and ATA950 or Feature Groups A and B, and DNALs no design blocking criteria apply.

(B) For ATANEA or Feature Group C, the design blocking objective will be no greater than one percent (.01) between the point of termination at the customer's designated premises and the first point of switching when traffic is directly routed without an alternate route. Standard traffic engineering methods will be used by the Telephone Company to determine the number of transmission paths required to achieve this level of blocking.

(C) For ATAXXX or Feature Group D, the design blocking objective will be no greater than one percent (.01) between the point of termination at the customer's designated premises and the end office switch, whether the traffic is directly routed without an alternate route or routed

6. Switched Access Service (Cont'd)

6.5 Obligations of the Telephone Company (Cont'd)

6.5.7 Design Blocking Probability (Cont'd)

(C) (Cont'd)

via an access tandem. Standard traffic engineering methods as set forth in reference document Technical Reference PUB TREOP-000178 Trunk Traffic Engineering Concepts and Applications (Chapters 6-7) will be used by the Telephone company to determine the number of transmission paths required to achieve this level of blocking.

(D) For Entrance Facility no design blocking criteria apply. For Direct Trunked transport used in provision of ALA, ATA950 and Feature Groups A and B, no design blocking criteria apply. For Direct Trunked transport used in provision of ATAXXX and Feature Groups C and D, the design blocking objective is the same as for the ATAXXX or Feature Group C or D using the facility. For Tandem Switched Facility, the design blocking objective is the same as for the ALA, ATA or Feature Group using the facility.

(E) The design blocking criteria for 500,800 or 900 Access Service provided from an end office not equipped with equal access capabilities will be equivalent to that set forth preceding for ATANEA or Feature Group C except when more than one tandem is employed in the transport of a 500, 800 or 900 Access Service call. The design blocking criteria for 500, 800 or 900 Access Service provided from an end office equipped with equal access capabilities will be equivalent to that set forth preceding for ATAXXX or Feature Group D except when more than one tandem is employed in the transport of an 800 Access Service call. For 900 Access Service, where trunk access limitation as set forth in 6.3.1.(N) is applicable, design blocking criteria does not apply.

(This page filed under Transmittal No. 1)

6. Switched Access Service (Cont'd)

6.5 Obligations of the Telephone Company (Cont'd)

6.5.7 Design Blocking Probability (Cont'd)

(F) The Telephone Company will perform routine measurement functions except on ALA and ATA950 or Feature Groups A and B to assure that an adequate number of transmission paths are in service. The Telephone Company will recommend that additional capacity (i.e., trunks) be ordered by the customer when additional paths are required to reduce the measured blocking to the designed blocking level. For the capacity ordered, the design blocking objective is assumed to have been met if the routine measurements show that the measured blocking does not exceed the threshold listed in the following tables.

(1) For transmission paths carrying only first routed traffic direct between an end office and customer's designated premises without an alternate route, and for paths carrying only overflow traffic, the measured blocking thresholds are as follows:

Number of Transmission Paths Per Trunk Group	Measured Blocking Thresholds in the Time Consistent Busy Hour for the Number of Measurements Taken Between 8:00 a.m. and 11:00 p.m. Per Trunk Group			
	15-20 Measurements	11-14 Measurements	7-10 Measurements	3-6 Measurements
2	.070	.080	.090	.140
3	.050	.060	.070	.090
4	.050	.060	.070	.080
5-6	.040	.050	.060	.070
7 or more	.030	.035	.040	.060

(This page filed under Transmittal No. 1)

6. Switched Access Service (Cont'd)

6.5 Obligations of the Telephone Company (Cont'd)

6.5.7 Design Blocking Probability (Cont'd)

(F) (Cont'd)

(2) For transmission paths carrying first routed traffic between an end office and customer's premises via an access tandem, the measured blocking thresholds are as follows:

Number of Transmission Paths Per Trunk Group	Measured Blocking Thresholds in the Time Consistent Busy Hour for the Number of Measurements Taken Between 8:00 a.m. and 11:00 p.m. Per Trunk Group			
	15-20 Measurements	11-14 Measurements	7-10 Measurements	3-6 Measurements
2	.045	.055	.060	.095
3	.035	.040	.045	.060
4	.035	.040	.045	.055
5-6	.025	.035	.040	.045
7 or more	.020	.035	.030	.040

(This page filed under Transmittal No. 1)

6. Switched Access Service (Cont'd)

6.6 Obligations of the Customer

In addition to the obligations of the customer set forth in 2. preceding, the customer has certain specific obligations pertaining to the use of Switched Access Service. These obligations are as follows:

6.6.1 Report Requirements

Customers are responsible for providing the following reports to the Telephone Company, when applicable.

(A) Jurisdictional Reports

When a customer orders Switched Access Service for both interstate and intrastate use, the customer is responsible for providing reports as set forth in 2.3.14 preceding. Charges will be apportioned in accordance with those reports. The method to be used for determining the interstate charges is set forth in 2.3.15 preceding.

(B) Code Screening Reports

When a customer orders service class routing, trunk access limitation or call gapping arrangements, it must report the number of trunks and/or the appropriate codes to be instituted in each end office or access tandem switch, for each of the arrangements ordered.

(C) 900 Access Service Code Reports

When ordering 900 Access Service, the customer must report the appropriate NXX Codes to be instituted. The Telephone Company will activate code identification at all offices where capability is available. The report must be updated by the customer

6. Switched Access Service (Cont'd)

6.6.1 Report Requirements (Cont'd)

(C) 900 Access Service Code Reports (Cont'd)

each time a change is scheduled to occur, i.e., when a new code is to be added or an existing code is to be deleted. Such reports shall be provided according to negotiated service intervals in order to allow the Telephone Company sufficient time to implement the change.

(D) Substantial Call Volume 900 Services

When a customer offers services for which a substantial call volume is expected during a short period of time (e.g., media stimulated events) the customer must notify the Telephone Company at least 24 hours in advance of each peak period. For events scheduled during weekends or holidays, the Telephone Company must be notified no later than 5:00 p.m. local time the prior business day. Notification should include the nature, time, duration and frequency of the event, an estimated call volume, and the 900 NXX line number(s) to be used.

On the basis of the information provided, the Telephone Company will work cooperatively with the customer to implement network management controls if required to reduce the probability of excessive network congestion. The Telephone Company will also work cooperatively with the customer to determine the appropriate level of such control.

Failure to provide prescribed notification may result in customer caused network congestion, which could result in discontinuation of service under section 2.1.8 and/or damages under paragraph 2.1.3.

6. Switched Access Service (Cont'd)

6.6 Obligations of the Customer (Cont'd)

6.6.2 Supervisory Signaling

The customer's facilities shall provide the necessary on-hook, off-hook, answer and disconnect supervision.

6.6.3 CCSAC Measurement Data

The customer must provide the Telephone Company with the types of utilization, screening results and maintenance that are being made on SS7 Signaling Connections. The above information must be shared with the Telephone Company on an ongoing basis in order to provide capacity to transport and process interconnection traffic.

6.6.4 Trunk Group Measurement Reports

With the agreement of the customer, trunk group data in the form of usage in CCS, peg count and overflow for its end of all access trunk groups, were technologically feasible, will be made available to the Telephone Company. These data will be used to monitor trunk group utilization and service performance and will be based on previously arranged intervals and format.

6.6.5 Design of Switched Access Services

When a customer orders Switched Access Service, it is the customer's responsibility to assure that sufficient access services have been ordered to handle its traffic.

6. Switched Access Service (Cont'd)

6.7 Rate Regulations

This section contains the specific regulations governing the rates and charges that apply for Switched Access Service.

6.7.1 Description and Application of Rates and Charges

There are three types of rates and charges that apply to Switched Access Service. These are monthly recurring rates (including fixed and per mile rates), usage rates and nonrecurring charges. These rates and charges are applied differently to the various rate elements as set forth in (C), (D) and (E) following. (C

(A) Monthly Rates

Monthly rates (including fixed and per mile rates), are flat recurring rates that apply each month or fraction thereof that a specific rate element is provided. For billing purposes, each month is considered to have 30 days.

(B) Usage Rates

Usage rates (including fixed and per mile rates), are rates that apply only when a specific rate element is used. These are applied on a per call or per access minute basis. Calls or access minute charges are accumulated over a monthly period.

(C) Nonrecurring Charges

Nonrecurring charges are one-time charges that apply for a specific work activity (i.e., installation or change to an existing service). The types of nonrecurring charges that apply for Switched Access Service are: installation of service and service rearrangements.

6. Switched Access Service (Cont'd)

6.7 Rate Regulations (Cont'd)

6.7.1 Description and Application of Rates and Charges (Cont'd)

(C) Nonrecurring Charges (Cont'd)

(1) Installation of Service

Nonrecurring charges apply to each Switched Access Service installed. For Switched Access Service which is ordered on a per line or trunk basis, the charge is applied per line or trunk.

A DNAL channel termination charge, per point of termination, will apply to each DNAL ordered. In addition, nonrecurring charges apply per link when an SS7 Signaling Connection is installed for use with FGD or ATAXXX with the CCSAC optional feature.

(a) For an Entrance Facility which is ordered on a per transport channel basis, the charge is applied per transport channel.

(b) For Switched Access lines or trunks which traverse Direct Trunked Transport or Tandem Switched Transport, the nonrecurring charge is applied per transport channel transmission path.

For other optional features or Basic Service Elements, a nonrecurring charge applies per arrangement as shown in 6.8 following.

6. Switched Access Service (Cont'd)

6.7 Rate Regulations (Cont'd)

6.7.1 Description and Application of Rates and Charges (Cont'd)

(C) Nonrecurring Charges (Cont'd)

(2)

(3) Service Rearrangements

All changes to existing services other than changes involving administrative activities and the off-hook supervisory signaling of ALA or FGA Access Services, will be treated as a discontinuance of the existing service and an installation of a new service. The nonrecurring charge described in (1) preceding will apply for this work activity. Moves that change the physical location of the point of termination are described and charged for as set forth in 6.7.5 following.

- If, due to technical limitations of the Telephone Company, a customer could not combine its Interim 800 traffic with its other trunk Switched Access Services, no charge shall apply to combine these trunk groups when it becomes technically possible.

(This page filed under Transmittal No. 1)

6. Switched Access Service (Cont'd)

6.7 Rate Regulations (Cont'd)

6.7.1 Description and Application of Rates and Charges (Cont'd)

(C) Nonrecurring Charges (Cont'd)

(3) Service Rearrangements (Cont'd)

Administrative changes will be made without charge(s) to the customer. Administrative changes are as follows:

- Change of customer name,
- Change of customer or customer's end user premises address when the change of address is not a result of a physical relocation of equipment,
- Change in billing date (name, address, or contact name or telephone number),
- Change of agency authorization,
- Change of customer circuit identification,
- Change of billing account number,
- Change of customer test line number,
- Change of customer or customer's end user contact name or telephone number, and
- Change of jurisdiction.

Changes to the point in time when the off-hook supervisory signal is provided in the originating call sequence, i.e., when the off-hook supervisory signal is changed from being provided by the customer’s equipment before the called party answers to being forwarded by the customer’s equipment when the called party answers or vice versa, are subject to the nonrecurring charge as set forth in 5.2.2(A) preceding.

6. Switched Access Service (Cont'd)

6.7 Rate Regulations (Cont'd)

6.7.1 Description and Application of Rates and Charges (Cont'd)

(C) Nonrecurring Charges (Cont'd)

(3) Service Rearrangements (Cont'd)

For additions, changes or modifications to an optional feature which has a separate nonrecurring charge, that nonrecurring charge will apply.

For additions, changes, or modifications to optional features that do not have their own separate nonrecurring charges, a charge equal to one half the Switched Transport nonrecurring (i.e., installation) charge will apply. When an optional feature is not required on each transport channel, but rather for an entire transport channel group, an end office or an access tandem switch, only one such charge will apply (i.e., it will not apply per transmission path).

On existing Switched Access trunks, for a change of Switched Access signaling type from multifrequency address signaling to SS7 out of band signaling, i.e., the CCSAC optional feature, no charge will apply, provided there is no change in the physical serving arrangement. When the CCSAC optional feature is specified, the customer may add Calling Party Number (CPN), Charge Number (CN), and Carrier Selection Parameter (CSP) at no charge if these optional features are specified at the same time the CCSAC optional feature is ordered.

6. Switched Access Service (Cont'd)

6.7 Rate Regulations (Cont'd)

6.7.1 Description and Application of Rates and Charges (Cont'd)

(C) Nonrecurring Charges (Cont'd)

(3) Service Rearrangements (Cont'd)

When 64CCC is ordered on an existing FGD or ATAXXX trunk with CCSAC, the full nonrecurring charge described in (1) preceding will apply. The change will be treated as a discontinuance of the existing service and an installation of a new service and a new minimum period charge will apply as set forth in 6.7.3. The customer may order Access Transport Parameter (ATP) for no additional charge if ordered in conjunction with 64CCC.

Pursuant to the FCC Docket "In the Matter of Transport Rate Structure and Pricing (CC Docket No. 91-213)", Report and Order and Further Notice of Proposed Rulemaking, released October 16, 1992, Nevada Bell will waive certain nonrecurring charges for a period ending May 1, 1994, (or until a six month period following the implementation of the interim rate structure).

(This page filed under Transmittal No. 1)

6. Switched Access Service (Cont'd)

6.7 Rate Regulations (Cont'd)

6.7.1 Description and Application of Rates and Charges (Cont'd)

(C) Nonrecurring Charges (Cont'd)

(3) Service Rearrangements (Cont'd)

Additional trunks installed at the end office or tandem beyond those existing when the reconfiguration is ordered will be subject to full installation charges. The reconfiguration will be a Feature Group (FG) or Basic Service Arrangement Equivalency unless, due to Telephone Company facility limitation, equivalent FG or BSA cannot be provisioned.

6. Switched Access Service (Cont'd)

6.7 Rate Regulations (Cont'd)

6.7.1 Description and Application of Rates and Charges (Cont'd)

(D) Application of Rates

The following paragraphs set forth the Switched Access Service rate elements and how the rates are applied for the elements.

(1) Entrance Facilities

The Entrance Facility includes the charge for transport from a customer's serving wire center to the customer's premises. The rate is applied for a Voice Grade, DS1 and DS3 Transport Channel on a point of termination per month basis. The rate as set forth in 6.8.1(A) following applies for the selected Transport Channel per point of termination even if all the transmission paths on the selected Transport Channel are not activated. The DS3 Entrance Facility requires DS3 to DS1 multiplexing as set forth in 6.7.1(D)(5) following. Additionally, DS1 to DS0 multiplexing chargeable optional feature is available as set forth in 6.7.1(D)(5) following.

6. Switched Access Service (Cont'd)

6.7 Rate Regulations (Cont'd)

6.7.1 Description and Application of Rates and Charges (Cont'd)

(D) Application of Rates (Cont'd)

(2) Direct Trunked Transport

Direct Trunked Transport includes the charge for transport from a customer's serving wire center to an end office for switching of a customer's originating and terminating traffic, a hub location for multiplexing or an Access Tandem for interconnection to Tandem Switched Transport to an end office(s). The rates are applied for a Voice Grade, DS1 and DS3 Transport Channel on a per month fixed and per month per mile basis. The mileage between the end office, hub or access tandem involved and the customer's serving wire center is determined as set forth in 6.7.11 following. The rates as set forth in 6.8.2(B) following apply for the selected Transport Channel even if all the transmission paths on the selected Transport Channel are not activated. DS3 Direct Trunked Transport requires DS3 to DS1 multiplexing as set forth in 6.7.1(D)(5) following. Additionally, a DS1 to DS0 multiplexing chargeable optional feature is available as set forth in 6.7.1(D)(5) following.

(3) Tandem Switched Transport

Tandem Switched Transport includes charges for transport from end offices to the access tandem and for Tandem Switching at the access tandem.

(a) Tandem Switched Transport rates are applied on a per minute of use fixed and per minute of use per mile basis. The chargeable minutes of use for determining the charges are the minutes that are carried over the involved Tandem Switched Transport facilities. The mileage between the end office involved and the access tandem is determined as set forth in 6.7.11 following. The rates are as set forth in 6.8.1(C) following.

6. Switched Access Service (Cont'd)

6.7 Rate Regulations (Cont'd)

6.7.1 Description and Application of Rates and Charges (Cont'd)

(D) Application of Rates (Cont'd)

(3) Tandem Switched Transport (Cont'd)

(b) Tandem Switching rates are applied on a per minute of use basis. The chargeable minutes of use for determining the charges are the minutes that are carried over the involved Tandem Switched Transport facilities. The chargeable minutes are determined as set forth 6.7.6 following. The rates are as set forth in 6.8.1(C) following.

(c) Host Remote Transmission rates are applied on a per access minutes of use and a per access minutes of use per mile basis. These rates also apply to Common Transport facilities that are provided for the common use of all customers but which are not switched through an access tandem.

Host Remote Transmission may be associated with both tandem routed services and direct routed services such as when Tandem-Switched Transport is ordered to a host office to access remotes. Mileage is always measured separately from Tandem-Switched Transmission and Direct-Trunked Transport.

Mileage measure is described in 6.7.11.

(d) Tandem End Office Multiplexing

Rates are applied on a per minute of use basis for the use of the multiplexing equipment on the end office side of the access tandem.

(e) Dedicated Tandem Trunk Port

Rates are applied on a monthly per port basis, for each dedicated trunk on the serving wire center side of the access tandem.

(This page filed under Transmittal No. 1)

6. Switched Access Service (Cont'd)

6.7 Rate Regulations (Cont'd)

6.7.1 Description and Application of Rates and Charges (Cont'd)

(D) Application of Rates (Cont'd)

(4) Transport Interconnection Charge

The Transport Interconnection charge is divided into two subelements. The Transport Interconnection Charge per minute-of-use rates apply to all originating and terminating Switched Access minutes of use that utilize the Company's transport services. The Non-Facilities-Based Interconnection Charge will be assessed in lieu of the Interconnection Charge for all traffic which uses the Telephone Company's local switching services but does not use the Telephone Company's transport services. The Transport Interconnection Charge and Non-Facilities-Based Interconnection Charge premium and non-premium rates are assessed consistent with the application of premium and non-premium Local Switching rates.

Transport Interconnection Charge rates are applied to premium and non-premium rates minutes based upon whether the minutes are classified as originating or terminating. Originating calling permits the delivery of calls from Telephone Exchange service locations to the customer's premises. Terminating calling permits the delivery of calls from the customer's premises to Telephone Exchange service locations.

(1) Originating rates apply to:

- originating access minutes of use (excluding those to which terminating rates apply, as specified in (2) following;

- originating 500, 700, 800, 900 and access minutes of use which are reported as minutes that terminate over a Switched Access Service that is assessed terminating Carrier Common Line Access Charges. Such originating minutes must be reported as specified in 2.3.14(Jurisdictional Report).

(2) Terminating rates apply to:

- terminating access minutes of use;

- FGA and ATA originating access minutes of use;

- originating 500, 700, 800, 900 access minutes of use for calls on which Carrier Common line charges

(This page filed under Transmittal No. 1)

6. Switched Access Service (Cont'd)

6.7 Rate Regulations (Cont'd)

6.7.1 Description and Application of Rates and Charges (Cont'd)

(D) Application of Rates (Cont'd)

(4) Transport Interconnection Charge (Cont'd)

(2) (Cont'd)
are not billed on the terminating end. When an Expanded Interconnection arrangement, as set forth in Section 18, following, is provided and the customer requires DTT to an end office within the same wire center building, the IC rates are not assessed.

(5) Multiplexing
The Multiplexing rate applies when an Entrance Facility or Direct Trunked transport is multiplexed at a Telephone Company hub to a lower capacity (i.e., DS3 to DS1 or DS1 to DS0). DS3 to DS1 multiplexing is required on a DS1 Entrance Facility or Direct Trunked transport. The Multiplexing rate is applied on a per Multiplexing arrangement basis. The rate as set forth in 6.8.1(I) following applies for the selected Multiplexing arrangement even if all the Multiplexing ports for the selected Multiplexing arrangement are not activated.

(6) Local Switching

Local Switching includes usage charges and optional features charges. Local Switching usages rates are applied on a per minute of use basis. Local Switching minutes are as set forth in (E) following. The chargeable minutes are determined as set forth in 6.7.6 following. The rates are as set forth in 6.8.2 following.

The Dedicated End Office Port provides for each in service dedicated line or trunk terminating in the end office port. A monthly rate applies, per line or per trunk, for each dedicated line or trunk terminating in the end office port.

The Shared End Office Trunk Port rate element provides for the use of the shared end office trunk ports for termination of Tandem Switched Transport trunks for tandem routed traffic. A per minute of use charge applies to the Shared End Office Trunk Ports for termination of Tandem Switched transport trunks for tandem routed traffic.

Local Switching optional feature rates are applied on a per month and a per minute of use basis as set forth in 6.8.2 following.

6. Switched Access Service (Cont'd)

6.7 Rate Regulations (Cont'd)

6.7.1 Description and Applications of Rates and Charges (Cont'd)

(D) Application of Rates (Cont'd)

(7) Information Surcharge

Information Surcharge rates are applied on a per minutes of use basis. The Information Surcharge minutes are as set forth in (E) following. The chargeable minutes are determined as set forth in 6.7.6 following. The rates are as set forth in 6.8.3 following.

(8) Tandem Switched Transport with Direct Trunked Transport DS1 and DS3 Transport Channels

When Tandem Switched Transport is provided with Direct Trunked Transport DS1 and/or DS3 Transport Channels, the Direct Trunked Transport rates will be adjusted and the Tandem Switched Transport will be billed the per minutes of use fixed and per minutes of use per mile rates for all chargeable minutes as set forth in (3) preceding.

6. Switched Access Service (Cont'd)

6.7 Rate Regulations (Cont'd)

6.7.1 Description and Application of Rates and Charges (Cont'd)

(D) Application of Rates (Cont'd)

(9) Transport Application

An Entrance Facility or EISCT and Direct Trunked transport and Tandem Switched transport is required for all Switched Access Service except when the customer directs its Switched Access Service over another customer's facility as set forth in 6.1.2(A) preceding.

The customer must order Direct Trunked transport from the customer's serving wire center to an access tandem with Tandem Switched transport from the access tandem to the end office(s). The customer may order multiplexing associated with a DS3 or DS1 Entrance Facility or Direct Trunked transport in conjunction with the above.

6. Switched Access Service (Cont'd)

6.7 Rate Regulations (Cont'd)

6.7.1 Description and Application of Rates and Charges (Cont'd)

(D) Application of Rates (Cont'd)

(9) Transport Application (Cont'd)

For ALA and FGA Switched Access Service, the customer shall select the first point of switching and Direct Trunked Transport will be provided to the selected first point of switching. In the terminating direction of ALA and FGA, calls which terminate to end offices other than the first point of switching will be provided over Tandem Switched Transport from the first point of switching to the terminating end office. Tandem Switched Transport rates per minute of use fixed and per minute of use per mile will apply. Tandem Switched Transport minutes are as set forth in (E) following. The chargeable minutes of use for determining the charges are the minutes that are carried over the involved Tandem Switched transport facilities. The chargeable minutes are determined as set forth in 6.7.6 following. The mileage between the end office involved and the FGA first point of switching is determined as set forth in 6.7.11 following. Tandem Switching charges as set forth in 6.8.1(C)(2) following do not apply.

6. Switched Access Service (Cont'd)

6.7 Rate Regulations (Cont'd)

6.7.1 Description and Application of Rates and Charges (Cont'd)

(D) Application of Rates (Cont'd)

(10) DNAL Recurring Rates

(a) DNAL Termination

A monthly rate applies for each DNAL point of Termination requested by the customer.

(b) DNAL Mileage

A fixed monthly rate applies for each DNAL channel between the customer designated premises and the Telephone Company end office switch where the DNAL is terminated.

A monthly rate per mile applies to each airline mile between the serving wire center of the customer's designated premises and the Telephone Company end office switch where the BSE requiring the DNAL is provided. Airline mileage is calculated as set forth in 6.7.11.

(11) Direct Inward Dial (DID)

(a) DID Termination

A fixed monthly rate and a nonrecurring charge applies to each trunk terminating in the central office. Usage will be billed on assumed minutes of use per month.

6. Switched Access Service (Cont'd)

6.7 Rate Regulations (Cont'd)

6.7.1 Description and Application of Rates and Charges (Cont'd)

(D) Application of Rates (Cont'd)

(12) SS7 Interconnection

(a) SS7 Link

A fixed monthly rate applies for each STP Access connection between the Telephone Company STP Wire Center and the customer designated premises.

A monthly rate per mile applies to each airline mile between the Telephone Company STP Wire Center and the serving Wire Center of the customer designated premises.

A nonrecurring charge applies for each SS7 Link.

(b) STP Port

A fixed monthly charge applies per STP Port Termination installed at the Telephone Company STP Wire Center.

SS7 Interconnection rate elements are Local Transport monthly rated Switched Access Service rate elements and are not subject to the usage (i.e., Local Transport, Local Switching and Carrier Common Line) rate categories.

6. Switched Access Service (Cont'd)

6.7 Rate Regulations (Cont'd)

6.7.1 Description and Application of Rates and Charges (Cont'd)

(D) Application of Rates (Cont'd)

(13) Toll Free Access Service

The Basic Toll Free Access Query charge is assessed to the customer on a per query basis. Additional charges may apply to Toll Free Access Service Vertical Features. These charges are billed in addition to the basic query charge. The Six Digit Master Number List Turnaround charge is billed in lieu of the Basic Toll Free Access Query charge when customer identification is performed for Canadian and Caribbean Toll Free numbers. There are no vertical features associated with this function. These charges are described in 6.8.8 following.

(14) Bill Name and Address Service (BNA)

(a) The Telephone Company will, upon request, provide Billing Name and Address Service (BNA), associated with customers who have listed telephone numbers. The Billing Name and Address Service will be provided only when the customer, or the customer's billing agent needs the information to bill a call and the originating telephone number is provided. The customer or the customer's billing agent must subscribe to Automatic Number Identification (ANI) provided by the Telephone Company.

6. Switched Access Service (Cont'd)

6.7 Rate Regulations (Cont'd)

6.7.1 Description and Application of Rates and Charges (Cont'd)

(D) Application of Rates (Cont'd)

(14) Bill Name and Address Service (BNA) (Cont'd)

(b) A standard format for the receipt and provision of the listed, nonpublished and unlisted telephone number and billing name and address information will be established by the Telephone Company and provided to the customer. If in the course of Telephone Company business it is necessary to change the format, the Telephone Company will provide notification to the involved customers one month prior to the change. The Telephone Company will specify the location(s) where requests are to be received.

(c) The Telephone Company will receive from the customer/billing agent a magnetic tape which contains the originating telephone numbers obtained through Automatic Number Identification (ANI). The frequency for receipt of the customer/billing agent provided magnetic tapes will be at intervals mutually agreed upon between the Telephone Company and the customer. The customer/billing agent provided End User telephone numbers will programmatically be associated with the proper listed, nonpublished, or unlisted End User billing name and address contained in the CRIS file at that time. The information will then be provided back to the customer/billing agent as set forth in (d) following. The Telephone Company will determine the number of magnetic tapes required to provide the Billing Name and Address Service detail.

6. Switched Access Service (Cont'd)

6.7 Rate Regulations (Cont'd)

6.7.1 Description and Application of Rates and Charges (Cont'd)

(D) Application of Rates (Cont'd)

(14) Bill Name and Address Service (BNA) (Cont'd)

(d) Output magnetic tape(s) containing Billing Name and Address details will be provided to the customer/billing agent as part of Billing Name and Address Service. The magnetic tapes will be provided without the return of previously supplied customer provided tapes. The Telephone Company will supply the output magnetic tapes. Unless otherwise mutually agreed to by the Telephone Company and the customer/billing agent, the output magnetic tapes will be sent to the customer via U.S. Mail. However, the customer/billing agent may pick up the output magnetic tapes at a location designated by the Telephone Company or request that the detail on the magnetic tapes be data transmitted to the customer/billing agent. When the billing name and address details are data transmitted to a customer/billing agent location, program development charges to design, develop, test and maintain the necessary programs will apply as set forth in 6.8.9 and data transmission charges will be determined on an individual case basis. The time to implement programs for data transmission will be determined on an individual case basis. The data transmission hardware and software specifications will be mutually agreed upon by the Telephone Company and customer/billing agent.

6. Switched Access Service (Cont'd)

6.7 Rate Regulations (Cont'd)

6.7.1 Description and Application of Rates and Charges (Cont'd)

(D) Application of Rates (Cont'd)

(14) Bill Name and Address Service (BNA) (Cont'd)

(e) The Telephone Company will normally make available for mailing or pick-up the output magnetic tape six workdays after receipt of the customer/billing agent provided magnetic tape, or at an interval that is mutually agreed upon by the Telephone Company and the customer/billing agent. Availability may be delayed in the case of input data errors in the customer/billing agent provided magnetic tape.

(f) Billing Name and Address Service detail will not be retained by the Telephone Company for longer than 45 days. If the customer/billing agent requests that the initially provided output magnetic tape be made available again, such requests must be within 30 days from the date the first output magnetic tape was made available. Charges as set forth in 6.8.9 will apply.

(g) Any customer/billing agent purchasing output magnetic tapes pursuant to this tariff agrees to abide by all applicable Commission rules, decisions, orders, statutes and laws concerning the disclosure of published and nonpublished telephone numbers, and further agrees to use the information contained therein only for the purpose of billing by the end user for services provided to their end users.

(h) At the customer's/billing agent's request the Telephone Company may undertake the development of a program to satisfy a particular customer need. Program development charges would apply for such an undertaking.

6. Switched Access Service (Cont'd)

6.7 Rate Regulations (Cont'd)

6.7.1 Description and Application of Rates and Charges (Cont'd)

(D) Application of Rates (Cont'd)

(14) Bill Name and Address Service (BNA) Cont'd)

(i) In the event an End User Customer notifies the Telephone Company that their BNA is not to be released, that End User's LEC Card Calling Card will be cancelled and the user will be blocked from receiving 3rd number and collect calls.

6.7.2 Minimum Periods

Switched Access Service is provided for a minimum period of one month

6. Switched Access Service (Cont'd)

6.7 Rate Regulations (Cont'd)

6.7.3 Minimum Period Charge

The Minimum Period Charge applies when the customer requests disconnect of Switched Access Service prior to the expiration of the thirty day minimum period.

The Minimum Period Charge consists of the following:

(A) The Switched Transport Entrance Facility charges, Direct Trunked Transport charges, Switched Transport Multiplexor charges associated with Entrance Facility and Direct Trunked Transport, Optional Features per month charges.

(B) All usage sensitive rate elements, following, based on actual usage: Transport Interconnection Charge, Switched Transport Tandem Switched transport, Tandem Switching Information Surcharge, Local Switching, Toll Free Access Service, as set forth in 6.8 following.

(C) Nonrecurring charges associate with the establishment of service, as set forth 6.8 following.

6.7.4 Change of Basic Service Arrangement or Feature Group Type

Changes from one type of Basic Service Arrangement or feature group to another will be treated as discontinuance of one type of service and a start of another. Nonrecurring charges will apply, with three exceptions.

(1) When a customer upgrades an ALA, ATA950, Feature Group A or B service to an ATAXXX or Feature Group D service, or an ALA or Feature Group A service to an ATA950 or Feature Group B service, the nonrecurring charges will not apply if the following conditions are met:

(a) The same customer premises is maintained, and

(b) The disconnections of ALA or FGA service and the start of ATA950, ATAXXX, FGB or FGD service are within the same LATA; or the disconnections of ATA950 or FGB service and the start of ATAXXX or FGD service are within the same tandem subtending area.

(This page filed under Transmittal No. 1)

6. Switched Access Service (Cont'd)

6.7 Rate Regulations (Cont'd)

6.7.4 Change of Basic Service Arrangement or Feature Group Type (Cont'd)

(1) (Cont'd)

(c) The orders for the disconnect of the ALA or FGA service for the start of ATAXXX or FGD service are placed with the Telephone Company within 30 days of allocation of the most recent end office conversion to equal access in the LATA or the orders for the disconnect of the ATA950 or FGB service for the start of ATAXXX or FGD service are placed with the Telephone Company within 30 days of the allocation of the most recent end office conversion to equal access in the tandem subtending area or the orders for the disconnect of ALA or FGA service for the start of ATA950 or FGB service are placed with the Telephone Company within 30 days of the start of ATA950 or FGB service and

(d) The customer requests the same effective date for both the disconnect of service and start of service or

(e) The customer requests that the disconnect date on the ALA, ATA950, FGA or FGB service, for the start of ATAXXX or FGD service, be no more than 60 days after allocation. The customer requests the disconnect date of the ALA or FGA service for the start of ATA950 or FGB service be no more than 90 days after the start of the new ATA950 or FGB service.

(f) In the case of an ALA to ATA950; or FGA to FGB change; the ATA950 or FGB trunks that are requested are served from an access tandem.

(2) When an ATANEA or FGC service is upgraded to an ATAXXX or FGD service, the nonrecurring charge will not apply. Because ATANEA or FGC is no longer available in an end office once the end office is

(This page filed under Transmittal No. 1)

6. Switched Access Service (Cont'd)

6.7 Rate Regulations (Cont'd)

6.7.4 Change of Basic Service Arrangements or Feature Group Type (Cont'd)

(2) (Cont'd)

equipped with equal access capabilities, (i.e., ATAXXX or FGD), such upgrades will be performed by the Telephone Company without the customer being required to place an order for the change. When the effective dates for the

disconnect and start of ATAXXX or FGD service are the same, minimum period obligations will not change, (i.e., the time elapsed in the existing minimum period obligations will be credited to the minimum period obligations for ATAXXX or FGD or the new ATA950 or FGB). When the effective dates for the disconnect and start of service are different, new minimum period obligations will be established for the ATAXXX or FGD or the new ATA950 or FGB service. For all other changes from one type of Basic

Service Arrangement or Feature Group to another, new minimum period obligations will also be established.

(3) Nonrecurring charges will not apply to the conversion of existing Feature Groups to their unbundled BSA equivalents. However, during the transition period as set forth in Section 6.1 preceding, conversion from a BSA to its equivalent Feature Group will be treated as a discontinuance of the existing service and an installation of new service (nonrecurring charge will apply.) When a customer converts an existing Feature Group to its unbundled BSA equivalent, minimum period obligations will not change, i.e., the time elapsed in the existing minimum period obligations will be credited to the minimum period obligations for the BSA. For changes from a BSA to a Feature Group during the transition period as noted above, new minimum period obligations will be established.

(This page filed under Transmittal No. 1)

6. Switched Access Service (Cont'd)

6.7 Rate Regulations (Cont'd)

6.7.5 Moves

A move involves a change in the physical location of one of the following:

- The point of termination at the customer's premises
- The customer's premises

The charges for the move are dependent on whether the move is to a new location within the same building or to a different building.

(A) Moves Within the Same Building

When the move is to a new location within the same building, the charge for the move will be an amount equal to one half of the nonrecurring charge for the capacity affected. There will be no change in the minimum period requirements.

(B) Moves to a Different Building

Moves to a different building will be treated as a discontinuance and start of service and all associated nonrecurring charges will apply. New minimum period requirements will be established for the new service. The customer will also remain responsible for satisfying all outstanding minimum period charges for the discontinued service.

6.7.6 Measuring Access Minutes

Customer traffic to end offices will be measured (i.e., recorded or assumed) by the Telephone Company at end office switches or access tandem switches. Originating and terminating calls will be measured (i.e., recorded or assumed) by the Telephone Company to determine the basis for computing chargeable access minutes.

For Local Switching, Information Surcharge and Local Switching optional Features usage based charges for terminating calls over ALA, FGA, ATA950, FGB, FGC, 800, ATAXXX and FGD, and for originating calls over ALA or FGA where the off-hook supervisory signal is provided by the customer's equipment, FGB, ATA950, ATAXXX and FGD, the measured minutes are the chargeable access minutes. For Switched Transport Tandem Switched Transport and Tandem Switching usage based charge for terminating calls over ATA950, FGB, FGC, 800, ATAXXX and FGD, and for originating calls over FGB, ATA950, ATAXXX and FGD, the measured minutes carried over the involved Switched Transport Tandem Switched Transport are the chargeable access minutes.

(This page filed under Transmittal No. 1)

6. Switched Access Service (Cont'd)

6.7 Rate Regulations (Cont'd)

6.7.6 Measuring Access Minutes (Cont'd

For Local Switching, Information Surcharge and Local Switching Optional Features usage based charges for originating calls over ALA or FGA, FGC, ATAXXX and FGD with conventional signaling where the off-hook supervisory signal is forwarded by the customer's equipment when the called party answers, the chargeable access minutes are derived from recorded minutes in the following manner. Also when determining Switched Transport Tandem Switched Transport and Tandem Switching usage based charges for originating calls over FGD, ATAXXX and FGD with conventional signaling where the off-hook supervisory signal is forwarded by the customer's equipment when the called party answers, the chargeable access minutes are derived in the following manner from recorded minutes carried over the involved Switched Transport Tandem Switched Transport.

Step 1: Obtain recorded originating minutes and messages, measured as set forth in (C), (E) and (F) following for ALA or FGA, ATANEA or FGC and ATAXXX or FGD respectively, from the appropriate recording data.

Step 2: Obtain the total attempts by dividing the originating measured messages by the completion ratio. Completion ratios (CR) are obtained separately for the major call categories such as DDD, operator, 800, 900, directory assistance and international from a sample study which analyzes the ultimate completion status of the total attempts which receive acknowledgement from the customer. That is, Measured Messages divided by Completion Ratio equals Total Attempts.

Step 3: Obtain the total non-conversation time additive (NCTA) by multiplying the total attempts (obtained in Step 2) by the NCTA per attempt ratio. The NCTA per attempt ratio is obtained from the sample study identified in Step 2 by measuring the non-conversation time associated with both completed and incompletedy attempts. The total NCTA is the time on a completed attempt from customer

6. Switched Access Service (Cont'd)

6.7 Rate Regulations (Cont'd)

6.7.6 Measuring Access Minutes (Cont'd)

Step 3: (Cont'd)

acknowledgement of receipt of call to called party answer (set up and ringing) plus the time on an incompleted attempt from customer acknowledgment of call until the access tandem or end office receives a disconnect signal (ring - no answer, busy or network blockage). That is, Total Attempts times Non-Conversation Time per Attempt Ratio equals Total NCTA.

Step 4: Obtain total chargeable originating access minutes by adding the total NCTA (obtained in Step 3) to the recorded originating measured minutes (obtained in Step 1). That is, Measured Minutes plus NCTA equals Chargeable Originating Access Minutes.

Following is an example which illustrates how the chargeable originating access minutes are derived from the measured originating minutes using this formula.

Where: Measured Minutes (M. Min.) = 7,000
Measured Messages (M. Mes.) = 1,000
Completion Ratio (CR) = .75
NCTA per Attempt = .4

(1) Total Attempts = $\frac{1,000(\text{M. Mes.})}{.75\ (\text{CR})}$ = 1,333.3

(2) Total NCTA = .4 (NCTA per Attempt) x 1,333.33 = 533.33

(3) Total Chargeable Originating Access Minutes = 7,000(M. Min) + 533.33(NCTA) = 7,533.33

(This page filed under Transmittal No. 1)

6. Switched Access Service (Cont'd)

6.7 Rate Regulations (Cont'd)

6.7.6 Measuring Access Minutes (Cont'd)

When assumed minutes are used, the assumed minutes are the chargeable access minutes.

ALA or FGA access minutes or fractions thereof, the exact value of the fraction being a function of the switch technology where the measurement is made, are accumulated over the billing period for each line or hunt group, and are then rounded up to the nearest access minute for each line or hunt group. ATA950, ATANEA, ATAXXX, FGB, FGC and FGD access minutes or fractions thereof, the exact value of the fraction being a function of the switch technology where the measurement is made, are accumulated over the billing period for each end office, and are then rounded up to the nearest access minute for each end office.

Assumed minutes are used for ALA or FGA services which originate or terminate in end offices not equipped with measurement capabilities.

The assumed average access minutes used for services originating or terminating in offices where measurement capability does not exist are set forth in (A) following for ALA or Feature Group A Services, and in (B) following for ATA950 or Feature Group B Services.

(A) Where originating and terminating measurement capability does not exist for ALA or Feature Group A provided to an entry switch, the number of access minutes will be assumed to be 4195 access minutes per line per month when the line is arranged for two way calling (1510 originating and 2685 terminating).

(This page filed under Transmittal No. 1)

6. Switched Access Service (Cont'd)

6.7 Rate Regulations (Cont'd)

6.7.6 Measuring Access Minutes (Cont'd)

(A) (Cont'd)

Where measurement capability exists for either originating or terminating usage, but not both, on a line arranged for two way calling, the number of access minutes per line per month will be an assumed 4195 or the measured usage, whichever is greater. If the usage in the measured direction exceeds 4195 access minutes per line per month, it will be assumed that there is zero usage in the unmeasured direction. If the measured usage is less than 4195 access minutes per line per month, the usage in the unmeasured direction will be the assumed usage for that unmeasured direction; except that the total of measured and assumed minutes will not exceed the total assumed usage of 4195 access minutes designated for two way calling. If the total exceeds 4195 access minutes the assumed minutes shall be reduced so that the total of measured and unmeasured minutes equals 4195 access minutes.

Additionally, when the line is arranged for one way calling and there is no measurement capability for that direction, 1510 access minutes per month will be assumed for originating calling only lines and 2685 access minutes per month will be assumed for terminating calling only lines.

Notwithstanding the preceding, when an ALA or Feature Group A is used for the provision of WATS-type service where measurement capability exists at the WATS Serving Office but not at the ALA or Feature Group A entry switch, the measured WATS-type originating and or terminating minutes of use shall be separately summed and compared to their respective total assumed originating and/or terminating minutes of use. The number of access minutes per line per month will be the assumed or the measured usage, whichever is greater.

(This page filed under Transmittal No. 1)

6. Switched Access Service (Cont'd)

6.7 Rate Regulations (Cont'd)

6.7.6 Measuring Access Minutes (Cont'd)

(B) Where originating and terminating measurement capability does not exist for ATA950 or Feature Group B provided to an entry switch, the number of access minutes will be assumed to be 8700 access minutes per line per month when the trunk is arranged for two way calling (3132 originating and 5568 terminating).

Where measurement capability exists for either originating or terminating usage, but not both, on a trunk arranged for two way calling, the number of access minutes per trunk per month will be an assumed 8700 or the measured usage, whichever is greater. If the usage in the measured direction exceeds 8700 access minutes per trunk per month, it will be assumed that there is zero usage in the unmeasured direction. If the measured usage is less than 8700 access minutes per trunk per month, the usage in the unmeasured direction will be the assumed usage for that unmeasured direction except that the total of measured and assumed minutes will not exceed the total assumed usage of 8700 access minutes designated for two way calling. If the total exceeds 8700 access minutes the assumed minutes shall be reduced so that the total of measured and unmeasured minutes equals 8700 access minutes.

Additionally, when the trunk is arranged for one way calling and there is no measurement capability for that direction, 3132 access minutes per month will be assumed for originating calling only lines and 5568 access minutes per month will be assumed for terminating calling only lines.

6. Switched Access Service (Cont'd)

6.7 Rate Regulations (Cont'd)

6.7.6 Measuring Access Minutes (Cont'd)

(B)(Cont'd)

Notwithstanding the preceding, when ATA950 or Feature Group B is used for the provision of WATS or WATS-type service where measurement capability exists at the WATS Serving Office but not at the ATA950 or Feature Group B entry switch, the measured WATS or WATS-type originating and/or terminating minutes of use shall be separately summed and compared to their respective total assumed originating and/or terminating minutes of use. The number of minutes per trunk per month will be the assumed or the measured usage, whichever is greater.

(C) Access Line Arrangement or Feature Group A Usage Measurement

For originating calls over ALA or FGA, usage measurement begins when the originating ALA or FGA entry switch receives an off-hook supervisory signal forwarded from the customer's point of termination. This off-hook signal may be provided by the customer's equipment before the called party answers, or forwarded by the customer's equipment when the called party answers.

The measurement of originating call usage over ALA or FGA ends when the originating ALA or FGA entry switch receives an on-hook supervisory signal from either the originating end user's end office, indicating the originating end user has disconnected, or the customer's point of termination, whichever is recognized first by the entry switch.

(This page filed under Transmittal No. 1)

6. Switched Access Service (Cont'd)

6.7 Rate Regulations (Cont'd)

6.7.6 Measuring Access Minutes (Cont'd)

(C) Access line Arrangement or Feature Group A Usage Measurement (Cont'd)

For terminating calls over ALA or FGA, usage measurement begins when the terminating ALA or FGA entry switch receives an off-hook supervisory signal from the terminating end user's end office, indicating the terminating end user has answered. The measurement of terminating call usage over ALA or FGA ends when the terminating ALA or FGA entry switch receives an on-hook supervisory signal from either the terminating end user's end office, indicating the terminating end user has disconnected, or the customer's point of termination, whichever is recognized first by the entry switch.

(D) Access Trunk Arrangement 950 or Feature Group B Usage Measurement

For originating calls over ATA950 or FGB, usage measurement begins when the originating ATA950 or FGB entry switch receives answer supervision forwarded from the customer's point of termination, indicating the customer's equipment has answered.

The measurement of originating call usage over ATA950 or FGB ends when the originating ATA950 or FGB entry switch receives disconnect supervision from either the originating end user's end office, indicating the originating end user has disconnected, or the customer's point of termination, whichever is recognized first by the entry switch.

6. Switched Access Service (Cont'd)

6.7 Rate Regulations (Cont'd)

6.7.6 Measuring Access Minutes (Cont'd)

(D) Access Trunk Arrangement 950 or Feature Group B Usage Measurement (Cont'd)

For terminating calls over ATA950 or FGB, usage measurement begins when the terminating ATA950 or FGB entry switch receives answer supervision from the terminating end user's end office, indicating the terminating end user has answered.

The measurement of terminating call usage over ATA950 or FGB ends when the terminating ATA950 or FGB entry switch receives disconnect supervision from either the terminating end user's end office, indicating the terminating end user has disconnected, or the customer's point of termination, whichever is recognized first by the entry switch.

(E) Access Trunk Arrangement Non Equal Access or Feature Group C Usage Measurement

For originating calls over ATANEA or FGC, usage measurement begins when the originating ATANEA or FGC entry switch receives answer supervision from the customer's point of termination, indicating the called party has answered.

The measurement of originating call usage over ATANEA or FGC ends when the originating ATANEA or FGC entry switch receives disconnect supervision from either the originating end user's end office, indicating the originating end user has disconnected, or the customer's point of termination, whichever is recognized first by the entry switch.

6. Switched Access Service (Cont'd)

6.7 Rate Regulations (Cont'd)

6.7.6 Measuring Access Minutes (Cont'd)

(E) Access Trunk Arrangements Non Equal Access 950 or Feature Group C Usage Measurement (Cont'd)

For terminating calls over ATANEA or FGC to services other than 800, 900 or Directory Assistance, terminating ATANEA or FGC usage is not directly measured at the terminating entry switch, but is imputed from originating usage, excluding usage from calls to 800, 900 or Directory Assistance Services.

(F) Access Trunk Arrangement 101XXXX or Feature Group D Usage Measurement

For originating calls over ATAXXXX or FGD, usage measurement begins when the originating ATAXXXX or FGD entry switch receives the first wink supervisory signal forwarded from the customer's point of termination. For originating calls over FGD or ATAXXXX with SS7 signaling usage measurement begins when the last point of switching sends the initial address message to the customer.

6. Switched Access Service (Cont'd)

6.7 Rate Regulations (Cont'd)

6.7.6 Measuring Access Minutes (Cont'd)

(F) Access Trunk Arrangement 101XXXX or Feature Group D Usage Measurement (Cont'd)

The measurement of originating call usage over ATAXXXX or FGD ends when the originating ATAXXXX or FGD entry switch receives disconnect supervision from either the originating end user's end office, indicating the originating end user has disconnected, or the customer's point of termination, whichever is recognized first by the entry switch.

For 800 and 900 calls originating from end offices not having equal access capability using ATAXXXX or FGD with conventional signaling, usage measurement begins when the originating ATAXXXX or FGD entry switch receives either, off-hook supervisory signal forwarded from the customer's point of termination or answer supervision from the customer's point of termination indicating the called party has answered.

For terminating calls over ATAXXXX or FGD, the measurement of access minutes begins when the terminating ATAXXXX or FGD entry switch receives answer supervision from the terminating end user's end office, indicating the terminating end user has answered.

The measurement of terminating call usage over ATAXXXX or FGD ends when the terminating ATAXXXX or FGD entry switch receives disconnect supervision from either the terminating end user's end office, indicating the terminating end user has disconnected, or the customer's point of termination, whichever is recognized first by the entry switch.

(This page filed under Transmittal No. 1)

6. Switched Access Service (Cont'd)

6.7 Rate Regulations (Cont'd)

6.7.7 Network Blocking Charge for Access Trunk Arrangement 101XXXX or Feature Group D

The customer will be notified by the Telephone Company to increase its capacity (busy hour minutes of capacity or quantities of trunks) when excessive trunk group blocking occurs on groups carrying ATAXXXX or Feature Group D traffic and the measured access minutes for that hour exceed the capacity purchased. Excessive trunk group blocking occurs when the blocking thresholds stated below are exceeded. They are predicated on time consistent, hourly measurements over a 30 day period excluding Saturdays, Sundays and national holidays. If the order for additional capacity has not been received by the Telephone Company within 15 days of the notification, the Telephone Company will bill the customer, at the rate set forth in 6.8.1(C) following, for each overflow in excess of the blocking threshold when (1) the average "30 day period" overflow exceeds the threshold level for any particular hour and (2) the "30 day period" measured average originating or two-way usage for the same clock hour exceeds the capacity purchased.

Blocking Thresholds

Trunks in Service	1%	1/2%
1-2	.070	.045
3-4	.050	.035
5-6	.040	.025
7 or greater	.030	.020

The 1% blocking threshold is for transmission paths carrying traffic direct (without an alternate route) between an end office and a customer's premises. The 1/2% blocking threshold is for transmission paths carrying first routed traffic between an end office and a customer's premises via an access tandem.

(This page filed under Transmittal No. 1)

6. Switched Access Service (Cont'd)

6.7 Rate Regulations (Cont'd)

6.7.8 Application of Rates for Extension Service

ALA or Feature Group A Switched Access Service is available with extensions, i.e., additional terminations of the service at different building(s) in the same or a different LATA. ALA or Feature Group A extensions within the LATA are provided and charged for under the Telephone Company's local and/or general exchange service tariffs. ALA or Feature Group A extensions in different LATAs are provided and charged for as Special Access Service. The rate elements which apply are: A Voice Grade Channel Termination, Channel Mileage, if applicable, and Signaling Capability (optional features and functions), if applicable. All appropriate monthly rates and nonrecurring charges set forth in 7.7 following will apply.

6.7.9 Message Unit Credit

Calls from end users to the seven digit local telephone numbers associated with ALA or Feature Group A Switched Access Service are subject to Telephone Company local and/or general exchange service tariff charges (including message unit and toll charges as applicable). The monthly bills rendered to customers for their ALA or Feature Group A Switched Access Service will include a credit to reflect any message unit charges collected from their end users under the Telephone Company's local and/or general exchange service tariffs. When the customer is provided ALA or FGA service where measurement capability does not exist, the credit will apply to access minutes not to exceed 1510 per line per month. No credit will apply for any terminating ALA or FGA access minutes. The message unit credit for originating access minutes will be based on the generally applicable message unit charges of the Telephone Company. The message unit credit for originating ALA or FGA access minutes is as set forth in 6.8.6 following.

6. Switched Access Service (Cont'd)

6.7 Rate Regulations (Cont'd)

6.7.10 Local Information Delivery Services

Calls over Switched Access in the terminating direction to certain community information services will be rated under the applicable rates for Switched Access Service as set forth in 6.8 following. In addition, the charges per call as specified under the Telephone Company's local and/or general exchange service tariffs, e.g., 976 (DIAL-IT) Network Services, will also apply.

6.7.11 Mileage Measurement

The mileage to be used to determine the monthly rate for Switched Transport is calculated on the airline distance between the end office switch, which may be a Remote Switching Location, where the call carried by Switched Transport originates or terminates and the customer's serving wire center, except as set forth following. Where applicable, the V&H coordinates method is used to determine mileage. This method is set forth in the NATIONAL EXCHANGE CARRIER ASSOCIATION (NECA) TARIFF F.C.C. NO. 4 for Wire Center Information (V&H coordinates).

When Direct-Trunked Transport is provided to a host-remote arrangement, mileage for Direct-Trunked Transport is calculated using the V&H coordinates of the customer's serving wire center and the host office. Mileage for Host/Remote Transmission is calculated using the V&H coordinates of the host office and the remote switching system or remote switching module where the call originates or terminates.

Mileage for Tandem-Switched Transport is calculated using the V&H coordinates of the tandem and the host office. Mileage for Host/Remote Transmission is calculated using the V&H coordinates of the host office and the remote switching system or remote switching module where the call originates or terminates.

Mileage rates are as set forth in 6.8.1 following. To determine the rate to be billed, first compute the airline mileage using the V&H coordinates method. If the calculation results in a fraction of a mile, always round up to the next whole mile before determining the mileage and applying the rates. Then multiply the mileage by the appropriate rate.

Mileage for the DNAL BSA is calculated on the airline distance between the serving wire center of the customer's designated premises and the telephone company end office switch where the DNAL terminates. The V&H Coordinates method is used to determine mileage. This method is set forth in the NATIONAL EXCHANGE CARRIER ASSOCIATION (NECA) TARIFF F.C.C. No. 4 for Wire Center Information (V&H Coordinates).

6. Switched Access Service (Cont'd)

6.7 Rate Regulations (Cont'd)

6.7.11 Mileage Measurement (Cont'd)

Exceptions to the mileage measurement rules are as follows:

(A) Mileage for Direct Trunked Transport for ALA or Feature Group A Switched Access Service will be calculated on an airline basis, using the V&H coordinates method. The mileage measurement will be between the first point of switching (end office switch where the ALA or Feature Group A switching dial tone is provided) and the customer's serving wire center for the Switched Access Service provided.

In addition, mileage in the terminating direction for ALA or Feature Group A Switched Access Service access minutes which terminate at an end office other than the end office switch where the ALA or Feature Group A switching dial tone is provided, will be calculated on an airline basis, using the V&H coordinates method, between the end office switch where the access minutes terminate and the end office switch where the ALA or Feature Group A switching dial tone is provided. Tandem Switched transport per minute of use fixed and per minute of use per mile charges will be billed for these access minutes.

6. Switched Access Service (Cont'd

6.7 Rate Regulations (Cont'd)

6.7.11 Mileage Measurement (Cont'd)

(B) When the Alternate Traffic Routing optional feature is provided with Access Trunk Arrangements NEA and XXX or Feature Groups C and D, usage rated Tandem Switched Transport access minutes will be apportioned between the two transmission groups used to provide this feature. Such apportionment will be made using: (1) Standard Telephone Company traffic engineering methodology and will be based on the last trunk CCS desired for the high usage group, as described in 6.3.1(L) preceding, and the relative capacity ordered to the end office, when the feature is provided at an end office switch, or to the subtending end offices when the feature is provided at an access tandem switch. For ATAXXX and FGD, the Tandem Switched Transport mileage calculation will be based on the actual measured data which is recorded against the specific trunk group that carried a particular call. The customer will be billed accordingly.

(C) When terminating ATANEA or Feature Group C Switched Access Service is provided from multiple customer designated premises to an end office not equipped with measurement capabilities, the total Switched Transport access minutes for that end office will be apportioned among the trunk groups accessing the end office on the basis of the relative capacity ordered for each of those trunk groups. This apportionment will serve as the basis for Switched Transport mileage calculation.

(D) Where measurement capability does not exist and/or end office specific usage data is not available, ALA and FGA terminating usage will be apportioned among the end offices in the access area of the entry switch to which the service is provided, as described following. The usage to be apportioned will be the recorded usage or the assumed usage as set forth in 6.7.8 preceding.

6. Switched Access Service (Cont'd)

6.7 Rate Regulations (Cont'd)

6.7.11 Mileage Measurement (Cont'd)

(D) (Cont'd)

Such apportionment will be based on the ratio of the number of subscriber lines served by each end office in the access area to the total number of subscriber lines in the access area. The ratio thus developed is applied to the total ALA and FGA terminating usage.

Tandem Switched transport mileage for the access minutes apportioned in this manner will be calculated on an airline basis, using the V&H coordinates method, between each end office to which minutes have been apportioned and the end office switch where the ALA or FGA switching dial tone is provided.

(E) Switched Transport mileage for access minutes originating from or terminating at a remote switching system or module (RSS) or (RSM) will be calculated on an airline basis between the host end office and the RSS or RSM and the end office switch that serves as the host office and from the host office to the remote office serving the customer.

6.7.12 Shared Use

Shared use occurs when Switched Access Service and Special Access Service are provided over the same High Capacity service through a common interface. The regulations governing the provision of Shared Use Facilities are set forth in 7.2.7 following. Switched Access rates and charges as set forth in 6.8 following will apply for each channel of the high capacity facility that is used to provide Switched Access Service.

6.7.13 Directory Assistance Information Surcharge

Directory Assistance Information Surcharge rates are assessed to a customer based on the total number of access minutes. Directory Assistance Information Surcharge rates are as set forth in 6.8.3 following. The application of these rates with respect to individual Basic Service Arrangements or Feature Groups is as set forth in 6.7.1(D) preceding.

(This page filed under Transmittal No. 1)

ACCESS SERVICE

6. Switched Access Service (Cont'd)

6.8 Rates and Charges (Cont'd)

6.8.1 Switched Transport

(A) Entrance Facilities

	USOC	Monthly Rates	Nonrecurring Charge
(1) Voice Grade per point of termination	TSW2X	$ 16.04	$ 500.00
	TSW4X	24.68	500.00
(2) DS1 per point of termination	TMESW	36.00	585.66
(3) DS3 per point of termination	Z0MSW	1,560.00	1,950.70

(B) Direct Trunked Transport

	USOC	Monthly Rate Fixed	Monthly Rate Per Mile
(1) Voice Grade per transport channel	1L5SW	$ 6.00	$ .40
(2) DS1 per point of termination	1L5SW	15.60	3.26
(3) DS3 per point of termination	1L5SW	123.75	20.40

(C) Tandem Switched Transport/Common Transport

		Per Access Minute
(1) Tandem Switched Transport		
Fixed per MOU		$0.000108
Per mile per MOU		$0.000008
(2) Tandem Switching per Access Minute		$0.001004
(3) Host Remote Transmission		
Fixed per MOU		$0.001028(R)
Per Mile per MOU		$0.000022(R)
(4) Tandem End Office Multiplexing		
Rate per Access Minute		$0.000018
(5) Dedicated Tandem Trunk Port		
Rate per Month per port	PT8LX/DTRPT	$1.04

(D) Transport Interconnection Charge

	Per Access Minute
(1) Premium	
(a) Originating	0.000000
(b) Terminating	0.000000
(2) Non-Premium	
(a) Originating	0.000000
(b) Terminating	0.000000

Non-Facilities Based Interconnection Charge

(1) Premium	
(a) Originating	0.000000
(b) Terminating	0.000000
(2) Non-Premium	
(a) Originating	0.000000
(b) Terminating	0.000000

Rates contained in this transmittal are subject to subsequent adjustment, effective retrospectively, in the event the Commission or a court subsequently authorizes Nevada to correct its rates pursuant to pending motions, or petitions for reconsideration or waiver, or in the event of any other adjustment to an order of the Commission or a court.

(This page filed under Transmittal No. 103)

ACCESS SERVICE

6. Switched Access Service (Cont'd)

6.8 Rates and Charges (Cont'd)

6.8.1 Switched Transport (Cont'd)

	USOC	Nonrecurring Charge
(E) Installation Per Order		
(1) Per FGA, ALA line traversing Direct Trunked Transport	TPP++	$400.00
(2) Per ATA950, ATANEA, ATAXXX FGB, FGD, or 800 Access Service traversing Direct Trunked Transport or Tandem Switched Transport	TPP++	$56.38(R)

	Rate Per Call Blocked
(F) Network Blocking Charge +	$0.0037

(G) Nonchargeable Optional Features

(1) Supervisory Signaling

DX Supervisory Signaling arrangement
- Per Transport Channel Path*

SF Supervisory Signaling arrangement
- Per Transport Channel Path**

E&M Type 1 Supervisory Signaling arrangement
- Per Transport Channel Path*

E&M Type II Supervisory Signaling arrangement
- Per Transport Channel Path**

\+ Applies to ATAXXX or FGD.
* Available with Interface Groups 1 and 2.
** Available with Interface Groups 2 and 6 through 10.

Rates contained in this transmittal are subject to subsequent adjustment, effective retrospectively, in the event the Commission or a court subsequently authorizes Nevada to correct its rates pursuant to pending motions, or petitions for reconsideration or waiver, or in the event of any other adjustment to an order of the Commission or a court.

(This page filed under Transmittal No. 67)

6. Switched Access Service (Cont'd)

6.8 Rates and Charges (Cont'd)

6.8.1 Switched Transport (Cont'd)

(H) Nonchargeable Optional Features (Cont'd)

(1) Supervisory Signaling (Cont'd)

E&M Type III Supervisory Signaling
- Per Transport Channel Path*

Tandem Supervisory Signaling
- Per Transport Channel Path**

(2) Customer specification of the receive transmission level at the first point of switching within a range acceptable to the Telephone Company
- Per Transport Channel Path***

(3) Customer specification of Local Transport Termination
Four-wire termination in lieu of two-wire termination
- Per Transport Channel Path****

(4) Common Channel Signaling (CCSAC)

* Available with Interface Groups 1 and 2 for ATANEA, ATAXXX, FGC and FGD.
** Available with Interface Group 2 for ALA or FGA.
*** Available with Interface Groups 2 through 10 for ALA, ATA950, FGA and FGB. The range of transmission levels which may be specified is described in Technical Reference PUB 62500.
**** Available with ATA950 or Feature Group B with type B Transmission Performance.

(This page filed under Transmittal No. 1)

ACCESS SERVICE

6. Switched Access Service (Cont'd)

6.8 Rates and Charges (Cont'd)

6.8.1 Switched Transport (Cont'd)

(I) Chargeable Optional Features

(1) Multiplexing - per Arrangement

	USOC	Monthly Rates	Nonrecurring Charges
DS3 to DS1 - Per Arrangement	MQ3SW	$131.25(R)	None
DS1 to Voice/Digital - Per Arrangement	MQ1SW	54.00(R)	None

(2) Carrier Identification Parameter

	C1PAT	45.00	None

Rates contained in this transmittal are subject to subsequent adjustment, effective retrospectively, in the event the Commission or a court subsequently authorizes Nevada to correct its rates pursuant to pending motions, or petitions for reconsideration or waiver, or in the event of any other adjustment to an order of the Commission or a court.

(This page filed under Transmittal No. 67)

6. Switched Access Service (Cont'd)

6.8 Rates and Charges (Cont'd)

6.8.2 Local Switching

(A) Usage Sensitive Rates

Premium		Rate Per Access Minute
LS1 -	Feature Groups A and B except for FGA and FGB used to terminate traffic to a WAL provided from an equal access end office	0.001402(R)
LS1A -	Access Line Arrangement and Access Trunk Arrangement 950 except for ALA and ATA950 used to terminate traffic to a WAL provided from an Equal Access End Office	$0.001402(R)
LS2 -	Feature Groups C & D, FGA and FGB used to terminate traffic to a WAL provided from an equal access end office, and originating FGB routed to FGD as specified in Section 6.2.4(A)(9), preceding.	$0.001402(R)
LS2A -	Access Trunk Arrangements NEA and 10XXX, ALA and ATA950 used to terminate traffic to a WAL provided from an Equal Access End Office, and originating ATA950 routed to ATAXXX as specified in Section 6.2.4(A)(9) preceding.	$0.001402(R)

Feature Group Transitional (Non-Premium)

Per Access Minute $0.000849

Basic Service Arrangement Transitional (Non-Premium)

Per Access Minute $0.000849

(B) Dedicated End Office Trunk Port

	USOC	
Per Port	PT8JX/DTRPE	$13.00

(C) Shared End Office Trunk Port

Per Minute of Use $0.001663

(D) Feature Group A Line Port

Per Port	PT8JX/FGALP	$13.00

Rates contained in this transmittal are subject to subsequent adjustment, effective retrospectively, in the event the Commission or a court subsequently authorizes Nevada to correct its rates pursuant to pending motions, or petitions for reconsideration or waiver, or in the event of any other adjustment to an order of the Commission or a court.

(This page filed under Transmittal No. 103)

6. Switched Access Service (Cont'd)

6.8 Rates and Charges (Cont'd)

6.8.2 Local Switching (Cont'd)

(D) Common Switching Optional Features and BSEs

	FID/USOC	
Call Denial on Line or Hunt Group (available with ALA or FGA) - Per Transmission Path or Transmission Path Group	CAD	
Service Code Denial on Line or Hunt Group (available with ALA or FGA) - Per Transmission Path or Transmission Path Group	SCD	
Hunt Group Arrangement (available with FGA) - Per Transmission Path Group	HML/HTG	
Hunt Group Arrangement (Available with ALA)(BSE) - Per Transmission Path Group	CF3HG/MLHTG	Monthly Rate $0.12
Uniform Call Distribution Arrangement (available with FGA) - Per Transmission Path Group	UCD	

(This page filed under Transmittal No. 1)

6. Switched Access Service (Cont'd)

6.8 Rates and Charges (Cont'd)

6.8.2 Local Switching (Cont'd)

(D) Common Switching Optional Features and BSEs (Cont'd)

	FID/USOC	
Uniform Call Distribution Arrangement (Available with ALA)(BSE) - Per Transmission Path Group	CF3UC/CDUHT	Monthly Rate $0.15
Nonhunting Number for Use with Hunt Group Arrangement or Uniform Call Distribution Arrangement (available with FGA) - Per Transmission Path	NHN	
Nonhunting Number for Use with Hunt Group Arrangement or Uniform Call Distribution Arrangement (available with ALA) - Per Transmission Path Group	MLHPT	
Automatic Number Identification/ Charge Number (available with ATA950 or FGB, ATANEA or FGC and FGD or FGD with CCSAC Optional Feature) - Per Transmission Path Group	ANI/SLCHG	
Automatic Number Identification/ Charge Number (available with ATAXXX and ATAXXX with CCSAC Optional Feature) - Per Call	BEANI	Monthly Rate $0.000164

(This page filed under Transmittal No. 1)

6. Switched Access Service (Cont'd)

6.8 Rates and Charges (Cont'd)

6.8.2 Local Switching (Cont'd)

(D) Common Switching Optional Features and BSEs (Cont'd)

	FID/USOC
Up to 7 Digit Outpulsing of Access Digits to Customer (available with ATA950 or FGB) - Per Transmission Path Group	USDO
Cut-through (available with ATAXXX or FGD) - Per End Office or Access Tandem	CTO
Delay Dial Start-Pulsing Signaling (available with ATANEA or FGC) - Per Transmission Path Group	DDSP
Immediate Dial Pulse Address Signaling (available with ATANEA or FGC) - Per Transmission Path Group	ADS IDP
Dial Pulse Address Signaling (available with ATANEA or FGC) - Per Transmission Path Group	ADS DP
Service Class Routing (available with ATANEA or FGC and ATAXXX or FGD) - Per Transmission Path Group	SCRT
Alternate Traffic Routing (available with ATANEA or FGC and ATAXXX or FGD) - Per Transmission Path Group	ARTG

(This page filed under Transmittal No. 1)

6. Switched Access Service (Cont'd)

6.8 Rates and Charges (Cont'd)

6.8.2 Local Switching (Cont'd)

(D) Common Switching Optional Features and BSEs (Cont'd)

		FID/USOC
Trunk Access Limitation Arrangement (available with ATANEA or FGC and ATAXXX or FGD) - Per End Office		CHOK
Call Gapping Arrangement (available with ATAXXX or FGD) - Per End Office		GAP
International Carrier Option (available with ATAXXX or FGD) - Per End Office and Access Tandem		INCO
Band Advance Arrangement Access Service utilized in the provision of WATS or WATS-type Services (available with all Basic Service Arrangements or Feature Groups A, B, C, D) - Per Arrangement		
Call Transfer (BSE) (Available with ALA) - Per Transmission Path Group	USOC TRC3W	Monthly Rate ICB

(This page filed under Transmittal No. 1)

6. Switched Access Service (Cont'd)

6.8 Rates and Charges (Cont'd)

6.8.2 Local Switching (Cont'd)

(D) Common Switching Optional Features and BSEs (Cont'd)

	FID
End Office End User Line Service Screening for Use with Special Access Service utilized in the provision of WATS or WATS-type Services (available with ATANEA or FGC and ATAXXX or FGD) - Per Transmission Path	BAND
Hunt Group Arrangement for Use with Special Access Service utilized in the provision of WATS or WATS-type Services (available with all Basic Service Arrangements or Feature Groups A, B, C and D) - Per Transmission Path Group	HML/HTG
Uniform Call Distribution Arrangement for Use with Special Access Service utilized in the provision of WATS of WATS-type Services (available with all Basic Service Arrangements or Feature Groups A, B, C and D) - Per Transmission Path Group	HTY UD

(This page filed under Transmittal No. 1)

6. Switched Access Service (Cont'd)

6.8 Rates and Charges (Cont'd)

6.8.2 Local Switching (Cont'd)

(D) Common Switching Optional Features and BSEs (Cont'd)

	FID/USOC
Nonhunting Number for Use with Hunt Group Arrangement or Uniform Call Distribution Arrangement for use with Special Access Service utilized in the provision of WATS or WATS-type Services (available with all Basic Service Arrangements or Feature Groups A, B, C and D) - Per Transmission Path	NHN
Calling Party Number (CPN)** - Per Transmission path group	SLCPN
Carrier Selection Parameter (CSP)** - Per transmission path group	NR4CS/SLCSP

Access Transport Parameter***
- Per Customer per switch

	FID/ USOC	Monthly	Nonrecurring
Direct Inward Dialing (DID)* (Available with ALA or FGA) Up to seven-digit outpulsing of the called number provided to the customer premises. per trunk equipped	NDT	$7.99	$192.79
Answer Supervision - Lineside (Available with ALA) - per line	ANSPF	ICB	ICB

* DID rate are in addition to usage billed on assumed minutes of use per month.

** Available only with FGD or ATAXXX with CCSAC optional feature.

*** Available only with FGD or ATAXXX with CCSAC and 64CCC optional features.

(This page filed under Transmittal No. 1)

6. Switched Access Service (Cont'd)

6.8 Rates and Charges (Cont'd)

6.8.2 Local Switching (Cont'd)

(E) Switched Transport Termination Nonchargeable Options

	FID
(1) Line Side Terminations (For ALA or FGA)	
Two Way Operation	
- Dial Pulse with Loop Start	NC+++A
- Dial Pulse with Ground Start	NC+++E
- DTMF with Loop Start	NC+++F
- DTMF with Ground Start	NC+++G

(This page filed under Transmittal No. 1)

6. Switched Access Service (Cont'd)

6.8 Rates and Charges (Cont'd)

6.8.2 Local Switching (Cont'd)

(E) Switched Transport Termination Nonchargeable Options (Cont'd)

	FID
(1) Line Side Terminations (For ALA or FGA) (Cont'd)	
Terminating Operation	
- Dial Pulse with Loop Start	NC+++N
- Dial Pulse with Ground Start	NC+++P
- DTMF with Loop Start	NC+++R
- DTMF with Ground Start	NC+++S
Originating Operation	
- Loop Start	NC+++U
- Ground Start	NC+++V
(2) Trunk Side Terminations (For all Access Trunk Arrangements or FGB, FGC and FGD)	
Standard Trunk for Originating, Terminating or Two-Way Operation (available with all Access Trunk Arrangements or FGB, FGC and FGD)	TTC SO TTC ST TTC TY
Rotary Dial Station Signaling Trunk (available with ATA950 or FGB)	TTC RD

(This page filed under Transmittal No. 1)

6. Switched Access Service (Cont'd)

6.8 Rates and Charges (Cont'd)

6.8.2 Local Switching (Cont'd)

(E) Switched Transport Termination Nonchargeable Options (Cont'd)

	FID
(2) Trunk Side Terminations (For all Access Trunk Arrangements or FGB, FGC and FGD) (Cont'd)	
Operator Trunks - MOS - Coin, Non-Coin or Combined Coin and Non-Coin TTC CC (available with ATANEA or FGC)	TTC CO TTC NC
Coin or Combined coin and non-coin (Available with ATAXXX or FGD)	TTC FF
Operator Trunks - EAOSS - Full Feature Arrangement (available with ATAXXX or FGD)	TTC FF
(3) Tandem Signaling (MF or SS7) (available with ATAXXX or FGD)	

(This page filed under Transmittal No. 1)

6. Switched Access Service (Cont'd)

6.8 Rates and Charges (Cont'd)

6.8.3 Directory Assistance Information Surcharge

	Premium	Transitional
- Per 100 Access Minutes	$0.000000	0.000000

6.8.4 Network Access Services

	USOC	Monthly Rates	Nonrecurring Charges
(A) DNAL Rates and Charges			
(1) DNAL Termination			
- Per Point of Termination			
- 2 wire	T6E2X	$ 8.68	$747.94
- 4 wire	T6E4X	17.35	747.94

(This page filed under Transmittal No. 1)

6. Switched Access Service (Cont'd)

6.8 Rates and Charges (Cont'd)

6.8.4 Network Access Services (Cont'd)

	USOC	Monthly Rates	Nonrecurring Charges
(A) DNAL (Cont'd)			
(2) DNAL Mileage			
DNAL Mileage Facility			
Per mile	CMF	$ 0.70	None
DNAL Mileage Termination			
Per Termination	CMT	11.29	None
(B) DNAL BSEs			
(1) #Availability and Stop Hunting Control Arrangement	(BSE)*	4.20	
(2) Port Access To Verify Integrity of Subscriber Lines -Per Port (2 ports required)	(BSE) VE1SL	None	$500.00

Requires the use of DNAL as specified in Section 6.2.6A.

* Availability and Stop Hunting Control Arrangement is known as Make Busy Key in Bell Operating Companies ONA Special Report #5.

(This page filed under Transmittal No. 1)

6. Switched Access Service (Cont'd)

6.8 Rates and Charges (Cont'd)

6.8.5

6.8.6 Message Unit Credit

	Rates
- Per originating ALA or Feature Group A access minute	$0.001509(I)

6.8.7 SS7 Interconnection

	USOC	Nonrecurring Charge	Monthly Rate
(A) SS7 Links			
- per Link	SL7	$1,131.17	$ 11.29
- per Mile			.70
(B) STP Port			
- per Port	SLPTC		$1,046.00

6.8.8 Toll Free Access Service

	Recurring Charges
Basic Toll Free Access Query	
- per Query	$0.005183
POTS Translation	
- per Query	0.000000
Multiple Destination Routing	
- per Query	0.000499
Six Digit Master Number List Turnaround	
- per Query	0.003652

Rates contained in this transmittal are subject to subsequent adjustment, effective retrospectively, in the event the Commission or a court subsequently authorizes Nevada to correct its rates pursuant to pending motions, or petitions for reconsideration or waiver, or in the event of any other adjustment to an order of the Commission or a court.

(This page filed under Transmittal No. 44)

6. Switched Access Service (Cont'd)

6.8 Rates and Charges (Cont'd)

6.8.9 Billing Name and Address Service

Set -up Fee -per CIC	$3,000.00
BNA Found -per query	.77
BNA Not Found -per query	.39

(This page filed under Transmittal No. 1)

ACCESS SERVICE

(This page filed under Transmittal No. 1)

ACCESS SERVICE

(This page filed under Transmittal No. 1)

ACCESS SERVICE

(This page filed under Transmittal No. 90)

7. Special Access Service

7.1 General

Special Access Service provides a transmission path to connect customer designated premises*, directly, through a Telephone Company hub or hubs where bridging or multiplexing functions are performed, or to connect a customer designated premises and a WATS Serving Office. Special Access Service includes all exchange access not utilizing Telephone Company end office switches.

The connections provided by Special Access Service can be either analog or digital. Analog connections are differentiated by spectrum and bandwidth. Digital connections are differentiated by bit rate.

Special Access Services are ordered under the Access Order provisions set forth in Section 5. preceding.

Rates and charges for Special Access Service are set forth in Sections 7.7.6, 7.8.5, 7.9.4, 7.10.5, and 7.11.5 following, with the exception of the services provided by the Telephone Company in the Metropolitan Statistical Areas (MSAs) in which the Telephone Company has received Phase II pricing flexibility pursuant to Subpart H of Part 69 of the Commission’s Rules. The rates and charges for the Special Access Services in the MSAs that have received Phase II pricing flexibility are set forth in Section 22.

7.1.1 Channel Types

There are seven types of channels used to provide Special Access Services. Each type has its own characteristics. All are subdivided by one or more of the following:

- Transmission specifications,
- Bandwidth,
- Speed (i.e., bit rate),
- Spectrum

Customers can order a basic channel and select from a list of available transmission parameters and channel interfaces those that they desire to meet specific communications requirements.

For purposes of ordering channels, each has been identified as a type of Special Access Service. However, such identification is not intended to limit a customer's use of the channel nor to imply that the channel is limited to a particular use. For example, if a customer’s equipment is capable of transmitting voice over a channel that is identified as a Metallic Service in this tariff, there is no restriction against doing so.

* Telephone Company Centrex CO and CO-like switches and packet switches included in Public Packet Switching Network (PPSN)(1) Service and Interconnection Chambers for EIS are considered to be a customer designated premises for purposes of this tariff. (C)

(1) As of October 6, 2004, PPSN Interface Arrangement service utilizing the X.25 and X.75 protocol is obsolete and limited to existing installations, at existing locations, for existing customers. (N) (N) (N)

(This page filed under Transmittal No. 72)

7. Special Access Service (Cont'd)

7.1 General (Cont'd)

7.1.1 Channel Types (Cont'd)

Following is a brief description of each type of channel:

Voice Grade - a channel for the transmission of analog signals within an approximate bandwidth of 300 to 3000Hz.

Program Audio - a channel for the transmission of audio signals. The nominal frequency bandwidths are from 200 to 3500 Hz, from 100 to 5000 Hz, from 50 to 8000 Hz, or from 50 to 15000 Hz.

Video - a channel for the transmission of standard 525 line 60 field monochrome or National Television Systems Committee color video signal and one or two associated 5 or 15 kHz audio signals. The bandwidth is either 30 Hz to 4.5 MHz or 30 Hz to 6.6 MHz.

Digital Data - a channel for the digital transmission of synchronous serial data at rates of 2.4, 4.8, 9.6, 56 or 64 kbps.

High Capacity - a channel for the transmission of isochronous serial digital data at rates of 1.544, 3.152, 6.312, 44.736 or 274.176 Mbps.

7. Special Access Service (Cont'd)

7.1 General (Cont'd)

7.1.1 Channel Types (Cont'd)

Detailed descriptions of each of the channel types are provided in 7.5 through 7.11 following.

The customer also has the option of ordering Voice Grade and High Capacity facilities (i.e., 1.544 Mbps, 3.152 Mbps, 6.312 Mbps, 44.736 Mbps and 274.176 Mbps) to Telephone Company hubs for multiplexing to individual channels of a lower capacity or bandwidth. Descriptions of the types of multiplexing available at the hubs, as well as the number of individual channels which may be derived from each type of facility are set forth in 7.7 and 7.11 following. Additionally, the customer may specify optional features for the individual channels derived from the facility to further tailor the channel to meet specific communications requirements. Descriptions of the optional features and functions available are set forth in 7.2.1 following.

For example, a customer may order a 3.152 Mbps High Capacity channel from a customer designated premises to a Telephone Company hub for multiplexing to two 1.544 Mbps channels. The 1.544 Mbps channels may be further multiplexed at the same or a different hub to Voice Grade channels or may be extended to other customer designated premises or hubs. Optional features may be added to either the 1.544 Mbps or the Voice Grade channels.

7. Special Access Service (Cont'd)

7.1 General (Cont'd)

7.1.2 Service Descriptions

For the purposes of ordering, the categories of Special Access Service are:

Program Audio (AP)
Video (TV)
Voice Grade (VG)
-WATS Access Line (WAL)
Digital Data (DA)
High Capacity (HC)

Each service consists of a basic channel to which a technical specifications package (customized or predefined), channel interface(s) and, when desired, optional features and functions are added to construct the service desired by the customer. Technical specifications packages and optional features and functions are described in this section. Channel interfaces are described in 15.3 and 15.4 following.

Customized technical specifications packages will be provided where technically feasible. If the Telephone Company determines that the requested parameter specifications are not compatible, the customer will be advised and given the opportunity to change the order.

When a customized channel is ordered the customer will be notified whether Additional Engineering Charges apply. In such cases, the customer will be given an estimate of the hours to be billed before any further action is taken on the order.

7. Special Access Service (Cont'd)

7.1 General (Cont'd)

7.1.2 Service Descriptions (Cont'd)

The channel description specifies the characteristics of the basic channel and indicates whether the channel is provided between customer designated premises, between a customer designated premises and a Telephone Company hub where bridging or multiplexing functions are performed, between hubs, or between a customer designated premises and a WATS Serving Office.

(A) Information pertaining to the technical specifications packages indicates the transmission parameters that are available with each package. This information is displayed in a matrix with the transmission parameters listed down the left side and the packages listed across the top. Each package is identified by a code, e.g., VGC. The first two letters of the code indicate the category of Special Access Service to which the parameters are applicable. These two letter codes are shown above in parentheses following the category of Special Access Service. The letter "C" following the two letter code indicates the technical specifications package for a customized service. The letter "w" following the two letter code indicates the technical specifications package for a voice grade Special Access Service used in the provision of WATS or WATS-type service using a Telephone Company designated WATS Serving Office. A numeric or alpha-numeric designation following the two letter code indicates the specific predefined package. For a customized service, the customer may select any parameters available with that category of service as long as the parameters are compatible. When appropriate, the Technical Reference which contains detailed specifications for the parameters is shown following the matrix.

7. Special Access Service (Cont'd)

7.1 General (Cont'd)

7.1.2 Service Descriptions (Cont'd)

(B) Channel interfaces at each Point of Termination on a two-point service may be symetrical or asymetrical. On a multipoint service they may also be symetrical or asymetrical, but communications can only be provided between compatible channel interfaces. Only certain channel interfaces are compatible. These are set forth in 15.3.5 following, in a combination format.

(C) Only certain channel interface combinations are available with the predefined technical specifications packages. These are delineated in the Technical References set forth in (F) following. When a customized channel is requested, all channel interface combinations available with the specified type of service are available with the customized channel.

(D) The optional features and functions available with each type of Special Access Service are described in this section. The optional features and functions information also indicates with which technical specifications packages they are available. Such information is displayed in a matrix with the optional feature or function listed down the left side and the technical specifications package listed across the top.

(E) The Telephone Company will maintain existing transmission specifications on services installed prior to the effective date of this tariff, except that existing services with performance specifications exceeding the standards listed in this provision will be maintained at the performance levels specified in this tariff.

7. Special Access Service (Cont'd)

7.1 General (Cont'd)

7.1.2 Service Descriptions (Cont'd)

(F) All services installed after the effective date of this tariff will conform to the transmission specification standards contained in this tariff or in the following Technical References for each category of service:

Digital Data Over Voice	PUB L-780080-PB/NB
Voice Grade	TR-NPL-000335
	PUB 41004, Table 4
- WATS Access Line	TR-NPL-000334
Program Audio	TR-NPL-000337
Video	TR-NPL-000338
Digital Data	PUB 62507
Digital Data	PUB 62310
High Capacity	PUB 62411
High Capacity	TA-TSY-000342

7.1.3 Service Configurations

There are two types of service configurations over which Special Access Services are provided: two-point service and multipoint service.

(A) Two-Point Service

A two-point service connects two customer designated premises, either on a directly connected basis or through a hub where multiplexing functions are performed, or a customer designated premises and a WATS Serving Office (WSO).

(This page filed under Transmittal No. 1)

7. Special Access Service (Cont'd)

7.1.3 Service Conficrurations (Cont'd)

(A) Two-Point Service (Cont,d)

Applicable rate elements are:
- Channel Terminations
- Channel Mileage (as applicable)
- optional Features and F'tmctions (when applicable)

A Special Access Surcharge, as set forth in 7.3 following and a Message Station Equipment Recovery Charge, as set forth in 7.4 following, may be applicable.

The following diagram depicts a two-point Voice Grade service connecting two customer designated premises (CDP). The service is provided with C-Type conditioning.

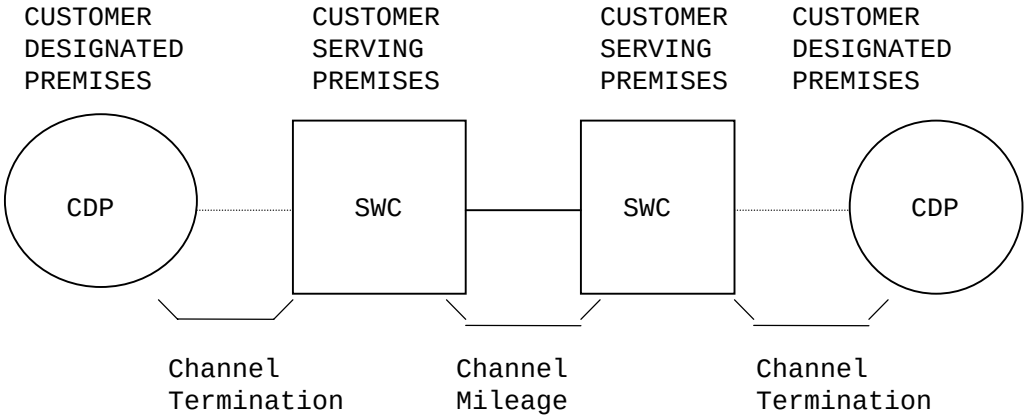

Optional Features and Functions
C-Type Conditioning

Applicable rate elements are:
- Channel Terminations (applicable one (1) per CDP*)
- Channel Mileage (i section, Channel Mileage Facility per mile plus 2 Channel Mileage Terminations)
- C-Type conditioning Optional Feature

* When CDP is an Interconnection Chamber (See EIS Service Section 18 following) the EIS Channel Termination as described in Section 18 following will apply.

(This page filed under Transmittal No. 1)

7. Special Access Service (Cont'd)

7.1 General (Cont'd)

7.1.3 Service Configurations (Cont'd)

(B) Multipoint Service

Multipoint service connects three or more customer designated premises through one or more Telephone Company hubs. Only certain types of Special Access Service are provided as multipoint service. These are so designated in the descriptions for the appropriate channel.

The channel between hubs (i.e., bridging locations) on a multipoint service is a mid-link. There is no limitation on the number of mid-links available with a multipoint service. However, when more than three mid-links in tandem are provided, the quality of the overall service may be degraded.

Multipoint service utilizing a customized technical specifications package, as set forth in 7.1.2 preceding, will be provided when technically possible. If the Telephone Company determines that the requested characteristics for a multipoint service are not compatible, the customer will be advised and given the opportunity to change the order.

When ordering, the customer will specify the desired bridging hub(s). EXCHANGE CARRIER ASSOCIATION TARIFF F.C.C. NO. 4 identifies serving wire centers, hub locations and the type of bridging functions available.

Applicable Rate Elements are:

- Channel Terminations (one per customer designated premises)

7. Special Access Service (Cont'd)

7.1 General (Cont'd)

7.1.3 Service Configurations (Cont'd)

(B) Multipoint Service (Cont'd)

- Channel Mileage (as applicable between the serving wire center for each customer designated premises and the hub and between hubs).
- Bridging
- Additional Optional Features and Functions (when applicable).

The Special Access Surcharge, as set forth in 7.3 following, and a Message Station Equipment Recovery Charge, as set forth in 7.4 following, may be applicable.

Example: Voice Grade multipoint service connecting four customer designated premises (CDP) via two customer specified bridging hubs.

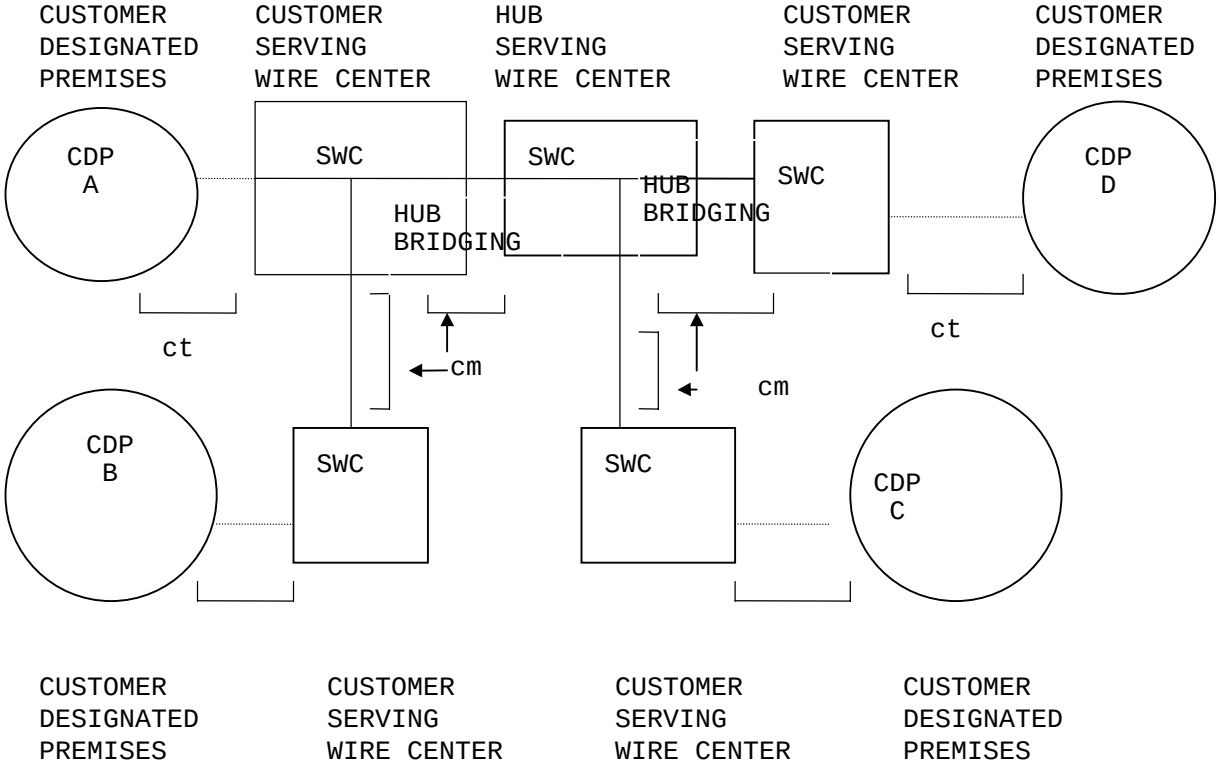

CT - Channel Termination
CM - Channel Mileage

(This page filed under Transmittal No. 4)

7. Special Access Service (Cont'd)

7.1 General (Cont'd)

7.1.3 Service Configurations (Cont'd)

(B) Multipoint Service (Cont'd)

Applicable rate elements are:

- Channel Terminations (4 applicable)
- Channel Mileage (4 sections, Channel Mileage Facility per mile plus 2 Channel Mileage Terminations per section)
- Bridging Optional Feature (6 applicable, i.e., each bridge port)

7.1.4 Alternate Use

Alternate Use occurs when a service is arranged by the Telephone Company so that the customer can select different types of transmission at different times. A customer may use a service in any privately beneficial manner. However, where technical or engineering changes are required to effectuate an alternate use, the Telephone Company will make such special arrangements available on an individual case basis.

The arrangement required to transfer the service from one operation to the other (i.e., the transfer relay and control leads) will be rated and provided on an individual case basis and filed in Section 12., Specialized Service or Arrangements. The customer will pay the stated tariff rates for the Access Service rate elements for the service ordered (i.e., Channel Terminations, Channel Mileage [as applicable] and Optional Features and Functions [if any]).

7. Special Access Service (Cont'd)

7.1 General (Cont'd)

7.1.5 Special Facilities Routing

A customer may request that the facilities used to provide Special Access Service be specially routed. The regulations, rates and charges for Special Facilities Routing (i.e., Avoidance, Diversity and Cable-Only) are set forth in 11. following.

7.1.6 Design Layout Report

At the request of the customer, the Telephone Company will provide to the customer the make-up of the facilities and services provided under this tariff as Special Access Service to aid the customer in designing its overall service. This information will be provided in the form of a Design Layout Report. The Design Layout Report will be provided to the customer at no charge, and will be reissued or updated whenever these facilities are materially changed.

7.1.7 Acceptance Testing

At no additional charge, the Telephone Company will, at the customer's request, cooperatively test at the time of installation, the following parameters:

(A) For Voice Grade analog services, acceptance test will include tests for loss, 3-tone slope, DC continuity, operational signaling, C-notched noise, and C-message noise when these parameters are applicable and specified in the order for service. Additionally, for Voice Grade services, a balance (improved loss) test will be made if the customer has ordered the improved loss optional feature.

7. Special Access Service (Cont'd)

7.1 General (Cont'd)

7.1.7 Acceptance Testing (Cont'd)

(B) For other analog services (i.e., Program Audio, and Video) and for digital services (i.e., Digital Data and High Capacity) service, acceptance tests will include tests for the parameters applicable to the service as specified by the customer in the order for service.

In addition to the above tests, Additional Cooperative Acceptance Testing for Voice Grade service to test other parameters, as described in 13.3.5(B) following, is available at the customer's request. All test results will be made available to the customer upon request.

7.1.8 Ordering Options and Conditions

Special Access Service is ordered under the Access Order provisions set forth in 5. preceding. Also included in that section are other charges which may be associated with ordering Special Access Service (e.g., Service Date Change Charges, Cancellation Charges, etc.).

7. Special Access Service (Cont'd)

7.2 Rate Regulations

This section contains the specific regulations governing the rates and charges that apply for Special Access.

7.2.1 Rate Categories

There are three basic rate categories which apply to Special Access Service:

- Channel Terminations (described in 7.2.1(A) following)
- Channel Mileage (described in 7.2.1(B) following)
- Optional Features and Functions (described in 7.2.1(C) following)

7. Special Access Service (Cont'd)

7.2 Rate Regulations (Cont'd)

7.2.1 Rate Categories (Cont'd)

(A) Channel Termination

The Channel Termination rate category provides for the communications path between a customer designated premises and the serving wire center of that premises. It also provides for the unrecovered portion of inside wire investment assigned to Special Access Service. Included as part of the Channel Termination is a standard channel interface arrangement which defines the technical characteristics associated with the type of facilities to which the access service is to be connected at the Point of Termination (POT) and the type of signaling capability, if any. The signaling capability is provided as an optional feature as set forth in (C) following. One Channel Termination charge applies per customer designated premises at which the channel is terminated. For WATS Access Line Service, only one Channel Termination applies per service. This charge will apply even if the customer designated premises and the serving wire center are collocated in a Telephone Company building.

(B) Channel Mileage

The Channel Mileage rate category provides for the transmission facilities between the serving wire centers associated with two customer designated premises, between the serving wire centers associated with a customer designated premises and a Telephone Company Hub or between two Telephone Company Hubs. Channel mileage rates are made up of the Channel Mileage Facility rate and the Channel Mileage Termination rate.

7. Special Access Service (Cont'd)

7.2 Rate Regulations (Cont'd)

7.2.1 Rate Categories (Cont'd)

(B) Channel Mileage (Cont'd)

(1) Channel Mileage Facility

The Channel Mileage Facility rate recovers the cost for the transmission path which extends between the Telephone Company serving wire centers and/or hub(s) and includes primarily outside plant used to provide the facility.

When the customer orders High Capacity Service as described in 7.11 and 7.11.5 following, the Channel Mileage Facility must be ordered in conjunction with an associated Channel Termination as described in 7.2.1.(A), preceding.

(2) Channel Mileage Termination

The Channel Mileage Termination rate recovers the cost for end office equipment associated with terminating the facility (i.e., basic circuit equipment and terminations at serving wire centers and hubs). The Channel Mileage Termination rate will apply at the serving wire center(s) for each customer designated premises and Telephone Company hub where the channel is terminated. If the Channel Mileage is between Telephone Company bridging hubs, the Channel Mileage Termination rate will apply per Telephone Company designated hub. When the Channel Mileage Facility is zero (i.e., collocated serving wire centers), neither the Channel Mileage Facility rate nor the Channel Mileage Termination rate will apply.

7. Special Access Service (Cont'd)

7.2 Rate Regulations (Cont'd)

7.2.1 Rate Categories (Cont'd)

(C) Optional Features and Functions

The Optional Features and Functions rate category provides for optional features and functions which may be added to a Special Access Service to improve its quality or utility to meet specific communications requirements. These are not necessarily identifiable with specific equipment, but rather represent the end result in terms of performance characteristics which may be obtained. These characteristics may be obtained by using various combinations of equipment. Although the equipment necessary to perform a specified function may be installed at various locations along the path of the service, they will be charged for as a single rate element.

Examples of Optional Features and Functions that are available include, but are not limited to, the following:

- Signaling Capability
- Hubbing Functions
- Conditioning
- Transfer Arrangements

A hub is a Telephone Company designated serving wire center at which bridging or multiplexing functions are performed. The bridging functions performed are to connect three or more customer designated premises in a multipoint arrangement. The multiplexing functions are to channelize analog or digital facilities to individual services requiring a lower capacity or bandwidth. EXCHANGE CARRIER ASSOCIATION TARIFF F.C.C. NO. 4 identifies serving wire centers, hub locations and the type of bridging or multiplexing functions available.

7. Special Access Service (Cont'd)

7.2 Rate Regulations (Cont'd)

7.2.1 Rate Categories (Cont'd)

(C) Optional Features and Functions (Cont'd)

Descriptions for each of the available Optional Features and Functions are set forth in 7.5 through 7.11 following.

(D) Collocation Transport

Collocation Transport provides for the transmission facilities between collocation arrangements located in Telephone Company Central Offices.

There are two components of Collocation Transport.

(1) Inter/Intra Office Fixed

Inter/Intra office fixed rate element provides for the electronic equipment required to terminate a channel between two collocation arrangements located either in the same central office (intra) or in two separate central offices (inter).

When the DS1 Intra Office Fixed channel is ordered between two collocation arrangements that are for the same collocator, it will be provisioned as a temporary arrangement and will be in service until the collocator's own facilities are installed, not to exceed 150 days. There is no additional charge to disconnect these temporary facilities.

(2) Inter Office Per Mile

The Per Mile charge provides for the electronic equipment and facilities necessary to provide the interoffice transport between two collocation arrangements.

7. Special Access Service (Cont'd)

7.2 Rate Regulations (Cont'd)

7.2.2 Types of Rates and Charges

There are three types of rates and charges. These are monthly rates, daily rates and nonrecurring charges. The rates and charges are described as follows:

The rates and charges in effect at the time that the Special Access Service is installed and accepted by the customer are the rates and charges which will be billed to the customer requesting the service.

(A) Monthly Rates

Monthly rates are recurring rates that apply each month or fraction thereof that a Special Access Service is provided. For billing purposes, each month is considered to have 30 days.

(B) Daily Rates

Daily rates are recurring rates that apply to each 24 hour period or fraction thereof that a Program Audio or Video Special Access Service is provided for part-time use. For purposes of applying daily rates, the 24 hour period is not limited to a calendar day.

Part-time Video or Program Audio Service provided within a consecutive 30 day period will be charged the daily rate, not to exceed an amount equal to the monthly rate. For each subsequent day or part day, a charge equal to 1/30th of the monthly rate shall apply.

7. Special Access Service (Cont'd)

7.2 Rate Regulations (Cont'd)

7.2.2 Types of Rates and Charges (Cont'd)

(C) Nonrecurring Charges

Nonrecurring charges are one-time charges that apply for specific work activity (i.e., installation or change to an existing service). The types of nonrecurring charges that apply for Special Access Service are: installation of service, installation of optional features and functions, and service rearrangements.

(1) Installation of Service

Nonrecurring charges apply to each service installed. The nonrecurring charges for the installation of service are set for each channel type as a nonrecurring charge for the Channel Termination.

(2) Installation of Optional Features and Functions

Nonrecurring charges apply for the installation of some of the optional features and functions available with Special Access Service. The charge applies whether the feature or function is installed coincident with the initial installation of service or at any time subsequent to the installation of the service.

The optional features for which nonrecurring charges apply are:

- Voice Grade Data Capability
- Voice Grade Telephoto Capability
- Program Audio Gain Conditioning

7. Special Access Service (Cont'd)

7.2 Rate Regulations (Cont'd)

7.2.2 Types of Rates and Charges (Cont'd)

(C) Nonrecurring Charges (Cont'd)

(3) Service Rearrangements

Service rearrangements are changes to existing (installed) services which may be administrative only in nature, as set forth following, or that involve actual physical change to the service. Changes to pending orders are set forth in 5.2.2 preceding.

Changes in the physical location of the point of termination or customer designated premises are moves as set forth in 7.2.3 following.

Changes in the type of Service or Channel Termination which result in a change of the minimum period requirement will be treated as a discontinuance of the service and an installation of a new service.

Customers with DS3 service provided under Individual Case Basis (ICB) in other portions of this tariff or with a month-to-month billing period who wish to convert their DS3 service to a 1, 3 or 5 year billing period, may do so without penalty or assessment of new nonrecurring charges, providing there is no physical change in the service arrangement.

Changes in ownership or transfer of responsibility from one customer to another will be treated as a discontinuance of the service and an installation of a new service. In the event the change in ownership or transfer of responsibility as set forth in 2.1.2(A) preceding where there is no change in facilities or arrangements, the change will be treated as an administrative change without charge to the customer.

7. Special Access Service (Cont'd)

7.2 Rate Regulations (Cont'd)

7.2.2 Types of Rates and Charges (Cont'd)

(C) Nonrecurring Charges (Cont'd)

(3) Service Rearrangements (Cont'd)

(a) Administrative changes will be made without charge(s) to the customer. Administrative changes are as follows:

- Change of customer name,
- Change of customer or customer's end user premises address when the change of address is not a result of a physical relocation of equipment,
- Change in billing data (name, address, or contact name or telephone number),
- Change of agency authorization,
- Change of customer circuit identification,
- Change of billing account number,
- Change of customer test line number,
- Change of customer or customer's end user contact name or telephone number, and
- Change of jurisdiction.

(b) All other service rearrangements will be charged for as follows:

- If the change involves the addition of other customer designated premises to an existing multipoint service, the nonrecurring charge for the channel termination rate element will apply. The charge(s) will apply only for the location(s) that is being added.

7. Special Access Service (Cont'd)

7.2 Rate Regulations (Cont'd)

7.2.2 Types of Rates and Charges (Cont'd)

(C) Nonrecurring Charges (Cont'd)

(3) Service Rearrangements (Cont'd)

(b) (Cont'd)

- If the change involves the addition of an optional feature or function which has a separate nonrecurring charge, that nonrecurring charge will apply.

- If the change involves changing the type of signaling on a Voice Grade service, a charge equal to the Voice Grade channel termination rate element nonrecurring charge will apply. The charge will apply per service termination affected.

- If the change involves the rearrangement of existing Voice Grade Service to a Multiplexed High Capacity service and there is no change of customer premises location(s), a charge equal to one-half the Voice Grade channel termination rate element nonrecurring charge will apply. The charge will be per service termination affected.

- Except for moves stated in 7.2.3 following, all other changes, including the addition of optional feature or function without a separate nonrecurring charge, a charge equal to a channel termination nonrecurring charge will apply. Only one such charge will apply per service, per change.

- If a Special Access change involves changing a Multiplexer Cross Connect it will be considered to be a discontinuance and installation of the Multiplexer Cross Connect and all applicable nonrecurring charges shall apply. (N) | (N)

7. Special Access Service (Cont'd)

7.2 Rate Regulations (Cont'd)

7.2.2 Types of Rates and Charges (Cont'd)

(C) Nonrecurring Charges (Cont'd)

(3) Service Rearrangements (Cont'd)

(c) DS1/DS3 Rollover Charges

Rollover Charges are physical changes to, or reclassification of existing service, where there is no change in either point of termination or the Expanded Interconnection Service (EIS) point of termination. Except as noted below, all facilities and equipment required for the activity must already exist. The following are examples where DS1/DS3 Rollover Charges will apply:

- Rearranging an existing Special Access DS1 or DS3 service from one port to another port in the same multiplexer.

- Rearranging an existing Special Access DS1 or DS3 service from one multiplexer to another multiplexer in the same serving wire center.

- Rearranging an exiting Special Access DS1 or DS3 Channel Termination to a port of an existing multiplexed higher speed service in the same serving wire center.

- Rearranging an existing Special Access DS1 or DS3 Channel Termination to an EIS DS1 or DS3 Channel Termination in the same serving wire center.

- Rearranging an existing lower speed service to an existing multiplexed higher speed service.

In the event a change involves a physical move of the point of termination at the customer's premises or a move of the customer's premises, a move charge as set forth in 7.2.3 will apply.

Rollover Charges are set forth in 7.11.5(D) following. No charge will apply for subtending services of the service being rolled over as long as there is no change to the subtending services.

7. Special Access Service (Cont'd)

7.2 Rate Regulations (Cont'd)

7.2.3 Moves

A move involves a change in the physical location of one of the following:

- The Point of Termination at the customer's premises
- The customer's premises

The charges for the move are dependent on whether the move is to a new location within the same building or to a different building.

(A) Moves Within the Same Building

When the move is to a new location within the same building or a change of connecting facility assignment in the same central office other than DS1 and DS3 rollover rearrangements as described in 7.2.2(C)(3)(c) preceding, the charge for the move will be an amount equal to one half of the nonrecurring (i.e., installation) charge for the service termination affected. There will be no change in the minimum period requirements.

(B) Moves To a Different Building

Moves to a different building will be treated as a discontinuance and start of service and all associated nonrecurring charges will apply. New minimum period requirements will be established for the new services. The customer will also remain responsible for satisfying all outstanding minimum period charges for the discontinued service.

7.2.4 Minimum Periods

The minimum service period for all services is one month, except DS3 High Capacity Service under a 1, 3 or 5 year billing period, and part-time Video and Program Audio services.

(A) The minimum service period for part-time Video and Program Audio services is one day (i.e., a continuous 24-hour period, not limited to a calendar day). (T)

(B) The minimum service period for DS3 (44.746 Mpbs) High Capacity Special Access Service is a 1 year term plan. After the 1-, 3-, or 5-year billing period is satisfied, the customer must select a renewal option as referenced in Section 7.11.5.1. (N) (N)

(This page filed under Transmittal No. 55)

7. Special Access Service (Cont'd)

7.2 Rate Regulations (Cont'd)

7.2.5 Mileage Measurement

The mileage to be used to determine the monthly rate for the Channel Mileage Facility is calculated on the airline distance between the locations involved, i.e., the serving wire centers associated with two customer designated premises, a serving wirecenter associated with a customer designated premises and a Telephone Company hub, two Telephone Company hubs or between the serving wire center associated with a customer designated premises and a WATS Serving Office. The serving wire center associated with a customer designated premises is the serving wire center from which this customer designated premises would normally obtain dial tone.

Mileage charges are shown with each channel type. To determine the rate to be billed, first compute the mileage using the V&H coordinates method, as set forth in the NATIONAL EXCHANGE CARRIER ASSOCIATION TARIFF F.C.C. NO. 4, then multiply the resulting number of miles times the Channel Mileage Facility per mile rate, and add the Channel Mileage Termination rate for each termination. When the calculation results in a fraction of a mile, always round up to the next whole mile before determining the mileage and applying the rates. (T)

When hubs are involved, mileage is computed and rates applied separately for each section of the Channel Mileage, i.e., customer designated premises serving wire center to hub, hub to hub and/or hub to customer designated premises serving wire center. However, when any service is routed through a hub for purposes other than customer specified bridging or multiplexing (e.g., the Telephone Company chooses to so route for test access purposes), rates will be applied only to the distance calculated between the serving wire centers associated with the customer designated premises.

7. Special Access Service (Cont'd)

7.2 Rate Regulations (Cont'd)

7.2.6 Facility Hubs

A customer has the option of ordering Voice Grade service or High Capacity services (i.e., DS1, DS1C, DS2, DS3 or DS4) to a facility hub for channelizing to individual services requiring lower capacity facilities (e.g., Voice, Program Audio, etc.).

Different locations may be designated as hubs for different facility capacities, e.g., multiplexing from digital to digital may occur at one location while multiplexing from digital to analog may occur at a different location. When placing an Access Order the customer will specify the desired hub. EXCHANGE CARRIER ASSOCIATION TARIFF F.C.C. NO. 4 identifies serving wire centers, hub locations and the type of multiplexing functions available.

Some of the types of multiplexing available include the following:

- from higher to lower bit rate
- from higher to lower bandwidth
- from digital to voice frequency channels

Point to point services may be provided on channels of these services to a hub. The transmission performance for the point to point service provided between customer designated premises will be that of the lower capacity or bit rate. For example, when a 1.544 Mbps channel is multiplexed to voice frequency channels, the transmission performance of the channelized services will be Voice Grade, not High Capacity.

7. Special Access Service (Cont'd)

7.2 Rate Regulations (Cont'd)

7.2.6 Facility Hubs (Cont'd)

The Telephone Company will commence billing the monthly rate for the service to the hub on the date specified by the customer on the Access Order. Individual channels utilizing these services may be installed coincident with the installation of the service to the hub or may be ordered and/or installed at a later date, at the option of the customer. The customer will be billed for a Voice Grade or a High Capacity Channel Termination, Channel Mileage (when applicable), and the multiplexer at the time the service is installed. Individual service rates (by service type) will apply for a Channel Termination and additional Channel Mileage (as required) for each channelized service. These will be billed to the customer as each individual service is installed.

Cascading multiplexing occurs when a High Capacity service is de-multiplexed to provide channels with a lesser capacity and one of the lesser capacity channels is further de-multiplexed. For example, a 6.312 Mbps High Capacity service is de-multiplexed to four DS1 channels and then one of the DS1 channels is further de-multiplexed to 24 individual Voice Grade channels.

When cascading multiplexing is performed, whether in the same or a different hub, a charge for the additional multiplexing unit also applies. When cascading multiplexing is performed at different hubbing locations, Channel Mileage charges also apply between the hubs.

7. Special Access Service (Cont'd)

7.2 Rate Regulations (Cont'd)

7.2.6 Facility Hubs (Cont'd)

The Telephone Company will designate hubs for Video and Program Audio Services. Full-time or part-time service may be provided between customer designated premises or between a customer designated premises and a hub and billed accordingly at the monthly rates set forth in 7.8 and 7.9 following for a Channel Termination, Channel Mileage and Optional Features and Functions, as applicable. When the service is ordered to a hub, the customer may order a full-time or part-time Video and Program Audio services as needed between that hub and additional customer designated premises. The rate elements required to provide the part-time service (i.e., Channel Termination, Channel Mileage and Optional Features and Functions, as applicable) will be billed at daily rates for the duration of the service requested.

7.2.7 Shared Use Analog and Digital High Capacity Services

Shared use refers to a rate application applicable only when the customer orders High Capacity facilities between a customer designated premises and a Telephone Company hub where the Telephone Company performs multiplexing/demultiplexing functions and the same customer then orders the derived channels as Special and Switched Access Services.

The High Capacity facility will be ordered, provided and rated as Special Access Service (i.e., Channel Termination, Channel Mileage, as appropriate, and Multiplexing Arrangement). The nonrecurring charge that applies when the shared use facility is installed will be the nonrecurring charge associated with the appropriate Special Access High Capacity Channel Termination. Rating as Special Access will continue until such time as the customer chooses to use a portion of the available capacity for Switched Access Service. Individual service (i.e., Switched or Special Access) nonrecurring charges will not apply to the individual channels of the shared use facility.

Shared use is permitted with Expanded Interconnection Service described in Section 18.1.2 following.

7. Special Access Service (Cont'd)

7.2 Rate Regulations (Cont'd)

7.2.7 Shared Use Analog and Digital High Capacity Services (Cont'd)

When Special Access Service is provided utilizing a channel of the shared use facility to a hub, High Capacity rates and charges will apply for the facility to the hub, as set forth preceding, and individual service rates and charges will apply from the hub to the customer designated premises. The rates and charges that will apply to the portion from the hub to the customer designated premises will be dependent on the specific type of Special Access Service that is provided (e.g., Voice Grade, Telegraph, etc.). The applicable rates and charges will include a Channel Termination and Channel Mileage, if applicable. Rates and charges for optional features and functions associated with the service, if any, will apply for the appropriate channel type.

As each individual channel is activated for Switched Access Service, the High Capacity Special Access Channel Termination and Channel Mileage rates will be reduced accordingly (e.g., 1/24th for a DS1service, 1/672nd for DS-3 service, etc.). In addition, if multiplexing is associated with the service under optional features and functions, the multiplexor rate will also be reduced accordingly. Switched Access Service rates and charges, as set forth in 6.8 preceding, will apply for each channel of the shared use facility that is used to provide a Switched Access Service.

The customer must place an order for each individual Switched or Special Access Service utilizing the Shared Use Facilities and specify the channel assignment for each such service.

7. Special Access Service (Cont'd)

7.2 Rate Regulations (Cont'd)

7.2.8 Extension of WATS Access Service

WATS Access Service is available with extensions, i.e., additional terminations, of the service at different customer designated premises in the same or different LATAs. Extensions are provided and charged for as separate Voice Grade Special Access Service. The rate elements which apply are: WATS Access Line Channel Termination, Channel Mileage, if applicable, and Signaling Capability (Optional Features and Functions), if applicable. All appropriate charges as set forth in 7.7.6 following will apply.

7. Special Access Service (Cont'd)

7.3 Surcharge for Special Access Service

7.3.1 General

Special access services provided under this tariff may be subject to the monthly Special Access Surcharge. (T)

7.3.2 Application

(A) The Special Access Surcharge will apply to each interstate Special Access Service that terminates on an end user's PBX or other device where, through a function of the device, the Special Access Service interconnects to the local exchange network. Interconnection functions include, but are not limited to, wiring and software functions, bridging, switching or patching of calls or stations. The Surcharge will apply irrespective of whether the interconnection function is performed in equipment located at the customer's premises or in a Centrex Co-type switch.

(B) Special Access Service will be exempted from the Surcharge by the Telephone Company upon receipt of the customer's written certification for the following Special Access Service terminations:

(1) an open-end termination in a Telephone Company switch of an FX line, including CCSA and CCSA-equivalent ONALs; or

(2) an analog channel termination that is used for radio or television program transmission; or

(3) a termination used for TELEX service; or

(4) a termination that by the nature of its operating characteristics could not make use of Telephone Company common lines such as, terminations which are restricted through hardware or software; or

(This page filed under Transmittal No. 4)

7. Special Access Service (Cont'd)

7.3 Surcharge for Special Access Service (Cont'd)

7.3.2 Application (Cont'd)

(B) (Cont'd)

(5) a termination that interconnects either directly or indirectly to the local exchange network where the usage is subject to Carrier Common Line charges such as, where the Special Access Service accesses only FGA and no local exchange lines, or Special Access Service between customer points of termination, or Special Access Service connecting CCSA or CCSA-type equipment (inter-machine trunks); or

(6) a termination that the customer certifies to the Telephone Company is not connected to a PBX or other device which interconnects the Special Access Service to a local exchange subscriber line.

7.3.3 Exemption of Special Access Service

(A) Special Access Services which are terminated as set forth in 7.3.2(B) preceding will be exempted from the Special Access Surcharge if the customer provides the Telephone Company with written exemption certification. The certification may be provided to the Telephone Company (1) at the time the Special Access Service is ordered or installed; (2) at such time as the service is reterminated to a device which does not interconnect to the service to local exchange facilities, or (3) at such time as the service becomes associated with a Switched Access Service that is subject to Carrier Common Line Charges.

7. Special Access Service (Cont'd)

7.3 Surcharge for Special Access Service (Cont'd)

7.3.3 Exemption of Special Access Service (Cont'd)

(B) The exemption certification is to be provided by the customer ordering the service. The certification must be signed by the customer or authorized representative and include the category of exemption, as set forth in 7.3.2(B) preceding, for each termination, and the date which the exemption is effective.

(C) The customer shall also notify the Telephone Company when an exempted Special Access Service is changed or reterminated such that the exemption is no longer applicable.

(D) The Telephone Company will work cooperatively with the customer to resolve any questions regarding the exemption certification. In addition, the Telephone Company may withhold exemption of the service until the questions are resolved.

7.3.4 Rate Regulations

(A) The Surcharge will apply as set forth in 7.3.2(A) preceding, except that a surcharge will be assessed on a per voice grade equivalent basis for Special Access Services derived from High Capacity Special Access Services as shown in the following example:

Special Access Service	Voice Grade Equivalent		Surcharge		Monthly Charge
DS1	24	X	$25.00	=	$600.00

In the case of multipoint Special Access Services, one Special Access Surcharge will apply for each termination of a Special Access Channel at an end user's premises.

(This page filed under Transmittal No. 1)

7. Special Access Service (Cont'd)

7.3 Surcharge for Special Access Service (Cont'd)

7.3.4 Rate Regulations (Cont'd)

(B) The Telephone Company will bill the appropriate Special Access Surcharge to the ordering customer for each interstate Special Access Service installed unless exemption certification is provided as set forth in 7.3.3 preceding.

(C) If a written certification is not received at the time the Special Access Service is obtained, the Surcharge will be applied. Exempt status will become effective on the certification date indicated by the customer, subject to the regulations set forth in (D) following.

(D) Crediting the Surcharge

The Telephone Company will cease billing the Special Access Surcharge when certification, as set forth in 7.3.3 preceding, is received. If the status of the Special Access Service was changed prior to receipt of the exemption certification, the Telephone Company will credit the customer's account, not to exceed ninety (90) days, based on the effective date of the change as specified by the customer in the letter of certification.

(E) Surcharge Payment Deferral Provision

The Telephone Company will bill the surcharge on Special Access facilities in service as of June 1, 1986, used in the provision of WATS or WATS-type service through a Telephone Company designated WATS Serving Office (WSO). Payment of such surcharge may be deferred, without penalty, for up to ninety (90) days from the date of the first bill rendered for the Special Access Surcharge.

7. Special Access Service (Cont'd)

7.3 Surcharge for Special Access Service (Cont'd)

7.3.4 Rate Regulations (Cont'd)

(E) Surcharge Payment Deferral Provision (Cont'd)

If appropriate exemption certification is not received by the Telephone Company by the end of the ninety (90) days deferral period, the billed Special Access Surcharge will become due. These charges, if unpaid, will be subject to a late payment charge as set forth in Section 2.4.1(B)(2) preceding.

7.3.5 Rate

	USOC	Monthly Rate
Surcharge for Special Access Service - Per Voice Grade Equivalent	S25	$25.00

7. Special Access Service (Cont'd)

7.4 Message Station Equipment Recovery Charge

7.4.1 General

The Message Station Equipment Recovery Charge is a charge to recover that portion of message station equipment that is assigned to Special Access Service. (T)

Pursuant to CC Docket 83-1145 Memorandum Opinion and Order adopted by the Federal Communications Commission on November 8, 1984, and released on November 9, 1984, this charge is assessed only to those customers to which the Special Access Surcharge, as set forth in 7.3 preceding, applies.

7.4.2 Rate

	USOC	Monthly Rate
Message Station Equipment Recovery Charge - Per Special Access Surcharge Assessed	UTM	$0.00

7. Special Access Service (Cont'd)

7.5 Reserved for Future Use

(This page filed under Transmittal No. 1)

7. Special Access Service (Cont'd)

7.6 Digital Data Over Voice

7.6.1 Basic Channel Description

A Digital Data Over Voice (DDOV) service allows the simultaneous transmission of either synchronous or asynchronous data at the speed of 9.6 kbps. A DDOV Channel Termination is provided as a derived channel of a customer's existing local exchange voice grade service local loop facility. The customer may transmit data over the DDOV service simultaneously with a voice transmission. The customer must provide a compatible data voice multiplexer at the designated customer premises.

DDOV is provided where suitable local loop facilities are available subject to the transmission limitations of the facilities and equipment used by the Telephone Company.

The end user must have a single party, analog voice band, local exchange telephone line in service at the time the order of the DDOV is placed.

DDOV must be ordered in conjunction with High Capacity Multiplexing, DS1 to Voice/Digital as set forth in 7.11.4(B)(5) following.

7.6.2 Technical Specifications Packages

The technical specifications for DDOV service and the customer-provided data voice multiplexer are delineated in the appropriate Technical Reference for DDOV service listed in Section 7.1.2(F).

7.6.3 Channel Interfaces

Compatible channel interfaces are set forth in the appropriate Technical Reference for DDOV service listed in Section 7.1.2(F).

7.6.4 Optional Features and Functions

There are no optional features and functions available with DDOV service.

7. Special Access Service (Cont'd)

7.6 Digital Data Over Voice (Cont'd)

7.6.5 Rates and Charges

(A) Channel Termination	USOC	Monthly Rate	Nonrecurring Rate
- Per Termination			
- 9.6 kbps	T6OVS	$38.00	$482.53

(B) Channel Mileage

Channel Mileage will be charged at the corresponding channel mileage rates for Digital Data Service in Section 7.10.5(B)following.

(This page filed under Transmittal No. 1)

7. Special Access Service (Cont'd)

7.7 Voice Grade Service

7.7.1 Basic Channel Description

A Voice Grade channel is a channel which provides voice frequency transmission capability in the nominal frequency range of 300 to 3000 Hz and may be terminated two-wire or four-wire. Voice Grade channels are provided between customer designated premises, between a customer designated premises and a Telephone Company hub or hubs, or between a customer designated premises and a WATS Serving Office (WSO).

7.7.2 Technical Specifications Packages

	Package VG-												
Parameter	C*	1	2	3	4	5	6	7	8	9	10	11	W
Attentuation Distortion	X	X	X	X	X	X	X	X	X	X	X	X	X
C-Message Noise	X	X	X	X	X	X	X	X	X	X	X	X	X
Echo Control	X	X	X	X		X		X	X			X	X
Envelope Delay Distortion	X						X	X	X	X	X	X	X
Frequency Shift	X						X	X	X	X	X	X	X
Impulse Noise	X					X	X	X	X	X	X	X	X
Intermodulation Distortion	X						X	X	X	X	X	X	X
Loss Deviation	X	X	X	X	X	X	X	X	X	X	X	X	X
Phase Hits, Gain Hits, and Dropouts	X												
Phase Jitter	X						X	X	X	X	X	X	X
Signal-to-C Message Noise					X								
Signal-to-C Notch Noise	X					X	X	X	X	X	X	X	X

* The desired parameters are selected by the customer from the list of available parameters.

(This page filed under Transmittal No. 1)

7. Special Access Service (Cont'd)

7.7 Voice Grade Service (Cont'd)

7.7.2 Technical Specifications Packages (Cont'd)

The technical specifications for these parameters (except for dropouts, gain hits, and phase hits) are delineated in Technical Reference TR-NPL-000334, TR-NPL-000335 and associated Addendum. The technical specifications for dropouts, phase hits, and gain hits are delineated in Technical Reference PUB 41004, Table 4.

7.7.3 Channel Interfaces

The following channel interfaces for Voice Grade service do not require signaling capability: AH, DA, DB, DD, DE, DM, DS, NO, PR and TF.

The following channel interfaces for Voice Grade service require signaling capability: AB, AC, CT, DX, DY, EA, EB, EC, EX, GO, GS, LA, LB, LC, LO, LR, LS, RV and SF.

Compatible channel interfaces are set forth in 15.3 following.

7.7.4 Optional Features and Functions

(A) Central Office Bridging Capability

(1) Voice Bridging (two-wire and four-wire)

(2) Data Bridging (two-wire and four-wire)

7. Special Access Service (Cont'd)

7.7 Voice Grade Service (Cont'd)

7.7.4 Optional Features and Functions (Cont'd)

(B) Conditioning

Conditioning provides more specific transmission characteristics for Voice Grade services. C-Type conditioning controls attenuation distortion and envelope delay distortion. Sealing Current helps maintain continuity on dry metallic loops.

For two-point services, the parameters apply to each service. For multipoint services, the parameters apply to each mid-link or end link. C-Type conditioning and Data Capability may be combined on the same service.

In addition, a customer may desire that either the attenuation distortion or the envelope delay distortion, or both, be improved to more stringent specifications than those provided for standard C-Type conditioning. In such cases the customer has the option of ordering either Improved Attenuation Distortion or Improved Envelope Delay Distortion, or both, as desired.

(1) C-Type Conditioning

C-Type Conditioning is provided for the additional control of attenuation distortion and envelope delay distortion on data services. The attenuation distortion and envelope delay distortion specifications for C-Type Conditioning are delineated in Technical Reference TR-NPL-000335.

7. Special Access Service (Cont'd)

7.7 Voice Grade Service (Cont'd)

7.7.4 Optional Features and Functions (Cont'd)

(B) Conditioning (Cont'd)

(2) Improved Attenuation Distortion *

Improved Attenuation Distortion upgrades the frequency versus loss limits of the channel. The technical specifications for Improved Attenuation Distortion are delineated in Technical Reference TR-NPL-000335.

(3) Improved Envelope Delay Distortion *

Improved Envelope Delay Distortion upgrades the frequency versus delay response limits of the channel. The technical specifications for Improved Envelope Delay Distortion are delineated in Technical Reference TR-NPL-000335.

* Improved Attenuation Distortion and Improved Envelope Delay Distortion will continue to be provided to all customers who were provided with either or both of these optional features in conjunction with C-Type Conditioning prior to September 29, 1988.

(This page filed under Transmittal No. 1)

7. Special Access Service (Cont'd)

7.7 Voice Grade Service (Cont'd)

7.7.4 Optional Features and Functions (Cont'd)

(B) Conditioning (Cont'd)

(4) Sealing Current Conditioning

Sealing Current Conditioning is provided to help maintain continuity on dry loops. It is usually associated with four-wire DA or NO type channel interfaces.

(C) Customer Specified Premises Receive Level

This option allows the customer to specify the receive level at the Point of Termination. The level must be within a specific range on effective four-wire transmission. The ranges are delineated in Technical Reference TR-NPL-000335.

(D) Improved Return Loss

(1) On Effective Four-Wire Transmission at Four-Wire Point of Termination (applicable to each two-wire port): Provides for a fixed 600 ohm impedance, variable level range and simplex reversal. Telephone Company equipment is required at the customer's premises where this option is ordered. The Improved Return Loss parameters are delineated in Technical Reference TR-NPL-000335.

(2) On Effective Two-Wire Transmission at Two-Wire Point of Termination: Provides for more stringent Echo Control specifications. In order for this option to be applicable, the transmission path must be four-wire at one POT and two-wire at the other POT. Placement of Telephone Company equipment may be required at the customer’s premises with the two-wire POT. The Improved Return Loss parameters are delineated in Technical Reference TR-NPL-000335.

7. Special Access Service (Cont'd)

7.7 Voice Grade Service (Cont'd)

7.7.4 Optional Features and Functions (Cont'd)

(E) Data Capability (D Conditioning)

Data Capability provides transmission characteristics suitable for data communications. Specifically, Data Capability provides for the control of Signal to C-Notched Noise Ratio and intermodulation distortion. It is available for two-point services or three-point multipoint services.

The Signal to C-Notched Noise Ratio and intermodulation distortion parameter for Data Capability are:

- Signal to C-Notched Noise Ratio is equal to or greater than 32dB
- Intermodulation distortion:
- Signal to second order modulation products (R2) is equal to or greater than 38dB.
- Signal to third order modulation products (R3) is equal to or greater than 42 dB

When a service equipped with Data Capability is used for voice communications, the quality of the voice transmission may not be satisfactory.

(F) Telephoto Capability

Telephoto Capability provides transmission characteristics suitable for telephotographic communications. Specifically, Telephoto Capability is provided for the control of attenuation distortion and envelope delay distortion on telephotographic services. The attenuation distortion and envelope delay distortion parameters for Telephoto Capability are:

7. Special Access Service (Cont'd)

7.7 Voice Grade Service (Cont'd)

7.7.4 Optional Features and Functions (Cont'd)

(F) Telephoto Capability (Cont'd)

Attenuation Distortion (1004Hz Reference)		Envelope Delay Distortion	
Frequency Range (Hz)	Variation (dB)	Frequency Range (Hz)	Variation (mcs)
500-3000	-0.5 to +1.5	1000-2600	110
300-3200	-1.0 to +2.5	800-2800	180

(G) Signaling Capability

Signaling Capability provides for the ability to transmit signals from one customer premises to another customer premises on the same service.

(H) Public Packet Switching Network (PPSN) Interface Arrangement[1] (C)

An arrangement that provides the interface requirements that permit a Voice Grade service to interface with a Public Packet Switching Network packet switch located in a Telephone Company premises. The interface is compatible with X.25 and X.75 packet switching protocols as defined by the CCITT.

(1) As of October 6, 2004, PPSN Interface Arrangement service utilizing the (N)
X.25 protocol and the X.75 protocol is obsolete and limited to existing (N)
installations, at existing locations, for existing customers. (N)

7. Special Access Service (Cont'd)

7.7 Voice Grade Service (Cont'd)

7.7.4 Optional Features and Functions (Cont'd)

(I) Four-Wire/Two-Wire Conversions

When a customer requests that an effective four-wire channel be terminated with a two-wire channel interface at the customer designated premises, a four-wire to two-wire conversion is required. The rate for the conversion is included as part of the basic Channel Termination rate.

(J) Improved Two-Wire Voice Transmission

(1) Loss Deviation

The maximum Loss Deviation of the 1004 HZ loss relative to the Expected measured Loss (EML) is -4.0 dB to +4.0 dB.

(2) Attenuation Distortion

The maximum Attenuation Distortion in the 404 to 280 Hz frequency band relative to loss at 1004 Hz is -2.0 dB to +6.0 dB.

(3) C-Message Noise

The maximum C-Message Noise for the transmission path at the route miles listed is less than:

Route Miles	C-Message Noise
less than 50	35 dBrnco
51 to 100	37 dBrnco
101 to 200	40 dBrnco
201 to 400	43 dBrnco
401 to 1000	45 dBrnco

7. Special Access Service (Cont'd)

7.7 Voice Grade Service (Cont'd)

7.7.4 Optional Features and Functions (Cont'd)

(J) Improved Two-Wire Voice Transmission (Cont'd)

(4) Return Loss

The Return Loss, expressed as Echo Return Loss (ERL) and Singing Return Loss (SRL), is equal to or greater than:

ERL	13.0 dB
SRL	6.0 dB

The rate for the provision of Improved Two-Wire Voice Transmission is included as part of the basic Channel Termination rate.

7. Special Access Service (Cont'd)

7.7 Voice Grade Service (Cont'd)

7.7.4 Optional Features and Functions (Cont'd)

The following table shows the technical specifications packages with which the optional features and functions are available.

	Available with Technical Specifications Package VG-												
	C	1	2	3	4	5	6	7	8	9	10	11	W
C-Type Conditioning	X					X	X	X	X	X	X		
Central Office Bridging Capability	X		X			X	X				X	X	
Customer Specified Premises Receive Level	X		X	X				X	X	X			
Data Capability	X						X	X			X		
Improved Return Loss For Effective Four-Wire Transmission	X	X	X	X	X	X	X	X	X	X	X	X	
For Effective Two-Wire Transmission	X		X	X				X					
Improved Two-Wire Voice Transmission													X
PPSN Interface Arrangement[1]	X									X			
Sealing Current Conditioning	X						X						
Signaling Capability	X	X	X	X				X	X	X			
Telephoto Capability	X											X	

(C)

(1) As of October 6, 2004, PPSN Interface Arrangement service utilizing the X.25 protocol and the X.75 protocol is obsolete and limited to existing installations, at existing locations, for existing customers. (N) (N) (N)

7. Special Access Service (Cont'd)

7.7 Voice Grade Service (Cont'd)

7.7.5 WATS Access Line (WAL) Service

(A) Basic Channel Description

A WATS Access Line service provides a service for voice frequency transmission capability. The service provides a connection between a customer designated premises and a WATS serving office associated with the closed end of 800 Service or WATS. Originating access is provided with Feature Group C or D Switched Access Service as set forth in Section 6 preceding. Terminating access is provided with Feature Group A, B, C, or D as set forth in Section 6 preceding.

WAL Service can be arranged for screening, blocking and directionality at the option of the customer and where available. It is provided with either rotary dial or dual tone multifrequency address signaling and either loop start, ground start, E&M, or reverse battery supervisory signaling. The choice of the type of signaling is at the option of the customer and subject to the technical limitations identified in the Technical Reference TR-NPL-000334. WATS Access Line Service is provided as an effective two-wire, or an effective four-wire transmission path.

WAL Service is provided for interstate communications only. All originating intrastate intraLATA calls will be blocked.

7. Special Access Service (Cont'd)

7.7 Voice Grade Service (Cont'd)

7.7.5 WATS Access Line (WAL) Service (Cont'd)

(A) Basic Channel Description (Cont'd)

The following diagram depicts a WATS Access Line service.

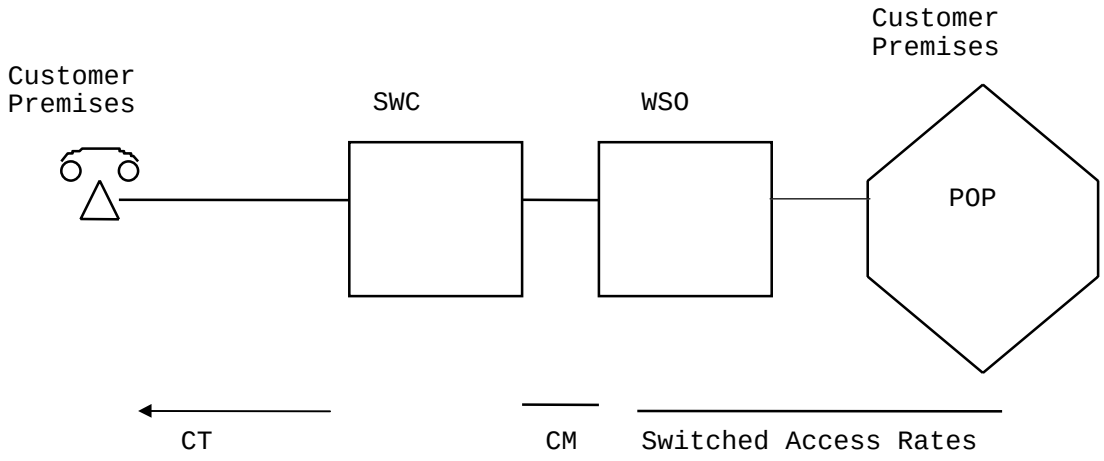

CT - Channel Termination
CM - Channel Mileage
SWC - Serving Wire Center
WSO - WATS Serving Office
POP - Point of Presence

Applicable Rate elements are:

CT - Channel Termination (1 applicable)
CM - Channel Mileage
- Optional Features and Functions when ordered (per channel termination).

(B) Technical Specifications

Technical specifications and examples of application are delineated in Technical Reference TR-NPL-000334.

(C) Channel Interfaces

Compatible channel interfaces are set forth in Technical Reference TR-NPL-OOO334.

(This page filed under Transmittal No. 1)

7. Special Access Service (Cont'd)

7.7 Voice Grade Service (Cont'd)

7.7.5 WATS Access Line (WAL) Service (Cont'd)

(D) Optional Features and Functions

(1) Improved two-wire voice transmission specifications

(2) Certain other options associated with WAL services are as either Line Termination or Common Switching optional features as defined in Section 6 preceding.

(3) WATS Access Lines use the same Features and Functions as Voice Grade Service.

The following table shows the services with which the Optional Features and Functions are available.

	Available with Technical Specifications Package WALS-					
	EA	EB	ED	EG	FA	FJ
Effective 2-Wire	X				X	X
Effective 4-Wire		X		X		
Improved 2-Wire Voice Transmission				X	X	
Improved Return Loss 2-Wire						X
Digital DS1			X			
Bridging Capability	X	X		X	X	X

(This page filed under Transmittal No. 1)

ACCESS SERVICE

7. Special Access Service (Cont'd)

7.7 Voice Grade Service (Cont'd)

7.7.6 Rates and Charges

	USOC	Monthly Rate	Non-Recurring Charge
(A) Channel Termination			
- Per Termination			
- Two-Wire	T6E2X	$21.00(I)	$200.00
- Four-Wire	T6E4X	$21.00(I)	$200.00
- WATS Access Line			
- Per point of termination			
- Two-Wire with screening and blocking	X2W	$21.00(I)	$200.00
- Four-Wire with screening and blocking	X4W	$21.00(I)	$200.00

(B) Channel Mileage

	USOC	Monthly Rate
(1) Channel Mileage Facility - Per Mile	1L5XX/CMF	$0.44(R)
(2) Channel Mileage Termination - Per Termination	1L5XX/CMT	$8.90

Rates contained in this transmittal are subject to subsequent adjustment, effective retrospectively, in the event the Commission or a court subsequently authorizes Nevada to correct its rates pursuant to pending motions, or petitions for reconsideration or waiver, or in the event of any other adjustment to an order of the Commission or a court.

(This page filed under Transmittal No. 67)

7. Special Access Service (Cont'd)

7.7 Voice Grade Service (Cont'd)

7.7.6 Rates and Charges (Cont'd)

(C) Optional Features and Functions

(1) Bridging

(a) Voice Bridging

	USOC	Monthly Rate
Two-Wire/Four Wire		
- Per port		
- Two-Wire	BCNV2	$2.72
- Four-Wire	BCNV4	$3.42

(b) Data Bridging

Two-Wire/Four-Wire		
- Per Port		
- Two-Wire	BCND2	$2.72
- Four-Wire	BCND4	$3.42

7. Special Access Service (Cont'd)

7.7 Voice Grade Service (Cont'd)

7.7.6 Rates and Charges (Cont'd)

(C) Optional Features and Functions (Cont'd)

	USOC	Monthly Rate	Non-recurring Charges	(T)
(2) Conditioning				
- Per Termination				
- C-Type	X1CPT	$ 3.79	None	
- Improved Attenuation Distortion*	UHW	5.37	$180.80	
- Improved Envelope Delay Distortion*	UHY	26.83	287.06	(T)
- Sealing Current	1HBPT	6.97	None	

* Improved Attenuation Distortion and Improved Envelope Delay Distortion will continue to be provided to all customers who were provided with either or both of these optional features in conjunction with C-Type Conditioning prior to September 29, 1988. (T)

(This page filed under Transmittal No. 4)

ACCESS SERVICE

7. Special Access Service (Cont'd)

7.7 Voice Grade Service (Cont'd)

7.7.6 Rates and Charges (Cont'd)

(C) Optional Features and Functions (Cont'd)

	USOC	Monthly Rate	Non recurring Charges
(3) Improved Return Loss for Effective Two-Wire or Four-Wire Transmission			
- Per termination			
- Two-Wire	1RL2W	$ 8.24	None
- Four-Wire	1RL4W	8.20	None
(4) Customer Specified Received Level -Per two-wire termination	RLS	4.61	None
(5) Data Capability - Per termination	XDCPT	5.67	$ 91.27
(6) Telephoto Capability - Per termination	XTCPT	7.40	$377.67

(This page filed under Transmittal No. 1)

7. Special Access Service (Cont'd)

7.7 Voice Grade Service (Cont'd)

7.7.6 Rates and Charges (Cont'd)

(C) Optional Features and Functions (Cont'd)

	USOC	Monthly Rate
(7) Signaling Capability - Per termination	XSS++	$ 9.94

In lieu of ++, substitute appropriate two digit code from the following list to specify type of signaling.

AB
AC
CT
DX
DY
EA
EB
EC
EX
GO
GS
LA
LB
LC
LO
LR
LS
RV
SF

7. Special Access Service (Cont'd)

7.7 Voice Grade Service (Cont'd)

7.7.6 Rates and Charges (Cont'd)

(C) Optional Features and Functions (Cont'd)

	Monthly Rate	
(8) Public Packet Switching Network (PPSN) Interface Arrangement[1] - Per arrangement	ICB	(C)

(1) As of October 6, 2004, PPSN Interface Arrangement service utilizing the X.25 protocol and the X.75 protocol is obsolete and limited to existing installations, at existing locations, for existing customers. (N) (N) (N)

(This page filed under Transmittal No. 72)

7. Special Access Service (Cont'd)

7.8 Program Audio Service

7.8.1 Basic Channel Description

A Program Audio channel is a channel with bandwidth measured in Hz for the transmission of a complex signal voltage. The actual bandwidth is a function of the channel interface selected by the customer. Only one-way transmission is provided. Program Audio channels are provided between customer designated premises or between a customer designated premises and a Telephone Company hub or hubs.

7.8.2 Technical Specifications Packages

		Package AP-			
Parameter	C*	1	2	3	4
Actual Measured Loss	X	X	X	X	X
Amplitude Tracking	X				
Crosstalk	X	X	X	X	X
Distortion Tracking	X				
Gain/Frequency Distortion	X	X	X	X	X
Group Delay	X				
Noise	X	X	X	X	X
Phase Tracking	X				
Short-Term Gain Stability	X				
Short-Term Loss	X				
Total Distortion	X	X	X	X	X

The technical specifications are delineated in Technical Reference TR-NPL-000337.

7.8.3 Channel Interfaces

The following channel interfaces (CIs) define the bandwidths that are available for a Program Audio channel:

* The desired parameters are selected by the customer from the list of available parameters.

(This page filed under Transmittal No. 1)

7. Special Access Service (Cont'd)

7.8 Program Audio Service (Cont'd)

7.8.3 Channel Interfaces (Cont'd)

CI	Bandwidth
PG-1	Nominal frequency from 50 to 15000 Hz
PG-3	Nominal frequency from 200 to 3500 Hz
PG-5	Nominal frequency from 100 to 5000 Hz
PG-8	Nominal frequency from 50 to 8000 Hz

Compatible channel interfaces are set forth in 15.3 following.

7.8.4 Optional Features and Functions

(A) Gain Conditioning

Control of 1004 Hz AML at initiation of service to 0dB ± 0.5 dB.

The following table shows the technical specifications packages with which the optional features and functions are available.

	Available with Technical Specifications Package AP-					
	C	1	2	3	4	
Gain Conditioning	X	X	X	X	X	(D)

7. Special Access Service (Cont'd)

7.8 Program Audio Service

7.8.5 Rates and Charges

	USOC	Monthly Rate	Daily* Rate	Nonrecurring Charge Monthly	Nonrecurring Charge Daily
(A) Channel Termination					
- Per Termination					
- 200 to 3500 Hz	T6ECS	$25.00(I)	$4.00(I)	$289.75	$289.75
- 100 to 5000 Hz	T6ECS	28.00(I)	4.00(I)	289.75	289.75
- 50 to 8000 Hz	T6ECS	30.00(I)	4.00(I)	289.75	289.75
- 50 to 15000 Hz	T6ECS	110.00(I)	12.00(I)	289.75	289.75

	USOC	Monthly Rate	Daily* Rate
(B) Channel Mileage			
(1) Channel Mileage Facility			
- Per Mile			
- 200 to 3500 Hz	1L5XX/CMF	$2.00(I)	$2.00(I)
- 100 to 5000 Hz	1L5XX/CMF	$2.00(I)	$2.00(I)
- 50 to 8000 Hz	1L5XX/CMF	$2.00(I)	$2.00(I)
- 50 to 15000 Hz	1L5XX/CMF	$3.00(I)	$2.00(I)
(2) Channel Mileage Termination			
- Per Termination			
- 200 to 3500 Hz	1L5XX/CMT	$15.50(I)	$2.00(I)
- 100 to 5000 Hz	1L5XX/CMT	$15.50	$2.00(I)
- 50 to 8000 Hz	1L5XX/CMT	$20.00(I)	$2.00(I)
- 50 to 15000 Hz	1L5XX/CMT	$32.00(I)	$3.35(I)

* Daily rates will be topped and maximum rates derived as set forth in 7.2.2.(B) preceding.

Rates contained in this transmittal are subject to subsequent adjustment, effective retrospectively, in the event the Commission or a court subsequently authorizes Nevada to correct its rates pursuant to pending motions, or petitions for reconsideration or waiver, or in the event of any other adjustment to an order of the Commission or a court.

(This page filed under Transmittal No. 103)

7. Special Access Service (Cont'd)

7.8 Program Audio Service

7.8.5 Rates and Charges (Cont'd)

(C) Optional Features and Functions

	USOC	Monthly Rate	Daily* Rate	Nonrecurring Charge Monthly	Nonrecurring Charge Daily
(1) Gain Conditioning	XGC	$2.00(I)	$2.00(I)	$73.25	$73.25

* Daily rates will be topped and maximum rates derived as set forth in 7.2.2.(B) preceding.

Rates contained in this transmittal are subject to subsequent adjustment, effective retrospectively, in the event the Commission or a court subsequently authorizes Nevada to correct its rates pursuant to pending motions, or petitions for reconsideration or waiver, or in the event of any other adjustment to an order of the Commission or a court.

(This page filed under Transmittal No. 103)

7. Special Access Service (Cont'd)

7.9 Video Service

7.9.1 Basic Channel Description

A Video channel is a channel with one-way transmission capability for a standard 525 line/60 field monochrome, or National Television Systems Committee color, video signal and one or two associated 5 or 15 kHz audio signal(s). The associated audio signal(s) may be either diplexed or provided as one or two separate channels. The provision and the bandwidth of the associated audio signal(s) is a function of the channel interface selected by the customer. Video channels are provided between customer designated premises or between a customer designated premises and a Telephone Company hub or hubs.

7.9.2 Technical Specifications Packages

	Package TV-		
Parameter	C*	1	2
Amplitude/Frequency Response Characteristics	X	X	X
Audio-To-Video Time Differential	X	X	X
Chrominance/Luminance Inequalities			
Gain	X	X	X
Delay	X	X	X
Chrominance/Luminance Intermodulation	X	X	X
Chrominance Nonlinear Gain Distortion	X	X	X
Chrominance Nonlinear Phase Distortion	X	X	X
Crosstalk	X	X	X
Differential Gain	X	X	X
Differential Phase	X	X	X
Dynamic Gain (picture and sync signal)	X	X	X
Field-Time Distortion	X	X	X
Gain/Difference Between Channels	X	X	
Phase Difference Between Channels	X	X	
Insertion Gain	X	X	X
Line-Time Distortion	X	X	X

* The desired parameters are selected by the customer from the list of available parameters.

(This page filed under Transmittal No. 1)

7. Special Access Service (Cont'd)

7.9 Video Service (Cont'd)

7.9.2 Technical Specifications Packages (Cont'd)

Parameter (Cont'd)	Package TV-C*	1	2
Luminance Non-Linear Distortion	X	X	X
Maximum Steady-State Test Levels	X	X	X
Short-Time Distortion	X	X	X
Total Harmonic Distortion and Noise	X	X	X
Transient Sync Signal Non-Linearity	X	X	X

The technical specifications are delineated in Technical Reference TR-NPL-000338.

* The desired parameters are selected by the customer from the list of available parameters.

(This page filed under Transmittal No. 1)

7. Special Access Service (Cont'd)

7.9 Video Service (Cont'd)

7.9.3 Channel Interfaces

The following channel interfaces (CIs) define the bandwidth and the provision of the audio signal(s) associated with a Video Channel:

CI	Audio Bandwidth	Provision
2TV6-1	15kHz	1 Channel, diplexed
2TV6-2	15kHz	2 Channels, diplexed
2TV7-1	15kHz	1 Channel, diplexed
2TV7-2	15kHz	2 Channels, diplexed
4TV6-5	5kHz	1 Channel, separate
4TV6-15	15kHz	1 Channel, separate
4TV7-5	5kHz	1 Channel, separate
4TV7-15	15kHz	1 Channel, separate
6TV6-5	5kHz	2 Channels, separate
6TV6-15	15kHz	2 Channels, separate
6TV7-5	5kHz	2 Channels, separate
6TV7-15	15kHz	2 Channels, separate

Compatible channel interfaces are set forth in 15.3 following.

ACCESS SERVICE

7. Special Access Service (Cont'd)

7.9 Video Service (Cont'd)

7.9.4 Rates and Charges

	USOC	Monthly Rate	Daily* Rate	Nonrecurring Charge Monthly	Nonrecurring Charge Daily
(A) Channel Termination					
- Per Termination					
- TV-1 or 2	TMEV1	$450.00(R)	$125.00(R)	$250.00(I)	$250.00(I)
- 4TV-5	TMEV4	$500.00(R)	$125.00(R)	$250.00(I)	$250.00(I)
- 6TV-5	TMEV6	$500.00(R)	$125.00(R)	$250.00(I)	$250.00(I)
- TV-15	TMEV5	$500.00(R)	$125.00(R)	$250.00(I)	$250.00(I)

(B) Channel Mileage	USOC	Monthly Rate	Daily Rate*
(1) Channel Mileage Facility			
- Per Mile			
- TV 1 or 2	1L5XX/CMF	$60.00(I)	$35.00(I)
- 4TV-5	1L5XX/CMF	$60.00(I)	$35.00(I)
- 6TV-5	1L5XX/CMF	$60.00(I)	$35.00(I)
- TV-15	1L5XX/CMF	$60.00(I)	$35.00(I)
(2) Channel Mileage Termination			
- Per Termination			
- TV-1 or 2	1L5XX/CMT	None	None
- 4TV-5	1L5XX/CMT	None	None
- 6TV-5	1L5XX/CMT	None	None
- TV-15	1L5XX/CMT	None	None

* Daily rates will be topped and maximum rates derived as set forth in 7.2.2.(B) preceding.

Rates contained in this transmittal are subject to subsequent adjustment, effective retrospectively, in the event the Commission or a court subsequently authorizes Nevada to correct its rates pursuant to pending motions, or petitions for reconsideration or waiver, or in the event of any other adjustment to an order of the Commission or a court.

(This page filed under Transmittal No. 103)

7. Special Access Service (Cont'd)

7.10 Digital Data Service

7.10.1 Basic Channel Description

A Digital Data channel is a channel for duplex four-wire transmission of synchronous serial data at the rate of 2.4, 4.8, 9.6, 56 or 64 kbps.* The actual bit rate is a function of the channel interface selected by the customer. The channel provides a synchronous service with timing provided by the Telephone Company through the Telephone Company's facilities to the customer in the received bit stream. Digital Data channels are only available via Telephone Company designated hubs and are provided between customer designated premises or between a customer designated premises and a Telephone Company hub or hubs. Digital Data service may also be ordered in conjunction with High Capacity (DS-1) to Analog/Digital (DS-O) multiplexing as set forth in 7.11.4 (5) following, and not be required to route through a Digital Data Service Hub as set forth in Technical Reference Pub L-780077-PB/NB.

The customer will provide the Channel Service Unit-type equipment or other Network Channel Terminating Equipment associated with the Digital Data channel at the customer premises. The interim program for interconnection of such equipment is set forth in Technical Reference PUB AS No. 1.

* 64kbps Service is only available with High Capacity Multiplexing DS1 to Voice/Digital as set forth in 7.11.4 (B)(5) following. 64kpbs service is only available where technically feasible.

7. Special Access Service (Cont'd)

7.10 Digital Data Service (Cont'd)

7.10.2 Technical Specifications Packages

	Package D-			
Parameter	1	2	3	4
Error-Free Seconds	X	X	X	X

The Telephone Company will provide a channel capable of meeting a monthly average performance equal to or greater than 99.875% error-free seconds (if provided through a Digital Data hub) while the channel is in service, if it is measured through a CSU equivalent which is designed, manufactured, and maintained to conform with the specifications contained in Technical Reference PUB 62310.

Voltages which are compatible with Digital Data Service are delineated in Technical Reference TR-NPL-000341.

7. Special Access Service (Cont'd)

7.10 Digital Data Service (Cont'd)

7.10.3 Channel Interfaces

The following channel interfaces (CIs) define the bit rates that are available for a Digital Data channel:

CI	Bit Rate
DU-24	2.4 kbps
DU-48	4.8 kbps
DU-96	9.6 kbps
DU-56	56.0 kbps
DU-56A	64.0 kbps

Compatible channel interfaces are set forth in 15.3 following.

7.10.4 Optional Features and Functions

(A) Central Office Bridging Capability

The following table shows the technical specifications packages with which the optional features and functions are available.

	Available with Technical Specifications Package D-			
	1	2	3	4
Central Office Bridging Capability	X	X	X	X

ACCESS SERVICE

7. Special Access Service (Cont'd)

7.10 Digital Data Service (Cont'd)

7.10.5 Rates and Charges

	USOC	Monthly Rate	Nonrecurring Rates
- Per termination			
- 2.4 kbps	T6ECS	$ 71.00	$250.00
- 4.8 kbps	T6ECS	71.00	250.00
- 9.6 kbps	T6ECS	71.00	250.00
-56.0 kbps	T6ECS	71.00	250.00
-64.0 kbps	T6ECS	71.00	250.00

(B) Channel Mileage

	USOC	Monthly Rates
(1) Channel Mileage Facility		
- Per Mile		
- 2.4 kbps	1L5XX/CMF	$0.72(I)
- 4.8 kbps	1L5XX/CMF	0.72(I)
- 9.6 kbps	1L5XX/CMF	0.72(I)
- 56 kbps	1L5XX/CMF	0.72(I)
- 64 kbps	1L5XX/CMF	0.72(I)
(2) Channel Mileage Termination		
- Per Termination		
- 2.4 kbps	1L5XX/CMT	$13.00
- 4.8 kbps	1L5XX/CMT	13.00
- 9.6 kbps	1L5XX/CMT	13.00
- 56 kbps	1L5XX/CMT	13.00
- 64 kbps	1L5XX/CMT	13.00

Rates contained in this transmittal are subject to subsequent adjustment, effective retrospectively, in the event the Commission or a court subsequently authorizes Nevada to correct its rates pursuant to pending motions, or petitions for reconsideration or waiver, or in the event of any other adjustment to an order of the Commission or a court.

(This page filed under Transmittal No. 103)

7. Special Access Service (Cont'd)

7.10 Digital Data Service (Cont'd)

7.10.5 Rates and Charges (Cont'd)

	USOC	Monthly Rate
(C) Optional Features and Functions		
(1) Bridging		
- Per port	BCNDA	$16.51

(This page filed under Transmittal No. 1)

7. Special Access Service (Cont'd)

7.11 High Capacity Service

7.11.1 Basic Channel Description

A High Capacity channel is a channel for the transmission of nominal 1.544, 3.152, 6.312, 44.736 (DS3), or 274.176 Mbps isochronous serial data. The actual bit rate and framing format is a function of the channel interface selected by the customer. DS3 will be provided with an electrical handoff at the customer premise at the request of the customer. High Capacity channels are provided between customer designated premises or between a customer designated premises and a Telephone Company hub or hubs. (T)

The customer will provide the Network Channel Terminating Equipment associated with the High Capacity channel at the customer's premises. The interim program for interconnection of such equipment is set forth in Technical Reference PUB AS No. 1.

DS3 High Capacity service offerings are only available where facilities and operating conditions permit. Where facilities and/or operating conditions do not permit, Special Construction as set forth in Pacific Bell Telephone Company's FCC No. 2 shall apply. (T)

7.11.2 Technical Specifications Packages

	Package HC-					
Parameters	0	1	1C	2	3	4
Error-Free Seconds		X				

A channel with technical specifications package HC1 will be capable of an error-free second performance of 98.75% over a continuous 24 hour period as measured at the 1.544 Mbps rate through a CSU equivalent which is designed, manufactured, and maintained to conform with the specifications contained in Technical Reference PUB 62411 and Technical Advisory TA-TSY-000342.

(This page filed under Transmittal No. 4)

7. Special Access Service (Cont'd)

7.11 High Capacity Service (Cont'd)

7.11.3 Channel Interfaces

The following channel interfaces (CIs) define the bit rates that are available for a High Capacity channel:

CI	Bit Rate
DS-15	1.544 Mbps (DS1)
DS-27	274.176 Mbps (DS4)
DS-31	3.152 Mbps (DS1C)
DS-44	44.736 Mbps (DS3)
DS-63	6.312 Mbps (DS2)

Compatible channel interfaces are set forth in 15.3 following.

7.11.4 Optional Features and Functions

(A) Transfer Arrangement

An arrangement that affords the customer an additional measure of flexibility in the use of their access channel(s). The arrangement can be utilized to transfer a leg of a Special Access Service to either a spare or working channel that terminates in either the same or a different customer designated premises. A dial-up control service is required to operate the transfer arrangement. A spare channel, if required, is not included as part of the option.

7. Special Access Service (Cont'd)

7.11 High Capacity Service (Cont'd)

7.11.4 Optional Features and Functions

(B) Central Office Multiplexing

(1) DS4 to DS1

An arrangement that converts a 274.176 Mbps channel to 168 DS1 channels using digital time division multiplexing.

(2) DS3 to DS1

An arrangement that converts a 44.736 Mbps channel to 28 DS1 channels using digital time division multiplexing.

(3) DS2 to DS1

An arrangement that converts a 6.312 Mbps channel to four DS1 channels using digital time division multiplexing.

(4) DS1C to DS1

An arrangement that converts a 3.152 Mbps channel to two DS1 channels using digital time division multiplexing.

(5) DS1 to Voice/Digital

An arrangement that converts a 1.544 Mbps channel to 24 channels for use with Voice Grade, Digital Data Over Voice or Digital Data Services.

7. Special Access Service (Cont'd)

7.11 High Capacity Service (Cont'd)

7.11.4 Optional Features and Functions (Cont'd)

(B) Central Office Multiplexing (Cont'd)

(6) DS1 to DS0

An arrangement that converts a 1.544 Mbps channel to 23 64.0 Kbps channels utilizing digital time division multiplexing.

(7) DSO to Subrate

An arrangement that converts a 64.0 Kbps channel to subspeeds of up to twenty 2.4 Kbps, ten 4.8 Kbps, or five 9.6 Kbps channels using digital time division multiplexing.

The following table shows the technical specifications packages with which the optional features and functions are available.

	Available with Technical Specifications Package HC-					
	0	1	1C	2	3	4
Central Office Multiplexing:						
DS4 to DS1						X
DS3 to DS1					X	
DS2 to DS1				X		
DS1C to DS1			X			
DS1 to Voice/Digital		X				
DS1 to DS0		X				
DS0 to Subrate*	X					
Cross-Connect		X				
Transfer Arrangement		X				

(N)

(8) Multiplexer Cross-Connect (MCC) (N)

An arrangement which provides the cross-connect of one channel of a Special Access High Capacity DS3 multiplexer to a channel of another Special Access High Capacity DS3 Multiplexer.

Multiplexer Cross-Connection (MCC) will be charged per cross-connect per central office, where the cross-connection is performed. If MCC is provided between two Telephone Company (N)

* Available only on a channel of 1.544 Mbps facility to a Telephone Company DDS hub.

(This page filed under Transmittal No. 17)

ACCESS SERVICE

7. Special Access Service (Cont'd) (N)

7.11 High Capacity Service (Cont'd)

7.11.4 Optional Features and Functions (Cont'd)

(B) Central Office Multiplexing (Cont'd)

(8) Multiplexer Cross-Connect (MCC) (Cont'd)

offices where DS3 multiplexing is performed, appropriate Channel Mileage and Channel Mileage Termination Charges for the lower speed DS1 service will apply between the two central offices along with one MCC charge per cross-connect per central office.

When one service is cross-connected to another service, the two cross-connected services are treated separately for service performance measurement and service interruption credit purposes.

If two customers are involved, one customer will be responsible for the entire billing of MCC. (N)

(This page filed under Transmittal No. 17)

7. Special Access Service (Cont'd)

7.11 High Capacity Service (Cont'd)

7.11.5 Rates and Charges General Description

This section contains the specific regulations governing the rates and charges which apply to High Capacity Services.

DS3 High Capacity Service is available under a month-to-month, one, three or five year billing period as described in 7.11.5.1 (A) following. If the Utility initiates rate changes resulting in a decrease of rates for an existing DS3 service with a 1, 3 or 5 year billing period, those rate changes will be passed along to the customer. Rate changes resulting in an increase of rates for an existing DS3 service with a 1, 3 or 5 year billing period will not exceed the original rate for that selected billing period. (x)

7.11.5.1 DS3 High Capacity Service Rate Description (x)

(A) DS3 High Capacity Service Billing Period

The billing period establishes the amount of time that rates for a service are stabilized by the Utility.

The following billing periods are available for DS3 High Capacity Services and associated optional features and functions:

- Month-to Month (x)
- 1 Year (Channel Termination Only)
- 3 Year (Channel Termination Only)
- 5 Year (Channel Termination Only)

One month prior to the expiration of the billing period, the customer must select one of the following options:

(1) Renew the service for a specified period of time as provided in this tariff under the regulations.

(2) Extend the service for an additional 12 month period at the current rates for the existing 1, 3 or 5 year billing period. (x)

(3) Elect to disconnect the service upon expiration of the billing period. (x)

If a customer selects neither (1), (2) nor (3) above, the current regulations for the Month-to-Month rate option will be applied to the Channel Termination upon expiration of the billing period. (x) (x)

(x)
(x)

x Issued under authority of Special Permission No. 02-051 of the F.C.C. in order to restore currently effective provisions and to withdraw material filed under Transmittal No. 12 without becoming effective.

(This page filed under Transmittal No. 13)

7. Special Access Service (Cont'd)

7.11 High Capacity Service (Cont'd)

7.11.5 Rates and Charges General Description (Cont'd)

7.11.5.1 DS3 High Capacity Service Rate Description (Cont'd)

(A) DS3 High Capacity Service Billing Period (Cont'd)

No nonrecurring charges will apply as long as the same number of DS3s are renewed. Any change in the number of DS3s will incur appropriate nonrecurring charges.

The customer may elect to extend an existing DS3 under a 1, 3 or 5 year billing period for a single, additional 12 month period at the current rates for the existing billing period provided the same number of DS3 circuits are being extended.* (C)

If the current DS3 rates are lower than the original DS3 rates, the lower rate will be charged. (D) (D) (D)

The customer must provide the Utility with a written notice of intent to extend the DS3 billing period no later than one month prior to the expiration of the service period.

An existing DS3 under a 1 or 3 year billing period may be converted to a DS3 under a longer term 3 or 5 year billing period without termination liabilities, provided that:

(1) the expiration date for the new term agreement is beyond the end of the original term agreements, (C) (C) (C)

(2) the converted DS3 must be based upon the rates that are currently in effect and otherwise available to all customers, (T)

(3) the customer maintains the same or greater number of DS3 circuits under the new billing period, and (T)

(4) No lapse in service occurs. (N)

*This option will no longer be available for new circuits provisioned on or after, November 21, 2003. There will be no change to existing circuits. (N) (N)

(This page filed under Transmittal No. 55)

7. Special Access Service (Cont'd)

7.11 High Capacity Service (Cont'd)

7.11.5 Rates and Charges General Description (Cont'd)

7.11.5.1 DS3 High Capacity Service Rate Description (Cont'd)

(B) DS3 High Capacity Service Termination Charges

In the event service is terminated prior to the expiration of the billing period, termination charges will apply. Termination charges do not apply to Month-to-Month service. In the event service is terminated prior to the end of the billing period, a termination charge utilizing the following termination percentage will apply:

Billing Period	Termination Percentage
1, 3 or 5 year	45%

The termination charge is calculated as follows:

Monthly Rate x Months Remaining in Billing Period x Termination Percentage

Example: A customer with a $5,000 monthly rate terminates service with 10 months remaining in a 3 year billing period. The termination charge would be calculated as follows:

$5,000 x 10 x .45 = $22,500

The termination charge would be: $22,500

(2) Customers requesting the termination of a DS3 under a 1, 3 or 5 year billing period prior to the expiration date of an extension of service will be charged a termination charge calculated as follows:

Number of Months Utilized of the Extension of Service X (Current Month To Month Rate - Billing Period Monthly Rate)

(3) When a DS3 High Capacity Service, which is billed under the Shared Use provision is terminated, the termination liability will be based on the full charges as listed in 7.11.5.2 following.

(4) A termination charge will not apply if the customer modifies service as set forth in 7.2.3 (Moves), preceding, as long as the customer maintains the same or greater number of DS3 circuits.

(This page filed under Transmittal No. 1)

7. Special Access Service (Cont'd) (N)

7.11 High Capacity Service (Cont'd)

7.11.5.2 DS1 Term Payment Plan (DS1 TPP)

(A) General Description

The DS1 Term Payment Plan (DS1 TPP) is a term plan that allows a customer to purchase DS1 High Capacity Service over a 1, 2, 3, 5, or 7 year period. During the term of the selected DS1 TPP, Telephone Company initiated recurring rate changes (increases or decreases) will automatically be applied to the monthly payments for the remaining months of the current DS1 TPP term. The monthly recurring rate during the DS1 TPP term will never exceed the initial DS1 TPP rate. The DS1 TPP rates can be found in Section 7.11.5.3 following.

The DS1 TPP cannot be combined with other tariffed services, discounts, or pricing flexibility contracts, unless explicitly stated in the respective tariff terms and conditions.

The following recurring rate elements are included in the DS1 TPP as described in 7.2 (Rate Regulations):

- DS1 High Capacity Service Channel Termination;
- DS1 High Capacity Service Channel Mileage – Channel Mileage Facility (per mile) and Channel Mileage Termination (per termination);
- DS1 High Capacity Service Central Office Multiplexing;
- DS1 High Capacity Service Collocation Transport (Fixed and Per Mile).

(N)

7. Special Access Service (Cont'd)

(N)

7.11 High Capacity Service (Cont'd)

7.11.5.2 DS1 Term Payment Plan (DS1 TPP) (Cont'd)

(B) Conversion of service to a new DS1 TPP or Higher Speed Service

During a customer's DS1 TPP term, conversion may be made to a new DS1 TPP term of the same or different length or an upgrade may be made to a higher speed service, if the expiration date for the new DS1 TPP term or for the new higher service is beyond the expiration of the original DS1 TPP term. The new DS1 TPP term or higher speed service must occur between the same two termination points as the original DS1 service being converted. The new DS1 TPP term or the higher speed service term becomes effective upon completion of the conversion activity. The rates, terms, and conditions applicable for the new DS1 TPP term or higher speed service will be those in effect at the time the conversion is requested. Credit for months under the previous DS1 TPP may not be transferred to the new DS1 TPP or to the higher speed service term. When all conditions described above are met, termination liability for the remaining months on the original DS1 TPP will not apply.

(C) Moves

During a DS1 TPP term a customer may move one end of a DS1 High Capacity Service to another location in the same LATA and keep the DS1 TPP in force provided the following requirements are met:

(1) the customer must have met the minimum in-service period at the previous location and will be subject to a new minimum in-service period at the new location; and

(2) the Move is accommodated on a single customer order with the stipulation that the BAN (Billing Account Number), the NC (Network Channel Code), ACTL (Access Customer Terminal Location) and the ECCKT (Circuit Id) are provided and are the same as for the existing circuit being moved. (N)

(This page filed under Transmittal No. 41)

7. Special Access Service (Cont'd) (N)

7.11 High Capacity Service (Cont'd)

7.11.5.2 DS1 Term Payment Plan (DS1 TPP) (Cont'd)

(C) Moves (Cont'd)

Moves to a different wire center may result in a change in the application of the rate elements associated with the service and therefore could result in a change in the monthly recurring charges.

EXAMPLE #1: One end of a DS1 is changed from Location A to Location B within the same LATA. The new Channel Mileage associated with the one-ended Move increased by 2 miles. Therefore, the resulting Channel Mileage calculation increases the monthly recurring charge accordingly.

EXAMPLE #2: One end of a DS1 is changed from Location C to Location D within the same LATA. The new Channel Mileage associated with the one-ended Move decreased by 5 miles. Therefore, the resulting Channel Mileage calculation decreases the monthly recurring charge accordingly.

If no lapse in service occurs and if the requirements in (1) and (2) as stated previously are met, termination liability will not apply. Nonrecurring Channel Termination Charges or Nonrecurring Collocation Transport Charges for the physical move will apply.

(D) Expiration of DS1 TPP Term options

DS1 TPP is not available for renewal. At the expiration of the DS1 TPP term, the customer may select a new DS1 TPP term at the prevailing DS1 TPP rates. If a customer does not wish to purchase a new DS1 TPP at the expiration of the term, the customer's service will automatically convert to the current month-to-month rates. (N)

7. Special Access Service (Cont'd)

7.11 High Capacity Service (Cont'd)

7.11.5.2 DS1 Term Payment Plan (DS1 TPP) (Cont'd)

(E) DS1 High Capacity Service Portability Commitment

DS1 High Capacity Service Portability Commitment provides a customer the ability to establish a regional volume commitment in the form of DS1 Channel Terminations and receive a waiver on DS1 TPP Termination Liability, as described in 7.11.5.2(G), during the life of the Portability Commitment. The Portability Commitment will consist of a Commitment Level (CL), as described below, and will last 3-years. The Portability Commitment cannot be renewed.

Customers may purchase DS1 service under DS1 TPP terms of 2, 3, 5, or 7 years and have the associated Channel Terminations count towards the CL.

Following are the terms and conditions associated with the Portability Commitment:

(1) Customer commits to a 3-Year Commitment Level (CL) that is reviewed on a monthly basis. The initial monthly CL is calculated by Telephone Company and is the total of all DS1 Channel Terminations in-service for the month previous to the month in which the Portability Commitment form is signed. The initial monthly CL will consist of all Channel Terminations including those on Month-to-Month terms and other term pricing plans. The effective date of the Portability Commitment will be the first day of the month immediately following the month in which the Portability Commitment is signed; and

(2) Customer must have a minimum of 40 Channel Terminations in-service each month and at least 80% of the CL under a 2, 3, 5,or 7 year DS1 TPP each month; and (x)

(x)

(x)

(x) Issued under authority of Special Permission No. 05-007 of the F.C.C. in order to restore currently effective material and to withdraw material filed under Transmittal 92 without becoming effective.

(This page filed under Transmittal No. 95)

7. Special Access Service (Cont'd)

7.11 High Capacity Service (Cont'd)

7.11.5.2 DS1 Term Payment Plan (DS1 TPP) (Cont'd)

(E) DS1 High Capacity Service Portability Commitment (Cont'd)

(3) Each month, the total number of 2, 3, 5, and 7 year DS1 TPP Channel Terminations for the previous month will be calculated and measured against the corresponding monthly CL; (x)

(a) If the total number of Channel Terminations, as calculated above, is 80% - 124% of the CL, no other charges will apply for the previous month.

(b) If the total number of Channel Terminations, as calculated above, is less than 80% of the CL, charges will be assessed as follows:

(i) Customer will be billed the difference between 80% of the CL and the actual number of in-service Channel Terminations. EXAMPLE #1:Customer A has a CL = 1,000 Channel Terminations for the month of June. Customer A must have at least 800 DS1 Channel Terminations in-service to meet the 80% target. In July, the monthly review calculated 795 DS1 Channel Terminations in-service for the month of June. The difference between 80% of the CL (800) and the actual in-service total (795) is 5 Channel Terminations. Therefore, the customer will be billed an amount equal to 5 Channel Terminations multiplied by the current Nonrecurring Channel Termination rate. For subsequent months, Customer A will continue to be billed an amount equal to the difference between 80% of the CL and the actual in-service number of Channel Terminations that are below 80% of the CL (multiplied) by the current nonrecurring Channel Termination rate, until 80% of the CL is met.

(c) If the total number of in-service Channel Terminations, as calculated above, is more than 124% of the CL, the customer will be billed an adjustment factor equal to the Nonrecurring Channel Termination charge multiplied by the difference between the actual number of Channel Terminations in-service and 124% of the CL. (x)

x) Issued under authority of Special Permission No. 05-007 of the F.C.C. in order to restore currently effective material and to withdraw material filed under Transmittal 92 without becoming effective.

(This page filed under Transmittal No. 95)

7. Special Access Service (Cont'd) (N)

7.11 High Capacity Service (Cont'd)

7.11.5.2 DS1 Term Payment Plan (DS1 TPP) (Cont'd)

(E) DS1 High Capacity Service Portability Commitment (Cont'd)

(3) (Cont'd)

(ii) EXAMPLE #2: Customer B has a CL of 500 Channel Terminations. In month 5 of the commitment, Customer B has 650 Channel Terminations in-service. Customer B has exceeded the CL by more than the 124% threshold (620). Customer B will be charged an adjustment factor equal to 30 Channel Terminations (650-620)(multiplied) by the current Nonrecurring Channel Termination rate. For subsequent months, Customer B will continue to be charged the Nonrecurring Channel Termination rate multiplied by the difference between the actual number of Channel Terminations in-service and 124% of the CL until Customer B no longer exceeds the CL by the 124% threshold.

(d) Customers may increase the Commitment Level (CL) at any time by providing written notification to Telephone Company. Credits for previously charged adjustments billed for exceeding the CL will not be provided when a customer increases the CL.

(e) If the customer elects to terminate the DS1 High Capacity Service Portability Commitment or elects to decrease the CL prior to the 3-Year commitment, Termination Liabilities will apply. Termination Liability is calculated as the decreased number of Channel Terminations (multiplied) by the prevailing Month-to-Month recurring rate (multiplied) by the number of months remaining in the term of the Portability Commitment.

(i) EXAMPLE #3: Customer C has a CL equal to 1,000 Channel Terminations. In month 10 of the 36-month Portability Commitment, Customer C elects to decrease the CL by 50 Channel Terminations. The Termination Liability associated with the decrease is equal to:

(50 Channel Terminations) X (26 months remaining) X (prevailing Month-to-Month Rate)

(N)

7. Special Access Service (Cont'd) (N)

7.11 High Capacity Service (Cont'd)

7.11.5.2 DS1 Term Payment Plan (DS1 TPP) (Cont'd)

(E) DS1 High Capacity Service Portability Commitment (Cont'd)

(3) (Cont'd)

(ii) EXAMPLE #4: Customer D has a CL equal to 500 Channel Terminations. In month 20 of the 36-month Portability Commitment, Customer D elects to terminate the entire Portability Commitment. The Termination Liability associated with the termination of the entire commitment is equal to:

(500 Channel Terminations) X (16 months remaining) X (prevailing Month-to-Month Rate)

(F) Applicable One-Time Charges

(1) DS1 Term Payment Plan Non-Recurring Charges

Non-recurring channel termination charge will apply per channel termination on new installations of DS1 High Capacity Service on 1 year DS1 TPP term, and on all physical moves of DS1 High Capacity Services. Non-recurring channel termination charges will be waived on new installations with 2, 3, 5, and 7 year DS1 TPP terms. The Nonrecurring Channel Termination Charge will also apply, applicable as stated in 7.11.5.2(E) previously, for customers who have a DS1 High Capacity Service Portability Commitment. (N)

7. Special Access Service (Cont'd) (N)

7.11 High Capacity Service (Cont'd)

7.11.5.2 DS1 Term Payment Plan (DS1 TPP) (Cont'd)

(G) Termination Liability

Termination liability charges will apply in the following cases:

(1) In the event service is terminated prior to the expiration of the minimum service period, charges, as specified in Section 5.2.5 (Minimum Period), will apply in addition to the termination liability charges identified in 7.11.5.2(G)(2) following.

(2) In the event service is terminated prior to the end of the DS1 TPP term, a termination charge utilizing the following termination percentage will apply:

Termination Billing Period Percentage: 40%

The termination charge is calculated as follows:

(Monthly Recurring Rate) X (Months remaining in DS1 TPP term) X (Termination Billing Period Percentage)

Example: A customer with a $500 monthly rate terminates service with 10 months remaining in a 3 year DS1 TPP term. The termination liability charge would be calculated as follows:

($500) X (10) X (.40) = $2000 (N)

7. Special Access Service (Cont'd)

7.11 High Capacity Service (Cont'd)

7.11.5 Rates and Charges General Description (Cont'd)

7.11.5.3 Rates and Charges[1]

	USOC	Monthly Rate	Nonrecurring Charges
(A) Channel Termination (Per Point of Termination)			
- 1.544 Mbps	TMECS	$124.55(I)	$412.50
- 3.152 Mbps	TWT++	ICB	ICB
- 6.312 Mbps	TWT++	ICB	ICB
-44.736 Mbps(Month-to-Month*)	Z3MAC/TMECS	$2,125.00	$1,500.00
-44.736 Mbps(Monthly Extension)	Z3MAC/TMECS	$2,125.00	$1,500.00
-44.736 Mbps(1 Year Plan)	Z3MAC/Z31A+	$1,450.00	$1,000.00
-44.736 Mbps(3 Year Plan)	Z3MAC/Z33A+	$900.00	$0.00
-44.736 Mbps(5 Year Plan)	Z3MAC/Z35A+	$800.00	$0.00
-274.176 Mbps	TWT++	ICB	ICB

	USOC	Monthly Rate
(B) Channel Mileage[2]		
(1) Channel Mileage Facility (Per Mile)		
- 1.544 Mbps	IL5XX/CMF	$9.00
- 3.152 Mbps	CMF	ICB
- 6.312 Mbps	CMF	ICB
-44.736 Mbps(Month-to-Month*)	IL5XX/CMF	$39.00
-44.736 Mbps(Monthly Extension)	IL5XX/CMF	$39.00
-44.736 Mbps(1 Year Plan)	IL5XX/CMF	$38.00
-44.736 Mbps(3 Year Plan)	IL5XX/CMF	$36.50
-44.736 Mbps(5 Year Plan)	IL5XX/CMF	$34.00(R)
-274.176 Mbps	CMF	ICB
(2) Channel Mileage Termination (Per Termination)		
- 1.544 Mbps	IL5XX/CMT	$52.50(I)
- 3.152 Mbps	CMT	ICB
- 6.312 Mbps	CMT	ICB
-44.736 Mbps(Month-to-Month*)	IL5XX/CMT	$347.50
-44.736 Mbps(Monthly Extension)	IL5XX/CMT	$347.50
-44.736 Mbps(1 Year Plan)	IL5XX/CMT	$342.50
-44.736 Mbps(3 Year Plan)	IL5XX/CMT	$337.50
-44.736 Mbps(5 Year Plan)	IL5XX/CMT	$332.50
-274.176 Mbps	CMT	ICB

Note 1: ICB rates and charges are filed in 7.12 following.
Note 2: When the customer orders High Capacity Service as described in 7.11 and 7.11.5.2, preceding, the Channel Mileage Facility must be ordered in conjunction with an associated Channel Termination as described in 7.2.1(A), preceding.

*This option will no longer be available for new circuits provisioned on or after, November 21, 2003. There will be no change to existing circuits.

Rates contained in this transmittal are subject to subsequent adjustment, effective retrospectively, in the event the Commission or a court subsequently authorizes Nevada to correct its rates pursuant to pending motions, or petitions for reconsideration or waiver, or in the event of any other adjustment to an order of the Commission or a court.

(This page filed under Transmittal No. 103)

ACCESS SERVICE

7. Special Access Service (Cont'd)

7.11 High Capacity Service

7.11.5 Rates and Charges General Description (Cont'd)

7.11.5.3 Rates and Charges (Cont'd)

	USOC	Monthly Rate
(C) Optional Features and Functions		
(1) Multiplexing, per arrangement		
DS4 to DS1	MXA++	ICB
DS3 to DS1[1]		
Month-to-Month*	MQ3	$425.00
Monthly Extension	MQ3	$425.00
1 Year	MQ3	$420.00
3 Year	MQ3	$410.00
5 Year	MQ3	$400.00
DS2 to DS1	MXD++	ICB
DS1C to DS1	MXH++	ICB
DS1 to Voice/Digital*	MQ1/MQ1++	$170.00
DS1 to DS0	QMU/QMUA1/QMU++**	$170.00
DS0 to Subrates		
-Up to 20 2.4 kbps services	QSU24	$175.00
-Up to 10 4.8 kbps services	QSU48	$175.84
-Up to 5 9.6 kbps services	QSU96	$125.00(I)

* A channel of this DS1 to a multiplexing Hub can be used for Digital Data Service or Digital Data Over Voice.
** QMU and QMUA1 are used in CABS. QMU++ is used in CRIS billing system.
ICB rates and charges are filed in 7.12 following.
[1] This option will no longer be available for new circuits provisioned on or after, November 21, 2003. There will be no change to existing circuits.

Rates contained in this transmittal are subject to subsequent adjustment, effective retrospectively, in the event the Commission or a court subsequently authorizes Nevada to correct its rates pursuant to pending motions, or petitions for reconsideration or waiver, or in the event of any other adjustment to an order of the Commission or a court.

(This page filed under Transmittal No. 103)

7. Special Access Service (Cont'd)

7.11 High Capacity Service

7.11.5 Rates and Charges General Description (Cont'd)

7.11.5.3 Rates and Charges (Cont'd)

	USOC	Monthly Rate	Nonrecurring Rate
(C) Optional Features and Functions (Cont'd)			
(2) Multiplexer Cross-Connect - per cross-connect, per central office	1L5TC	$10.00	$80.00
(3) Transfer Arrangement (dial-up*) - per four port arrangement including control channel termination**	USV	ICB	

(D) DS1/DS3 Rollover

	USOC	Nonrecurring Charge
-per DS1 Channel Termination	NRBR1/NRBRH/SVR***	$300.00
-per DS3 Channel Termination	NRBR3/SVR	825.00

(E) Collocation Transport

	USOC	Monthly Rate Fixed	Monthly Rate Per Mile	Nonrecurring Charges 1st Ckt.	Nonrecurring Charges Addl Ckt.
1.544 Mbps	(1H48S)	$52.50(I)	$9.00	$300.00	$300.00

44.736 Mbps	USOC (1H48S)	Monthly Rate Fixed	Monthly Rate Per Mile	Nonrecurring Charges 1st Ckt.	Nonrecurring Charges Addl Ckt.
Month-to-Month[1]		$347.35	$39.00	$1,500.00	$1,500.00
Monthly Extension		$347.35	$39.00		
1 Year Plan		$342.50	$38.00	$1,000.00	$1,000.00
3 Year Plan		$337.50	$36.50	$0.00	$0.00
5 Year Plan		$332.50	$34.00(R)	$0.00	$0.00

* The Dial-Up option requires the customer to purchase the Controller Arrangement from 13.3.7 following.

* An additional Channel Termination charge will apply whenever a spare channel is configured as a leg to the customer premises. Additional channel mileage charges will also apply when the transfer arrangement is not located in the customer premises serving wire center

*** NRBR1 and NRBRH are used in CABS. SVR is used in CRIS billing system.

[1] This option will no longer be available for new circuits provisioned on or after, November 21, 2003. There will be no change to existing circuits.

Rates contained in this transmittal are subject to subsequent adjustment, effective retrospectively, in the event the Commission or a court subsequently authorizes Nevada to correct its rates pursuant to pending motions, or petitions for reconsideration or waiver, or in the event of any other adjustment to an order of the Commission or a court.

(This page filed under Transmittal No. 103)

ACCESS SERVICE

7. Special Access Service (Cont'd)

7.11 High Capacity Service

7.11.5 Rates and Charges General Description (Cont'd)

7.11.5.3 Rates and Charges (Cont'd)

(F) DS1 Term Payment Plan

(1) Channel Termination
- Per Point of Termination

USOC	1 Year	2 Year	3 Year	5 Year	7 Year
TMECS	$122.50	$120.00	$115.00	$ 105.00	$100.00

(2) Channel Mileage
- Channel Mileage Termination (per termination)

USOC	1 Year	2 Year	3 Year	5 Year	7 Year
1L5XX	$ 51.00(I)	$ 45.00	$ 40.00	$ 35.00	$ 32.50

- Channel Mileage Facility (per mile)

USOC	1 Year	2 Year	3 Year	5 Year	7 Year
1L5XX	$ 9.00	$ 9.00	$ 8.75	$ 8.50	$ 8.25

(3) Central Office Multiplexing DS1 to DS0 voice/digital
-Per arrangement

USOC	1 Year	2 Year	3 Year	5 Year	7 Year
MQ1, MQ1++, QMU, QMUA1, QMU++	$180.00(I)	$170.00	$170.00	$ 160.00	$150.00

(4) Collocation Transport
-Channel Mileage
- Fixed

USOC	1 Year	2 Year	3 Year	5 Year	7 Year
1H48S	$ 51.00(I)	$ 45.00	$ 40.00	$ 35.00	$ 32.50

– Per Mile

USOC	1 Year	2 Year	3 Year	5 Year	7 Year
1H48S	$ 9.25(I)	$ 9.00	$ 8.75	$ 8.50	$ 8.25

(5) Nonrecurring Charges-One Time Charges
- Per point of channel termination

USOC	DESCRIPTION	RATE
TMECS	Channel Termination Nonrecurring Charge	$ 900.00
1H48S	Collocation Transport Nonrecurring Charge	

NOTE: Channel Termination Nonrecurring Charges and Collocation Transport Nonrecurring Charges are waived on new installations of DS1 High Capacity Service with a 2, 3, 5, or 7 year DS1 TPP.

Rates contained in this transmittal are subject to subsequent adjustment, effective retrospectively, in the event the Commission or a court subsequently authorizes Nevada to correct its rates pursuant to pending motions, or petitions for reconsideration or waiver, or in the event of any other adjustment to an order of the Commission or a court.

(This page filed under Transmittal No. 103)

7. Special Access Service (Cont'd)

(M)

(M)

7.12 Fractional DS1 Service (N)

(A) Basic Channel Description

A Fractional DS1 channel provides for the digital transmission of nominal 128, 256, 384, 512, 768 kbps, serial data. The actual bit rate is a function of the channel interface selected by the customer. Fractional DS1 channels are provided for two-point service between customer designated premises or between a customer designated premises and a Telephone Company Digital Hub. Rates for Fractional DS1 Service can be found in Section 7.12.1.

When a single Fractional DS1 channel is ordered to be terminated at a customer's designated POP, which requires a minimum digital interface level at 1.544 Mbps, the Telephone Company will provide the required interface where facilities are available.

Fractional DS1 service is offered only where equipment and facilities are available. Fractional DS1 service is provisioned from specific wire centers which are listed in the National Exchange Carrier Association, Inc. Tariff FCC No. 4. Availability is not restricted to customers serviced by the wire centers listed in FCC No. 4, but the service must be routed through the designated offices in FCC No. 4. Mileage, as defined in 7.2.5 (Mileage Measurement) will apply.

It is the customer's responsibility to arrange for the Channel Service Unit-type equipment or other Network Channel Terminating Equipment associated with the Fractional DS1 channel at the customer premises.

Rates and charges for Fractional DS1 Service can be found in Section 7.12.1 following.

Certain material previously appearing on this page now appears on Original 7-94.

(N)

7. Special Access Service (Cont'd) (N)

7.12 Fractional DS1 Service (Cont'd)

(B) Technical Specifications Packages

Technical Specifications Package HC1 will apply for all speeds of Fractional DS1 Service.

A Fractional DS1 channel with Technical Specifications Package HC1 will be capable of an error-free second performance of 98.75% over a continuous 24 hour period as measured at the 1.544 Mbps rate through a Channel Service Unit equivalent which is designed, manufactured, and maintained to conform with the specifications contained in the Technical Reference for High Capacity Service.

(C) Channel Interfaces (CI)

The following channel interfaces define the bit rates that are available for a Fractional DS1 channel:

CI	Bit Rate
DS-1S	128, 256, 384, 512, 768 kbps

(D) Termination Liability for Fractional DS1 Services Purchased Under a Three or Five Year Term

Termination liability charges will apply in the following cases:

(1) In the event service is terminated prior to the expiration of the minimum service period, charges, specified in Section 5.2.5 (Minimum Period), will apply in addition to the termination liability charges identified in 7.12(D)(2) following.

(2) In the event service is terminated prior to the end of the Fractional DS1 term, a termination charge utilizing the following termination percentage will apply:

Termination Billing Period Percentage: 40%

The termination charge is calculated as follows:

(Monthly Recurring Rate) X (Months remaining in term) X (Termination Billing Period Percentage)

Example: A customer with a $500 monthly rate terminates service with 10 months remaining in a 3 year Fractional DS1 term. The termination liability charge would be calculated as follows:

($500) X (10) X (.40) = $2000

(N)

(This page filed under Transmittal No. 63)

7. Special Access Service (Cont'd) (N)

7.12 Fractional DS1 Service (Cont'd)

7.12.1 Rates and Charges - 128, 256, 384, 512, and 768 Kbps

(A) Channel Termination
- Per Point of Termination TMECS

	Recurring Charges	Nonrecurring Charges 1st CKT	Addl CKT
MTM	$125.00	$900.00	$900.00
3 Year	$115.00	$900.00	$900.00
5 Year	$105.00	$900.00	$900.00

(B) Channel Mileage
- Fixed

USOC	MTM	3 Year	5 Year
1L5XX	$50.00	$35.00	$30.00

Channel Mileage
- Per Mile

USOC	MTM	3 Year	5 Year
1L5XX	$9.00	$8.25	$8.00

(N)

7. Special Access Service (Cont'd)

7.13 Gigabit Ethernet Metropolitan Area Network (GigaMAN®) (Cont'd) (T)

7.13.1 Basic Channel Description

GigaMAN® is a fiber based, point-to-point, gigabit Ethernet service that allows customers to transport data signals between local area networks (LANs). GigaMAN® transports data signals at the rate of 1 gigabit per second (Gbps). All basic service configurations provide a single direction of transmission. (T) (T) (D) (D) (D) (D)

The following regulations will apply to GigaMAN®: (T)

(A) This service is available to customers in those LATAs served by and within the service territories of Nevada Bell Telephone Company (NBTC) only.

(B) If existing facilities do not exist Special Construction will apply. (D) (D) (D) (D)

(C) The Telephone Company considers a service interrupted when it becomes unusable to the customer because of a failure of a facility component used to furnish service under this tariff in the event that the protective controls applied by the Telephone Company result in the complete loss of service by the customer. An interruption period starts when a customer reports an inoperative service to the Telephone Company and the Telephone Company confirms that continuity has been lost, and ends when the service is operative. (T) (T) (T) (T)

7. Special Access Service (Cont'd)

7.13 Gigabit Ethernet Metropolitan Area Network (GigaMAN®) (Cont'd) (T)

7.13.1 Basic Channel Description (Cont'd)

(D) Service Provisioning (T)

(1) The customer provided equipment(CPE) must deliver the data signals for GigaMAN® transport for the subscribed data service. (T)

(2) GigaMAN® provides physical layer transport only. The Telephone Company assumes no responsibility for the through transmission of signals generated by the CPE, for the signals by the CPE, or address signaling to the extent the CPE performs addressing. Error detection and correction of data generated by the CPE is the customer's responsibility. (T) (T)

7.13.2 Channel Configuration

There are six (6) basic rate elements, which apply to GigaMAN® service: (C) (T)

(A) Local Distribution Channel (LDC)

Local Distribution Channel (same as Channel Termination) is the termination of GigaMAN® at a customer designated premise (node), as described in 7.1.2 (A), consisting of the following two elements: (T) (C)

(1) the termination for the fiber optic facilities at each node and its serving wire center.

(2) the fiber optic facility between each node and its serving wire center.

(B) Interoffice Mileage

Interoffice Transport facilities, which provide the transmission path between Serving Wire Centers associated with two customer designated premises, are comprised of Fixed and Per Mile rate elements.

7. Special Access Service (Cont'd)

7.13 Gigabit Ethernet Metropolitan Area Network (GigaMAN®) (Cont'd)

7.13.2 Channel Configuration (Cont'd)

(C) Repeater

Repeaters (Circuit Regenerators) provide essential detection and retransmission of GigaMAN® signals. Repeaters are provided as required by the Telephone Company when actual fiber facility loss between customer designated premises and/or central office locations exceed design limits. Repeaters will be located exclusively in Telephone Company central offices and are required for each successive transport segment of approximately 21.4 db.

When protection options are ordered, as set forth in Section 7.2.13(C)(4) preceding, additional repeaters may be necessary on the protected path as determined by the Telephone Company. The Repeater rate element will be applied to a protected circuit per fiber pair. (N)

(D) Local Channel Diversity

Local Channel Diversity provides for a transmission path between a designated customer premises and the standard service wire center (SWC) that is diverse from the normal/standard transmission path. With this arrangement, one or more local distribution channels will be provisioned over the standard route and one or more local distribution channels will be provisioned over the diverse route. Local channel diversity does not provide for all diversity, it only allows for diversity from the splice point closest to the customer's property line to the SWC.

Material previously appearing on this page now appears on 3rd Revised Page 7-87.2.

7. Special Access Service (Cont'd)

7.13 Gigabit Ethernet Metropolitan Area Network (GigaMAN®) (Cont'd)

7.13.2 Channel Configuration (Cont'd)

(D) Local Channel Diversity (Cont'd) (M)

If a customer desires full diversity, arrangements must be made for constructing dual entrance facilities into the customer's premises, at the customer's expense.

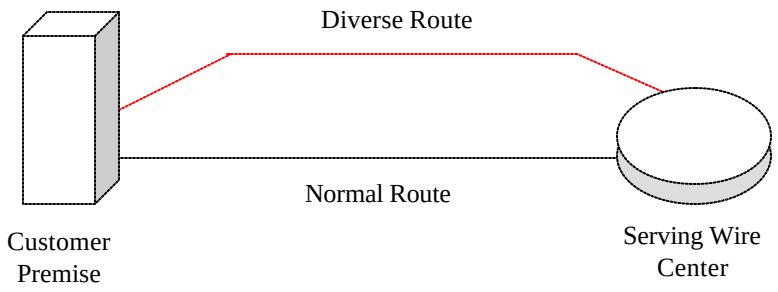

(M)

(E) Inter-Wire Center (IWC) Diversity

Inter-Wire Center (IWC) Diversity arrangements presume that each end of a GigaMAN® local distribution channel is serviced out of a different serving wire center (SWC). This arrangement provides a transmission path for GigaMAN® local distribution channels between the customer's designated SWC and the SWC at the distant end of the circuit over a transmission path that is separate from the standard transmission path between the two wire centers. IWC diversity does not provide for full diversity. It only offers interoffice diversity. If a customer desires full diversity, Alternate Wire Center Diversity must be implemented along with IWC Diversity. Additionally, arrangements must be made for constructing dual entrance facilities at the customer's premises, at the customer's expense.

Material appearing on this page previously appeared on 2nd Revised Page 7-87.1.

(This page filed under Transmittal No. 90)

(N)

7. Special Access Service (Cont'd)

7.13 Gigabit Ethernet Metropolitan Area Network (GigaMAN®) (Cont'd)

7.13.2 Channel Configuration (Cont'd)

(E) Inter-Wire Center (IWC) Diversity (Cont'd)

(1) Inter-Wire Center (IWC) Diversity Mileage Measurement

Mileage measurements for Access Services provisioned via an Inter-Wire Center Diversity, will be based on the special routing; i.e. mileage measurements will be calculated between the Intermediate Serving Wire Centers along the circuit path of the diversely routed GigaMAN® service

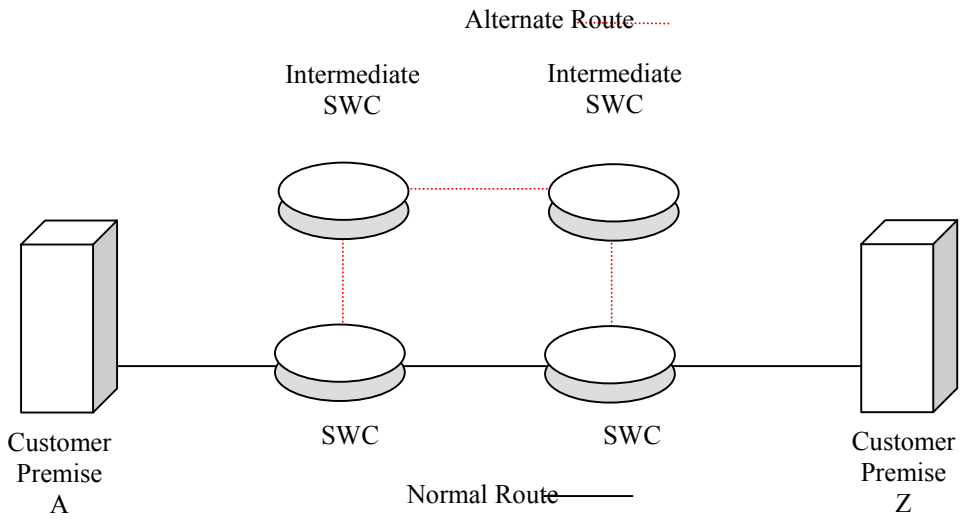

(N)

(N)

7. Special Access Service (Cont'd)

7.13 Gigabit Ethernet Metropolitan Area Network (GigaMAN®) (Cont'd)

7.13.2 Channel Configuration (Cont'd)

(F) Alternate Wire Center Diversity

Alternate Wire Center Diversity is for the local loop only. It provides a local channel transmission path for GigaMAN® service between the customer's designated premises and a wire center that is not the normal (or standard) service wire center. The Telephone Company will choose the alternate wire center closest to the customer's designated premises that is capable of providing GigaMAN® service over the alternate route. If a customer desires full diversity, arrangements must be made for constructing dual entrance facilities into the customer's premises, at the customer's expense.

If the circuit routed to the alternative wire center has Interoffice Mileage, measurements will be based on the special routing; i.e., mileage measurements will be made to the alternate wire center rather than the serving wire center from which the customer designed premises would normally obtain dial tone.

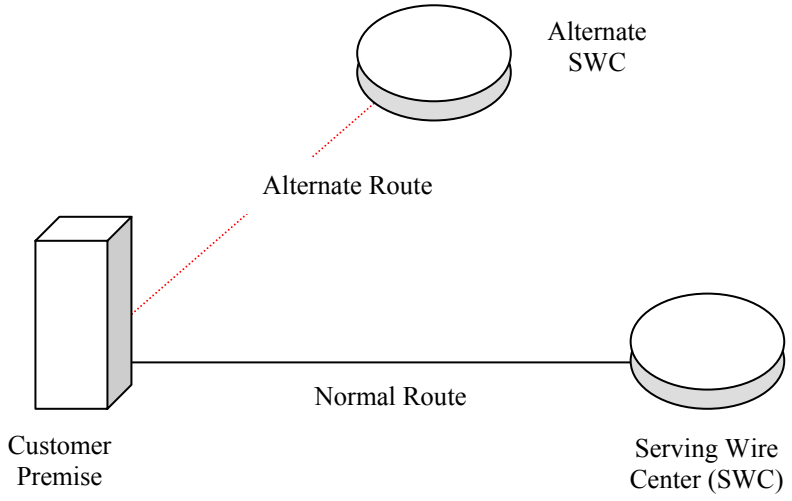

(N)

7. Special Access Service (Cont'd)

7.13 Gigabit Ethernet Metropolitan Area Network (GigaMAN)(Cont'd)

7.13.3 Non-recurring Charges (N)

Non-recurring charges are one–time charges that apply for specific work activity related to the provisioning of GigaMAN Service, as described in Section 7.2.2(C).

7.13.4 Recurring Charges

Recurring Charges are rates that apply each month or fraction thereof that the service is provided. Recurring rates apply to 12-, 36-, or 60- month periods under the terms and conditions of Term Pricing Plan (TPP), discussed in Section 7.13.6, following.

7.13.5 Monthly Extension Rates

Upon completion of a TPP, customer's service will automatically convert to the Monthly Extension Rates unless the customer requests a new TPP.

7.13.6 Term Pricing Plan (TPP)

GigaMAN is available for 12-, 36-, or 60- month periods. Monthly recurring charges apply for Local Distribution Channels (TMECS), Interoffice Transport Fixed Mileage (1L5XX), and Mileage (1L5XX) where appropriate.

(A) Renewals

At the end of a TPP period, the customer must select one of the following options within one month prior to the expiration date:

(1) Renew the service for a one, three, or five year TPP as provided in this tariff;
(2) Elect to disconnect the service upon expiration of the billing period; or
(3) Continue the service on a monthly basis at the current Monthly Extension Rates.

All services under an existing TPP that are not renewed within the period stated above will revert to Option (A)(3) above and be billed at the current Monthly Extension Rates. (N)

ACCESS SERVICE

7. Special Access Service (Cont'd)

7.13 Gigabit Ethernet Metropolitan Area Network (GigaMAN) (Cont'd)

7.13.6 Term Pricing Plan (TPP) (Cont'd)

(B) Conversions (N)

During the customer's TPP term conversions may be made to a new TPP term of the same or greater length. The expiration date of the new service must be beyond the expiration date of the original TPP term. With the new TPP, the customer incurs no liability for the remaining months on the original TPP.

An Administrative Charge is applicable when customers renew or change the length of the TPP term.

(C) Termination Liability

Customers requesting termination of service prior to expiration date of the TPP term will be liable for a termination charge, which is calculated as follows:

Billing Period	Termination Percentage
1 Year	85%
3 Year	75%
5 Year	60%

(Monthly Recurring Rate)*(Months Remaining in Billing)*(Termination Percentage) = Term. Liability Charge

Example: A GigaMAN Customer with a $6,000.00 monthly rate terminates service after 2 years with 1 year (12 months) remaining in a 3 year TPP. The termination liability would be calculated as follows:

$6,000 X 12 X .75 = $54,000.00 Termination Charge (N)

7. Special Access Service (Cont'd)

7.13 Gigabit Ethernet Metropolitan Area Network (GigaMAN) (Cont'd)

7.13.7 Moves

Moves involve a change in the physical location of one of the following

- Service rearrangement;
- Point of Termination at the customer's premises; or
- Customer's premises.

Move charges dependent upon the type of move requested by the customer.

(A) Service Rearrangement

Service Rearrangements are changes to existing (installed) services, which do not result in either a change in the minimum period requirements, as set forth in Section 7.2.2(C)(3).

(B) Moves Within the Same Building

When the move is to a new location within the same building, the Administration charge and Customer Connection charge for the service termination affected will apply. There will be no change in the minimum period requirements, as described in Section 7.2.3(A).

(C) Moves to a Different Building

Moves to a different building will be treated as a discontinuance therefore start of service, all associated nonrecurring charges, and new minimum period requirements, as described in Section 7.2.3(B) will apply.

Material previously appearing on this page now appears on 2nd Revised Page 7-91.1.

7. Special Access Service (Cont'd)

7.13 Gigabit Ethernet Metropolitan Area Network (GigaMAN)(Cont'd) (N)

7.13.7 Moves (Cont'd)

(4) GigaMAN® customers subscribing to three (3) and five (5) year Term Pricing Plans may move one end of the GigaMAN® service per the following regulations:

(a) A customer may move one end of the GigaMAN® service to a different premises in the same LATA, without incurring early termination liability charges for their existing GigaMAN® service, providing the following criteria are met, contingent upon the availability of fiber from premises to premises.

- Customers must have completed at least 15 months (for 3 year term plan), and 18 months (for 5 year term plan) of their existing GigaMAN® contracted term plan,

- The customer subscribes to a new term pricing plan period that is greater than the remaining months in the existing term pricing plan,

- Nonrecurring charges will apply where applicable,

- Spare facilities and equipment must be available or special construction charges, as set forth in Pacific Bell Telephone Company's TARIFF F.C.C. NO. 2.

The moved service will require a disconnect of the existing GigaMAN® service and placement of an order for the new GigaMAN® service for same customer of record as disconnected service.

The monthly rates for the new services(s) shall be those rates in effect at the time the new service(s) is being installed requiring a disconnect of the existing GigaMAN® service and placement of an order for new GigaMAN® service. (N)

Material previously appearing on this page now appears on 2nd Revised Page 7-91.2.

7. Special Access Service (Cont'd)

7.13 Gigabit Ethernet Metropolitan Area Network (GigaMAN)(Cont'd)

7.13.7 Moves (Cont'd)

(4) (Cont'd)

(b) The GigaMAN® service installed without protection and customer subsequently request protection options after the GigaMAN® order has been completed, and customer premises locations remain the same. This will require a change to the customer premises based Telephone Company equipment. This change will be treated as an upgrade to the GigaMAN service, and a new nonrecurring charge is applicable. This change will require a disconnect of the existing GigaMAN service and placement of an order for the new GigaMAN service for the same customer of record. With this upgrade the customer will experience an out of service condition.

(c) The GigaMAN service was installed with protection options and the customers subsequently requests a move of the channel termination within the same building afterwards. This request may require a change to the customer premises based Telephone Company equipment which will be determined by the Telephone Company. Nonrecurring charges as set forth in Section 7.13.13 are applicable (one-half the nonrecurring charge for the channel termination). With this upgrade the customer will experience an out of service condition. (T)

7.13.8 Mileage Measurement

The mileage is calculated on the airline distance between the locations involved, i.e. the serving wire centers associated with two customer designated premises and an international boundary point, a serving wire center associated with a customer designated premise and a Telephone Company Hub, a serving wire center associated with a customer designated premise and a WATS Serving Office as described in Section 7.2.5.

(This page filed under Transmittal No. 98)

7. Special Access Service (Cont'd)

7.13 Gigabit Ethernet Metropolitan Area Network (GigaMAN)(Cont'd) (N)

7.13.9 Upgrade to GigaMAN from other Access Products (M)

Other Access products may not upgrade to GigaMAN without incurring applicable Termination Liability charges, if any, on that current access product.

7.13.10 Modification of Access Service

The customer may request a modification of its Access Order at anytime prior to notification by NBTC that service is available for the customer's use. NBTC will make every effort to accommodate a requested modification when it is able to do so with the normal work force assigned to complete such an order within normal business hours. If the modification cannot be made with the work force during normal business hours, NBTC will notify the customer. If the customer still desires the Access Order Modification, NBTC will schedule a new service date. All charges for Access Order modifications will apply on a per occurrence basis as described in Section 5.2.2. (M)

7.3.11 Optional Features (N)

(A) Protection Options

Protection options are provisioned on the customers GigaMAN® service and the customer is not required to purchase a second GigaMAN® circuit for protection options. Protection options are applied on a per GigaMAN® circuit basis only.

Protection options are available where facilities and/or operating conditions permit. Where facilities and/or operating conditions do not permit, special construction charges as set forth in Pacific Bell Telephone Company's TARIFF F.C.C. NO. 2, may apply. Protection options provide additional levels of reliability to GigaMAN® service. There are multiple protection options offered. The options do not need to be the same, but both Channel Terminations of the GigaMAN® service must include some form of protection for the service to be considered protected.

The Telephone Company will design the protection optional based upon the configuration of the customers GigaMAN® service. (N)

Material appearing on this page previously appeared on Original Page 7-91.

(This page filed under Transmittal No. 90)

7. Special Access Service (Cont'd) (N)

7.13 Gigabit Ethernet Metropolitan Area Network (GigaMAN)(Cont'd)

7.3.11 Optional Features (Cont'd)

(A) Protection Options (Cont'd)

Additional repeaters may be necessary on the protected path as determined by the Utility as set forth in Section 7.4.16(B) following.

Protection switching in less than 50 milliseconds will occur on GigaMAN® services with protection options, with the exception of Power Protection which is not switch protected. Protection options are offered with a Service Level Agreements (SLA) that target a service availability of 99.999%. SLA's are not applicable in the event of cable cut in any unprotected portion of the GigaMAN® service fiber path or when customer requested modifications to the service require down time.

GigaMAN® Protection Options are offered as follows:

(1) Equipment Only Protection – per Termination End

(2) Equipment Plus Fiber Path Protection

(a) Equipment Plus Alternate Wire Center Path Protection – per Terminating End

(b) Equipment Plus Channel Termination Path Protection – per Terminating End

(c) Inter Wire Center Path Protection – per Interoffice Segment

(3) Power Protection

(B) Equipment Only Protection

Equipment Only Protection offers one GigaMAN® signal routed on two different fiber pairs that co-exist in the same cable and conduit structure that terminate into two distract and separate network terminating equipment devices at the customer's premises. (N)

7. Special Access Service (Cont'd) (N)

7.13 Gigabit Ethernet Metropolitan Area Network (GigaMAN)(Cont'd)

7.3.11 Optional Features (Cont'd)

(B) Equipment Only Protection (Cont'd)

All protected configurations have one working and one standby path. In event of a failure of the customer's transmission path, the GigaMAN® equipment will switch, within 50 milliseconds of detection, the customer's transmission to a dedicated standby path. In the event of a failure to both fiber transmission paths, an out of service condition will result. This form of protection can only be ordered per channel termination for each protected GigaMAN® service, and may also apply to the Inter-Wire center segment if the GigaMAN® service is served by more than one serving wire center.

If a customer requests complete protection extending to the SBC serving wire center from their premises location when utilizing Equipment Protection, they must request diverse entrance facilities into their premises at each end from the nearest SBC splice point closest to the customer premises location, this work is subject to special construction charges as set forth in Pacific Bell Telephone Company's TARIFF F.C.C. NO. 2.

(C) Equipment Plus Fiber Path Protection

Equipment Plus Fiber Path Protection offers varying degrees of path protection for each channel termination of the GigaMAN® service, plus the inter-wire segment if the service is served by more than one serving wire center, and is offered as follows:

(1) Equipment Plus Alternate Wire Center Path Protection

Equipment Plus Alternate Wire Center Path Protection offers one GigaMAN® signal routed over one fiber pair of the protected GigaMAN® service from the customer's premises to the customer's normal serving wire center, and a duplicate GigaMAN® signal routed over a diversely routed fiber pair to the Alternate Wire center selected by the Telephone Company.

(N)

(This page filed under Transmittal No. 90)

7. Special Access Service (Cont'd) (N)

7.13 Gigabit Ethernet Metropolitan Area Network (GigaMAN)(Cont'd)

7.3.11 Optional Features (Cont'd)

(C) Equipment Plus Fiber Path Protection (Cont'd)

(1) Equipment Plus Alternate Wire Center Path Protection (Cont'd)

If any location(s) between the two fiber paths is closer than ten feet, the location(s) will be disclosed to the customer. The customer will determine accept the engineered path or agree to pay special construction charges as set forth in Pacific Bell Telephone Company's TARIFF F.C.C. NO. 2, to provide a completely diverse route where the ten foot allowance is not acceptable to the customer.

Where facilities are not available, the Customer may select Equipment Only Protection for an inter-office segment. This option can be selected for one or both channel terminations of the GigaMAN service.

All protected configurations have one working and one standby path. In the event of a failure of the customer's transmission path, the GigaMAN service will switch to a dedicated standby path within 50 milliseconds of detection. In the event of a failure to both fiber transmission paths, an out of service condition will result. This form of protection can only be ordered per channel termination for each protected GigaMAN service.

If a customer requests complete protection extending to the SBC serving wire center from their premises location when utilizing Equipment Protection Plus Alternate Wire Center Path Protection, they must request diverse entrance facilities into their premises at each end from the nearest SBC splice point closest to the customer premise location. This work is subject to special construction charges as set forth in Pacific Bell Telephone Company's TARIFF F.C.C. NO. 2. (N)

7. Special Access Service (Cont'd) (N)

7.13 Gigabit Ethernet Metropolitan Area Network (GigaMAN)(Cont'd)

7.3.11 Optional Features (Cont'd)

(C) Equipment Plus Fiber Path Protection (Cont'd)

(2) Equipment Plus Channel Termination Path Protection

Equipment Plus Channel Termination Path Protection offers a duplicate GigaMAN® signal routed over two diversely routed fiber paths, to the customer's normal serving wire center.

If any location(s) between two fiber paths is closer than ten feet, the location(s) will be disclosed to the customer. The customer will determine to accept the engineered path or agree to pay special construction charges as set forth in Pacific Bell Telephone Company's TARIFF F.C.C. NO. 2, to provided a completely diverse route where the ten foot allowance is not acceptable to the customer.

All protected configurations have one working and one standby path. In the event of a failure of the customer's transmission path, GigaMAN® technology will switch within 50 milliseconds of detection, the customer's transmission to a dedicated standby path. In the event of failure to both fiber transmission to a dedicated standby path, or failure to both fiber transmission paths, an out of service condition will result.

This form of protection can only be ordered per channel termination for each protected GigaMAN® service, from the customers premises location, or from the manhole/splice point nearest the customer premises), to the Utility serving wire center. (N)

ACCESS SERVICE

7. Special Access Service (Cont'd) (N)

7.13 Gigabit Ethernet Metropolitan Area Network (GigaMAN)(Cont'd)

7.3.11 Optional Features (Cont'd)

(C) Equipment Plus Fiber Path Protection (Cont'd)

(2) Equipment Plus Channel Termination Path Protection (Cont'd)

If a customer requests complete protection extending to the SBC serving wire center from their premises location when utilizing Equipment Protection Plus Channel Termination Path Protection, they must request diverse entrance facilities into their premises at each end from the nearest SBC splice point closest to the customer premises location. This work is subject to special construction charges as set forth in Pacific Bell Telephone Company's TARIFF F.C.C. NO. 2.

(3) Inter-Wire Center Path Protection

Inter-Wire Center Path Protection offers a duplicate GigaMAN® signal routed over two diversely routed fiber paths, between the two serving wire centers or alternate wire centers. Path protection starts at the nearest manhole outside the Telephone Company serving wire center. Inter Wire Center Path Protection must be ordered with either Equipment Only, Channel Termination Path Protection or Alternate Wire Center Path Protection.

If any location(s) between the two fiber paths is closer than ten feet, the location(s) will be disclosed to the customer. The customer will determine to accept the engineered path or agree to pay special construction charges as set forth in Pacific Bell Telephone Company's TARIFF F.C.C. NO. 2, to provide a completely diverse route where the ten foot allowance is not acceptable to the customer. (N)

(This page filed under Transmittal No. 90)

7. Special Access Service (Cont'd) (N)

7.13 Gigabit Ethernet Metropolitan Area Network (GigaMAN)(Cont'd)

7.3.11 Optional Features (Cont'd)

(C) Equipment Plus Fiber Path Protection (Cont'd)

(3) Inter Wire Center Path Protection (Cont'd)

All protected configurations have one working and one standby path. In the event of a failure of the customer's transmission path, GigaMAN® technology will switch, within 50 milliseconds of detection, the customer's transmission to a dedicated standby path. In the event of a failure to both fiber transmission paths, an out of service condition will result.

(4) Power Protection

Power Protection provides GigaMAN® customers with battery backup for up to eight (8) hours to maintain GigaMAN® equipment in the event of a commercial AC power failure.

Power Protection is offered on a per equipment bay capacity basis, per customer premise, and depending upon the number of GigaMAN® services for the GigaMAN® customer of record. The Telephone Company will apply the power protection rate elements based upon the circuit capacity, and more than one element may be applicable. The Telephone Company will determine the design and engineering requirements for Power Protection for GigaMAN® customers. (N)

7. Special Access Service (Cont'd) (N)

7.13 Gigabit Ethernet Metropolitan Area Network (GigaMAN)(Cont'd)

7.3.11 Optional Features (Cont'd)

(C) Equipment Plus Fiber Path Protection (Cont'd)

(4) Power Protection (Cont'd)

Customers in multi-tenant buildings will require separate equipment and bays dedicated to each customer.

The addition of Power Protection to existing GigaMAN® service may result in temporary service interruption.

Power Protection is not available for installations using the wall mounted cabinet.

Customers are responsible for providing floor space for power equipment as set forth in Section 2.3.3 preceding.

7.3.12 Allowance for Service Interruptions

A Service Level Agreement (SLA) is offered with fully-protected GigaMAN® service, which provides the customer with a performance commitment that includes financial compensation if the service does not perform as described.

Service availability performance 99.999% is offered on a GigaMAN® service with protection (defined as Equipment Plus Path Protection) for every segment of the service.

If this SLA is not met, the customer will be entitled to a credit equal to 100% of the monthly rate for the period of the interruption of service affecting that rate element(s), not to exceed the total monthly charges for the services. Only one such credit in a billing period will apply. (N)

7. Special Access Service (Cont'd) (N)

7.13 Gigabit Ethernet Metropolitan Area Network (GigaMAN)(Cont'd)

7.3.12 Allowance for Service Interruptions (Cont'd)

The service is considered interrupted when the customer reports a service disruption of greater than ten (10) consecutive seconds to the Telephone Company and the Telephone Company confirms that continuity of its service has been lost.

In order to qualify for this credit, the outage must be determined by the Telephone Company to be in its network and the failure occurred in that part of the service with the Protection. SLA adjustments are not available in the event of a cable cut, in any unprotected portion of the GigaMAN® service fiber path, or due to customer requested modifications to the service that may require down time.

SLA's are applicable to customers who purchase Equipment Plus Alternate Wire Center Path Protection or Equipment Plus Channel Termination Path Protection on both ends of a GigaMAN service (both channel terminations) as well as Inter-Wire Center Path Protection when applicable. The customer is responsible for notifying the Telephone Company when the service parameter within the calendar month falls below the committed level. The customer must request a service credit adjustment within 25 days after the end of the month when the failure occurred. (N)

7. Special Access Service (Cont'd)

7.13. Gigabit Ethernet Metropolitan Area Network (GigaMAN®) (Cont'd)

7.13.13 Rates and Charges General Description (T)

(A) Recurring Charges

	USOC	Monthly Extension	Term Pricing Plan 12 Mo.	36 Mo.	60 Mo.	NRC
(1) Local Distribution Channel						
- Per Point of Termination Terminating Bit Rate 1 Gbps - All States	TMECS	$3,800.00	$3,300.00	$2,850.00	$2,500.00	
(2) Interoffice Transport Mileage						
- Fixed - All States	1L5XX	$250.00	$250.00	$200.00	$100.00	
- Per Mile 1 Gbps - All States	1L5XX	$125.00	$125.00	$100.00	$75.00	
(3) Repeater -each	VU4	$2,500.00	$2,400.00	$1,150.00	$850.00	
(4) Diversity Options						
Local Channel Diversity -Per Channel Terminating Bit Rate 1 Gbps -All States	CPALX	$750.00	$750.00	$750.00	$750.00	0.00
Inter Wire Center Diversity -Per Channel Terminating Bit Rate 1 Gbps -All States	CPATX	$500.00	$500.00	$500.00	$500.00	0.00
Alternate Wire Center Diversity -Per Channel Termination bit Rat 1 Gbps -All States	CPAAX	$1,200.00	$1,200.00	$1,200.00	$1,200.00	0.00

(This page filed under Transmittal No. 90)

7. Special Access Service (Cont'd)

7.13 Gigabit Ethernet Metropolitan Area Network (GigaMAN®) (Cont'd)

7.13.13 Rates and Charges General Description (Cont'd) (T)

(A) Recurring Charges (N)

	USOC	Monthly Extension	Term Pricing Plan 12 Mo.	36 Mo.	60 Mo.	NRC
(5) Protection – per GigaMAN® service arranged						
-Equipment Only Protection, per terminating end	CPAEX	1,500.00	$1,375.00	1,050.00	900.00	$625.00
-Equipment Plus Alternate Wire Center Path Protection, per terminating end	CPAFX	2,460.00	2,050.00	1,600.00	1,400.00	1,400.00
-Equipment Plus Channel Termination (Local Channel) Path Protection, per terminating end	CPAGX	2,190.00	1,825.00	1,425.00	1,225.00	1,225.00
-Inter Wire Center Path Protection, per interoffice segment	CPAHX	475.00	$375.00	150.00	100.00	625.00
-Power Protection[1]	VBBGX	700.00	625.00	480.00	435.00	475.00

[1] Power protection rate elements are applicable as set forth in 7.3.11(C)(4) preceding. (N)

Material previously appearing on this page now appears on Original Page 7-93.1.

(This page filed under Transmittal No. 90)

7. Special Access Service (Cont'd) (N)

7.13 Gigabit Ethernet Metropolitan Area Network (GigaMAN®) (Cont'd)

7.13.13 Rates and Charges General Description (Cont'd) (N)

(B) Installation and Rearrangement Charges (M)

All States

	USOC	12 Months	36 Months	60 Months	
(1) Administrative Charge per Order	ORCMX	$60.00	$60.00	$60.00	
(2) Design Central Office Connection					(M)
Charge per circuit	NRMCK	$230.00	$230.00	$230.00	(N)
(3) Customer Connection					(M)
Charge per					(M)
termination	NRBBL	$1,500.00	$1,500.00	$1,500.00	(M)

Material appearing on this page previously appeared on 2nd Revised Page 7-93.

(This page filed under Transmittal No. 90)

7. Special Access Service (Cont'd) (M)

7.14 Individual Case Filings (T)

Rates and charges for Special Access Service provided on an individual case basis are filed following: (M) (M)

Certain material appearing on this page previously appeared on Original Page 7-85.

(This page filed under Transmittal No. 63)