6. Switched Access Service

6.1 General

Switched Access Service provides a two-point communication path between a customer’s premises and an end user’s premises through the use of common terminating, common switching, Switched Transport facilities and common subscriber plant of the Telephone Company. Switched Access Services may not be used as substitutes for the Telephone Company's local and/or general exchange services. Switched Access Service provides for the ability to originate calls from an End User's premises to a customer's designated premises, or to Expanded Interconnection Service and to terminate calls from a customer's designated premises, or Expanded Interconnection Service to an End User's premises in the LATA where it is provided. Specific references to material describing the elements of Switched Access Service are provided in 6.1.1 and 6.1.3 following. (C) (C)

Rates and charges for Switched Access Service are set forth in 6.8 following. The application of rates for Switched Access Service is described in 6.7 following. Rates and charges for services other than Switched Access customer's interLATA toll message service, may also be applicable when Switched Access Service is used in conjunction with these other services. Descriptions of such applicability are provided in 6.2.

(D)

(D)

(This page filed under Transmittal No. 2057)

6. Switched Access Service (Cont'd)

6.1 General (Cont'd)

(D)
|
(D)

6.1.1 Switched Access Service Arrangements and Manner of Provision

(A) Switched Access Service Arrangements

Switched Access Service is provided in the form of access arrangements of optional features and Basic Service Elements (BSEs) called (1) Access Line Arrangement (ALA), (2) Access Trunk Arrangement with two switched access options ATA-950 and ATA-101XXXX, (3) Direct Inward Dialed PBX Trunk, (4) Dedicated Network Access Link and in four optional service arrangements of standard and optional features called (1) Feature Group A (FGA), (2) Feature Group B (FGB), (3) Feature Group C (FGC), and (4) Feature Group D (FGD). In addition 500, 800 and 900 Access Services are available through the use of ATA-101XXXX and Feature Group D.

The arrangements are differentiated by their technical characteristics, e.g., line side vs. trunk side connection at the Telephone Company entry switch, and the manner in which an end user accesses them in originating calling, e.g., with or without an access code. A description of ALA, ATA-950 and ATA-101XXXX, DID, DNAL and each Feature Group is in 6.2 following. Descriptions of the 500, 800 and 900 Access Services are in 6.2. following.

6. Switched Access Service (Cont'd)

6.1 General (Cont'd)

6.1.1 Switched Access Service Arrangements and Manner of Provision (Cont'd)

(B) Switched Transport Service Arrangements

Switched Transport permits a one-way or two-way voice frequency transmission path composed of facilities determined by (C)
the Telephone Company which permit the transport of calls in the (C)
originating direction and in the terminating direction – though not simultaneously.

Switched Transport is comprised of various facilities, connections, features and functions. The Switched Transport (N)
rate category is composed of three rate elements; Entrance Facilities, Direct Trunked Transport and Tandem Switched (T)
Transport. The Tandem Switching element applies in addition (D)
when Tandem Switched transport is provided. A Multiplexing (D)
charge may also apply when facilities of one capacity are connected to facilities of another capacity.

Rate elements for Switched Transport are defined in 6.7.1 (T)
following. (T)

(D)

(D)

Rates and nonrecurring charges for those rate elements are (N)
located in 6.82 following. (N)

(This page filed under Transmittal No. 2057)

6. Switched Access Service (Cont'd)

6.1 General (Cont'd)

6.1.1 Switched Access Service Arrangements and Manner of Provision (Cont'd)

(B) Switched Transport Service Arrangements (Cont'd)

Multiplexing charges will apply when a higher capacity Entrance Facility or EISCC is interconnected with a lower capacity Direct Trunked Transport or Tandem Switched Transport, when a higher capacity Direct Trunked Transport is interconnected with a lower capacity Direct Trunked (T) Transport or Tandem Switched Transport at a hub location, when other than a Direct Trunked Transport DS1 transport channel is interconnected to more than one end office switch within an end office location.

When the customer orders Direct Trunked Transport or (T) Tandem Switched Transport and requests such transport to be interconnected with the facilities of another customer, the interconnection will be provided if the customer requesting the interconnection has authorization for such interconnection and use of the facility from the other customer. For such an arrangement, the charges for the Direct Trunked Transport or the Tandem Switched (T) Transport and any associated Tandem Switching or (T) additional Multiplexing charges will be billed to the ordering customer. No billing of facility charges will be made to the customer ordering the Direct Trunked Transport or the Tandem Switched Transport. No adjustment of the facility charges will be made to the customer providing the facilities. The customer permitting another customer to use its facilities bears the responsibility to obtain payment for the use of its facilities from another customer.

(This page filed under Transmittal No. 2059)

6. Switched Access Service (Cont'd)

6.1 General (Cont'd)

6.1.1 Switched Access Service Arrangements and Manner of Provision (Cont'd)

(B) Switched Transport Service Arrangements (Cont'd)

Rates and charges for these elements and the optional features available are set forth in 6.8 following. Sx

Switched Transport is ordered under the Access Order provisions set forth in Section 5 (Ordering Options for Switched and Special Access Service). Ordering provisions as set forth in 2.4.8 (Billing of Access Service Provided by More Than One Telephone Company) will apply when more than one Exchange Telephone Company is involved in the provision of a Switched Transport facility. Following are descriptions of the available facilities, interfaces and features.

(C) Transport Channels and Multiplexing

Switched Transport is comprised of specific channel types. These connections may be either analog or digital. Analog connections are differentiated by spectrum and bandwidth; digital connections are differentiated by bit rate. Depending upon the spectrum, bandwidth or bit rate selected by the customer, multiplexing, as described following, may also be required to allow interconnection with other transport channels or to a Telephone Company switch.

When lower capacity transport is interconnected to higher capacity transport, the transport channel shall be specified by the customer.

Transport channel types available (VG/DS0, DS1 and DS3) are described in 7.2.3(A) and 7.2.9(A) following. Sx

x Issued on not less than 2 days' notice under authority of Special Permission No. 93-992 of the Federal Communications Commission to defer the effective date from December 1, 1993 to December 30, 1993.

6. Switched Access Service (Cont'd)

6.1 General (Cont'd)

6.1.1 Switched Access Service Arrangements and Manner of Provision (Cont'd)

(C) Transport Channels and Multiplexing (Cont'd)

Multiplexing is a chargeable optional feature of Switched transport. The customer has the option of ordering digital facilities at a DS3 level (44.736 Mbps) to a Telephone Company Hub for multiplexing to 28 channels at a DS1 level (1.544 Mbps) or at a DS1 level for multiplexing to 24 channels at a DS0/VG level(64 Kbps).

Use of Multiplexing allows customers to interconnect Entrance Facilities or EISCC of one capacity or bandwidth to Direct Trunked Facilities or Tandem Trunked Facilities of a different capacity or bandwidth. Multiplexing also allows for the interconnection of Direct Trunked Facilities or Tandem Trunked Facilities with end offices or access tandems requiring capacity or bandwidth different from that of the interconnecting facility.

Three multiplexing alternatives, DS1 to Voice Grade Multiplexing, Options 1 & 2 and DS3 to DS1 Option 1 Multiplexing will continue to be provided as described in 7.2.9(D)(3)(b)(e) (High Capacity Service) following. (T)

When ordering, the customer will specify the desired multiplexing hub selected from the National Exchange Carrier Association, Inc. (NECA) Tariff F.C.C. No. 4.

Shared Use as set forth in Section 7.4.8 (Shared Use Analog (T)
Digital High Capacity and SONET Ring and Access Services) (T)
following does not apply to Switched transport.

Multiplexing can be applied to a Switched Access Entrance Facility or Direct Trunked transport.

(This page filed under Transmittal No. 2059)

ACCESS SERVICE

6. Switched Access Service (Cont'd)

6.1 General (Cont'd)

6.1.1 Switched Access Service Arrangements and Manner of Provision (Cont'd)

(D) Fiber Advantage^{sm}Service

Fiber Advantage^{sm} DS3 and DS3x3 Month-to-Month and for DS3, DS3x3, an DS3x12 Rate Stability Payment Plans Rates and Charges are set forth in Section 6.8.2 following. Regulation that apply to this Service are set forth in Section 7.4.11 following. Minimum Periods for Fiber Advantage^{sm} DS3, DS3x3and DS 3x12 service apply as set forth in Section 5.2.6 (A) and 7.4.4 following. N

6. Switched Access Service (Cont'd)

6.1 General (Cont'd)

6.1.1 Switched Access Service Arrangements and Manner of Provision (Cont'd)

(A) Switched Access Service Arrangements (Cont'd)

UNIFORM ONA SERVICE NAME CROSS REFERENCE (T)

The following matches the Telephone Company's Basic Service Element (BSE) (T)
names to the industry standard feature names for each BSE. (T)

PACIFIC BELL	UNIFORM ONA SERVICE NAME
Automatic Number Identification	Calling Billing Number Delivery - FGD Protocol
Hunt Group Arrangement	Multiline Hunt Group
Hunt Group - C.O. Announcement	Multiline Hunt Group - C.O. Announcements
Uniform Call Distribution (UCD) - Arrangement	Multiline Hunt Group - Uniform Call Distribution Line Hunting
Uniform Call Distribution With Queuing	Multiline Hunt Group - UCD With Queuing
Hunt Group Overflow	Multiline Hunt Group - Overflow
Nonhunting Number for Use with Hunt Group or Uniform Call Distribution Arrangement	Multiline Hunt Group - Individual Access to Each Port in Hunt Group
Three Way Call Transfer	Three Way Call Transfer
Answer Supervision - Lineside	Answer Supervision with a Line side Interface
Direct Inward Dialing - Circuit Termination	Called Directory Number Delivery via DID
DID Trunk Queuing	DID Trunk Queuing
Calling Number Delivery via ICLID	Calling Number Delivery

(This page filed under Transmittal No. 2059)

6. Switched Access Service (Cont'd)

6.1 General (Cont'd)

6.1.1 Switched Access Service Arrangements and Manner of Provision (Cont'd)

(A) Switched Access Service Arrangements (Cont'd)

UNIFORM ONA SERVICE NAME CROSS REFERENCE (T)

The following matches The Telephone Company's Basic Service Element (BSE) names to the industry standard feature names for each BSE. (T) (T)

PACIFIC BELL	UNIFORM ONA SERVICE NAME
Public Packet Switching Fast Select Acceptance	Fast Select Acceptance - Packet
Fast Select - Initiate	Fast Select Request - Packed
Closed User Groups	Closed User Group - Packet
Hunt Group - Internal	Hunt Groups - Packet
Data Termination Equipment Backup	Call Redirection - Packet
Call Denial On Line or Hunt Group	(To be determined)
Service Code Denial On Line or Hunt Group	(To be determined)
Preselection for Data Services	Preselection for Data Services
Reverse Charge Acceptance - Packet	Reverse Charge Acceptance - Packet
Make Busy Key	Make Busy Key
Forwarded Call Information	Message Desk (SMDI)
Activate Message Waiting Indicator - Audible	Message Waiting Indicator - Activation (Audible)
Activate Message Waiting Indicator - Visual	Message Waiting Indicator - Activation (Visual)

(This page filed under Transmittal No. 2059)

6. Switched Access Service (Cont'd)

6.1 General (Cont'd)

6.1.1 Switched Access Service Arrangements and Manner of Provision

(D) Manner of Provision

Switched Access is furnished in either quantities of lines or trunks. ALA, DNALs and FGA are furnished on a per-line basis. FGB, ATA-950, ATA-101XXXX and DID are provided on a per-trunk basis. FGC and FGD are furnished on a per-trunk basis. Trunks and lines are differentiated by type and directionality of traffic. (C)

(1) Traffic Types

There are six major traffic types. These are: Originating, Terminating, Directory Assistance, Operator Services, Public Switched Digital Service (PSDS), and 64 CCC. Originating traffic type represents access capacity within a LATA for carrying traffic from the end user to the customer; Terminating traffic type represents access capacity within a LATA for carrying traffic from the customer to the end user; Directory Assistance traffic type represents access capacity within a LATA for carrying Directory Assistance traffic from the customer to a Directory Assistance Location; and Operator Services traffic type represents access capacity within a LATA for carrying Operator Services traffic to or from the customer, to or from the Operator Services System (OSS) location. Public Switched Digital Service (PSDS) Access traffic type represents access capability within a LATA for carrying digital traffic at speeds up to 56Kbps between the customer and the customer's end users. 64 CCC traffic type represents access capability within a LATA for carrying digital traffic at speeds up to 64 Kbps between the customer and the customer's end users.

6. Switched Access Service (Cont'd)

6.1 General (Cont'd)

6.1.1 Switched Access Service Arrangements and Manner of Provision (Cont'd)
(D) Manner of Provision (Cont'd)
(1) Traffic Types (Cont'd)

When ordering capacity for Switched Access, the customer must at a minimum specify such access capacity in terms of Originating traffic type or Terminating traffic type or PSDS Access Traffic type. PSDS Access is available with ATA-101XXXX and FGD only. Directory Assistance traffic type is used for ordering Directory Assistance Access Service as set forth in 9.2 following. When ordering capacity for 500, 800 or 900 Access Service, the customer must specify that the traffic type is Originating. (T)

Because some customers will wish to further segregate their originating FGC, ATA-101XXXX, FGD or 800 Access Service traffic into separate trunk groups, Originating traffic type is further categorized into Domestic, 500, 800, 900, Operator, IDDD, and Operator Transfer Service. Domestic traffic type represents access capacity for carrying only domestic traffic other than 500, 800, 900, Operator and Operator Transfer Service traffic; IDDD traffic type represents access capacity for carrying only international traffic; and, 500, 800, 900, Operator and Operator Transfer Service traffic type represents access capacity for carrying only 500, 800, 900 Operator or Operator Transfer Service traffic respectively. When ordering such types of access, the customer must specify Domestic, 500, 800, 900, Operator, Operator Transfer Service or IDDD traffic types.

For Switched Access Services, the customer at a minimum, shall specify on the customer's order for service, the Switched Transport facilities to be provided (i.e., Entrance Facility, EISCC, Direct Trunked Transport or Tandem Switched Transport). When specifying the Switched Transport facilities to be provided, the customer must indicate if the facilities to be provided are existing (i.e. spare transmission paths) or are new. (T)

(This page is filed under Transmittal No. 2059)

6. Switched Access Service (Cont'd)

6.1 General (Cont'd)

6.1.1 Switched Access Service Arrangements and Manner of Provision (Cont'd)

(D) Manner of Provision (Cont'd) Sx

(2) Design and Traffic Routing of Switched Access Service Sx

Sx

For Switched Access Service, the customer desired line or trunk directionality and/or traffic routing of the Switched Access Service between the customer's premises and the entry switch are specified on the customer's order for service. Sx Sx Sx

x Issued on not less than 2 days' notice under authority of Special Permission No. 93-992 of the Federal Communications Commission to defer the effective date from December 1, 1993 to December 30, 1993.

6. Switched Access Service (Cont'd)

6.1 General (Cont'd)

6.1.1 Switched Access Service Arrangements and Manner of Provision (Cont'd)

(D) Manner of Provision (Cont'd)

(2) Design and Traffic Routing of Switched Access Service (Cont'd)

For FGB and ATA-950 the customer may order the optional feature Customer Specification of Switched Transport Termination. (T)

(3) Determination of Number of Transmission Paths
For Switched Access Service, which is ordered on a per line or per trunk basis, the customer specifies the number of transmission paths in the order for service.

(This page filed under Transmittal No. 2059)

6. Switched Access Service (Cont'd)

6.1 General (Cont'd)

6.1.1 Switched Access Service Arrangements and Manner of Provision (Cont'd)

(D) Manner of Provision (Cont'd)

(4) For FGD or ATA-101XXXX Switched Access Service with the CCSAC optional feature, i.e. out of band signaling, as described in 6.1.3 (A),(2),(d), an SS7 Signaling Connection is required between the Telephone Company STP and the customer's SPOI. When ordering the CCSAC optional feature, the customer shall specify that all traffic be equipped with out of band signaling. All rate elements set forth in 6.8.10 following apply to each SS7 Signaling Connection ordered. (T)

(5) Determination of Number of End Office Transport Terminations

For analog entry switches, a termination will be provided for each transmission path provided. For digital entry switches, an equivalent termination will be provided for each transmission path provided.

(6) Feature Groups and Access Arrangements Cannot be Mixed in a Service Group

During the feature group transition period as set forth in the F.C.C. Order 89-79 adopted June 13, 1991 (see 6.1 preceding) customers may not mix access service at the group level to an end office or tandem. All access service must be ordered and will be provisioned similarly either as feature group service or access arrangements and cannot be mixed. However, customers may order individual circuits either as feature group or access arrangements during the transition period.

(This page is filed under Transmittal No. 2059)

ACCESS SERVICE

6. Switched Access Service (Cont'd)

6.1 General (Cont'd)

6.1.1 Switched Access Service Arrangements and Manner of Provision (Cont'd)

Certain regulations previously found on this page can now be found on Page 140.1.

6. Switched Access Service (Cont'd)

6.1 General (Cont'd)

6.1.2

6.1.3 Rate Categories

There are three rate categories which apply to Access Arrangements and Feature Groups Services: (T)

- Switched Transport (described in 6.1.3(A) following)
- Local Switching (described in 6.1.3(B) following)
- Common Line (described in Sections 3 and 4 preceding) (D)

(D)

In addition to the four rate categories, there is an Information Surcharge that applies to all Switched Access Services and 500, 800, 900 Access Service Charges that apply to ATA-101XXXX and FGD Switched Access. The description and application of these charges are set forth in 6.7.16 and 6.7.17 following. (T)

(This page filed under Transmittal No. 2059)

6. Switched Access Service (Cont'd)

6.1 General (Cont'd)

Rate Categories (Cont'd)

The following diagram depicts a generic view of the components of Switched Access Service and the manner in which the components are combined to provide a complete access service.

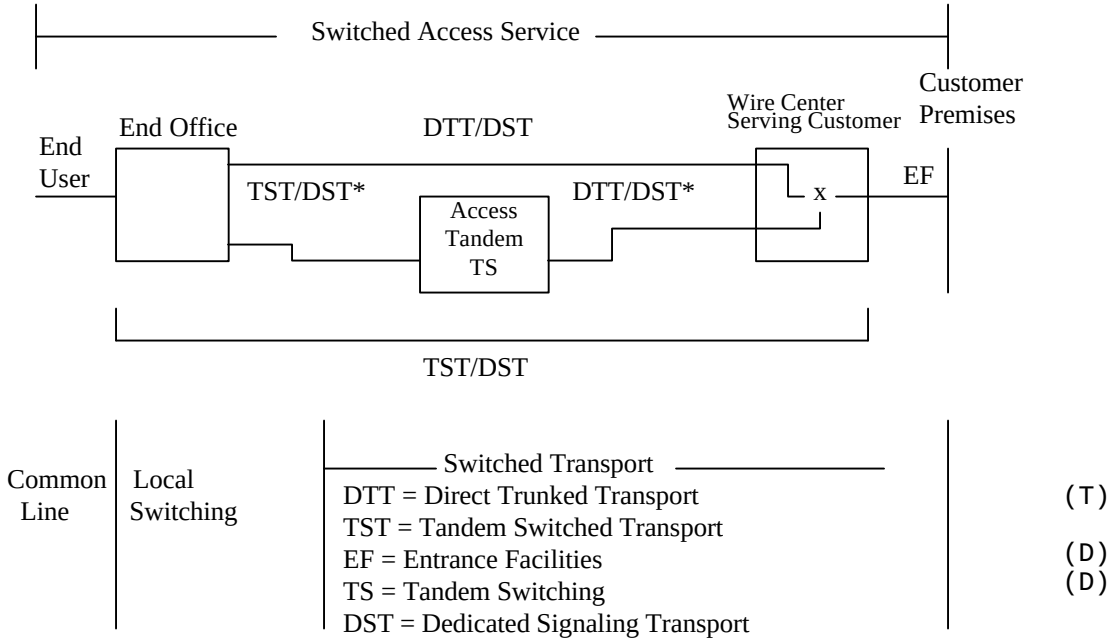

(T)
(D)
(D)

* Option as defined in Transport Application, 6.7.1(D)(9) following

LS - Local Switching (D)

CL - Common Line

Common Line access is provided under Sections 3 (Carrier Common Line Access Service) and 4 (End User Access Service) preceding. (T) (T)

(This page filed under Transmittal No. 2059)

ACCESS SERVICE

PURSUANT TO THE FEDERAL COMMUNICATIONS COMMISSION'S ORDER IN CC DOCKET NO. 83-1145, RELEASED MARCH 16, 1984, THIS PAGE CANCELS ORIGINAL PAGES 143 THROUGH 154.

* NEXT TARIFF PAGE IS 1ST REVISED PAGE 155.

6. Switched Access Service (Cont'd)

6.1 General (Cont'd)

6.1.3 Rate Categories (Cont'd)

(A) Switched Transport

Switched Transport elements are defined as follows:

(1) Entrance Facility

Entrance Facility is defined as the transmission path between the customer's premises and the serving wire center where the customer would normally obtain local dial tone. The Entrance Facility rate is a non distance sensitive flat monthly recurring charge. The Entrance Facility may be ordered with an analog or digital interface. DS0/VG, DS1 and DS3 interface groups are defined in 6.1.3(A)(4) following. (T)

Switched Access Entrance Facility rates and charges are set forth in 6.8.2.

(This page filed under Transmittal No. 2059)

6. Switched Access Service (Cont'd)

6.1 General (Cont'd)

6.1.3 Rate Categories (Cont'd)

(A) Switched Transport (Cont'd)

(2) Direct Trunked Transport

Direct Trunked Transport is defined as the dedicated transmission path between the customer's Serving Wire Center and an access tandem, hub or end office where the customer's originating and/or terminating traffic is switched or between a hub and an access tandem or end office. Direct Trunked Transport is a distance sensitive mileage rate element as set forth in 6.8.2 following.

The Direct Trunked Transport mileage rate is calculated on the airline distance between the serving wire center (T) associated with a customer designated premise and the access tandem, hub or end office switch or between a hub and an access tandem or end office. To determine the rate, compute the mileage using the V&H coordinates method, as set forth in the NECA Tariff F.C.C. No. 4. (T) Exceptions to the mileage measurement rules are set forth in 6.7.13 following.

(This page filed under Transmittal No. 2059)

6. Switched Access Service (Cont'd)
6.1 General (Cont'd)

6.1.3 Rate Categories (Cont'd)

(A) Switched Transport (Cont'd)

(3) Tandem Switched Transport

Tandem Switched Transport is provided as five sub-elements: (T)

- Tandem-Switched Transmission/Common Transport
- Host Remote Transmission
- Tandem Switching
- Dedicated Tandem Trunk Port
- Tandem End Office Multiplexing

(This page filed under Transmittal No. 2059)

6. Switched Access Service (Cont'd)

6.1 General (Cont'd)

6.1.3 Rate Categories (Cont'd)

(A) Switched Transport (Cont'd)

(3) Tandem Switched Transport (Cont'd)

(a) Tandem Switched Transmission/Common Transport

Tandem Switched Transmission/Common Transport has two rates: a per access minute of use rate and a per access minute of use per mile rate. The per access minute of use rate applies to the non distance sensitive portion of the Tandem Switched Transport for the termination of both ends of the facility. The per access minute of use per mile rate applies to the distance sensitive portion of the Tandem Switched Transport facility. When the mileage for Tandem Switched Transmission/Common Transport is zero, these rates will not apply. (T) (T) (T) (T)

The per access minute of use and a per access minute of use per mile rate also applies to interoffice links that are provided for the common use of all customers but which are not switched through an access tandem. The Telephone Company will identify this application of Tandem Switched Transmission as Common Transport. (T)

Mileage measurement is described in 6.7.13.

(This page filed under Transmittal No. 2059)

6. Switched Access Service (Cont'd)

6.1 General (Cont'd)

6.1.3 Rate Categories (Cont'd)

(A) Switched Transport (Cont'd)

(3) Tandem Switched Transport (Cont'd)

Tandem Switched Transport is provided at the rates and charges as set forth in 6.8.2 following. To calculate the Tandem Switched Transport Termination rate (as specified in Section 6.8.2), the customer's total access minutes will be multipled by the rate per access minute of use to determine the charge. To calculate the Tandem Switched Transport Mileage rate, the customer's total access minutes will be multiplied by total Miles (as determined in 6.7.13 following) and the rate per access minute of use per Mile (as specified in 6.8.2 following) to determine the charge. Both rate elements are applied to the customer's total access minutes to develop this Tandem Switched Transport charge, e.g.:

Tandem Switched Transport Charge per MOU = (A) + (B x X)
Where A = Tandem Switched Transport Termination rate
B = Tandem Switched Transport Mileage rate
X = Transport Mileage

The application of these rates with respect to individual Switched Access Services is as set forth in 6.7.1(D) and (E) following.

(b) Host Remote Transmission

The Host Remote Transmission sub element provides (T)
for certain interoffice links that are provided for
the common use of all customers between a host (T)
office and a remote switching system or remote |
switch where the call originates or terminates. (T)
When both Tandem Switched Transmission and Host (T)
Remote Transmission are applicable, mileage is
measured separately.

(This page filed under Transmittal No. 2059)

6. Switched Access Service (Cont'd)

6.1 General (Cont'd)

6.1.3 Rate Categories (Cont'd)

(A) Switched Transport (Cont'd)

(3) Tandem Switched Transport (Cont'd)

(c) Tandem Switching

Tandem switching provides for the function of switching traffic from the customer's serving wire center through the access tandem to the customer designated end office switch(es). (MT) (M)

The tandem switching rate for Tandem Switched Transport is a usage sensitive charge based on the originating and terminating minutes of use via the access tandem switch.

(d) Tandem End Office Multiplexing

Tandem End Office Multiplexing provides for the multiplexing equipment functionality on the end office side of the tandem switch and for terminating FGA, ALA minutes of use between the dial tone office and the end office. (T)

(e) Dedicated Tandem Trunk Port

The Dedicated Tandem Trunk Port provides for the port associated with each in service dedicated trunk terminating on the serving wire center side of the access tandem.

Certain material appearing on this page formerly appeared on 4th Revised Page 158.1.

(This page filed under Transmittal No. 2059)

ACCESS SERVICE

6. Switched Access Service (Cont'd)

6.1 General (Cont'd)

6.1.3 Rate Categories (Cont'd)

(A) Switched Transport (Cont'd)

(3) Tandem Switched Transport (Cont'd)

(D)

(D)

Rates contained in this transmittal are subject to subsequent adjustment, effective retrospectively back to the transmittal's original effective date, in the event the Commission or a court subsequently authorizes Pacific to correct its rates to allow it to calculate its price cap formulas to exclude USF contributions from the operation of the X-factor, or in the event of any other adjustment pursuant to an order of the Commission or a court.

(This page filed under Transmittal No. 1988)

6. Switched Access Service (Cont'd)

6.1 General (Cont'd)

6.1.3 Rate Categories (Cont'd)

(A) Switched Transport (Cont'd)

When the customer has ordered FGD with the CCSAC optional feature, as set forth in 6.1.3(A)(5)(d) and SS7 Signaling Connections, as set forth in 6.1.3 (A)(4) following, the Telephone Company will provide SS7 out of band signaling in accordance with the technical specifications set forth in Technical Reference TR-TSV-000905. (T) (T)

SS7 Signaling Connections are provisioned for LIDB Service, and interconnection is supported by interconnecting STPs as described in TR-TSV-000905 and PUB-L-780023-PB/NB.

When the customer has ordered Feature Group D with the 64 CCC optional feature, as set forth in 6.1.3(A)(5)(e), the Telephone Company will provide 64 CCC in accordance with the technical specifications set forth in TR-NWT-000938 and TR-TSV-000962.

(This page filed under Transmittal No. 2059)

6. Switched Access Service (Cont'd)

6.1 General (Cont'd)

6.1.3 Rate Categories (Cont'd)

(A) Switched Transport (Cont'd) Sx

(4) Interface Groups Sx

Five Interface Groups are provided for terminating the Switched Transport at the customer's premises. Each Interface Group provides a specified premises interface (e.g., two-wire, four-wire, DS1, etc.). Where transmission facilities permit, the individual transmission path between the customer's premises and the first point of switching may at the option of the customer be provided with optional features as set forth in (5) and (6) following. Sx Sx Sx

As a result of the customer's access order and the type of Telephone Company transport facilities serving the customer's premises, the need for signaling conversions or two-wire to four-wire conversions, or the need to terminate digital or high frequency facilities in channel bank equipment may require that Telephone Company equipment be placed at the customer's premises. For example, if a voice frequency interface is ordered by the customer and the Telephone Company facilities serving the customer's premises are digital, then Telephone Company channel bank equipment must be placed at the customer's premises in order to provide the voice frequency interface ordered by the customer.

Interface Group 1 is provided with Type C Transmission Specifications, and Interface Groups 2, 5, 6 and 9 are provided with Type A or B Transmission Specifications, depending on the type of service and whether the Switched Access Service is routed directly or through an access tandem. All Interface Groups are provided with Data Transmission Parameters. Descriptions of the various Interface Groups are set forth following; more detailed descriptions are set forth in Technical Reference TR-NPL-000334. Sx Sx

x Issued on not less than 2 days' notice under authority of Special Permission No. 93-992 of the Federal Communications Commission to defer the effective date from December 1, 1993 to December 30, 1993.

6. Switched Access Service (Cont'd)

6.1 General (Cont'd)

6.1.3 Rate Categories (Cont'd)

(A) Switched Transport (Cont'd)

(4) Interface Groups (Cont'd)

(a) When PSDS Access is ordered in conjunction with ATA-101XXXX or FGD, it requires the use of a dedicated trunk group equipped with Interface Group 6.

This service allows a customer to establish a connection between the customer's premises and an end user's premises over facilities capable of transmitting digital data at 56 Kbps. Technical Publication TR-NWT-000334 provides compatibility and interface requirements for using the PSDS Access optional features.

(b) The CCSAC optional feature is available only with FGD. The 64 CCC optional feature is available only with FGD with CCSAC. Feature Group D trunks are provided using Interface Groups 1, 2, 6 and 9. SS7 signaling connections, and 64 CCC are provided using Interface Group 6. Technical Publication TR-TSY-000905 and PUB-L-780023-PB/NB provide the technical requirements for CCSAC and the SS7 signaling connection. Technical Publications TR-NWT-000938 and TR-TSV-000962 provide the additional technical and SS7 protocol requirements for 64 CCC. (T)

Each Interface Group has premises interface codes available as a function of the Telephone Company switch supervisory signaling and Feature Group or Access Arrangement. A complete list of these codes can be found in Technical Reference TR-NWT-000334.

(This page is filed under Transmittal No. 2059)

ACCESS SERVICE

6. Switched Access Service (Cont'd)

6.1 General (Cont'd)

6.1.3 Rate Categories (Cont'd)

(A) Switched Transport (Cont'd)

(4) Interface Groups (Cont'd)

Int. Group	USOC	Transmission	Feature Group Availability	Standard Signaling Arrangements
1	TPP1X	2-wire voice frequency	ALA,FGA ATA-950,FGB,FGC, ATA-101XXXX,FGD (FGC,ATA-101XXXX and FGD only available if directly trunked) Not available in association with ATA-950,FGB, C, ATA-101XXXX or D when 1st point of switching provides only 4-wire termination.	Loop Supervisory ALA,FGA - loop start or ground start (C) FGB,C,D,ATA-950,ATA-101XXXX(C) - Reverse Battery Signaling; for 2-way calling, E&M signaling (C)
2	TPP2X	4-wire voice frequency	ALA,FGA,FGB, ATA-950,FGC,FGD, ATA-101XXXX	Loop supervisory signaling ALA,FGA - Loop start or ground start (C) ATA-950,FGB,C,D,ATA-101XXXX(C) - Reverse battery; for 2-way calling, E&M signaling

(This page filed under Transmittal No. 1999)

ACCESS SERVICE

6. Switched Access Service (Cont'd)

6.1 General (Cont'd)

6.1.3 Rate Categories (Cont'd)

(A) Switched Transport (Cont'd) Sx

(4) Interface Groups (Cont'd) Sx

Int. Group	USOC	Transmission	Availability	Standard Signaling Arrangements
				Sx
5	TPP5X	Master-group level analog transmission (channelizing capability of up to 600 voice frequency transmission paths	Feature Groups only	Individual transmission path SF supervisory signaling
				Sx

x Issued on not less than 2 days' notice under authority of Special Permission No. 93-992 of the Federal Communications Commission to defer the effective date from December 1, 1993 to December 30, 1993.

ACCESS SERVICE

6. Switched Access Service (Cont'd)

6.1 General (Cont'd)

6.1.3 Rate Categories (Cont'd)

(A) Switched Transport (Cont'd) Sx

(4) Interface Groups (Cont'd) Sx

Int. Group	USOC	Transmission	Availability	Standard Signaling Arrangements
6	TPP6X	DS1 level digital transmission (1.544 Mbps channelizing capability of up to 24 voice frequency transmission paths)	All Feature Groups and Access Arrangements	With digital carrier terminations, the Telephone Company will provide at the 1st point of switching DS1 signal in D3/D4 format; individual-transmission path bit-stream supervisory signaling
	SL7	DSO-A Circuit	FGD with Common Channel Signaling Access Capability or Line Identification Data Base Service or 64 Clear Channel Capability	For SS7 out of band signaling the Telephone Company will provide an SS7 Signaling Connection at the DS0-A level provisioned on a DS1 facility.

x Issued on not less than 2 days' notice under authority of Special Permission No. 93-992 of the Federal Communications Commission to defer the effective date from December 1, 1993 to December 30, 1993.

6. Switched Access Service (Cont'd)

6.1 General (Cont'd)

6.1.3 Rate Categories (Cont'd)

(A) Switched Transport (Cont'd) Sx

(4) Interface Groups (Cont'd) Sx

Int. Group	USOC	Transmission	Availability	Standard Signaling Arrangements
9	TPP9X	DS-3 level digital transmission (44.736 Mbps, channelizing capability of up to 672 voice frequency transmission paths)	All Feature Groups and Access Arrangements	With digital carrier terminations, the Telephone Company will provide at the 1st point of switching DS1 signal in D3/D4 format; individual-transmission path bit-stream supervisory signaling

Sx

x Issued on not less than 2 days' notice under authority of Special Permission No. 93-992 of the Federal Communications Commission to defer the effective date from December 1, 1993 to December 30, 1993.

6. Switched Access Service (Cont'd)

6.1 General (Cont'd)

6.1.3 Rate Categories (Cont'd)

(A) Switched Transport (Cont'd)

(5) Zone Pricing C

Switched Access Direct Trunked Transport DS1 (1.544 Mbps)and DS3 (44.736 Mbps) services are divided into 3 pricing zones. The pricing zone for each serving wire center is identified in the NECA Tariff F.C.C. No. 4. The rate elements included in zone pricing are as follows: N

(a) Entrance Facility

The rate for each Entrance Facility is determined by the serving wire center.

(b) Direct Trunked Transport

Direct Trunked Transport mileage calculations will be made in accordance with Section 7.4.5, following. When Direct Trunked Transport is computed between wire centers in different pricing zones, the rates of the higher rate pricing zone shall apply.

(c) Multiplexing

The rates for multiplexing will be determined by the billing location of the multiplexing arrangement. N

6. Switched Access Service (Cont'd)

6.1 General (Cont'd)

6.1.3 Rate Categories (Cont'd)

(A) Switched Transport (Cont'd) Sx

x Issued on not less than 2 days' notice under authority of Special Permission No. 93-992 of the Federal Communications Commission to defer the effective date from December 1, 1993 to December 30, 1993.

6. Switched Access Service (Cont'd)

6.1 General (Cont'd)

6.1.3 Rate Categories (Cont'd)

(A) Switched Transport (Cont'd) Sx

x Issued on not less than 2 days' notice under authority of Special Permission No. 93-992 of the Federal Communications Commission to defer the effective date from December 1, 1993 to December 30, 1993.

6. Switched Access Service (Cont'd)

6.1 General (Cont'd)

6.1.3 Rate Categories (Cont'd)

(A) Switched Transport (Cont'd) Sx

x Issued on not less than 2 days' notice under authority of Special Permission No. 93-992 of the Federal Communications Commission to defer the effective date from December 1, 1993 to December 30, 1993.

6. Switched Access Service (Cont'd)

6.1 General (Cont'd)

6.1.3 Rate Categories (Cont'd)

(A) Switched Transport (Cont'd) Sx

x Issued on not less than 2 days' notice under authority of Special Permission No. 93-992 of the Federal Communications Commission to defer the effective date from December 1, 1993 to December 30, 1993.

6. Switched Access Service (Cont'd)

6.1 General (Cont'd)

6.1.3 Rate Categories (Cont'd)

(A) Switched Transport (Cont'd) Sx

x Issued on not less than 2 days' notice under authority of Special Permission No. 93-992 of the Federal Communications Commission to defer the effective date from December 1, 1993 to December 30, 1993.

6. Switched Access Service (Cont'd)

6.1 General (Cont'd)

6.1.3 Rate Categories (Cont'd)

(A) Switched Transport (Cont'd) Sx

(5) Nonchargeable Optional Features Sx

Where transmission facilities permit, the Telephone Company will, at the option of the customer, provide the following optional features in association with Switched Transport. The optional features are provided as set forth in following. Sx

(a) Supervisory Signaling

Where the transmission parameters permit, and where signaling conversion is required by the customer to meet its signaling capability, the customer may order an optional supervisory signaling arrangement for each transmission option path provided. The types of supervisory signaling available are described in Technical Reference TR-NPL-000334.

Interface Groups 1 and 2	FID
DX Supervisory Signaling	NCI ++DX+
E&M Type 1	NCI ++EA+
E&M Type II	NCI ++EB+
E&M Type III	NCI ++EC+
Interface Group 2	**FID**
SF Supervisory Signaling	NCI ++SF+
Tandem Supervisory Signaling	NCI ++EX+

Interface Groups 5, 6 and 9 Sx

Individual transmission path SF Supervisory Signaling in Telephone Company central offices where the entry switch provides an analog, i.e., non-digital interface to the transport termination and a portion of the facility between the analog entry switch and the customer's premises is analog. These optional supervisory signaling arrangements are not available in combination with the CCSAC optional feature, as described in 6.1.3 (A),(5),(d) following. Sx

x Issued on not less than 2 days' notice under authority of Special Permission No. 93-992 of the Federal Communications Commission to defer the effective date from December 1, 1993 to December 30, 1993.

6. Switched Access Service (Cont'd)

6.1 General (Cont'd)

6.1.3 Rate Categories (Cont'd)

(A) Switched Transport (Cont'd)

(5) Nonchargeable Optional Features (Cont'd)

(b) Customer Specified Entry Switch Receive Level (TLV)

This feature allows the customer to specify the receive transmission level at the first point of switching. The range of transmission levels which may be specified is described in Technical Reference TR-NTW-000334. This feature is available with Interface Groups 2, 5, 6 and 9 for FGA and (T)
FGB and Interface Groups 2, 6 and 9 for ALA and (T)
ATA-950.

(c) Customer Specification of Switched Transport Termination (NL S+T+)

This option allows the customer to specify, for ATA-950 and FGB routed directly to an end office (T)
or access tandem, a four-wire termination of the Switched Transport at the entry switch in lieu of a Telephone Company selected two-wire termination. This option is available only when the ATA-950 or FGB arrangement is provided with Type B (T)
Transmission Specifications.

6. Switched Access Service (Cont'd)

6.1 General (Cont'd)

6.1.3 Rate Categories (Cont'd)

(A) Switched Transport (Cont'd)

(5) Nonchargeable Optional Features (Cont'd)

(d) Common Channel Signaling Access Capability (CCSAC)

This optional feature allows the customer to exchange signaling for call set-up via SS7 out of band signaling. This option is available only with FGD or ATA-101XXXX. This option requires the establishment of a SS7 Signaling Connection between the customer's signaling point of interface (SPOI) and the Telephone Company's Signaling Transfer Point (STP), as set forth in 6.1.3(A),(4) preceding. This option is available with incidental interlata service as amended by the Telecommunications Act of 1996, Section 271 (g) and defined in PUB L - 780023 - PB/NB. Rates and Charges for the SS7 Signaling Connection are set forth in 6.8.10 following. Information concerning incidental interlata service is set forth in Section 18 following. (T)

Each SS7 Signaling Connection provides for digital transmission at a speed of 56 Kbps. The connection to the Telephone Company STP can be made from either the customer's Signaling Point (SP) which requires two 56 Kbps circuits or from the customer's STP which requires four 56 Kbps circuits.

6. Switched Access Service (Cont'd)

6.1 General (Cont'd)

6.1.3 Rate Categories (Cont'd)

(A) Switched Transport (Cont'd)

(5) Nonchargeable Optional Features (Cont'd)

(e) 64 Clear Channel Capability (CCC)

This option is available only with FGD with the CCSAC optional feature as set forth in 6.1.3(A)(5)(d), preceding.

Clear Channel Capability (CCC) is designated as a new traffic type and requires the establishment of a new minimum period as described in 5.2.6 (E), preceding. (T)

64 CCC will be provided in connection with FGD with CCSAC where appropriate Telephone Company equipment and other facilities exist, as specified in the NECA Tariff F.C.C. No. 4. Technical Reference TR-NWT-000938 provides the technical specifications for 64 CCC. The SS7 protocol requirements for 64 CCC are specified in TR-TSV-000962. (T)

(This page filed under Transmittal No. 2059)

6. Switched Access Service (Cont'd)
6.1 General (Cont'd)
6.1.3 Rate Categories (Cont'd)

(A) Switched Transport (Cont'd)
(5) Nonchargeable Optional Features (Cont'd)
(f) Tandem Signaling

Pursuant to the Commission's Order in CC Docket No. 91-141, adopted May 19, 1994, signaling information necessary for tandem switching will be provided from equal access end offices. This option is available with either MF or SS7 signaling. Tandem Signaling will provide the CIC and OZZ in association with MF signaling. TNS parameter will be provided with SS7 signaling. (T)

Tandem signaling is an originating offering utilizing FGD Switched Access Service. It will be provided on one-way originating FGD trunks from equal access end offices to a Tandem Switching Provider's (TSP) point of termination.

TSPs can terminate switched access traffic to Telephone Company end offices or access tandems over any currently tariffed Feature oup Service. The customer ordering the terminating Feature Group service will be the customer of record and billed the terminating usage. This customer may be either a TSP or a customer of the TSP. (T) (T)

If the TSP is the customer of record and requests the Telephone Company to separately bill the traffic usage to it's multiple customers, the TSP must provide to the Telephone Company billing tapes in a format to be mutually agreed upon by the Telephone Company and the TSP. These tapes must be provided in a standard EMI format and received by the Telephone Company within a mutually agreed upon timeframe.

(This page filed under Transmittal No. 2059)

6. Switched Access Service (Cont'd)

6.1 General (Cont'd)

6.1.3 Rate Categories (Cont'd)

(A) Switched Transport (Cont'd)

(5) Nonchargeable Optional Features (Cont'd)

(f) Tandem Signaling

Technical specifications for Tandem Signaling are as set forth in Technical Reference GR-3334-CORE. (T)

A maximum of 4 OZZ codes (MF) or circuit codes (SS7) per CIC per end office will be provided. The Telephone Company will control and assign the OZZ codes to the customer ordering this feature. FGD trunks with Tandem Signaling may not be alternately routed to the Telephone Company's access tandem. (T)

(This page filed under Transmittal No. 2059)

6. Switched Access Service (Cont'd)

6.1 General (Cont'd)

6.1.3 Rate Categories (Cont'd)

(A) Switched Transport (Cont'd)

(6) Chargeable Optional Features

(a) Operator Transfer Service

Operator Transfer Service is an arrangement in which the Telephone Company's operator transfers 0- end user dialed calls to the subscriber of operator transfer service designated by the end user.

- If the Telephone Company's operator cannot perform the requested service when:

(1) the end user has requested a customer that does not subscribe to Operator Transfer Service

or

(2) the end user has not designated a customer perference,

the Telephone Company's operator will advise the end user to call directory assistance or dial 00- as appropriate.

- All rates and charges normally applicable to FGD,i.e., nonrecurring, monthly recurring, and wage sensitive, apply to Operator Transfer Service. (T)

- Additionally, a charge as specified in 6.8.2(I)(1) following, is assessed to the customer per 0- call transferred. (T)

(This page filed under Transmittal No. 2059)

6. Switched Access Service (Cont'd)

6.1 General (Cont'd)

6.1.3 Rate Categories (Cont'd)

(A) Switched Transport (Cont'd)

(6) Chargeable Optional Features (Cont'd)

(b) Multiplexing

This option allows the customer to convert a DS3 (44.736 Mbps) to 28 DS1 channels or a DS1 (1.544 Mbps) to 24 DS0/VG channels (64 Kbps).

A charge is specified in 6.8.2 following per multiplexing arrangement.

(c) Carrier Identification Parameter (CIP)

Technical specifications for Carrier Identification Parameter (CIP) are set forth in Technical References GR-394-CORE and GR-905-CORE. (T)

Carrier Identification Parameter is an optional feature which identifies and transmits the CIC within the SS7 out of band call set up, known as the initial address message (IAM), associated with each call sent to subscribing customers. CIP is only available with originating FGD Switched Access Service from suitably equipped SS7 out of band signaling end offices and access tandems. When CIP is provided, the switch will transmit the 3 or 4 digit CIC of the presubscribed line or the CIC selected when the end user places a call using 101XXXX dialing. CIP is provided per trunk group at a monthly recurring rate as specified in 6.8.2(K)(3). (T) (T) (T)

(This page filed under Transmittal No. 2059)

6. Switched Access Service (Cont'd)

6.1 General (Cont'd)

6.1.3 Rate Categories (Cont'd)

(A) Switched Transport (Cont'd)

(7) Dedicated Network Access Link M

Description: A Dedicated Network Access Link (DNAL) provides a dedicated analog data channel from the customer's premises and a designated central office which contains the specific network features required by the customer. The DNAL is used to transmit network information or network control information from the customer to the network, or to deliver network control information from the network to the customer's premises.

(a) Service Types: There are two types of DNAL and each has its own characteristics and are subdivided into one or more of the following:
- Transmission specifications
- Bandwidth
- Optional features and functions

Type 1 DNAL is defined in Technical Reference TR-TSY-000335 as Voice Grade 2 and Type 2 is Voice Grade 10. Customers can order basic service and select from a list of available features, functions and channel interfaces, that they desire to meet specific communications requirements. The Type 2 DNAL has the following optional features and functions available:

Conditioning
- C-Type
- Improved Attenuation Distortion
- Improved Envelope Delay Distortion
- Improved Termination
- Data Capability M

Certain regulations on this page formerly appeared on page 157.14.

6. Switched Access Service (Cont'd)

6.1 General (Cont'd)

6.1.3 Rate Categories (Cont'd)

(A) Switched Transport (Cont'd)

(7) Dedicated Network Access Link (Cont'd)

(b) There are three basic rate categories which apply to DNALs:

- Transport Terminations
- Transport Mileage
- Optional Features and Functions

(I) Transport Termination

The Transport Termination rate category provides for a communication path between the customer designated premises and the serving wire center of that premises and from the serving wire center to the designated central office which contains the specific network features required by the customer.

(II) Transport Mileage

The mileage to be used to determine the monthly rate for the Transport Mileage is calculated on the airline distance between the serving wire center associated with a customer designated premises and the Telephone Company central office where the service terminates. The serving wire center associated with a customer designated premises is the serving wire center from which the customer designated premises would normally obtain dial tone. Transport Mileage rate has two rates: a fixed rate and a per mile rate. To determine the rate to be billed, compute the mileage using the V&H Coordinates Method, as set forth in the NECA Tariff F.C.C. No. 4. (T)

(This page filed under Transmittal No. 2059)

6. Switched Access Service (Cont'd)

6.1 General (Cont'd)

6.1.3 Rate Categories (Cont'd)

(A) Switched Transport (Cont'd) Sx

(7) Dedicated Network Access Link (Cont'd) Sx

(b) There are three basic rate categories which apply to DNALs: (Cont'd)

(III) Optional Features and Functions

This rate category provides for optional features and functions which may be added to a DNAL service to improve its quality or utility to meet specific communications requirements. These are not necessarily identifiable with specific equipment, but rather represent the end result in terms of performance characteristics which may be obtained by using various combinations of equipment. Although the equipment necessary to perform a specified function may be installed at various locations along the path of the service, it will be charged for as a single rate element.

There are five optional features and functions which apply to DNALs. They are listed below.

Conditioning

Conditioning provides more specific transmission characteristics for DNAL service. There are three types of conditioning available: C-Type, Improved Attenuation Distortion, and Improved Envelope Delay Distortion.

- C-Type conditioning is provided for the additional control of attenuation distortion and envelope delay distortion on an analog data service. The attenuation distortion and envelope delay distortion specifications are set forth in TR-TSY-000335.

x Issued on not less than 2 days' notice under authority of Special Permission No. 93-992 of the Federal Communications Commission to defer the effective date from December 1, 1993 to December 30, 1993.

6. Switched Access Service (Cont'd)

6.1 General (Cont'd)

6.1.3 Rate Categories (Cont'd)

(A) Switched Transport (Cont'd) Sx

(7) Dedicated Network Access Link (Cont'd) Sx

(b) There are three basic rate categories which apply to DNALs: (Cont'd)

(III) Optional Features and Functions (Cont'd)

Conditioning (Cont'd)

- Improved attenuation distortion is provided for supplementary control of attenuation distortion. Improved attenuation distortion specifications are set forth in Technical Reference TR-TSY-000335.

- Improved Envelope Delay Distortion is provided for supplementary control of envelope delay distortion. Improved envelope delay distortion specifications are set forth in Technical Reference TR-TSY-000335.

Improved Termination

- Improved termination provides for the ordered impedance (nominally 600 ohms at 1 kHz), a wide range of transmission level points and simplex reversal, if specified. Improved termination is applicable on effective four-wire transmission at the four-wire point of termination. Telephone Company equipment is required at the customer's premises where this option is ordered. The improved termination parameters are set forth in Technical Reference TR-TSY-000335.

x Issued on not less than 2 days' notice under authority of Special Permission No. 93-992 of the Federal Communications Commission to defer the effective date from December 1, 1993 to December 30, 1993.

6. Switched Access Service (Cont'd)

6.1 General (Cont'd)

6.1.3 Rate Categories (Cont'd)

(A) Switched Transport (Cont'd)

(7) Dedicated Network Access Link (Cont'd)

(b) There are three basic rate categories which apply to DNALs: (Cont'd)

(III) Optional Features and Functions (Cont'd)

Improved Return Loss

- Improved return loss provides for more stringent Echo Control specification. Improved return loss is applicable on effective two-wire transmission at the two-wire point of termination. The transmission path must be four-wire at one point of termination (POT) and two-wire at the other point of termination. Placement of Telephone Company equipment may be required at the customer's premises with the two-wire POT. Improved return loss specifications are set forth in Technical Reference TR-TSY-000335.

Data Capability

- Data capability provides transmission characteristics suitable for data communications. Specifically, data capability provides for the control of Signal to C-Notched Noise Ratio and intermodulation distortion. When a service (T) equipped with data capability is used for voice communications, the quality of the voice transmission may not be satisfactory.

(This page filed under Transmittal No. 2059)

6. Switched Access Service (Cont'd)

6.1 General (Cont'd)

6.1.3 Rate Categories (Cont'd)

(A) Switched Transport (Cont'd) Sx

(7) Dedicated Network Access Link (Cont'd) Sx

(b) There are three basic rate categories which apply to DNALs: (Cont'd)

(III) Optional Features and Functions (Cont'd)

Signaling Capability

- Signaling capability provides for the process of transferring circuit status information over a distance to control such conditions as circuit idle, circuit busy, seizure, and disconnect. Another function of signaling is station alerting and addressing when required. Generally, the signaling used on DNAL service is in-band and is furnished by the end user. In-band signaling utilizes tones within the frequency spectrum of the channel to perform the various signaling functions necessary. Signaling specifications are set forth in Technical Reference TR-TSY-000335.

(c) Technical Specifications

DNAL service provides voice frequency transmission capability in the normal frequency range of 300 to 3000 Hz and may be terminated two-wire or four-wire. The technical specifications for these parameters (except for dropouts, gain hits, and phase hits) are set forth in Technical Reference TR-TSY-000335. The technical specifications for dropouts, phase hits, and gain hits are set forth in Technical Reference PUB 41004, Table 4.

x Issued on not less than 2 days' notice under authority of Special Permission No. 93-992 of the Federal Communications Commission to defer the effective date from December 1, 1993 to December 30, 1993.

6. Switched Access Service (Cont'd)

6.1 General (Cont'd)

6.1.3 Rate Categories (Cont'd)

(A) Switched Transport (Cont'd) Sx

(7) Dedicated Network Access Link (Cont'd) Sx

x Issued on not less than 2 days' notice under authority of Special Permission No. 93-992 of the Federal Communications Commission to defer the effective date from December 1, 1993 to December 30, 1993.

6. Switched Access Service (Cont'd)

6.1 General (Cont'd)

6.1.3 Rate Categories (Cont'd)

(A) Switched Transport (Cont'd) Sx

(7) Dedicated Network Access Link (Cont'd) Sx

x Issued on not less than 2 days' notice under authority of Special Permission No. 93-992 of the Federal Communications Commission to defer the effective date from December 1, 1993 to December 30, 1993.

6. Switched Access Service (Cont'd)

6.1 General (Cont'd)

6.1.3 Rate Categories (Cont'd)

(B) Local Switching

This rate category provides for (1) local end office switching, i.e., the common switching functions associated with the various Switched Access Service arrangements, (2) the termination of Switched Transport at end offices, (3) the termination of common lines and WATS Access Lines at end offices and (4) intercept functions, i.e., the termination of certain calls at a Telephone Company intercept operator or recording, (5) the Dedicated End Office Port which provides for each dedicated line or trunk terminating in the end office port, and (6) the Shared End Office Trunk Port which provides for the use of the shared end office trunk ports for termination of common transport trunks for tandem routed traffic. Tx || Tx Nx || Nx

This Category includes usage sensitive rates and both chargeable and nonchargeable optional features.

(a) Usage Sensitive Rates - The usage sensitive rates are applied on a per minute of use basis and are divided into the following categories:

(i) LS1 provides local switching functions for FGA and FGB, except for FGA and FGB used to terminate traffic to a WATS Access Line (WAL) provided from an equal access office.

(ii) LS1A provides local switching functions for the ALA and ATA-950 except when the ALA or ATA-950 is used to terminate traffic to a WATS Access Line (WAL) provided from an equal access end office.

(iii) LS2 provides local switching functions for FGA and FGB used to terminate traffic to a WAL provided from an equal access end office, FGC, FGD and 800 or 900 Access Service. Where end offices are appropriately equipped, international dialing may also be provided as a capability of LS2, i.e., the capability of switching international calls with service prefix and address codes having more digits than can be switched through a standard FGC or FGD end office.

x Filed in compliance with FCC Orders DA 97-2358 and FCC 97-158, as amended.
(This page filed under Transmittal No. 1959.)

6. Switched Access Service (Cont'd)

6.1 General (Cont'd)

6.1.3 Rate Categories (Cont'd)

(B) Local Switching (Cont'd)

(a) Usage Sensitive Rates (Cont'd)

(iv) LS2D provides local switching functions for ATA-950 and ALA used to terminate traffic to a WAL provided from an equal access end office, ATA-101XXXX, 800 Access Service and 900 Access Service. Where end offices are appropriately equipped, international dialing may also be provided as a capability of LS2D, i.e., the capability of switching international calls with service prefix and address codes having more digits than can be switched through a standard ATA-101XXXX end office.

The application of these rates is set forth in 6.7 following.

Rates for Local Switching are set forth in 6.8 following. (D)

(b) Optional Features - Various Common Switching, Transport Termination and WATS Access Line Termination optional features are available and are described in 6.3. following.

(D)

(D)

Certain material appearing on this page now appears on 5th Revised Page 156.1.

(This page filed under Transmittal No. 2059)

ACCESS SERVICE

6. Switched Access Service (Cont'd)

6.1 General (Cont'd)

6.1.3 Rate Categories (Cont'd)

D

D

Certain regulations previously found on this page can now be found on Page 158.

6. Switched Access Service (Cont'd)

6.1 General (Cont'd)

6.1.3 Rate Categories (Cont'd)

D

D

Certain regulations previously found on this page can now be found on Page 194.

6. Switched Access Service (Cont'd)

6.1 General (Cont'd)

6.1.3 Rate Categories (Cont'd)

Certain regulations previously found on this page can now be found on Page 194.

6. Switched Access Service (Cont'd)

6.1 General (Cont'd)

6.1.3 Rate Categories (Cont'd)

Certain regulations previously found on this page can now be found on Page 194.1.

6. Switched Access Service (Cont'd)

6.1 General (Cont'd)

6.1.3 Rate Categories (Cont'd)

D

D

6. Switched Access Service (Cont'd)

6.1 General (Cont'd)

6.1.3 Rate Categories (Cont'd)

6.1.4

Certain regulations previously found on this page can now be found on page 120.1.

6. Switched Access Service (Cont'd)

6.1 General (Cont'd)

6.1.5

Certain regulations previously found on this page can now be found on page 122.4.

6. Switched Access Service (Cont'd)

6.1 General (Cont'd)

6.1.6 Acceptance Testing

At no additional charge, the Telephone Company will, at the customer's request, cooperatively test, at the time of installation, the following parameters: loss, C-Message noise, C-notched noise, 3-tone slope, d.c. continuity and operational signaling. When the Switched Transport is provided with Interface Groups 2, 5, 6 and 9, and the Transport Termination is two-wire (i.e., there is a four-wire to two-wire conversion in Switched Transport), balance parameters (equal level echo path loss) may also be tested.

Entrance Facility or Direct Trunked Transport acceptance tests will include tests for the parameters applicable to the service as specified in the order for service. (T)

6.1.7 CCSAC and 64 CCC Testing Requirements

For FGD with the CCSAC optional feature, network compatibility and other operational tests will be performed cooperatively by the Telephone Company and the customer. These tests are as specified in the PUB-L-780023-PB/NB and Technical Reference TR-TSY-000905. These tests must be successfully completed prior to providing the CCSAC optional feature. (T) (T)

For FGD with the 64 CCC optional feature additional network compatibility and other operational tests will be performed to verify compliance with specifications in Technical References TR-NWT-000938 and TR-TSV-000962. (T)

(This page filed under Transmittal No. 2059)

6. Switched Access Service (Cont'd)

6.2 Provision and Description of Switched Access Service

Switched Access Service is provided in two different arrangements. The two arrangements provisioned are Direct Trunked Transport and (T) Tandem Switched Transport. Entrance Facilities may be provisioned (T) for either arrangement. The provision of each Switched Access Service requires Switched Transport facilities and the appropriate End Office functions. There are various optional features available with the Feature Groups and Access Arrangements. The Switched Transport, Common Switching and Transport Termination optional features are available at all Telephone Company end office switches, unless stated otherwise. In addition, a WATS Access Line Service as described in 7.2.3 following may, at the option of the customer, be provided for use with Switched Access Service. WATS Access Line Termination optional features are available in end offices designated as WATS Serving Offices.

There are three specific voice transmission specifications (i.e., Types A, B and C) that have been identified for the provision of Switched Access Service.

Switched Access Service is arranged for either originating, terminating or two-way calling. Originating calling permits the delivery of calls from Telephone Exchange Service locations to the customer's premises. Terminating calling permits the delivery of calls from the customer's premise to Telephone Exchange Service locations. Two-way calling permits the delivery of calls in both directions, but not simultaneously.

Following are detailed descriptions of the available Switched Access Services. Each Switched Access Service is described in terms of its specific physical characteristics and calling patterns, the transmission specifications with which it is provided, the optional features available for use with it and the standard testing capabilities.

(This page filed under Transmittal No. 2059)

6. Switched Access Service (Cont'd)

6.2 Provision and Description of Switched Access Service (Cont'd)

Certain regulations previously found on this page can now be found on Pages 158 and 163.

6. Switched Access Service (Cont'd)

6.2 Provision and Description of Switched Access Service (Cont'd)

6.2.1 Feature Group A (FGA)

(A) Description

FGA, which is available to all customers, provides line-side access to Telephone Company end office switches with an associated seven digit local telephone number for the customer's use in originating and terminating communications to an Interexchange Carrier's Interstate Service or a customer-provided Interstate communications capability. The customer must specify the IXC to which the FGA Service is connected or, in the alternative, specify the means by which the FGA access communication is transported to another state (T) (T)

(1) FGA is provided in connection with Telephone Company electronic and electromechanical end offices. At the option of the customer, FGA is provided on a single or multiple-line-group basis and is arranged for originating calling only, terminating calling only, or two-way calling. (T)

(2) At the first point of switching, FGA provides a line-side termination arranged for either ground-start or loop-start supervisory signaling. The type of signaling is at the option of the customer.

(3) Within the selected LATA, the customer may request the first point of switching at which the line-side termination is to be provided. If Telephone Company facilities or measurement capabilities are not available to accommodate such a request, the Telephone Company will select the first point of switching. (T)

(This page filed under Transmittal No. 2059)

6. Switched Access Service (Cont'd)

6.2 Provision and Description of Switched Access Service (Cont'd) Sx

6.2.1 Feature Group A (FGA) (Cont'd)

(A) Description (Cont'd)

(4) A seven-digit local telephone number assigned by the Telephone Company is provided for access to FGA switching in the originating direction. The seven-digit local telephone number will be associated with the selected end office switch and is of the form NXX-XXXX. If the customer requests a specific seven digit telephone number that is not currently assigned, and the Telephone Company can, with reasonable effort, comply with that request, the requested number will be assigned to the customer. M M

(5) In the terminating direction, FGA switching is arranged with dial-tone start-dial signaling; and may, at the option of the customer, be arranged for dial-pulse or dual-tone multi-frequency address signaling, subject to availability of equipment at the first point of switching. When FGA switching is provided in a hunt group or uniform call distribution arrangement, all FGA switching will be arranged for the same type of address signaling.

Certain regulations on this page formerly appeared on Page 164.
x Reissued material to become effective September 10, 1987.

ACCESS SERVICE

6. Switched Access Service (Cont'd)

6.2 Provision and Description of Switched Access Service (Cont'd)

6.2.1 Feature Group A (FGA) (Cont'd)

(A) Description (Cont'd)

(6) No address signaling is provided by the Telephone Company when FGA Switching is used in the originating direction. Address signaling in such cases, if required by the customer, must be provided by the customer's end user using inband-tone signaling techniques. Such inband-tone address signals will not be regenerated by the Telephone Company and will be subject to the ordinary transmission capabilities of the Switched Transport provided. (T)

(7) When used in the terminating direction, FGA switching may access valid NXXs in the LATA, local operator service (0- and 0+), Directory Assistance , emergency reporting service (911 where available), exchange telephone repair (611 where available), time or weather announcement services of the Telephone Company, community information services of an information service provider, and other customer's services (by dialing the appropriate digits). Charges for FGA terminating calls requiring operator assistance or calls to 611 or 911 will only apply where sufficient call details are available. Additional non-access charges will also be billed for: (1) an operator surcharge, as set forth in the local exchange tariffs, for local operator assistance (0-and 0+) calls; (2) calls to certain community information services, for which rates are applicable under Telephone Company exchange service tariffs, e.g., 976 (DIAL-IT) Network Services and; (3) calls from a FGA line to another customer's service in accordance with that customer's applicable service rates when the Telephone Company performs the billing function for that customer.

(This page filed under Transmittal No. 2059)

6. Switched Access Service (Cont'd)

6.2 Provision and Description of Switched Access Service (Cont'd)

6.2.1 Feature Group A (FGA) (Cont'd)

(A) Description (Cont'd)

(7) (Cont'd)

For FGA calls to Directory Assistance, Switched Access Service usage rates will not apply. Instead, FGA calls to this service are subject to the Directory Assistance Service per call rates as set forth in 9.6 (A) and (B) following. (T)

(8) When a FGA switching arrangement for an individual customer (a single line or entire hunt group) is discontinued at an end office, an intercept announcement is provided. This arrangement provides, for a limited period of time, an announcement that the service associated with the number dialed has been disconnected.

(B) Optional Features

(1) Common Switching Optional Features

(a) Hunt Group Arrangement
(b) Uniform Call Distribution Arrangement
(c) Nonhunting Number for Use with Hunt Group Arrangement or Uniform Call Distribution Arrangement
(d) Call Denial
(e) Service Code Denial
(f) Band Advance Arrangement for Use with WATS Access Line Service
(g) Hunt Group Arrangement for Use with WATS Access Line Service
(h) Uniform Call Distribution Arrangement for Use with WATS Access Line Service
(I) Nonhunting Number for Use with Hunt Group Arrangement or Uniform Call Distribution Arrangement for Use with WATS Access Line Service

(This page filed under Transmittal No. 2059)

6. Switched Access Service (Cont'd)

6.2 Provision and Description of Switched Access Service (Cont'd)

6.2.1 Feature Group A (FGA) (Cont'd)

(B) Optional Features (Cont'd)

(2) Transport Termination Optional Features

(a) Two-way operation with dial-pulse address signaling and loop-start supervisory signaling
(b) Two-way operation with dial-pulse address signaling and ground-start supervisory signaling
(c) Two-way operation with dual-tone multifrequency address signaling and loop-start supervisory signaling
(d) Two-way operation with dual-tone multifrequency address signaling and ground-start supervisory signaling
(e) Terminating operation with dial-pulse address signaling and loop-start supervisory signaling
(f) Terminating operation with dial-pulse address signaling and ground-start supervisory signaling
(g) Terminating operation with dual-tone multifrequency address signaling and loop-start supervisory signaling
(h) Terminating operation with dual-tone multifrequency address signaling and ground-start supervisory signaling
(I) Originating operation with loop-start supervisory signaling
(j) Originating operation with ground-start supervisory signaling

(3) Switched Transport Optional Features Sx

(a) Supervisory Signaling (as set forth in 6.1.3(A)(5)(a) preceding) Sx

(b) Customer-Specified Entry Switch Receive Level

x Issued on not less than 2 days' notice under authority of Special Permission No. 93-992 of the Federal Communications Commission to defer the effective date from December 1, 1993 to December 30, 1993.

ACCESS SERVICE

6. Switched Access Service (Cont'd)

6.2 Provision and Description of Switched Access Service (Cont'd)

6.2.1 Feature Group A (FGA) (Cont'd)

(B) Optional Features (Cont'd)

(4) Certain other features which may be available in connection with FGA are provided under the Telephone Company's local and/or general exchange service tariffs. These include: (T)

(a) Comstar Features
(b) Bill Number Screening
(c) IntraLATA Extensions
(d) Remote Call Forwarding
(e) Information Services Call Blocking

(C)

(D) Testing Capabilities

FGA is provided, in the terminating direction where equipment is available, with seven-digit access to balance (100 type) test line and milliwatt (102 type) test line. In addition to the tests described in 6.1.6 preceding which are included with the installation of service, additional Cooperative Acceptance Testing and Nonscheduled Testing are available for FGA as set forth in 13.3.5 following.

(This page filed under Transmittal No. 2059)

6. Switched Access Service (Cont'd)

6.2 Provision and Description of Switched Access Service (Cont'd)

6.2.2 Feature Group B (FGB)

(A) Description

FGB, which is available to all customers, provides trunk-side access to Telephone Company end office switches with an associated uniform 950-XXXX access code for the customer's use in originating and terminating communications to an IXC's interstate service or a customer-provided interstate communications capability. The customer must specify the IXC to which the FGB Service is connected or, in the alternative, specify the means by which FGB Access communication is transported to another state. (T) (T) (T)

(1) When provided via Telephone Company designated electronic access tandem switches, FGB switching is provided at Telephone Company electronic and electromechanical end office switches. When directly routed to an end office (i.e., provided without the use of an access tandem switch), FGB switching is provided at appropriately equipped Telephone Company electronic end office switches.

(This page filed under Transmittal No. 2059)

6. Switched Access Service (Cont'd)

6.2 Provision and Description of Switched Access Service (Cont'd)

6.2.2 Feature Group B (FGB) (Cont'd)

(A) Description (Cont'd)

(2) FGB is provided as trunk-side switching using either end-office or access-tandem-switch trunk equipment. The switch trunk equipment is provided with wink-start start-pulsing signals and answer and disconnect supervisory signaling.

(3) FGB switching is provided with multifrequency address signaling in both the originating and terminating directions. Except for FGB switching provided with the automatic number identification (ANI) or rotary-dial station signaling arrangements as set forth in 6.3 following, any other address signaling in the originating direction, if required by the customer, must be provided by the customer's end user using inband-tone signaling techniques. Such inband-tone address signals will not be regenerated by the Telephone Company and will be subject to the ordinary transmission capabilities of the Switched Transport provided.

(4) The access code for FGB switching is a uniform access code. The form of the uniform access code is 950-XXXX C
for carriers. These uniform access codes will be the C
assigned access numbers of all FGB Switched Access Service provided to the customer by the Telephone Company.

(5) When used in the terminating direction, FGB switching may access valid NXXs in the LATA, time or weather announcement services of the Telephone Company, community information services of an information service provider and other customer's services (by dialing the appropriate digits). When directly routed to an end office, only those valid NXX codes served by that end office may be accessed. When routed through an access tandem, only those valid NXX codes served by end offices subtending the access tandem may be accessed unless LATA-wide terminating access optional switching is selected.

6. Switched Access Service (Cont'd)

6.2 Provision and Description of Switched Access Service (Cont'd)

6.2.2 Feature Group B (FGB) (Cont'd)

(A) Description (Cont'd)

(5) (Cont'd)

The customer will also be billed additional non-access charges for calls to certain community information services for which rates are applicable under Telephone Company exchange service tariffs, e.g., 976 (DIAL-IT) Network Service. Additionally, non-access charges will also be billed for calls connecting to a non-Telephone Company service in accordance with that customer's applicable service rates when the Telephone Company performs the billing function for that customer. Calls in the terminating direction will not be completed to 950-XXXX access codes, local operator assistance(0- and 0+), Directory Assistance (411), service codes 611 and 911 or 101XXXX access codes. Calls will be completed to Directory Assistance (NPA-555-1212 or 555-1212) when FGB Switching is combined with Directory Assistance Switching. The combination of FGB Switched Access Service with Directory Assistance Service is provided as set forth in Section 9. following. FGB may not be switched, in the terminating direction, to Switched Access Service FGB, (T)
FGC and FGD. (T)

(6) The Telephone Company will establish a trunk group or groups for the customer at end office switches or access tandem switches where FGB switching is provided. When required by technical limitations, a separate trunk group will be established for each type of FGB switching arrangement provided. Different types of FGB or other switching arrangements may be combined in a single trunk group at the option of the Telephone Company.

(7) When all FGB switching arrangements are discontinued at an end office and/or in a LATA, an intercept announcement is provided. This arrangement provides, for a limited period of time, an announcement that the service associated with the number dialed has been disconnected.

(This page filed under Transmittal No. 2059)

6. Switched Access Service (Cont'd)

6.2 Provision and Description of Switched Access Service (Cont'd)

6.2.2 Feature Group B (FGB) (Cont'd)

(A) Description (Cont'd)

(8) Bill Number Screening is provided under the Telephone Company's local and/or general exchange service tariffs.

(B) Optional Features

(1) Common Switching Optional Features

(a) Automatic Number Identification (ANI)
(b) Up-to-7-Digit Outpulsing of Access Digits to customer
(c) Alternate Traffic Routing
(d) Band Advance Arrangement for Use with WATS Access Line Service
(e) Hunt Group Arrangement for Use with WATS Access Line Service
(f) Uniform Call Distribution Arrangement for Use with WATS Access Line Service
(g) Nonhunting Number for Use with Hunt Group Arrangement or Uniform Call Distribution Arrangement for Use with WATS Access Line Service
(h) LATA-wide Terminating Access

(2) Transport Termination Optional Features

(a) Rotary-Dial Station Signaling

(3) Switched Transport Optional Features Sx

(a) Customer-Specification of Switched Transport Termination Sx
(b) Supervisory Signaling (as set forth in 6.1.3(A)(5)(a) preceding) Sx
(c) Customer-Specified Entry Switch Receive Level

(4) WATS Access Line Termination Optional Feature

(a) E & M Supervisory Signaling

x Issued on not less than 2 days' notice under authority of Special Permission No. 93-992 of the Federal Communications Commission to defer the effective date from December 1, 1993 to December 30, 1993.

ACCESS SERVICE

6. Switched Access Service (Cont'd)

6.2 Provision and Description of Switched Access Service (Cont'd) T

6.2.2 Feature Group B (FGB) (Cont'd)

(C) D

D

D

D

Certain regulations previously found on this page can now be found on page 171.

6. Switched Access Service (Cont'd)

6.2 Provision and Description of Switched Access Service (Cont'd)

6.2.2 Feature Group B (FGB) (Cont'd)

(D) Testing Capabilities

FGB is provided, in the terminating direction where equipment is available, with seven-digit access (or ten-digit access if required with LATA-wide terminating access) to balance (100 type) test line, milliwatt (102 type) test line, nonsynchronous or synchronous test line, automatic transmission measuring (105 type) test line, data transmission (107 type) test line, loop-around test line, short-circuit test line and open-circuit test line. In addition to the tests described in 6.1.6 preceding which are included with the installation of service, additional Cooperative Acceptance Testing, Automatic Scheduled Testing, Cooperative Scheduled Testing, Manual Scheduled Testing and Non-Scheduled Testing are available as set forth in 13.3.5 (Testing Services) following. (T)

6.2.3 Feature Group C (FGC)

(A) Description

FGC, which is available only to providers of MTS and WATS, (T)
provides trunk side access to Telephone Company end office switches for the customer's use in originating and terminating communications. This service is available in
all end offices which are not equipped for FGD end office (T)
switching. Existing FGC Access will be converted to (T)
FGD access when it becomes available in an end office. (T)

(1) FGC is provided at all Telephone Company end office switches on a direct trunked basis or via Telephone (T)
Company designated access tandem switches. (T)
FGC switching is provided to the customer (i.e., providers of MTS and WATS) at an end office switch
unless FGD end office switching is provided in the same (T)
office. When FGD switching is available, FGC switching will not be provided.

(This page filed under Transmittal No. 2059)

6. Switched Access Service (Cont'd)

6.2 Provision and Description of Switched Access Service (Cont'd)

6.2.3 Feature Group C (FGC) (Cont'd)

(A) Description (Cont'd)

(2) FGC is provided as trunk-side switching using either end-office or access-tandem-switch trunk equipment arranged for answer and disconnect supervisory signaling. Wink-start start-pulsing signals are provided in all offices where available. In those offices where wink-start start-pulsing signals are not available, delay-dial start-pulsing signals will be provided, unless immediate-dial-pulse signaling is provided, in which case no start-pulsing signals are provided.

(3) FGC is provided with multifrequency address signaling except in certain electromechanical end office switches where multifrequency signaling is not available. In such switches, the address signaling will be dial-pulse, revertive-pulse, immediate-dial-pulse or panel-call-indicator signaling, whichever is available. Up to 12 digits of the called party number dialed by the customer's end user using dual-tone multifrequency or dial-pulse address signals will be provided by Telephone Company equipment to the customer's premises where the Switched Access Service terminates. Such called party number signals will be subject to the ordinary transmission capabilities of the Switched Transport provided. Sx

x Issued on not less than 2 days' notice under authority of Special Permission No. 93-992 of the Federal Communications Commission to defer the effective date from December 1, 1993 to December 30, 1993.

6. Switched Access Service (Cont'd)

6.2 Provision and Description of Switched Access Service (Cont'd) Sx

6.2.3 Feature Group C (FGC) (Cont'd)

(A) Description (Cont'd)

(4) No access code is required for FGC switching. The telephone number dialed by the customer's end user shall be a seven or ten-digit number for calls in the North American Numbering Plan (NANP). For international calls outside the NANP, a seven-to-twelve-digit number may be dialed. The form of the numbers dialed by the customer's end user is NXX-XXXX, 0 or 1 + NXX-XXXX, NPA + NXX-XXXX, 0 or 1 + NPA + NXX-XXXX, and, when the end office is equipped for International Direct Distance Dialing (IDDD), 01 + CC + NN or 011 + CC + NN.

(5) When used in the terminating direction, FGC switching may access valid NXXs in the LATA, time or weather announcement services of the Telephone Company, community information services of an information provider, and other customer's services (by dialing the appropriate codes) when the services can be reached using valid NXX codes. When directly routed to an end office, only those valid NXX codes served by

Certain regulations previously found on this page can now be found on page 172.1.
x Reissued material to become effective September 10, 1987.

6. Switched Access Service (Cont'd)

6.2 Provision and Description of Switched Access Service (Cont'd)

6.2.3 Feature Group C (FGC) (Cont'd)

(A) Description (Cont'd)

(5) (Cont'd)

that office may be accessed. When routed through an access tandem, only those valid NXX codes served by offices subtending the access tandem may be accessed. Where measurement capabilities exist, the customer will also be billed additional non-access charges for calls to certain community information services, for which rates are applicable under Telephone Company exchange service tariffs, e.g., 976 (DIAL-IT) Network Services. Additionally, non-access charges will also be billed for calls connecting to a non-Telephone Company service in accordance with the customer's billable service rates when the Telephone Company performs the billing function for that customer. Calls in the terminating (T) direction will not be completed to 950-0XXX or 950-1XXX access codes, local operator assistance (0-and 0+), Directory Assistance (411), service codes (611 and 911) and 101XXXX access codes. Calls will be completed to Directory Assistance (NPA 555-1212 or 555-1212) when FGC switching is combined with Directory Assistance switching. The combination of FGC Switched Access Service with Directory Assistance Service is provided as set forth in 9. following. FGC may not be switched, in the terminating direction, to Switched Access Service FGB, FGC or FGD. (T)

(6) The Telephone Company will establish a trunk group or groups for the customer at end office switches or access tandem switches where FGC switching is provided. When required by technical limitations, a separate trunk group will be established for each type of FGC switching arrangement provided. Different types of FGC or other switching arrangements may be combined in a single trunk group at the option of the Telephone Company.

(This page filed under Transmittal No. 2059)

6. Switched Access Service (Cont'd)

6.2 Provision and Description of Switched Access Service (Cont'd) Sx

6.2.3 Feature Group C (FGC) (Cont'd)

(A) Description (Cont'd)

x Issued under authority of Special Permission No. 87-420 of the Federal Communications Commission to defer the effective date from July 27, 1987 to September 10, 1987.

6. Switched Access Service (Cont'd)

6.2 Provision and Description of Switched Access Service (Cont'd) Sx

6.2.3 Feature Group C (FGC) (Cont'd)

(B) Optional Features

(1) Common Switching Optional Features

(a) Automatic Number Identification (ANI)
(b) Service Class Routing
(c) Dial-Pulse Address Signaling
(d) Revertive-Pulse Address Signaling
(e) Delay Dial Start-Pulsing Signaling
(f) Immediate-Dial-Pulse Address Signaling
(g) Panel-Call-Indicator Address Signaling
(h) Alternate Traffic Routing
(I) Trunk Access Limitation
(j) End Office End User Line Service Screening for Use with WATS Access Line Service
(k) Hunt Group Arrangement for Use with WATS Access Line Service
(l) Uniform Call Distribution Arrangement for Use with WATS Access Line Service
(m) Nonhunting Number for Use with Hunt Group Arrangement or Uniform Call Distribution Arrangement for WATS Access Line Service
(n) Band Advance Arrangement for Use with WATS Access Line Service

x Issued under authority of Special Permission No. 87-420 of the Federal Communications Commission to defer the effective date from July 27, 1987 to September 10, 1987.

6. Switched Access Service (Cont'd)

6.2 Provision and Description of Switched Access Service (Cont'd)

6.2.3 Feature Group C (FGC) (Cont'd)

(B) Optional Features (Cont'd)

(2) Transport Termination Optional Features

(a) Operator Trunks - Modified Operator Services (MOS) Direct - i.e., Coin, Non-Coin and Combined Coin and Non-Coin. (Non-Coin Trunks are provided at Telephone Company electronic and electromechanical end offices. Coin and Combined Coin and Non-Coin are provided only at Telephone Company electronic end offices and other Telephone Company end offices where equipment is available.)

(3) Switched Transport Optional Features Sx

(a) Supervisory Signaling (as set forth in 6.1.3(A)(5)(a) preceding) Sx

(4) WATS Access Line Termination Optional Features

(a) E&M Supervisory Signaling
(b) Dialed Number Identification Service

x Issued on not less than 2 days' notice under authority of Special Permission No. 93-992 of the Federal Communications Commission to defer the effective date from December 1, 1993 to December 30, 1993.

6. Switched Access Service (Cont'd)

6.2 Provision and Description of Switched Access Service (Cont'd) Sx

6.2.3 Feature Group C (FGC) (Cont'd)

(C) D

D

x Reissued material to become effective September 10, 1987.

6. Switched Access Service (Cont'd)

6.2 Provision and Description of Switched Access Service (Cont'd)

6.2.3 Feature Group C (FGC) (Cont'd)

(D) Testing Capabilities

FGC is provided, in the terminating direction where equipment is available, with seven-digit access to balance (100 type) test line, milliwatt (102 type) test line, nonsynchronous or synchronous test line, automatic transmission measuring (105 type) test line, data transmission (107 type) test line, loop-around test line, short-circuit test line and open-circuit test line. In addition to the tests described in 6.1.6 preceding which are included with the installation of service, additional Cooperative Acceptance Testing, Automatic Scheduled Testing, Cooperative Scheduled Testing or Manual Scheduled Testing, and Non-Scheduled Testing are available as set forth in 13.3.5 (Testing Services) following for FGC. (T)

6.2.4 Feature Group D (FGD)

(A) Description

FGD Access which is available to all customers, provides trunk side access to Telephone Company end office switches with an associated 101XXXX access code for the customer's use in originating and terminating communications. For FGD with the CCSAC option, out of band signaling is provided through Telephone Company designated STPs. (T)

(1) electronic end office switches whether routed directly or via Telephone Company designated electronic access tandem switches. (T)

(2) FGD is provided as trunk-side switching through the use of end office or access tandem switch trunk equipment. (T) The switch trunk equipment is provided with wink-start start-pulsing signals and answer and disconnect supervisory signaling, or without signaling when the CCSAC optional feature is specified

(This page filed under Transmittal No. 2059)

6. Switched Access Service

6.2 Provision and Description of Switched Access Service (Cont'd)

6.2.4 Feature Group D (FGD) (Cont'd)

(A) Description (Cont'd) Sx

(3) FGD switching is provided with multifrequency address or SS7 signaling. Up to 12 digits of the called party number dialed by the customer's end user using dual-tone multifrequency or dial-pulse address signals will be provided by Telephone Company equipment to the customer's premises where the Switched Access Service terminates. Such address signals will be subject to the ordinary transmission capabilities of the Switched Transport provided. Sx

(4) When used in the terminating direction, FGD switching may access valid NXXs in the LATA, time or weather announcement services of the Telephone Company, community information services of an information service provider, and other customer's services (by dialing the appropriate codes) when such services can be reached using valid NXX codes. When directly routed to an end office, only those valid NXX codes served by that office may be accessed. When routed through an access tandem, only those valid NXX codes served by end offices subtending the access tandem may be accessed. The customer will also be billed additional non-access charges for calls to certain community information services, for which rates are applicable under Telephone Company exchange service tariffs, e.g., 976 (DIAL-IT) Network Service. Additionally, non-access charges will also be billed for calls connecting to a non-Telephone Company service in accordance with that customer's applicable service rates

x Issued on not less than 2 days' notice under authority of Special Permission No. 93-992 of the Federal Communications Commission to defer the effective date from December 1, 1993 to December 30, 1993.

6. Switched Access Service (Cont'd)

6.2 Provision and Description of Switched Access Service (Cont'd)

6.2.4 Feature Group D (FGD) (Cont'd)

(A) Description (Cont'd)

(4) (Cont'd)

when the Telephone Company performs the billing function for that customer. Calls in the terminating direction will not be completed to 950-XXXX access codes, local operator assistance (0-and 0+), Directory Assistance (411 and 555-1212), service codes (611 and 911) and 101XXXX access codes. Calls will be completed to Directory Assistance (NPA-555-1212 or 555-1212) when FGD switching is combined with Directory Assistance switching. The combination of FGD Switched Access Service with Directory Assistance Service is provided as set forth in 9. following. FGD may not be switched, in the terminating direction, to Switched Access Service FGB, FGC or FGD. (T)

(5) The Telephone Company will establish a trunk group or groups for the customer at end office switches or access tandem switches where FGD switching is provided. When required by technical limitations, a separate trunk group will be established for each type of FGD switching arrangement provided. Different types of FGD or other switching arrangements may be combined in a single trunk group at the option of the Telephone Company.

(6) The access code for FGD switching is a uniform access code of the form 101XXXX. These uniform access codes will be the assigned access numbers of all FGD access provided to the customer by the Telephone Company. No access code is required for calls to a customer over FGD Switched Access Service if the end user's telephone exchange service is arranged for presubscription to that customer, as set forth in 13.3.3 (Presubscription and Preselection) following. (T)

(This page filed under Transmittal No. 2059)

6. Switched Access Service (Cont'd)

6.2 Provision and Description of Switched Access Service (Cont'd)

6.2.4 Feature Group D (FGD) (Cont'd)

(A) Description (Cont'd)

(6) (Cont'd)

Where no access code is required, the number dialed by the customer's end user shall be a seven or ten-digit number for calls in the NANP. For international calls (T) outside the NANP, a seven to twelve-digit number may be dialed. The form of the numbers dialed by the customer's end user is NXX-XXXX, 0 or 1+ NXX-XXXX, NPA + NXX-XXXX, 0 or 1+ NPA + NXX-XXXX, and, when the end office is equipped for IDDD, 01+ CC + NN or 011+ (T) CC + NN.

When the 101XXXX access code is used, FGD switching also provides for dialing the digit 0 for access to the customer's operator, 911 for access to the Telephone Company's emergency reporting service, or at the customer's option, the end-of-dialing digit (#) for cut-through access to the customer's premises.

(7) FGD switching will be arranged to accept calls from telephone exchange service locations without the need for dialing 101XXXX uniform access code. Each telephone exchange service line may be marked with a presubscription code to identify which 101XXXX code its calls will be directed to for interLATA service. Presubscription codes are applied as set forth in 13.3.3 (Presubscription and Preselection) following. (T)

(8) When the 101XXXX 1+ or 011+ sent-paid access code is dialed from a Telephone Company pay telephone to a customer that has not ordered per 6.3.2(B) or (C) following, the calls will be routed to a Telephone Company recording.

(This page is filed under Transmittal No. 2059)

66. Switched Access Service (Cont'd)

6.2 Provision and Description of Switched Access Service (Cont'd)

6.2.4 Feature Group D (FGD) (Cont'd)

(A) Description (Cont'd)

(9) When a customer has had FGB access in an end office and subsequently replaces the FGB access with FGD access, at the mutual agreement of the customer and the Telephone Company, the Telephone Company will direct calls dialed by the customer's end users using the customer's previous FGB access code to the customer's FGD access service, as long as the FGB 0/1XXX access code is the same as the four (4) digit FGD 0/1XXX and only in the 0/1 bank of numbers. (C)

When a customer has both FGB and FGD access in the same end office or separate end offices which subtend the same access tandem and chooses to route his originating FGB calls over FGD access, the Telephone Company will direct calls dialed by the customer's end users using the customer's FGB access code to the customer's FGD access service, as long as the FGB 0/1XXX access code is the same as the four (4) digit FGD 0/1XXX and only in the 0/1 bank of numbers. Such calls, whether originating from an equal access or non-equal access end office, will be rated as FGD. (C)

The customer must be prepared to handle normally dialed FGD calls, as well as, calls dialed with the FGB access code which requires the customer to receive additional address signaling from the end user. Such calls will be rated as FGD.

(10) When Public Switched Digital Service (PSDS) Access is provided with FGD, the dialing pattern will be modified as follows. In the originating direction, end users at suitably equipped end user premises can activate the capability in the end office by dialing the #56 + 101XXXX + 7 or 10 digits or #56 + 1 + 7 or 10 digits when presubscribed to a participating interexchange carrier. (C)

(This page filed under Transmittal No. 1999)

6. Switched Access Service (Cont'd)

6.2 Provision and Description of Switched Access Service (Cont'd)

6.2.4 Feature Group D (FGD) (Cont'd)

(A) Description (Cont'd)

(11) At the option of the customer, Operator Transfer Service as described in 6.1.3(A)(6)(a) preceding, is available for use with FGD. Operator Transfer Service is ordered as set forth in 5.2 preceding and is provided to the customer via FGD trunks. (T)

(12) FGD access is available to accept 950 calls with multifrequency or CCSAC signaling. With CCSAC signaling, the customer may also order Charged Number (CN) as an additional Common Switching Optional Feature.

(13) At the option of the customer, the Tandem Signaling optional feature as described in Section 6.1.3(A)(5)(f) preceding, is available for use on one-way originating FGD trunks provisioned from equal access end offices to a customer's point of termination. (T)

(This page filed under Transmittal No. 2059)

6. Switched Access Service (Cont'd)

6.2 Provision and Description of Switched Access Service (Cont'd)

6.2.4 Feature Group D (FGD) (Cont'd)

(B) Optional Features

(1) Common Switching Optional Features

(a) Automatic Number Identification (ANI)
(b) Service Class Routing
(c) Alternate Traffic Routing
(d) Call Gapping Arrangement
(e) Trunk Access Limitation
(f) International Carrier Option
(g) End Office End User Line Service Screening for Use with WATS Access Line Service
(h) Hunt Group Arrangement for Use with WATS Access Line Service
(I) Hunt Group Arrangement for Use with PVN Access Line Service
(j) Uniform Call Distribution Arrangement for Use with WATS Access Line Service
(k) Nonhunting Number for Use with Hunt Group Arrangement or Uniform Call Distribution Arrangement for WATS Access Line Service
(l) Band Advance Arrangement for Use with WATS Access Line Service
(m) Cut-through
(n) Public Switched Digital Service (PSDS) Access
(o) Calling Party Number (CPN)
(p) Charge Number (CN)
(q) Carrier Selection Parameter (CSP)
(r) Access Transport Parameter (ATP) N

6. Switched Access Service (Cont'd)

6.2 Provision and Description of Switched Access Service (Cont'd)

6.2.4 Feature Group D (FGD) (Cont'd)

(B) Optional Features (Cont'd)

(2) Transport Termination Optional Features

(a) Operator Trunks - Modified Operator Services (MOS) Direct - i.e., Coin and Combined Coin and Non-Coin.

(b) Operator Trunks - Exchange Access Operator Services System (EAOSS) - i.e., Coin 1+ and 011+ sent-paid as well as 0+, 00- and 01+ where technically feasible.

(3) Switched Transport Optional Features

(a) Supervisory Signaling (as set forth in 6.1.3(A)(5)(a) preceding).

(b) Common Channel Signaling Access Capability (CCSAC)set forth in 6.1.3(A)(5)(d) preceding).

(c) Operator Transfer Service (as set forth in 6.1.3(A)(6)(a) preceding).

(d) 64 Clear Channel Capability (CCC) (as set forth in 6.1.3(A)(5)(e) preceding).

(e) Carrier Identification Parameter (CIP) (as set forth in 6.1.3(A)(6)(c) preceding). N N

(4) WATS Access Line Termination Optional Features

(a) E&M Supervisory Signaling

(b) Dialed Number Identification Service

6. Switched Access Service (Cont'd)

6.2 Provision and Description of Switched Access Service (Cont'd)

6.2.4 Feature Group D (FGD) (Cont'd)

(B) Optional Features (Cont'd) Sx

(5) Tandem Signaling Optional Feature

(a) CIC and OZZ (as set forth in 6.1.3(A)(5)(f).

(b) TNS (as set forth in 6.1.3(A)(5)(f). Sx

x Issued under authority of Special Permission No. 94-1307 to further defer the effective date from December 1, 1994 to January 24, 1995.

6. Switched Access Service (Cont'd)

6.2 Provision and Description of Switched Access Service (Cont'd)

6.2.4 Feature Group D (FGD) (Cont'd)

(T)

(C) Testing Capabilities (T)

FGD is provided, in the terminating direction where equipment is available, with seven-digit access to balance (100 type) test line, milliwatt (102 type) test line, nonsynchronous or synchronous test line, automatic transmission measuring (105 type) test line, data transmission (107 type) test line, loop-around test line, short-circuit test line and open-circuit test line. In addition to the tests described in 6.1.6 preceding which are included with the installation of service, additional Cooperative Acceptance Testing, Automatic Scheduled Testing, Cooperative Scheduled Testing, Manual Scheduled Testing, and Non-Scheduled Testing, are available for FGD as set forth in 13.3.5 (Testing Services) following. (T)

(This page filed under Transmittal No. 2059)

6. Switched Access Service (Cont'd)

6.2 Provision and Description of Switched Access Service (Cont'd)

6.2.5 Line Information Data Base (LIDB) Service

(A) General Description

LIDB Service is provided by the Telephone Company to its customers in support of alternate billing services. There are two different LIDB Services offered: LIDB N
Billing Validation and Originating Line Number Screening |
Service and Equipment Indicator Service (OLNS Service). N
LIDB Service provides access to billing validation data which resides in the Telephone Company data base for use with alternate billing services, such as Calling Card, Collect Calls and Third Number Billing. OLNS C
Service provides information on the type of service/ N
equipment associated with the line originating the call. N

Customers participating in LIDB Service for purposes of obtaining LIDB Billing Validation or OLNS Service data C
originate queries to the LIDB from an Operator Service System (OSS) identified by an originating point code. The requested billing validation data, in the form of signaling information, is passed back from the Service Control Point (SCP) where the LIDB resides via the Telephone Company STP to the customer's designated OSS where the LIDB query originated. The LIDB system will T
receive and respond to American National Standards Institute Signaling System 7 protocol queries as defined in Bellcore publication TR-TSV-000905, and Pacific Bell publication PUB L-780023 PB/NB.

LIDB Billing Validation Service will provide the C
following functions on a per query basis:

- Validation of a telecommunication calling card stored in LIDB.
- Determination of whether the billed line automatically rejects certain calls billed as collect or third number.
- Determination of whether the billed line is a public telephone number using the "Service or Equipment Indicator" in the LIDB.

6. Switched Access Service (Cont'd)

6.2 Provision and Description of Switched Access Service (Cont'd)

6.2.5 Line Information Data Base (LIDB) Service (Cont'd)

(A) General Description (Cont'd)

D

D

Both aggregator and non-aggregator customers may purchase these functions separately (unbundled).

- An aggregator is defined as any person that, in the ordinary course of its operations, makes telephones available to the public or to transient users of its premises, for interstate telephone calls using a provider of operator services.

- A non-aggregator is any other business customer.

OLNS Service provides customers with access to the Telephone Company's LIDB to facilitate the completion of originating calls from working telephone numbers. In response to a properly formatted OLNS query, the Telephone Company will provide the service and equipment values associated with the originating line. N N

The Telephone Company will provide customer interconnection to its STP through the establishment of an SS7 Signaling Connection between the Customer's Signaling Point of Interface (SPOI) and the STP, as set forth in 6.1.3(A)(4) preceding.

6. Switched Access Service (Cont'd) N

6.2 Provision and Description of Switched Access Service (Cont'd)

6.2.5 Line Information Data Base (LIDB) Service (Cont'd)

(A) General Description (Cont'd)

OLNS (Originating Line Number Screening) Service provides customers access to the Telephone Company's LIDB to facilitate the completion of originating calls from working telephone numbers. In response to a properly formatted OLNS query, the Telephone Company will provide originating line screening information that will identify allowable originating call processing and originating billing decisions.

OLNS Service will be provided, where technically feasible, on September 15, 1997, or nine months after receipt by the Telephone Company of a bona fide customer order, whichever is later. N

6. Switched Access Service (Cont'd)

6.2 Provision and Description of Switched Access Service (Cont'd)

6.2.5 Line Information Data Base (LIDB) Service (Cont'd)

(B) Undertaking of the Telephone Company

The Telephone Company will provide to the customer, upon initiation of service, or upon demand thereafter by the customer, confirmation of the billing restrictions as applied to the customer's lines. N N

LIDB Service will be provided on an interrogation basis, as set forth in 6.2.5(A) preceding. LIDB Service is provided on a call-by-call basis and data accessed may not be stored elsewhere for future use.

Any end user line information of the Telephone Company that is furnished, made available to, or otherwise disclosed to the customer shall remain the sole property of the Telephone Company and not reproduced for other purposes.

LIDB Service is provided subject to technical capability and successful completion of application testing.

The Telephone Company's LIDB is updated seven days a week, 24 hours per day. High priority updates, which include the disablement of a number due to fraudulent use, are completed in real time via terminal input to the LIDB Administrative System. Direct access to LIDB is also available as a backup. Normal day to day updates required to add and delete numbers, are batch processed through to LIDB at the end of each day. LIDB data accuracy is ensured by regular audits against various corporate support systems.

6. Switched Access Service (Cont'd)

6.2 Provision and Description of Switched Access Service (Cont'd)

6.2.5 Line Information Data Base (LIDB) Service (Cont'd)

(B) Undertaking of the Telephone Company (Cont'd)

The Telephone Company monitors LIDB Billing Validation T
Service seven days a week, 24 hours per day, for potential T
fraud. Fraud detection is based on thresholding routines
contained within the LIDB, and pattern analysis based on
information as set forth in 6.2.5(C) following. Potential
fraud detected within the LIDB application is reported to,
and then aggregated by, an adjunct processor. This
processor retains historical fraud patterns and a record
of previous investigations. If fraud is suspected,
customer contact will be attempted. If a high probability
of fraud exists, the Telephone Company will disable a
number for alternate billing purposes, and follow up with
the customer.

Should unexpected high levels of attempts for LIDB Service T
occur, creating an overload in the Service Control Point T
(SCP), Automatic Code Gapping (AGC) will be implemented by
the SCP to reduce the rate at which LIDB Service messages T
are processed by the SCP. AGC is applied across all
attempts originating from all Networks. As LIDB Service T
query messages reach the SCP, a slow down process will be
invoked until the congestion period has passed. During
periods of extremely high service demands, incoming T
query messages may be discarded. When AGC is applied, a
SCP to query originator message is sent to indicate that
an overload condition exists.

6. Switched Access Service (Cont'd)

6.2 Provision and Description of Switched Access Service (Cont'd)

6.2.5 Line Information Data Base (LIDB) Service (Cont'd)

(C) Obligation of the Customer

The customer shall provide a LIDB Service Percent Interstate Usage (PIU) Report in accordance with Section 2.3.14(A)(6) preceding.

- The customer will use the LIDB Services provided here under only for the purposes as described in 6.2.5(A) preceding. T T

- If in the Telephone Company's reasonable opinion the LIDB Service information is used by a customer contrary to the terms and conditions as described in 6.2.5(B) and (C), the Telephone Company will discontinue LIDB Service to that customer. C

If the customer to LIDB Service is to offer LIDB Billing Validation Service or OLNS Service to other parties, they must provide the identity of the secondary LIDB accessor ten (10) days prior to accessing LIDB. C | C

If service is to be changed or disconnected, sixty (60) days' written notice to the Telephone Company is required.

All direct or secondary LIDB accessors must provide both the actual calling number and the actual called number associated with the ABS call in progress for which billing number validation is being performed. This information will be safeguarded by the Telephone Company and used in the identification and analysis of potential alternate billing fraud.

6. Switched Access Service (Cont'd)

6.2 Provision and Description of Switched Access Service (Cont'd)

6.2.5 Line Information Data Base (LIDB) Service (Cont'd)

(D) Rate Regulations

(1) Description of Rates and Charges

There are two types of rates and charges that will apply to both LIDB Services. These are usage rates and nonrecurring charges. These rates and charges are applied as set forth in 6.2.5(D)(1)(a) and (b) following. T

(a) Usage Rates

The usage rates for LIDB Service are applicable on a per query basis as described in Section 6.2.5 (D)(2) following and set forth in 6.8.9 following. T C N

(b) Nonrecurring Charges

Nonrecurring charges apply for each request for establishment of an originating point code for LIDB Service. The nonrecurring charges for the establishment of LIDB Service are set forth in Section 6.8.9 following. T

(2) Application of Rates and Charges

Rates and charges for LIDB Service are applied as follows:

(a) LIDB Transport Charge

A usage rate applies to each LIDB Billing Validation query and OLNS query received at the Telephone Company Service Control Point (SCP). Charges are accumulated over a bill round and are billed to the customer on a bill round basis. C | C

6. Switched Access Service (Cont'd)

6.2 Provision and Description of Switched Access Service (Cont'd)

6.2.5 Line Information Data Base (LIDB) Service (Cont'd)

(D) Rate Regulations (Cont'd)

(2) Application of Rates and Charges (Cont'd)

(b) LIDB Query Charge

A separate usage rate applies to each LIDB Billing Validation query and OLNS query received at the Telephone Company SCP. Charges are accumulated and billed to the customer on a bill round basis. (Dy)
(Dy)
(Dy)

(c) LIDB Service Establishment Charge

A nonrecurring charge to be applied per originating point code, applies for the establishment of LIDB Service as specified in Section 6.2.5(D)(1) preceding.

x Reissued material originally filed under Transmittal No. 2105, is scheduled to become effective April 11, 2000.

y Issued under authority of Special Permission No. 00-022 of the F.C.C.

(This page filed under Transmittal No. 2108)

6. Switched Access Service (Cont'd)

6.2 Provision and Description of Switched Access Service (Cont'd)

6.2.5

6.2.6 900 Access Service Sx

900 Access Service is an originating offering utilizing trunk side Switched Access Service. The service provides a customer identification function based on the dialed 900 number at Telephone Company appropriately equipped end offices or tandem switches. Sx Sx

When a 1+900+NXX-XXXX call is originated by an end user, the Telephone Company will perform the customer identification function based on the dialed digits to determine the customer location to which the call is to be routed. If the call originates from an end office switch not equipped to provide the customer identification function, the call will be routed to an office at which the function is available. Once customer identification has been established, the call will be routed to the customer. Calls originating in an end office switch in which the customer has not ordered 900 Access Service will be routed to intercept. 900 calls from COIN, 0+, 0-, 10XXX, inmate service, and hotel motel will be blocked. The customer may request unblocking of 0+ 900 calling except on inmate or other classes of service which do not allow 900 calling. Sx Sx

x Issued on not less than 1 day's notice to advance the effective date from May 1, 1993 to April 30, 1993, and suspend for one day to May 1, 1993, under authority of Special Permission No. 93-349 of the Federal Communications Commission.

6. Switched Access Service (Cont'd)

6.2 Provision and Description of Switched Access Service (Cont'd)

6.2.6 900 Access Service (Cont'd)

When 900 Access Service is provided from an end office equipped with equal access capabilities, all such service will be provisioned in accordance with the technical characteristics available with FGD and ATA-101XXXX except when more than one tandem is employed in the transport of a 900 Access Service call. When 900 Access service is provided from an end office not equipped with equal access capabilities, such service will be provisioned in accordance with the technical characteristics of FGC or FGD, except when more than one tandem is employed in the transport of a 900 Access Service call. (T) (T)

When more than one tandem is employed in the transport of a 900 Access Service call, transmission quality cannot be guaranteed.

900 Access Service originating from equal access end offices with the customer identification function will be provided using exchange access signaling with overlap outpulsing and ten-digit ANI, or with SS7 out of band signaling when the customer has ordered the CCSAC optional feature with FGD. 900 Access Service originating from equal access end offices without the customer identification function, or from end offices not having equal access capability, will be provided using conventional signaling. On traffic using conventional signaling, other than FGC, the customer's facilities shall provide off-hook supervision upon receipt of the transmitted digits or answer supervision when the called party answers.

900 Access Service usage measurement shall be in accordance with the regulations set forth in 6.7.8 following for FGC and FGD and ATA-101XXXX. (T)

The customer's 900 Access Service may be combined in the same trunk group arrangement with the customer's non-900 Access Service traffic or, at the request of the customer, a separate trunk group will be established for 900 Access Service.

900 Access Service will be available in every LATA.

(This page filed under Transmittal No. 2059)

6. Switched Access Service (Cont'd)

6.2 Provision and Description of Switched Access Service (Cont'd)

6.2.6 900 Access Service (Cont'd) Sx

The Telephone Company will work cooperatively with the customer to implement any network management controls (e.g. call gapping and code blocking) to protect the network from traffic surges due to peaked 900 Access Services. Customer notification of peaked services is required as set forth in 6.6.1(D).

x Issued on not less than 1 day's notice to advance the effective date from May 1, 1993 to April 30, 1993, and suspend for one day to May 1, 1993, under authority of Special Permission No. 93-349 of the Federal Communications Commission.

6. Switched Access Service (Cont'd)

6.2 Provision and Description of Switched Access Service (Cont'd)

6.2.7 X.25 C

(A) Description

X.25 provides transport and routing of packets of digital information by concentrating them on digital transmission facilities at transmission speeds of less than or equal to 56 kilobits per second (Kbps). A packet is a continuous sequence of binary digits of information which is switched through the network as an integral unit. A packet consists of up to 512 characters of end user data plus control and error information. These characters are groups of eight binary digits and are also called octets. C C

The network interface provided under this tariff uses X.75 protocol, as outlined by the Consultative Committee on International Telegraphy and Telephony, a United Nations communications standards body. Access to the X.25 network may be by subscriber connections or dedicated digital facilities, as described in 6.2.7 (B). Connection and usage charges will apply and are listed in 6.8.1 Parameter options, such as packet size, throughput class negotiation, etc., are service design characteristics that are set at the initial service establishment in negotiations with the customer. C

The Telephone Company will not transport packets across a LATA boundary. X.25 will be furnished only in LATAs where central offices are equipped to provide this service. Service may be unavailable or disrupted for network maintenance routines between the hours of 2 a.m. and 5 a.m. each Thursday. C

6. Switched Access Service (Cont'd)

6.2 Provision and Description of Switched Access Service

6.2.7 X.25 (Cont'd) C

(B) Connection to X.25 C

(1) Dedicated X.75 Internetwork Interface

A Dedicated X.75 Internetwork Interface is required for all customers providing internetwork data transport. It provides the capability of connecting a customer's Signaling Terminal Equipment (STE) to the X.25 switching network via a dedicated digital C facility at transmission speeds of 9.6 or 56 Kbps synchronous, allowing both send and receive capability.

The STE is equipment used for internetwork packet transport to exchange packets with another packet switch through a X.75 Internetwork Interface that must meet packet network protocol interface specifications. One logical channel is included with the basic service. A logical channel is a communications channel that allows two-way simultaneous transmission of data packets through the network. No circuit capability is preassigned to a logical channel; capacity is made available as data is transmitted. Each virtual circuit utilizes only one logical channel.

The required digital facilities to the dedicated X.75 Internetwork Interface are described in Section 7.

(2) Subscriber Connections

Subscriber connections allow end users to enter the Telephone Company's X.25 network. These connections C may be made by any of the following methods:

- public dial connections
- private dial connections
- dedicated analog interfaces
- dedicated digital interfaces

6. Switched Access Service (Cont'd)

6.2 Provision and Description of Switched Access Service

6.2.7 X.25 (Cont'd) C

(B) Connection to X.25 (Cont'd) C

(2) Subscriber Connections (Cont'd)

The subscriber initiating the call will pay all exchange-related charges. All appropriate charges listed in 6.8.1 will be billed to the X.75 customer.

(C) Optional Features

Only the following optional features are available with X.75 Internetwork Interfaces.

(1) Fast Select-Initiate is a feature which allows limited amounts of data during the call set-up phase to be sent to and received from a Data Network Address (DNA) conditioned for fast select acceptance. A DNA is a numeric character string used to identify the customer's interface within the network. Each successful fast select initiated call incurs charges for a call set-up and a minimum of two segments of data.

(2) Fast Select Acceptance is a feature which allows for the acceptance of data sent via a fast select initiate type call.

(3) Hunt Group-Internal, which occurs internally within the X.25 network, allows for a grouping of up to 30 secondary DNAs with a ten digit pilot DNA. Hunting allows the next available DNA to be seized on a call. C

(4) Preselection for Data Services is a feature which allows carrier preselection data to be passed as part of the addressing and routing information within the packet.

(5) Reverse Charge Acceptance-Packet is a feature which allows packet calls and associated billing to be accepted or rejected by the terminating port.

6. Switched Access Service (Cont'd)

6.2 Provision and Description of Switched Access Service

6.2.7 X.25 (Cont'd) C

(C) Optional Features (Cont'd)

(6) Closed User Groups (CUG) allow a customer to establish exclusive user groups, which are private networks within the X.25 network. Each participant's call C originating or call terminating capabilities can be individually defined. Each data network address may be included in up to ten separate CUGs. Sub-options include:

a) Basic, required for each separate CUG in which DNA is a member
b) incoming and outgoing calls limited to a customer's CUG
c) Incoming calls allowed from the open X.25 C network
d) Outgoing calls allowed to the open X.25 network C
e) Incoming calls allowed within the CUG
f) Outgoing calls allowed within the CUG

(7) Data Terminating Equipment (DTE) Back-up allows for the automatic rerouting of a call to an alternate, predetermined DNA. DTE are devices (such as a computer or teleprinter), generally belonging to the end user, that provide the functional and electrical interface to the communications medium.

The DTE is connected to Data Circuit Equipment (DCE), which are devices and connections placed at the interface to a network by the network provider.

(8) Additional logical channels

(a) A maximum of 4095 logical channels may be ordered per X.75 Internetwork Interface. However, a practical limit of logical channels assigned to a single interface should be determined or a significant degradation of service may occur.

6. Switched Access Service (Cont'd)

6.2 Provision and Description of Switched Access Service

6.2.7 X.25 (Cont'd) C

(C) Optional Features (Cont'd)

(9) A Permanent Virtual Circuit (PVC) is a feature which is established between two logical channels and remains in the data transfer phase. No set up or clearing procedures are required to send data across this circuit. Calls generated at the logical channel at one end of the Permanent Virtual Circuit can only be transported to the logical channel located at the T
opposite end. No calls from the Permanent Virtual T
Circuit can access the open X.25 network. PVCs are C
maintained only within the LATA. T

(D) Measurement and Billing Information

(1) Usage charges listed in 6.8.1 include both peak and T
non-peak period rates. Peak period rates are
defined as applicable from 8:00 a.m. up to but not T
including 5 p.m. Monday through Friday, except T
Holidays as defined in Section 2.6.

(2) Recurring and usage rate charges are billed on a monthly basis and do not include detailed billing. Usage rate charges consist of call set-up and segment rate elements. For the monthly sum of each usage rate T
element charge, any fraction of a cent will be rounded up to the next whole cent.

(3) The call set-up process occurs at the beginning of each X.25 call attempt. It allows a connection C
between the originating and terminating interface. A usage rate charge of one set-up per call is billed to the interface which is collecting the charges.

(4) A segment is the basic billing unit for X.25 data C
transport. One segment will be billed for every 128 octets, or portion thereof, of user data that is transmitted.

6. Switched Access Service (Cont'd)

6.2 Provision and Description of Switched Access Service

6.2.7 X.25 (Cont'd) C

(D) Measurement and Billing Information (Cont'd)

(5) Fractions of minutes per call are rounded up to the nearest whole minute.

(6) Charges accrued for portions of calls that span multiple billing periods will be applied in the appropriate billing period.

(7) The time system, standard or daylight savings, legally in use in California will determine whether peak or off-peak rate treatment applies.

(8) Rate period specific billing occurs when a call extends beyond one rate period. The appropriate rate treatment, either peak or off-peak, applies to the respective periods of the call.

ACCESS SERVICE

6. Switched Access Service (Cont'd)

6.2 Provision and Description of Switched Access Service (Cont'd)

6.2.8 Access Line Arrangement (ALA) N

(A) Description

(1) ALA is provided in connection with the Telephone Company's electronic and electromechanical end offices. At the option of the customer, ALA is provided on a single or multiple line group basis and is arranged for originating calling only, terminating calling only, or two-way calling. ALA, which is available to all customers, provides line side access to Telephone Company end office switches with an associated seven digit local telephone number for the customer's use in originating communications from and terminating communications to an Interexchange Carrier's interstate service or a customer provided interstate communications capability. The customer must specify the Interexchange Carrier to which the ALA service is connected or, in the alternative, specify the means by which the ALA access communications is transported to another state.

(2) ALA provides for a line side termination at the first point of switching, which shall be selected by the Telephone Company within the requested LATA, unless the customer requests a different location at which Telephone Company facilities and measurement capabilities are available to accommodate such a request.

(3) The Telephone Company assigns a seven digit telephone number associated with the selected end office to provide access to ALA in the originating direction. The assigned number will be in the form NXX-XXXX. If the customer requests a specific number that is currently unassigned, the requested number will be assigned to the customer if the Telephone Company can comply with that request with reasonable effort. N

ACCESS SERVICE

6. Switched Access Service (Cont'd)

6.2 Provision and Description of Switched Access Service (Cont'd)

6.2.8 Access Line Arrangement (ALA) (Cont'd) N

(A) Description (Cont'd)

(4) At the option of the customer, ALA will be provided:

(a) with either ground start or loop start supervisory signaling and
(b) on a single or multiple line group basis.

(5) When ALA is used in the originating direction, no address signaling is provided by the Telephone Company. If such signaling is required, it must be provided by the customer's end user using inband tone signaling techniques. Inband tone address signals will not be regenerated by the Telephone Company and will be subject to the ordinary transmission capabilities of the Local Transport provided.

(6) When used in the terminating direction, ALA is arranged with dial tone start-dial signaling. At the option of the customer, terminating ALA may be arranged for dial pulse or dual tone multifrequency address signaling, subject to the availability of equipment at the first point of switching. When ALA is provided with a Hunt Group or Uniform Call Distribution arrangement, all ALA will be provisioned with the same type of address signaling.

ALA switching, when used in the terminating direction, may be used to access valid NXXs in the LATA, local operator service (0- and 0+), Directory Assistance (411 where available and 555-1212), emergency reporting service (911 where available), time or weather announcement services of the Telephone Company, community information services of an information service provider, and other customers'services (by dialing the appropriate digits). Charges for ALA terminating calls requiring operator assistance or calls to 611 or 911 will only apply where sufficient call details are available. N

ACCESS SERVICE

6. Switched Access Service (Cont'd)

6.2 Provision and Description of Switched Access Service (Cont'd)

6.2.8 Access Line Arrangement (ALA) (Cont'd) N

(A) Description (Cont'd)

(7) Additional non-access charges will also be billed on a separate account for (1) an operator surcharge, as set forth in the local exchange tariffs, for local operator assistance (0- and 0+) calls, (2) calls to certain community information services, for which rates are applicable under Telephone Company exchange service tariffs, e.g., 976 (DIAL-IT) Network Services, and (3) calls from an ALA line to another customer's service in accordance with that customer's applicable service rates when the Telephone Company performs the billing function for that customer. For ALA calls to Directory Assistance (411 and 555-1212 where available), Switched Access Service usage rates will not apply. Instead, ALA calls to this service are subject to the Directory Assistance and Directory Access Service per call rates as set forth in Section 9.7 (A) and (B).

(8) When ALA for an individual customer (a single or entire hunt group) is discontinued at an end office, an intercept announcement is provided. This arrangement provides, for a limited period of time, an announcement that the service associated with the number dialed has been discontinued.

(B) ALA Optional Features

(1) Common Switching

(a) Hunt Group Arrangement
(b) Uniform Call Distribution Arrangement
(c) Nonhunting Number for use with Hunt Group Arrangement or Uniform Call Distribution Arrangement
(d) Call Denial on Line or Hunt Group
(e) Service Code Denial on Line or Hunt Group
(f) Three-way Call Transfer
(g) Hunt Group - C.O. Announcements
(h) Hunt Group - Overflow N

6. Switched Access Service (Cont'd)

6.2 Provision and Description of Switched Access Service (Cont'd)

6.2.8 Access Line Arrangement (ALA) (Cont'd)

(B) ALA Optional Features (Cont'd)

(1) Common Switching (Cont'd)

(I) Uniform Call Distribution with Queuing
(j) Band Advance Arrangement for Use with WATS Access Line Service
(k) Hunt Group Arrangement for Use with WATS Access Line Service
(l) Uniform Call Distribution Arrangement for Use with WATS Access Line Service
(m) Nonhunting Number for Use with Hunt Group Arrangement or Uniform Call Distribution Arrangement for Use with WATS Access Line Service
(n) Answer Supervision - Lineside
(o) Calling Number Delivery via ICLID N

(2) Transport Termination Optional Features

(a) Two-way operation with dial-pulse address signaling and loop-start supervisory signaling
(b) Two-way operation with dial-pulse address signaling and ground-start supervisory signaling
(c) Two-way operation with dual-tone multifrequency address signaling and loop-start supervisory signaling
(d) Two-way operation with dual-tone multifrequency address signaling and ground-start supervisory signaling
(e) Terminating operation with dial-pulse address signaling and loop-start supervisory signaling
(f) Terminating operation with dial-pulse address signaling and ground-start supervisory signaling
(g) Terminating operation with dual-tone multifrequency address signaling and loop-start supervisory signaling

6. Switched Access Service (Cont'd)

6.2 Provision and Description of Switched Access Service (Cont'd)

6.2.8 Access Line Arrangement (ALA) (Cont'd)

(B) ALA Optional Features (Cont'd)

(2) Transport Termination Optional Features (Cont'd)

(h) Terminating operation with dual-tone multifrequency address signaling and ground-start supervisory signaling
(i) Originating operation with loop-start supervisory signaling
(j) Originating operation with ground-start supervisory signaling

(3) Switched Transport Optional Features Sx

(a) Supervisory Signaling (as set forth in 6.1.3(A)(5)(a) preceding) Sx

(b) Customer-Specified Entry Switch Receive Level

(4) Certain other features which may be available in connection with ALA are provided under the Telephone Company's General Exchange Service Tariffs. These are:

(a) COMSTAR Features
(b) Bill Number Screening
(c) IntraLATA Extensions
(d) Remote Call Forwarding

(C) Testing Capabilities

ALA is provided, in the terminating direction where equipment is available, with seven-digit access to balance (100 type) text and milliwatt (102 type) test line. In addition to the tests described in 6.1.6 preceding which are included with the installation of service, additional Cooperative Acceptance Testing and Nonscheduled Testing are available for ALA as set forth in 13.3.5 following.

x Issued on not less than 2 days' notice under authority of Special Permission No. 93-992 of the Federal Communications Commission to defer the effective date from December 1, 1993 to December 30, 1993.

6. Switched Access Service (Cont'd)

6.2 Provision and Description of Switched Access Service (Cont'd)

6.2.9 Access Trunk Arrangement

The Access Trunk Arrangement is provided with two switched access options. These are differentiated by their technical characteristics, e.g., the manner in which an end user accesses them for originating calls. These options are offered as ATA-950 and ATA-101XXXX. The ATA-950 is provided as set forth in 6.2.10 following. The ATA-101XXXX is set forth in 6.2.11 following.

6.2.10 Access Trunk Arrangement-950 (ATA-950)

(A) Description (T)

ATA-950, which is available to all customers, provides trunkside access to Telephone Company end office switches with an associated uniform 950-XXXX access code for non-800 and non-900 Access Service for the customer's use in originating communications from and terminating communications to an IXC's interstate service or a customer (T) provided interstate communications capability. The customer must specify the IXC to which the ATA-950 is (T) connected or, in the alternative, specify the means by which the access communication is transported to another state.

(1) ATA-950 may be directly routed only to appropriately equipped electronic end office switches. ATA-950 may be provided via Telephone Company designated electronic access tandem switches to other Telephone Company electronic and electromechanical end office switches.

(2) ATA-950 switch trunk equipment is provided with (a) wink start start-pulsing signaling and (b) answer and disconnect supervisory signaling.

(This page filed under Transmittal No. 2059)

6. Switched Access Service (Cont'd)

6.2 Provision and Description of Switched Access Service (Cont'd)

6.2.10 Access Trunk Arrangement-950 (ATA-950) (Cont'd)

(A) Description (Cont'd)

(3) ATA-950 is provided with multifrequency address signaling. With the exception of rotary dial station signaling. Any other signaling required by the customer in the originating direction must be provided by the customer's end user using inband tone signaling techniques. Inband tone address signals will not be regenerated by the Telephone Company and will be subject to the ordinary transmission capabilities of the Switched Transport provided. Sx

(4) When all ATA-950 service is discontinued at an end office and/or in a LATA, an intercept announcement indicating that the service associated with the number dialed has been discontinued will be provided for a limited period.

(5) ATA-950 switching, when used in the terminating direction, may be used to access valid NXXs in the LATA, time or weather announcement services of the Telephone Company, community information services of an information service provider, and other customer's services (by dialing the appropriate digits). When directly routed to an end office, only those valid NXX codes served by that end office may be accessed. When routed through an access tandem, only those valid NXX codes served by end offices subtending the access tandem may be accessed. The customer will also be billed additional non-access charges for calls to certain community information services for which rates are applicable under the Telephone Company Exchange Service Tariff, e.g, 976 Network Service.

x Issued on not less than 2 days' notice under authority of Special Permission No. 93-992 of the Federal Communications Commission to defer the effective date from December 1, 1993 to December 30, 1993.

6. Switched Access Service (Cont'd)

6.2 Provision and Description of Switched Access Service (Cont'd)

6.2.10 Access Trunk Arrangement-950 (ATA-950) (Cont'd)

(A) Description (Cont'd)

Additionally, non-access charges will also be billed for calls from an ATA-950 trunk to another customer's service in accordance with that customer's applicable service rates when the Telephone Company performs the billing function for that customer. Calls in the terminating direction will not be completed to 950-XXXX access codes, local operator assistance (0- and 0+), Directory Assistance(411 and 555-1212), service codes 611 and 911 and 101XXXX access codes. Calls will be completed to (C)
Directory Assistance (NPA-555-1212 or 555-1212) when ATA-950 switching is combined with Directory Assistance switching. The combination of ATA-950 Switched Access Service with DA service is provided as set forth in 9. following.

ATA-950 may not be switched, in the terminating direction to ALA, ATA-101XXXX or Feature Groups. (C)

(6) The access code for ATA-950 switching is a uniform access code. The form of the uniform access code is 950-XXXX for carriers. These uniform access codes will be the assigned access numbers of all ATA-950 Switched Access Service provided to the customer by the Telephone Company.

(7) ATA-950 provides trunkside access to Telephone Company end office switches, either directly or through a Telephone Company designated Switched Access Service tandem switch. The Telephone Company will establish a trunk group (or groups) between the customer premises and end office or access tandem switches, based on the technical limitations imposed by the type, directionality and quantity of traffic specified by the customer. Different Switched Access Service arrangements may be combined in a single trunk group at the option of the Telephone Company.

(8) Bill Number Screening is provided under the Telephone Company's local and/or general exchange service tariffs.

(This page filed under Transmittal No. 1999)

6. Switched Access Service (Cont'd)

6.2 Provision and Description of Switched Access Service (Cont'd)

6.2.10 Access Trunk Arrangement-950 (ATA-950) (Cont'd)

(B) ATA-950 Package Optional Features

(1) Common Switching Optional Features

(a) Up to 7 Digit Outpulsing of access digits to customer
(b) Alternate Traffic Routing
(c) Band Advanced Arrangement for use with WATS access
(d) Hunt Group Arrangement for use with WATS Access Line Service
(e) Uniform Call Distribution Arrangement for use with WATS Access Line Service
(f) Nonhunting Number for Use with Hunt Group Arrangement or Uniform Call Distribution Arrangement for use with WATS Access Line
(g) LATA-wide Terminating Access

(h) Automatic Number Identification N

(2) WATS Access Line Termination Optional Feature

(a) E & M Supervisory Signaling

(3) Transport Termination Optional Features

(a) Rotary Dial Station Signaling

(4) Switched Transport Optional Features

(a) Customer Specification of Switched Transport Termination
(b) Supervisory Signaling (as set forth in 6.1.3(A)(5)(a) preceding
(c) Customer Specified Entry Switch Receive Level

6. Switched Access Service (Cont'd)

6.2 Provision and Description of Switched Access Service (Cont'd)

6.2.10 Access Trunk Arrangement-950 (ATA-950) (Cont'd)

(C) Testing Capabilities

ATA-950 is provided, in the terminating direction where equipment is available, with seven-digit access (or ten-digit access if required with LATA-wide terminating access) to balance (100 type) test line, milliwatt (102 type) test line, nonsynchronous or synchronous test line, automatic transmission measuring (105 type) test line, data transmission (107 type) test line, loop-around test line, short-circuit test line and open-circuit test line. In addition to the tests described in 6.1.6 preceding which are included with the installation of service, additional Cooperative Acceptance Testing, Automatic Scheduled Testing, Cooperative Scheduled Testing, Manual Scheduled Testing, and Non-Scheduled Testing, are available in 13.3.5 (Testing (T)
Services) following. (T)

(This page filed under Transmittal No. 2059)

6. Switched Access Service (Cont'd)

6.2 Provision and Description of Switched Access Service (Cont'd)

6.2.11 Access Trunk Arrangement-101XXXX (ATA-101XXXX)

(A) Description

The ATA-101XXXX is available to all customers at Telephone Company designated electronic end office switches, whether routed directly or via Telephone Company designated electronic access tandem switches. ATA-101XXXX provides trunkside access to end office switches with an associated uniform 101XXXX access code for use in originating and terminating communications.

(1) The access code for ATA-101XXXX switching is a uniform access code of the form 101XXXX. These uniform access codes will be the assigned access numbers of all ATA-101XXXX access provided to the customer by the Telephone Company. No access code is required for calls to a customer over ATA-101XXXX Switched Access Service if the end user's telephone exchange service is arranged for presubscription to that customer, as set forth in 13.3.3 (Presubscription and Preselection) following. (T)

When the 101XXXX access code is used, ATA-101XXXX switching also provides for dialing the digit 0 for access to the customer's operator, 911 for access to the Telephone Company's emergency reporting service, or the end-of-dialing digit (#) for cut-through access to the customer's premises.

(2) When the ATA-101XXXX is provided with PSDS Switching Capability, the dialing pattern will be modified as set forth in 6.2.4.(A)(10) preceding. (T) (T)

(3) ATA-101XXXX switch trunk equipment is provided with:

(a) wink start start-pulsing signaling and

(b) answer and disconnect supervisory signaling, or out of band signaling when the CCSAC optional feature is specified.

(This page is filed under Transmittal No. 2059)

(T)
(D)

6. Switched Access Service (Cont'd)

6.2 Provision and Description of Switched Access Service (Cont'd)

6.2.11 Access Trunk Arrangement-101XXXX (ATA-101XXXX) (Cont'd) (C)

(A) Description (Cont'd)

(4) ATA-101XXXX is provided with multifrequency address or SS7 signaling. Up to 12 digits of the called party number dialed by the customer's end user using dual tone multifrequency or dial pulse address signaling will be provided by the Telephone Company equipment to the customer premises where the Switched Access Service terminates. Called party number signals will be subject to the ordinary transmission capabilities of the Switched Transport provided. (C)

(5) ATA-101XXXX switching, when used in the terminating direction, may be used to access valid NXXs in the LATA, time or weather announcement services of the Telephone Company, community information services of an information service provider, and other customer ATA-101XXXX services (by dialing the appropriate codes) when such services can be reached using valid NXX codes. When directly routed to an end office, only those valid NXX codes service by that office may be accessed. When routed through an access tandem, only those valid NXX codes served by end offices subtending the access tandem may be accessed. The customer will also be billed additional non-access charges for calls to certain community information services, for which rates are applicable under Telephone Company exchange service tariffs, e.g., 976 Network Service. Additionally, non-access charges will also be billed for calls from an ATA-101XXXX trunk to another customer’s service in accordance with that customer’s applicable service rates when the Telephone Company performs the billing function for that customer. Calls in the terminating direction will not be completed to 950-XXXX access codes, local operator assistance (0- and 0+), Directory Assistance (411 and 555-1212), services codes 611 and 911 and 101XXXX access codes. Call will be completed to (C) (C) (C) (C)

(This page filed under Transmittal No. 1999)

6. Switched Access Service (Cont'd)

6.2 Provision and Description of Switched Access Service (Cont'd)

6.2.11 Access Trunk Arrangement-101XXXX (ATA-101XXXX) (Cont'd)

(A) Description (Cont'd)

Directory Assistance (NPA-555-1212 and 555-1212) when ATA-101XXXX switching is combined with Directory Assistance switching. The combination of ATA-101XXXX Switched Access Service with DA service is provided as set forth in 9. following. ATA-101XXXX may not be switched in the terminating direction to other Switched Access Services.

(6) The Telephone Company will establish a trunk group or groups for the customer at end office switches or access tandem switches where ATA-101XXXX switching is provided. When required by technical limitations, a separate trunk group will be established for each type of ATA-101XXXX switching arrangement provided. ATA-101XXXX or other switching arrangements may be combined in a single trunk group at the option of the Telephone Company.

(7) Where no access code is required, or available, the number dialed by the end user shall be a seven to eleven-digit number for calls in the NANP. For IDDD is (T) available for calls outside the NANP, a seven to twelve-digit number may be dialed. The form of the numbers dialed by the end user is NXX-XXXX, 0 or 1+ NXX-XXXX, NPA + NXX-XXXX, 0 or 1+ NPA + NXX-XXXX, and, when the end office is equipped for IDDD, 01+ CC + NN (T) or 011+ CC + NN.

(This page filed under Transmittal No. 2059)

6. Switched Access Service (Cont'd)

6.2 Provision and Description of Switched Access Service (Cont'd)

6.2.11 Access Trunk Arrangement-101XXXX (ATA-101XXXX) (Cont'd) (C)

(A) Description (Cont'd)

(8) ATA-101XXXX switching will be arranged to accept calls (C)
from telephone exchange service locations without the
need for dialing 101XXXX uniform access code. Each (C)
telephone exchange service line may be marked with a
presubscription code to identify which 101XXXX code it (C)
calls will be directed to for interLATA service.
Presubscription codes are applied as set forth in
13.3.3 following.

(9) When the 101XXXX 1+ or 011+ sent-paid access code is (C)
dialed from a Telephone Company pay telephone to a
customer that has not ordered per 6.3.2(B) or (C)
following, the calls will be routed to a Telephone
Company recording.

When a customer has had ATA-950 or FGB access in an
end office and subsequently replaces the access with
ATA-101XXXX access, at the customer's request and (C)
where facilities permit, the Telephone Company, will,
for a period of 90 days, direct calls dialed by the
customer's end users using the customer's previous
ATA-950 or Feature Group B access service. The
customer must be prepared to handle normally dialed
ATA-101XXXX calls, as well as calls dialed with the (C)
ATA-950 access code which require the customer to
receive additional address signaling from the end
user. Such calls will be rated as ATA-101XXXX. (C)

(10) When a customer has had ATA-950 access in an end
office and subsequently replaces the ATA-950 access
with ATA-101XXXX access, at the mutual agreement of (C)
the customer and the Telephone Company, the Telephone
Company will direct calls dialed by the customer's
end users using the customer's previous ATA-950
access code to the customer's ATA-101XXXX access (C)
service.

(This page filed under Transmittal No. 1999)

6. Switched Access Service (Cont'd)

6.2 Provision and Description of Switched Access Service (Cont'd)

6.2.11 Access Trunk Arrangement-101XXXX (ATA-101XXXX) (Cont'd) (C)

(A) Description (Cont'd)

When a customer has both ATA-950 and ATA-101XXXX (C) access in the same end office or separate end offices which subtend the same access tandem and chooses to route his originating ATA-950 calls over ATA-101XXXX (C) access, the Telephone Company will direct calls dialed by the customer's end users using the customer's ATA-950 access code to the customer's ATA-101XXXX access (C) service. Such calls, whether originating from an equal access or non-equal access end office, will be rated as ATA-101XXXX. (C)

The customer must be prepared to handle normally dialed ATA-101XXXX calls, as well as, calls dialed (C) with the ATA-950 access code which requires the customer to receive additional address signaling from the end user. Such calls will be rated as ATA-101XXXX. (C)

(11) ATA-101XXXX is available to accept calls with (C) multifrequency or CCSAC signaling. With CCSAC signaling, the customer may also order Charged Number (CN) as an additional feature.

(C)

(B) ATA-101XXXX Optional Features

(1) Common Switching Optional Features

(a) Automatic Number Identification (ANI)
(b) Service Class Routing
(c) Alternate Traffic Routing
(d) Call Gapping Arrangement
(e) Trunk Access Limitation
(f) International Carrier Option
(g) End Office End User Line Service Screening for Use with WATS Access Line Service
(h) Hunt Group Arrangement for Use with WATS Access Line Service
(I) Hunt Group Arrangement for Use with PVN Access Line Service

(This page filed under Transmittal No. 1999)

6. Switched Access Service (Cont'd)

6.2 Provision and Description of Switched Access Service (Cont'd)

6.2.11 Access Trunk Arrangement-101XXXX (ATA-101XXXX) (Cont'd) (C)

(B) ATA-101XXXX Optional Features (Cont'd) (C)

(1) Common Switching Optional Features (Cont'd)

(j) Uniform Call Distribution Arrangement for Use with WATS Access Line Service
(k) Nonhunting Number for Use with Hunt Group Arrangement or Uniform Call Distribution Arrangement for WATS Access Line Service
(l) Band Advance Arrangement for Use with WATS Access Line Service
(m) Cut-through
(n) Public Switched Digital Service (PSDS) Access
(o) Calling Party Number (CPN)*
(p) Charge Number (CN)
(q) Carrier Selection Parameter (CSP)
(r) Access Transport Parameter (ATP)

(2) Transport Termination Optional Features

(a) Operator Trunks - Modified Operator Services(MOS) Direct - i.e., Coin and Combined Coin and Non-Coin.

(b) Operator Trunks - Exchange Access Operator Services Systems (EAOSS) - i.e., Coin 1+ and 011+ sent-paid as well as 0+, 00- and 01+ where technically feasible.

(This page filed under Transmittal No. 1999)

6. Switched Access Service (Cont'd)

6.2 Provision and Description of Switched Access Service (Cont'd)

6.2.11 Access Trunk Arrangement-101XXXX (ATA-101XXXX) (Cont'd) (C)

(B) ATA-101XXXX Optional Features (Cont'd) (C)

(3) Switched Transport Optional Features

(a) Supervisory Signaling (as set forth in 6.1.3(A)(5)(a) preceding)

(b) Common Channel Signaling Access Capability (CCSAC) (as set forth in 6.1.3(A),(5),(d) preceding).

(c) Operator Transfer Service (as set forth in 6.1.3(A),(6),(a) preceding).

(d) 64 Clear Channel Capability (CCC) (as set forth in 6.1.3(A),(5),(e) preceding).

(4) WATS Access Line Terminating Optional Features

(a) E & M Supervisory Signaling

(b) Dialed Number Identification Service

(5) Tandem Signaling Optional Feature

(a) CIC and OZZ (as set forth in 6.1.3(A)(5)(f) preceding).

(b) TNS (as set forth in 6.1.3(A)(5)(f) preceding).

(This page filed under Transmittal No. 1999)

6. Switched Access Service (Cont'd)

6.2 Provision and Description of Switched Access Service (Cont'd)

6.2.11 Access Trunk Arrangement-101XXXX (ATA-101XXXX) (Cont'd)

(C) Testing Capabilities

ATA-101XXXX is provided, in the terminating direction where equipment is available, with seven-digit access to balance (100 type) test line, milliwatt (102 type) test line, nonsynchronous or synchronous test line, automatic transmission measuring (105 type) test line, data transmission (107 type) test line, loop-around test line, short-circuit test line and open-circuit test line. In addition to the tests described in 6.1.6 preceding which are included with the installation of service, additional Cooperative Acceptance Testing, Automatic Scheduled Testing, Cooperative Scheduled Testing, Manual Scheduled Testing, and Non-Scheduled Testing, are available for ATA-101XXXX as set forth in 13.3.5 (Testing Services) following. (T)

(This page filed under Transmittal No. 2059)

6. Switched Access Service (Cont'd)

6.2 Provision and Description of Switched Access Service (Cont'd)

6.2.12 Direct Inward Dial (DID) Switched Access Service

(A) Description

(1) The DID Switched Access Service is a Private Branch Exchange (PBX) Trunk that uses Central Office trunks in connection with providing direct inward dialing service from the telecommunications network to the customer's premises for use in connection with dial switching or number identifying equipment. DID Switched Access Service is available only in the terminating direction to the PBX.

(2) DID Switched Access Service is provided as a trunkside switching service. The switch trunk equipment is provided with wink start-pulsing signals and answer and disconnect supervisory signaling. Three or four digit outpulsing of called party telephone numbers to the customer can be provided.

(3) DID Switched Access Service must be ordered with blocks of telephone numbers. DID station number assignments are provisioned in blocks of 100. Vacant DID stations or stations not in use must be intercepted by the customer. A DID station number cannot be removed from a group to provide non-DID service.

(4) DID Switched Access Service is provided with Dual Tone Multifrequency (DTMF) or Dial Pulse (DP) address signaling when provided at suitably equipped electronic end offices. No other address signaling is provided by the Telephone Company. Additional address signaling, if required by the customer, must be provided by the customer's end user using inband tone signaling techniques. Such inband tone address signals will not be regenerated by the Telephone Company and will be subject to the ordinary transmission capabilities of the Switched Transport. Sx

x Issued on not less than 2 days' notice under authority of Special Permission No. 93-992 of the Federal Communications Commission to defer the effective date from December 1, 1993 to December 30, 1993.

6. Switched Access Service (Cont'd)

6.2 Provision and Description of Switched Access Service (Cont'd)

6.2.12 Direct Inward Dial (DID) Switched Access Service (Cont'd)

(A) Description (Cont'd)

(5) The Telephone Company will establish a trunk group or groups for the customer at end office switches where DID Switched Access Service is provided. DID Switched Access Service requires a minimum of one circuit termination per trunk group requested. A separate identity is required for each separate trunk group.

(6) DID Switched Access Service requires a minimum of two DID PBX trunks per block of 100 telephone numbers requested.

(B) Transmission Specifications

DID Switched Access Service is provided a transmission quality parameter of no more than 5.5 db loss from the customers serving wire center to the PBX. DID Switched Access Service is provided only as a two-wire analog service.

(C) Testing Capabilities

In addition to the installation and acceptance test normally provided with the service, additional Cooperative Acceptance Testing, Cooperative Scheduled Testing, Manual Scheduled Testing and Non-Scheduled Testing are available as set forth in 13.3.5 (Testing (T)
Services) following. (T)

(D) Limitations

DID Switched Access Service central office trunk lines cannot be:

(1) extended to an off-premise location;
(2) coterminated with residence service.

(This page filed under Transmittal No. 2059)

6. Switched Access Service (Cont'd)

6.2 Provision and Description of Switched Access Service (Cont'd)

6.2.12 Direct Inward Dial (DID) Switched Access Service (Cont'd)

(E) Interoffice Mileage

Interoffice mileage is applicable when the customer orders the DID Switched Access Service from a Telephone Company end office other than the customer's serving wire center. The interoffice mileage rate element will apply to the airline transport miles between the customer's serving wire center and the end office where the DID Switched (T) Access Service connection resides. Airline mileage is measured using the V&H Coordinates Method as set forth in the NECA Tariff F.C.C. No. 4. (T)

(F) DID Trunk Queuing

The DID Trunk Queuing option permits customers of DID (T) Switched Access Service to hold a specified number of calls (T) in queue for delayed delivery when all circuits in a DID trunk group are busy. This option allows calls, which (T) otherwise would have received a busy signal, to be held and rerouted to the customer's DID trunk group when a circuit (T) becomes available.

Calls held in queue will receive a recorded delay call announcement and are delivered on a "first in first out" basis. The customer may order and record up to a maximum of four delay announcements. Each delay announcement may vary in length from three to twenty four seconds.

DID Number Conditioning is required feature on all DID numbers assigned to a trunk group equipped with DID Trunk (T) Queuing. DID Number Conditioning for use with DID Trunk Queuing must be assigned in sequential order. The customer determines the number of queue slots they require, however, the number of slots cannot exceed the number of DID trunks provisioned in a DID trunk group. (T)

DID Trunk Queuing is available only from the Telephone Company's 1AESS electronic end offices where facilities and operating conditions permit.

(This page filed under Transmittal No. 2059)

6. Switched Access Service (Cont'd)

6.2 Provision and Description of Switched Access Service (Cont'd)

6.2.12 Direct Inward Dial (DID) Switched Access Service (Cont'd)

(G) Description and Application of Rates and Charges

Monthly recurring rates and nonrecurring charges for DID Switched Access Service can be found in 6.8.11 following.

The access rate components of Local Switching and Switched Transport are recovered through flat rated, non-usage sensitive rate elements of the DID PBX Trunk and the DID Circuit Termination. An interstate Carrier Common Line (T)
(CCL) charge is not applicable to DID Switched Access Service because this service is a terminating only service and terminating CCL usage is presently charged to all interstate Feature Groups, ALA and ATA services required to (T)
complete IXC traffic to a DID PBX Trunk. (T)

(This page filed under Transmittal No. 2059)

6. Switched Access Service (Cont'd)

6.2 Provision and Description of Switched Access Service (Cont'd)

6.2.13 Toll Free Access Service

Toll Free Access Service is an originating offering utilizing FGD Switched Access Service and/or the SS7 Signaling Network. The basic service provides a customer identification function with Area of Service (AOS) routing, based on the dialed toll free number, at Telephone Company Toll Free Access Service Switching Points (SSPs) and the Toll Free Access Service Control Point (SCP). AOS routing is based on originating LATA, NPA, or NPA-NXX.

When a toll free call is originated by an end user, the toll free call is held at the SSP while a query is launched to the SCP. The customer identification with AOS, in the form of SS7 signaling information, is passed back from the SCP to the SSP from which the query originated and the call can then be routed to the correct customer location. (T)

The IXC will be assessed a charge only for a completed data base query. A data base query consists of a signaling query and answer. The call is held at the SSP while the data base query is performed. When the data base returns the signaling information to the SSP, enabling the call to be directed to the appropriate carrier, the 800 data base query is deemed completed. Billing for the signaling will commence at the time the data base query is completed. The IXC will be assessed a charge for a completed data base query even if the underlying call is not completed (e.g., the call for which the data base query was made). (T) (T)

Calls originating from a service area in which the customer has not ordered Toll Free Access Service will be routed to intercept.

Customer identification for Canadian and Caribbean toll free numbers will be performed by Six Digit Master Number List Turnaround.

(This page filed under Transmittal No. 2059)

(T)
(D)

ACCESS SERVICE

6. Switched Access Service (Cont'd)

6.2 Provision and Description of Switched Access Service (Cont'd)

6.2.13 Toll Free Access Service (Cont'd) T

In addition to the basic customer identification function with AOS, Toll Free Access Service offers the following optional features: T

(A) POTS Translation

The customer may choose to have the dialed toll free number translated to the terminating POTS number and delivered to the customers location in that form. T

ACCESS SERVICE

6. Switched Access Service (Cont'd)

6.2 Provision and Description of Switched Access Service (Cont'd)

6.2.13 Toll Free Access Service (Cont'd)

(B) Multiple Destination and Routing

The customer may create routing schemes utilizing:

(1) Time of Day
(2) Day of Week
(3) Day of Year
(4) Allocation of Traffic by Percentage
(5) NPA-NXX-XXXX

Toll Free Access Service will be provisioned in accordance with the technical characteristics available with FGD and ATA-101XXXX and with SS7 network (C) protocol as described in Pacific Bell Network Interface Document PUB-L-780023-PB/NB and Bellcore Common Channel Signaling Network Specification Technical Reference TR-TSV-000905.

Rates and charges associated with Toll Free Access Service are as described in 6.8.12 following.

(This page filed under Transmittal No. 1999)

6. Switched Access Service (Cont'd)

6.2 Provision and Description of Switched Access Service (Cont'd)

6.2.14 500 Access Service

500 Access Service is an originating service utilizing trunk side Switched Access Service and is available at appropriately equipped Telephone Company end offices or tandem switches. The service provides a 500 Access Service customer identification function based on the dialed 500 number.

When a 0+500+NXX-XXXX or 1+500+NXX-XXXX call is originated by an end user, the Telephone Company will perform the 500 Access Service customer identification function based on the dialed digits to determine the customer location to which the call is to be routed. If the call originates from an end office switch not equipped to provide the 500 Access Service customer identification function, the call will be routed to an office at which the function is available. Once 500 Access Service customer identification has been established, the call will be routed to the customer. Calls originating in an end office switch in which the customer has not ordered 500 Access Service will be routed to intercept. The 500 Access Service customer has the option to order 0+ 500, 1+ 500 or both. 0+ 500 and 1+ 500 originating calls from 101XXXX, inmate service, toll restricted lines, WATS, FGA and ALA with Call Access Denial will be blocked. (T)
1+ 500 originating calls from Coin Hard Screen, Prepay, Hotel/Motel ANI 7, Hospital, PACBELL Charge-A-Call and AT&T Public Access Line will be blocked. If the 500 Access Service customer chooses not to accept a call that the Telephone Company routes, then the 500 Access Service customer is responsible for providing its own blocking and announcement explaining the reason the call cannot be completed. If the 500 Access Service customer accepts 500 calls and subsequently cannot collect from the calling or called party, the Telephone Company is not responsible for the uncollected charges. Calls to 0- will reach a live operator intercept who will give dialing instructions to the calling party to dial 1+ 500 or 0+ 500. International dialing (e.g., 01 and 011+500+NXX-XXX) will not be accepted for reaching a 500 access service customer.

(This page filed under Transmittal No. 2059)

6. Switched Access Service (Cont'd)

6.2 Provision and Description of Switched Access Service (Cont'd)

6.2.14 500 Access Service (Cont'd)

When 500 Access Service is provided from an end office equipped with equal access capabilities, all such service will be provisioned in accordance with the technical characteristics available with FGD and ATA-101XXXX. (T)

When 500 Access Service is provided from an end office not equipped with equal access capabilities, such service will be provisioned in accordance with the technical characteristics of FGC or FGD. (T)

500 Access Service originating from equal access end offices with the calling party's identification will be provided using access signaling with overlap outpulsing and ten-digit ANI, or with SS7 out of band signaling when the customer has ordered the CCSAC optional feature with FGD or ATA-101XXXX. (T)

500 Access Service originating from an independent local exchange company non-equal access end office or handicapped sources routed via operator switches without complete end user identification will be provided using traditional signaling. 500 Access Service traffic will be combined in the same trunk group arrangement with other 500 and non-500 Access Service traffic unless the customer orders a separate trunk group only for its 500 Access Service traffic. The customer can obtain a separate trunk group using traditional signaling at the access tandem.

500 Access Service usage measurement shall be in accordance with the regulations set forth in 6.7.8 following for FGD and ATA-101XXXX. (T)

The rates and charges for 500 Access Service are described in 6.8.14 following.

(This page filed under Transmittal No. 2059)

6. Switched Access Service (Cont'd)

6.3 Local Switching Optional Features and BSEs (T)

Following are descriptions of the various optional features that are available in lieu of, or in addition to, the standard features provided with the Feature Groups.

6.3.1 Common Switching

(A) Call Denial on Line or Hunt Group (T)

This screening option limits terminating ALA and FGA calls to (T) completion within the LATA where the ALA and FGA line resides. (T) InterLATA and international calls are blocked as well as calls which may potentially terminate outside the LATA. Blocked calls are:

- Operator-handled calls (0-, 00-, 0+, 011+, 01+)
- Calls to 950 NXX codes
- Calls to the 900 NPA
- Calls to 976 NXX code
- Calls to 101XXXX interLATA
- Calls to 959 NXX code

The call denial option allows calls to terminate to any NXX within the LATA served by the ALA and FGA line that doesn't have a special charge associated with it. Calls are permitted to 611, 911, 7DZUM, 800 and 7D/10D intraLATA toll.

Blocked calls are routed to a reorder tone or recorded announcement. This feature is provided in all Telephone Company electronic end offices, and where available, in electromechanical end offices. This option is available with ALA and FGA. (T)

(This page filed under Transmittal No. 2059)

6. Switched Access Service (Cont'd)

6.3 Local Switching Optional Features and BSEs (Cont'd) (T)

6.3.1 Common Switching (Cont'd)

(B) Service Code Denial on Line or Hunt Group (T)

This screening option disallows completion of terminating ALA and FGA calls to local directory assistance (411 and 555-1212), to service codes 611 and 911, and to local operator assistance (0- and 00-). Blocked calls are routed to a reorder tone or recorded announcement. This feature is provided in all Telephone Company electronic end offices and, where available, in electromechanical end offices. This option is available with ALA and FGA. (T) (T)

(C) Hunt Group Arrangement (T)

This option provides the ability to sequentially access one of two or more line side connections in the originating direction, when the access code of the line group is dialed. This feature is provided in all Telephone Company end offices. It is available with ALA and FGA. ALA and FGA services with different methods of providing off-hook supervisory signaling cannot be mixed in the same hunt group arrangement. (T)

(This page filed under Transmittal No. 2059)

6. Switched Access Service (Cont'd)

6.3 Local Switching Optional Features and BSEs (Cont'd) (T)

6.3.1 Common Switching (Cont'd)

(D) Uniform Call Distribution Arrangement (T)

This option provides a type of multiline hunting arrangement which provides for an even distribution of calls among the available lines in a hunt group. Where available, this feature is provided in Telephone Company electronic end offices only. It is available with ALA and FGA. (T)

(E) Nonhunting Number for Use with Hunt Group or Uniform Call Distribution Arrangement (NHN)

This option provides an arrangement for an individual line within a multiline hunt or uniform call distribution group that provides access to that line within the hunt or uniform call distribution group when it is idle or provides busy tone when it is busy, when the nonhunting number is dialed. Where available, this feature is provided in Telephone Company electronic end offices only. It is available with ALA and FGA. (T)

(F) Automatic Number Identification (ANI)

This option provides the automatic transmission of a seven or ten digit number and information digits to the customer's premises for calls originating in the LATA, to identify the calling station. The ANI feature is an end office software function which is associated on a call-by-call basis with (1) all individual transmission paths in a trunk group routed directly between an end office and a customer's premises or, where technically feasible, with (2) all individual transmission paths in a trunk group between an end office and an access tandem, and a trunk group between an access tandem and a customer's premises.

(This page filed under Transmittal No. 2059)

6. Switched Access Service (Cont'd)

6.3 Local Switching Optional Features and BSEs (Cont'd) (T)

6.3.1 Common Switching (Cont'd)

(F) Automatic Number Identification (ANI) (Cont'd) (T)

The seven-digit ANI telephone number is available with FGB (T)
and FGC. Technical limitations may exist in (T)
Telephone Company switching facilities which require ANI
to be provided only on a directly trunked basis. ANI will
be transmitted on all calls except those originating from
multiparty lines or when an ANI failure has occurred.
ANI is provided from end offices at which Telephone Company
recording for End User billing is not provided, or where
it is not required, as with 800 service. It is not
provided from end offices for which the Telephone Company
needs to forward ANI to its recording equipment.

The ten-digit ANI telephone number is available with FGD, (T)
ATA-950-XXXX, and ATA-101XXXX with multifrequency address
signaling. When the CCSAC optional feature is specified,
the customer may obtain an ANI equivalent by ordering the
Charge Number optional feature, as described in 6.3.1(AA),
following. The ten-digit ANI telephone number consists of
the Numbering Plan Area (NPA) plus the seven-digit ANI
telephone number. The ten-digit ANI telephone number will
be transmitted on all calls except those identified as
multiparty lines, coin stations and coinless pay telephones
using FGB, ATA-950 or ANI failure, in which case only the (T)
NPA will be transmitted (in addition to the information
digits described below).

With FGB and ATA-950, technical limitations exist in the (T)
Telephone Company's switching facilities which require
ordering this optional feature on trunks separate
from existing FGB and ATA-950 arrangements. ANI is only
available in suitably equipped end offices or access tandem
switches.

Where ANI cannot be provided, e.g., on calls from 4- and 8-
party services, information digits will be provided to
the customer.

(This page filed under Transmittal No. 2059)

6. Switched Access Service (Cont'd) (T)

6.3 Local Switching Optional Features and BSEs (Cont'd) (T)

6.3.1 Common Switching (Cont'd) (T)

(F) Automatic Number Identification (ANI) (Cont'd) (T)

The information digits supply information such as: (1) telephone number is the station billing number - no special treatment required, (2) multiparty line - telephone number is a 4- or 8-party line and cannot be identified - number must be obtained via an operator or in some other manner, (3) ANI failure has occurred in the end office switch which prevents identification of calling telephone number - must be obtained by operator or in some other manner, (4) hotel/motel originated call which requires room number identification, (5) public/semi-public screened services, hospital, etc. call which requires special screening or handling by the customer, and (6) call is an Automatic Identified Outward Dialed (AIOD) call from customer premises equipment. The ANI telephone number is the listed telephone number of the customer and is not the telephone number of the calling party.

Flexible ANI is an enhancement to ANI and facilitates information digits that currently are not available. The Flexible ANI feature allows the Telephone Company to (T) associate new ANI information digit assignments with originating routing and screening translations as they are assigned by the North American Numbering Plan (NANP). Flexible ANI information digits are available from technically equipped end offices.

These ANI information digits are available with ATA-950, ATA-101XXXX and FGB, FGC, and FGD only. (T)

(This page filed under Transmittal No. 2059)

6. Switched Access Service (Cont'd)

6.3 Local Switching Optional Features (Cont'd)

6.3.1 Common Switching (Cont'd)

(G) Up-to-7-Digit Outpulsing of Access Digits to Customer (T)

This option provides for the end office capability of providing up to 7-digits of the uniform access code (950-XXXX) to the customer's premises. The customer can C request that only some of the digits in the access code be forwarded. The access code digits would be provided to the customer's premises using multi-frequency signaling, and transmission of the digits would precede the forwarding of ANI if the feature were provided. It is available with ATA-950 and FGB. (T)

(H) Cut-Through (T)

This option allows end users of the customer to reach the customer's premises by dialing 101XXXX + #. This option provides for connection of the call to the premises of the customer indicated by the 101XXXX code upon receipt of the # digit which indicates end of dialing. The (T) Telephone Company will not record any other dialed digits for these calls. This option is available with ATA-101XXXX and FGD. (T)

(This page filed under Transmittal No. 2059)

6. Switched Access Service (Cont'd)

6.3 Local Switching Optional Features (Cont'd) C

6.3.1 Common Switching (Cont'd) T

(I) Revertive-Pulse Address Signaling (ADS RP)

This option provides for a dc pulsing arrangement that transmits intelligence in the following manner:

(1) The equipment at the originating location presets itself to represent the number of pulses required and to count the pulses received from the terminating location.

(2) The equipment at the terminating location transmits a series of pulses by the momentary grounding of its battery supply until the originating location breaks the dc path to indicate that the required number of pulses has been counted.

This option is available with Feature Group C.

(J) Delay-Dial-Start Pulsing Signaling (DDSP)

This option provides a method of indicating to the near end trunk circuit readiness to accept address signaling information by the far end trunk circuit. Delay dial is often referred to as an off-hook, on-hook signaling sequence. The delay dial signal is the off-hook interval and the start-pulsing signal is the on-hook interval. With integrity check, the calling office will not outpulse until a delay-dial (off-hook) signal followed by a start-pulsing (on-hook) signal has been identified at the calling office. This option is available with Feature Group C.

6. Switched Access Service (Cont'd)

6.3 Local Switching Optional Features and BSEs (Cont'd) (T)

6.3.1 Common Switching (Cont'd) (T)

(K) Immediate-Dial-Pulse Address Signaling (T)

This option provides for the forwarding of dial pulses from the Telephone Company end office to the customer without the need of a start-pulsing signal from the customer. It is available with FGC. (T)

(L) Dial-Pulse Address Signaling (T)

This trunk-side option provides for the transmission of number information, e.g., called number, between the end office switching system and the customer's premises (in either direction) by means of direct current pulses. It is available with FGC. (T)

(M) Panel-Call-Indicator Address Signaling (T)

This option provides a dc pulsing arrangement in which each digit is transmitted as a series of four marginal and polarized impulses. It is available with FGC. (T)

(N) Service Class Routing (T)

This option provides the capability of directing originating traffic from an end office to a trunk group to a customer designated premises, based on the line class of service (e.g., coin, multiparty or hotel motel), service prefix indicator (e.g., 0-, 0+, 01+ or 011+) or service access code (e.g., 500, 800 or 900). It is provided in suitably equipped end office or access tandem switches and is available with FGC, FGD and ATA-101XXXX. (T)

(This page filed under Transmittal No. 2059)

6. Switched Access Service (Cont'd)

6.3 Local Switching Optional Features and BSEs (Cont'd) (T)

6.3.1 Common Switching (Cont'd)

(O) Alternate Traffic Routing (T)

(1) Multiple Customer Premises Alternate Routing

This option provides the capability of directing originating traffic from an end office (or appropriately equipped access tandem) to a trunk group (the "high usage" group) to a customer-designated premises until that group is fully loaded, and then delivering additional originating traffic (the "overflowing" traffic) from the same end office or access tandem to a different trunk group (the "final" group) to a second customer designated premises. The customer shall specify the last trunk CCS desired for the high usage group. It is provided in suitably equipped end office or access tandem switches and is available with ATA-950, ATA-101XXXX and FGB, FGC and (T)
FGD. (T)

(2) End Office Alternate Routing When Ordered in Trunks

This option provides an alternate routing arrangement for customers who order originating traffic in trunks and these trunks serve an end office via two routes: one route via an access tandem and one direct route. The feature allows the customer originating traffic from the end office to be offered first to the direct trunk group and then overflow to the access tandem group. It is provided in suitably equipped end offices and is available with ATA-950, ATA-101XXXX and FGB, FGC and FGD. When ordered with FGB or ATA-950, (T)
only DTT rates will apply. Pursuant to the Order in CC Docket 91-213, released December 29, 1993, the Telephone Company, effective July 1, 1994, will not require customers to provide the percent of traffic estimated to overflow from the direct group to the access tandem group.

Alternate routing is not available with the Tandem Signaling optional feature described in Section 6.1.3(A)(5)(f), preceding.

(This page filed under Transmittal No. 2059)

6. Switched Access Service (Cont'd)

6.3 Local Switching Optional Features and BSEs (Cont'd) (T)

6.3.1 Common Switching (Cont'd)

(P) Trunk Access Limitation (T)

This option provides for the routing of originating 900 service calls to a specified number of transmission paths in a trunk group, in order to limit (choke) the completion of such traffic to the customer. Calls to the designated service which could not be completed over the subset of transmission paths in the trunk group, i.e., the choked calls, would be routed to reorder tone. It is provided in all Telephone Company electronic end offices and where available in electromechanical end offices. It is available with ATA-101XXXX and Feature Groups C and D. Either Trunk Access Limitation, or Call Gapping Arrangement, 6.3.1(Q), following, should be used with originating 900 Service where a concentrated high volume of 900 calling is expected. The Telephone Company will work cooperatively with the customer to determine when such options may be necessary.

(Q) Call Gapping Arrangement (T)

This option, provided in suitably equipped end office switches, provides for the routing of originating calls to 900 service to be switched in the end office to all transmission paths in a trunk group at a prescribed rate of flow, e.g., one call every five seconds, in order to limit (choke) the completion of such traffic to the customer. This option is activated at the request of the customer during normal business hours i.e., 8:00 a.m. to 5:00 p.m. In addition, this option may be activated for no longer than a 24 hour period. Calls to the designated service which are denied access by this feature, i.e., the choked calls, would be routed to a no-circuit announcement. It is provided in selected ATA-101XXXX and FGD equipped end offices and is available (T)
only with ATA-101XXXX and FGD. Either Trunk Access (T)
Limitation, 6.3.1(P) preceding, or Call Gapping Arrangement, following, should be used with originating 900 Service where a concentrated high volume of 900 calling is expected. The Telephone Company will work cooperatively with the customer to determine when such options may be necessary.

(This page filed under Transmittal No. 2059)

ACCESS SERVICE

6. Switched Access Service (Cont'd)

6.3 Local Switching Optional Features and BSEs (Cont'd) (T)

6.3.1 Common Switching (Cont'd) (T)

(R) International Carrier Option (T)

This option allows for ATA-101XXXX and FGD end offices or access tandem switches equipped for International Direct Distance Dialing to be arranged to forward the international calls of one or more international carriers to the customer (i.e., the Telephone Company is able to route originating international calls to a customer other than the one designated by the end user either through presubscription or 101XXXX dialing). This arrangement requires provision of written verification to the Telephone Company that the customer is authorized to forward such calls. The written verifications must be in the form of a letter of agency authorizing the customer to order the option on behalf of the international carrier. This option is only provided at Telephone Company end offices or access tandems equipped for International Direct Distance Dialing. It is available with ATA-101XXXX and FGD. (T) (T)

(S) Band Advance Arrangement for Use with WATS Access Line Service* (T)

This option, which is provided in association with two or more WATS Access Line Services, provides for the automatic overflow of terminating calls to a WATS Access Line Service group, when that group has exceeded its call capacity, to another WATS Access Line Service group with a band designation equal to or greater than that of the overflowing WATS Access Line Service group. Band Advance will only be provided from one WATS Access Line Service group to another WATS Access Line Service group of the same IXC. This arrangement does not provide for call overflow from a group with a higher band designation to one with a lower one. This option is available with Access Arrangements and FGA, FGB, FGC and FGD. (T) (T)

* This optional feature is not available with unbanded service, such as UWAL.

(This page filed under Transmittal No. 2059)

6. Switched Access Service (Cont'd)

6.3 Local Switching Optional Features and BSEs (Cont'd) (T)

6.3.1 Common Switching (Cont'd)

(T) End Office End User Line Service Screening for Use with Originating Only WATS Access Line Service (T)

This option provides the ability to verify that an end user has dialed a called party address (by screening the called NPA and/or NXX on the basis of geographical bands selected by the Telephone Company) which is in accordance with that end user's service agreement with the customer, e.g., WATS. This option is provided in all Telephone Company electronic end offices and, where available, in electromechanical end offices in which WATS Access Line Service is provided. It is available with ATA-101XXXX and FGC and FGD and in (T) conjunction with a nonchargeable WATS Access Line Extension as set forth in 7.4.11 following.

(U) Hunt Group Arrangement for Use with WATS Access Line Service (T)

This option provides the ability to sequentially access one of two or more WATS Access Line Services (e.g., 800 Service access lines) in the terminating direction, when the hunting number of the WATS Access Line group is forwarded from the customer to the Telephone Company. This feature is provided in all Telephone Company end offices in which WATS Access Line Service is provided. It is available with Access Arrangements and FGA, FGB, (T) FGC and FGD. (T)

(V) LATA-Wide Terminating Access

This option is available in LATAs that have more than one Telephone Company tandem. LATA-wide terminating access allows the customer to route terminating traffic to a Telephone Company designated tandem for access to NXX (T) codes served by end offices that subtend Telephone Company tandems in the LATA. Terminating traffic outside of the Telephone Company designated entry tandem serving area (T) will be routed over common transport trunk groups to the tandem serving the called area for completion. Telephone Company designated tandems are: LATA 1- SNFCCA2143T, (T) LATA 2- RDNGCA0225T, LATA 5- LSANCA0470T, LATA 6- SNDGOCA0291T. It is available with ATA-950 and FGB.

(This page is filed under Transmittal No, 2059)

6. Switched Access Service (Cont'd)

6.3 Local Switching Optional Features and BSEs (Cont'd) (T)

6.3.1 Common Switching (Cont'd)

(W) Uniform Call Distribution Arrangement for Use with WATS Access Line Service (T)

This option provides a type of multiline hunting arrangement which provides for an even distribution of terminating calls among the available WATS Access Line Services in the hunt group. Where available, this feature is only provided in Telephone Company electronic end offices in which WATS Access Line Service is provided. It is available with Access Arrangements and FGA, FGB, FGC and FGD. (T)

(X) Nonhunting Number for Use with Hunt Group Arrangement or Uniform Call Distribution Arrangement for Use with WATS Access Line Service (T)

This option provides an arrangement for an individual WATS Access Line Service within a multiline hunt or uniform call distribution group that provides access to that WATS Access Line Service within the hunt or uniform call distribution group when it is idle or provides busy tone when it is busy when the nonhunting number is dialed. Where available, this feature is only provided in Telephone Company electronic end offices in which WATS Access Line Service is provided. It is available with Access Arrangements, FGA, FGB, FGC and FGD. (T)

6. Switched Access Service (Cont'd)

6.3 Local Switching Optional Features and BSEs (Cont'd) (T)

6.3.1 Common Switching (Cont'd)

(Y) Public Switched Digital Service Access (PSDS) (T)

This option allows for a connection between the customer's premises and a suitably equipped end user's premises utilizing end office switching capable of transmitting 56 Kbps digital data. In the originating direction, end users at suitably equipped end user premises can activate the capability in the end office switch by dialing #56 + 101XXXX + 7 or 10 digits or, when presubscribed to a participating interexchange carrier, #56 + 1 + 7 or 10 digits. In the terminating direction, the end office switch will signal the called party and place the terminal equipment in the digital mode. PSDS Access is available only with ATA-101XXXX and FGD and is only available in selectively equipped electronic end offices. This option is not available in combination with the CCSAC optional feature. Applicable rates can be found in 6.8.3 following. (T)

(Z) Calling Party Number (CPN) (T)

This option provides for the automatic transmission of the calling party's ten-digit telephone number to the customer's premises for calls originating in the LATA. The ten-digit telephone number consists of the NPA plus the seven-digit telephone number, which may or may not be the same as the calling station's charge number. The specific protocol for CPN is described in Pacific Bell Network Interface Specification Document PUB-L-780023-PB/NB and Bellcore Common Channel Signaling Network Specification Technical Reference TR-TSY-000905. This feature is available only with originating FGD and ATA-101XXXX when the CCSAC optional feature is specified.

(This page filed under Transmittal No. 2059)

6. Switched Access Service (Cont'd) (T)

6.3 Local Switching Optional Features and BSEs (Cont'd) (T)

6.3.1 Common Switching (Cont'd) (T)

(AA) Charge Number(CN) (T)

This option provides for the automatic transmission of the ten-digit billing number of the calling station and originating line information. The specific protocol for CN is described in PUB-L-780023-PB/NB and Technical (T) Reference TR-TSV-000905. This feature is available only with originating FGD and ATA-101XXXX when the CCSAC optional feature is specified. CN is the SS7 out of band signaling equivalent of ANI with multifrequency address signaling, as described in 6.3.1(F) preceding.

(AB) Carrier Selection Parameter (CSP) (T)

This option provides for the automatic transmission of a signaling indicator which signifies to the customer whether the call being processed originated from a presubscribed end user of that customer. The specific protocol for CSP is described in PUB-L-780023 PB/NB and Technical Reference (T) TR-TSV-000905. This feature is available only with originating FGD and ATA-101XXXX when the CCSAC optional feature is specified.

(AC) Hunt Group - C.O. Announcements (T)

This option provides a delay announcement feature for automatic routing of incoming calls to multiline hunt groups to one or more pre-recorded announcements when the call is not serviced within a preset time interval. This option is available with ALA only and is associated with Uniform Call Distribution (UCD) with Queuing Arrangement. Where available, this feature is provided in Telephone Company electronic end offices only.

(This page filed under Transmittal No. 2059)

ACCESS SERVICE

6. Switched Access Service (Cont'd)

6.3 Local Switching Optional Features and BSEs (Cont'd)

6.3.1 Common Switching (Cont'd)

(AD) Hunt Group - Overflow N

This option allows a call destined for the customer's hunt group to be routed to another telephone number within the same switching machine, but outside the hunt group. This option is available with ALA only and is associated with the Hunt Group Arrangement. Where available, this feature is provided in Telephone Company electronic end offices only.

(AE) Uniform Call Distribution (UCD) with Queuing

This option provides the capability for a UCD multiline hunt group to be equipped with the queuing feature. The queuing feature provides a means for automatically queuing a call to a multiline hunt group when all hunting group terminations are busy, the call is placed on queue and awaits its turn to be served. This option is available with ALA only and is associated with UCD Arrangement. Where available, this feature is provided in Telephone Company electronic end offices only.

(AF) Three Way Call Transfer

This option provides the customer who is on an established call with the ability to add another party to perform a three way conference. After establishing the conference, the customer may drop their connection without disconnecting the remaining two parties. This action allows the customer to transfer specific calls and free their line to initiate or receive another call. Charges between the originating locations and the ALA will be billed to the originating caller. The ALA transferring a call shall be responsible for the payment of all applicable charges including local, message unit, zone calling units, dial station toll and access arrangement usage charges. Where available, this feature is provided in Telephone Company electronic end offices only. This option is available with ALA only. N

6. Switched Access Service (Cont'd)

6.3 Local Switching Optional Features and BSEs (Cont'd) (T)

6.3.1 Common Switching (Cont'd)

(AG) Answer Supervision - Lineside BSE

Answer supervision - lineside provides the capability to deliver "off-hook" supervisory signals from the terminating central office switch to a lineside interface at the originating central office switch. These signals indicate when the called station has answered an incoming call. Answer supervision will only be provided where technically feasible at the Telephone Companies electronic offices and is available with ALA service.

(AH) Make Busy Key - BSE

Make busy key transfer provides the ability to create a busy or overflow condition for a multiline hunt group. This option allows a customer to busy out a predetermined group of individual DID trunks and ALAs. The capability is activated by a customer provided key at the customer's premises. The activation signal is transmitted to the Telephone Company's central office with the use of a Type 1 DNAL as specified in section 6.1.3.(4)(a) (T) preceding.

(This page filed under Transmittal No. 2059)

6. Switched Access Service (Cont'd)

6.3 Local Switching Optional Features and BSEs (Cont'd) (T)

6.3.1 Common Switching (Cont'd)

(AI) Forwarded Call Information BSE

Forwarded call information provides for the call status information of a call terminating on a ALA service with multiline hunt group arrangement. (T) This option provides the calling number, called number, the identification of the called multiline hunt group assigned to the customer's end user, and the call reason. In addition, the option provides the ability to activate or deactivate a message waiting indicator audible (stutter dial tone) or message waiting indicator visual (signal light indicator). The message waiting indicator audible or visual, may be activated as long as the service where the message waiting indicator is to be activated is equipped with the message waiting feature. The call status information is transmitted to the customer's premises and the signal to activate or deactivate the message waiting indicator is transmitted from the customer's message desk terminal equipment. The customer shall provide the appropriate customer premises equipment (CPE) to store, display or print out the transmitted call status information and the equipment to initiate the signal to activate or deactivate the message waiting indicator. This option is only available from appropriately equipped Telephone Company electronic end office switches. The forwarded call information is transmitted to the Telephone Company central office with the use of a Type 2 DNAL as specified in section 6.1.3.(4)(a) (T) preceding.

(This page filed under Transmittal No. 2059)

6. Switched Access Service (Cont'd)

6.3 Local Switching Optional Features and BSEs (Cont'd) (T)

6.3.1 Common Switching (Cont'd)

(AJ) Activate Message Waiting Indicator-Audible

Activate Message Waiting Indicator-Audible provides the ability to activate or deactivate a message waiting indicator audible (stutter dial tone) on a customer's enduser's service. The Message Waiting Indicator-Audible may be activated as long as the customer's end user's line is also provisioned with the message waiting indicator message waiting indicator is feature. The signal to activate or deactivate the transmitted from the customer's message desk terminal equipment. The customer shall provide the appropriate CPE to initiate the signal (T) to activate or deactivate the message waiting indicator. This option is only available from appropriately equipped Telephone Company electronic end office switches. The message waiting indicator is transmitted to the Telephone Company central office with the use of a Type 2 DNAL (T) as specified in Section 6.1.3(4)(a) preceding.

(This page filed under Transmittal No. 2059)

6. Switched Access Service (Cont'd)

6.3 Local Switching Optional Features and BSEs (Cont'd) (T)

6.3.1 Common Switching (Cont'd)

(AK) Activate Message Waiting Indicator-Visual

Activate Message Waiting Indicator-Visual provides the ability to activate or deactivate a lamp or LCD flash at 60 IPM on a customer's end user's service when there are messages waiting. The Message Waiting Indicator-Visual may be activated as long as the customer's end user's service is equipped with the message waiting indicator feature. The signal to activate or deactivate the message waiting indicator is transmitted from the customer's message desk terminal equipment. The customer shall provide the appropriate CPE to initiate the signal to activate or (T) deactivate the message waiting indicator. A customer's lamp or LCD is activated on their CPE when a signal is sent to the central office to apply 130 volts to the customer lamp. An additional signal would be sent after the messages have been retrieved to remove the 130 volts from the lamp. This option is only available from appropriately equipped Telephone Company electronic end office switches. The message waiting indicator is transmitted to the Telephone Company central office with the use of a Type 2 DNAL as specified in (T) 6.1.3(4)(a) preceding.

(AL) Access Transport Parameter (ATP)

This optional feature provides for the transmission of ISDN/SS7 call set up information from the originating switch to the customer's premises and, on terminating access, from the customer's premises to the terminating switch.

This optional feature is available only with FGD with CCSAC where technical capabilities exist. The specific protocol for ATP is as specified in Technical Reference TR-TSV-000962.

(This page filed under Transmittal No. 2059)

ACCESS SERVICE

6. Switched Access Service (Cont'd)

6.3 Local Switching Optional Features and BSEs (Cont'd) (T)

6.3.1 Common Switching (Cont'd)

(AM) Calling Number Delivery via ICLID

This Option provides for the automatic transmission of the calling party's ten-digit telephone number to the customer's premises via the Basic Serving Element (BSE) feature Individual Calling Line Identification (ICLID). This feature is available only with the ALA. The ten-digit telephone number consists of the NPA plus the seven-digit telephone number which may or may not be the same as the calling station's charge number. Calling parties will have the ability to block the sending of their telephone numbers. If the calling party chooses to block delivery of their telephone number, the number will not be sent from the terminating end-office to the customer's premises. Calling party telephone numbers may not be delivered to the customers end office on all calls. When the calling party number is not delivered to the end office, the calling number will not be delivered to the customer. (T)

(This page filed under Transmittal No. 2059)

6. Switched Access Service (Cont'd)

6.3 Local Switching Optional Features and BSEs (Cont'd)

6.3.2 Transport Termination

(A) Rotary-Dial Station Signaling

This option provides for the transmission of called party address signaling from rotary dial stations to the customer's premises for originating calls. This option is provided in the form of a specific type of Transport Termination. It is available with ATA-950 and FGB, only on a directly trunked basis. (T)

(B) Operator Trunk - Modified Operator Services (MOS) - Coin, Non-Coin, or Combined Coin and Non-Coin

This option may be ordered to provide coin, non-coin, or combined coin and non-coin operation. It is available with ATA-101XXXX, FGC and FGD and is provided in electronic end offices and other Telephone Company end offices where equipment is available. It is provided as a trunk type of Transport Termination. (T)

Coin:

This arrangement provides for initial coin return control and routing of 0+, 0-, 1+, 01+, or 011+ prefixed originating coin calls requiring operator assistance to the customer's premises. Because operator assisted coin calling traffic is routed over a trunk group dedicated to operator assisted calls, this arrangement is only provided in association with the Service Class Routing option.

(This page filed under Transmittal No. 2059)

6. Switched Access Service (Cont'd)

6.3 Local Switching Optional Features and BSEs (Cont'd) C

6.3.2 Transport Termination (Cont'd)

(B) Operator Trunks - Modified Operator Services (MOS) - Coin, Non-Coin, or Combined Coin and Non-Coin (Cont'd)

Coin: (Cont'd)

The operator assistance coin calling arrangement is also normally ordered by the customer in conjunction with the ANI optional feature, the trunk groups equipped with this arrangement will be terminated at the customer's specified location.

Non-Coin:

This arrangement provides for the routing of 0+, 0-, 1+, 01+ or 011+ prefixed originating non-coin calls requiring operator assistance to the customer's premises. Because operator assisted non-coin calling traffic is routed over a trunk group dedicated to operator assisted calls, this arrangement is only provided in association with the Service Class Routing option.

The operator assistance non-coin calling arrangement is also normally ordered by the customer in conjunction with the ANI optional feature, the trunk groups equipped with this arrangement will be terminated at the customer's specified location. When so equipped, the ANI feature provides for the forwarding of information digits which identify that the call has originated from a hotel or motel, and whether room number identification is required,or that special screening is required, e.g., for coinless public stations, dormitory or inmate stations, or other screening arrangements agreed to between the customer and the Telephone Company.

6. Switched Access Service (Cont'd)

6.3 Local Switching Optional Features and BSEs (Cont'd) C

6.3.2 Transport Termination (Cont'd)

(B) Operator Trunks - Modified Operator Services (MOS) - Coin, Non-Coin, or Combined Coin and Non-Coin (Cont'd)

Combined Coin and Non-Coin:

This arrangement provides for initial coin return control and routing of 0+, 0-, 1+, 01+ or 011+ prefixed originating operator-assisted coin and non-coin calls requiring operator assistance to the customer's premises. Because operator-assisted coin and non-coin-calling traffic is routed over a trunk group dedicated to operator assisted calls, this arrangement is only provided in association with the Service Class Routing option.

This arrangement is normally ordered by the customer in conjunction with the ANI optional feature, the trunk groups equipped with this arrangement will be terminated at the customer's specified location. When so equipped, the ANI optional feature provides for the forwarding of information digits which identify that the call has originated from a hotel or motel, and whether room-number identification is required, or that special screening is required, e.g., for coinless pay telephone stations, dormitory or inmate stations, or other screening arrangements agreed to between the customer and the Telephone Company.

This option provides the operator functions available in the end office to the customer's specified location. These functions are (1) Operator Release, (2) Operator Attached, (3) Coin Collect, (4) Coin Return, and(5) Ringback. It is available from the Telephone Company's equal access end office to the customer's specified location. This option is not available in combination with the CCSAC optional feature.

6. Switched Access Service (Cont'd)

6.3 Local Switching Optional Features and BSEs (Cont'd)

6.3.2 Transport Termination (Cont'd)

(C) Operator Trunk - Exchange Access Operator Services System (EAOSS)

This option provides the operator functions available in the end office to the customer. These functions are (1) Operator Released, (2) Operator Attached, (3) Coin Collect, (4) Coin Return, and (5) Ringback. It is available with ATA-101XXXX and FGD and is provided as a trunk type of Transport Termination from the Telephone Company's coin tandem or direct from the equal access end office to the customer's specified location, where technically feasible. (T)

(This page filed under Transmittal No. 2059)

6. Switched Access Service (Cont'd)

6.3 Local Switching Optional Features and BSEs (Cont'd) C

6.3.3. WATS Access Line Termination

The WATS Access Line Terminations are differentiated by line side vs. trunk side terminations. The standard WATS Access Line Arrangement is available with a line side termination. There are various types of originating, terminating and two way line side terminations depending on the type of signaling associated with the WATS Access Line. (i.e., loop start or ground start). Line side terminations are available with either dial pulse or dual tone multifrequency address signaling.

Available nonchargeable line side and trunk side terminations can be found in Technical Reference TR-NPL-000334.

In addition, there are also various types of originating, terminating and two way WATS Access Line trunk side terminations that are available in lieu of standard line side terminations. Trunk side terminations are provided only in association with digital (i.e., DS1) WATS Access Line Service or with certain Line Termination optional features as specified following:

(A) Line Termination Optional Features for Trunk-Side Connections

The Telephone Company will, at the option of the customer, provide the following line termination optional features in association with WATS Access Line Service.

(1) E&M Supervisory Signaling

The E&M Supervisory Signaling optional feature, which is available with four-wire originating and terminating WATS Access Lines, provides for E&M Type 1, Type 2 or Type 3 Supervisory Signaling in lieu of loop start or ground start Supervisory Signaling.

6. Switched Access Service (Cont'd)

6.3 Local Switching Optional Features and BSEs (Cont'd) C

6.3.3. WATS Access Line Termination (Cont'd)

(2) Dialed Number Identification Service (DNIS)

The Dialed Number Identification Service optional feature, which is available with terminating only WATS Access Lines, permits a customer's End User with multiple 800 Service telephone numbers in the same service group to identify the specific 800 number which was dialed by the calling party. Four digits which identify the dialed 800 number are outpulsed to the customer premise equipment at the end user premises. The digits are outpulsed over the WATS Access Lines. All WATS Access Lines in the same service group must be equipped for DNIS. For each dialable 800 number there must be at least one WATS Access Line in the service group. DNIS is provided with reverse battery type supervisory signaling.

ACCESS SERVICE

6. Switched Access Service (Cont'd)

6.4 Transmission Specifications

Each Switched Access Service transmission path is provided with standard transmission specifications. There are three different standard specifications (Types A, B and C). The standard for a particular transmission path is dependent on the Feature Group or Access Arrangements, the Interface Group and whether the service is directly routed or via an access tandem. The available transmission specifications are set forth in Technical References TR-NPL-000334 and Pacific Bell's Appendix to TR-NWT-000334, PUB L-786250. Acceptance limits, maintenance limits and immediate action limits are provided by either Technical References TR-NWT-000334 or PUB L-786250. Where conflicts are encountered, the Telephone Company's standards apply. Where limits are specific to a particular facility, those limits apply to those facilities available and assigned to the customer for Access Service. Data Transmission Parameters are also provided with each Switched Access Service transmission path. The Telephone Company will, upon notification by the customer that the data parameters set forth in Technical References TR-NWT-000334 and PUB L-786250 are not being met, conduct tests independently or in cooperation with the customer, and take any necessary action to insure that the parameters are met.

The Telephone Company will maintain existing transmission specifications on functioning service configurations installed prior to the effective date of this tariff except that service configurations having performance specifications exceeding the standards listed in this provision will be maintained at performance levels specified in this tariff.

Transmission specifications for SS7 Signaling Connections are set forth in PUB-L-780023-PB/NB and Technical Reference TR-TSY-000905. (T)

Transmission specifications for FGD with the 64 CCC optional feature are set forth in Technical Reference TR-NWT-000938.

(This page filed under Transmittal No. 2059)

ACCESS SERVICE

6. Switched Access Service (Cont'd)

6.4 Transmission Specifications (Cont'd) (T)

6.4.1 D

(A)

(6)

(B)

(1)

(2)

D

ACCESS SERVICE

6. Switched Access Service (Cont'd)

6.4 Transmission Specifications (Cont'd)

6.4.1 D

(B)

(3)

(4)

D

D

D

6. Switched Access Service (Cont'd)

6.4 Transmission Specifications (Cont'd)

6.4.1 D

(B)

(5)

D

6. Switched Access Service (Cont'd)

6.4 Transmission Specifications (Cont'd)

6.4.1 D

(B)

(6)

(C)

(1)

(2)

(3)

D

6. Switched Access Service (Cont'd)

6.4 Transmission Specifications (Cont'd)

6.4.1 D

(C)

(3)

D

D

D

ACCESS SERVICE

6. Switched Access Service (Cont'd)

6.4 Transmission Specifications (Cont'd)

6.4.1 D

(C)

(4)

(5)

(D)

(1)

(a)

D

6. Switched Access Service (Cont'd)

6.4 Transmission Specifications (Cont'd)

6.4.1 D

(D)

(1)

(b)

(c)

(d)

(2)

(a)

D

6. Switched Access Service (Cont'd)

6.4 Transmission Specifications (Cont'd)

6.4.1 D

(D)

(2)

(b)

(c)

(d)

D

6. Switched Access Service (Cont'd)

6.4 Transmission Specifications (Cont'd)

6.4.2 D

(A)

(1)

(2)

(3)

(4)

D

ACCESS SERVICE

6. Switched Access Service (Cont'd)

6.4 Transmission Specifications (Cont'd)

6.4.2 D

(A)

(5)

(6)

(B)

(1)

(2)

(3)

D

ACCESS SERVICE

6. Switched Access Service (Cont'd)

6.4 Transmission Specifications (Cont'd)

6.4.2 D

(B)

(4)

(5)

(6)

D

ACCESS SERVICE

6. Switched Access Service (Cont'd)

6.4 Transmission Specifications (Cont'd)

6.4.2 D

(C)

(1)

(2)

(3)

(4)

(5)

(6)

D

ACCESS SERVICE

6. Switched Access Service (Cont'd)

6.4 Transmission Specifications (Cont'd)

6.4.3 D

(A)

(1)

(2)

(3)

(4)

D

6. Switched Access Service (Cont'd)

6.5 Obligations of the Telephone Company

In addition to the obligations of the Telephone Company set forth in 2. preceding, the Telephone Company has certain other obligations pertaining only to the provision of Switched Access Service. These obligations are as follows:

6.5.1 Network Management

The Telephone Company will administer its network to insure the provision of acceptable service levels to all telecommunications users of the Telephone Company's network services. Generally, service levels are considered acceptable only when both end users and customers are able to establish connections with little or no delay encountered within the Telephone Company network. The Telephone Company maintains the right to apply protective controls, i.e., those actions, such as call gapping, which selectively restrict the completion of traffic, over any traffic carried over its network, including that associated with a customer's Switched Access Service. Generally, such protective measures would only be to minimize the impact of occurrences such as failure or overload of Telephone Company or customer facilities, natural disasters, mass calling or national security demands. In the event that the protective controls applied by the Telephone Company result in the complete loss of service by the customer, the customer will be granted a Credit Allowance for Service Interruption as set forth in 2.4.4.(B)(3) preceding.

The Telephone Company SS7 signaling network will provide management functions as described in detail in PUB-L-780023-PB/NB (T)
and Technical Reference TR-TSV-000905. (T)

(This page filed under Transmittal No. 2059)

6. Switched Access Service (Cont'd)

6.5 Obligations of the Telephone Company (Cont'd)

6.5.2 Operator Transfer Service

Upon customer request, the Telephone Company will provide a list identifying Operator Services Systems locations for use with Operator Transfer Service as specified in 6.1.3(A)(6)(a) preceding. Additionally, the Telephone Company will define the service areas of its Operator Service System and will identify the signaling capability of end offices in the serving area. Sx

x Issued on not less than 2 days' notice under authority of Special Permission No. 93-992 of the Federal Communications Commission to defer the effective date from December 1, 1993 to December 30, 1993.

6. Switched Access Service (Cont'd)

6.5 Obligations of the Telephone Company (Cont'd)

6.5.3 Trunk Group Measurements Report

Subject to availability, the Telephone Company will make available trunk group data in the form of usage in Hundred Call Seconds (CCS), peg count and overflow, and will provide it to the customer at agreed to intervals. (T) (T)

Upon specific customer requests for reports other than those on previously agreed to intervals where manual processes are required to provide the trunk group data, charges as set forth in 13.3.9 (National Traffic Data Special Requests) following are applicable. (T)

(This page filed under Transmittal No. 2059)

ACCESS SERVICE

6. Switched Access Service (Cont'd)

6.5 Obligations of the Telephone Company (Cont'd)

6.5.4

6.5.5.

6.5.6 Design Blocking Probability

The Telephone Company will cooperate in the design of the number of the facilities used in the provision of Switched Access Service. The Telephone Company will monitor the facilities used in the provision of Switched Access Service to meet the blocking probability criteria as set forth in (A) through (F) following. Sx

x Issued on not less than 2 days' notice under authority of Special Permission No. 93-992 of the Federal Communications Commission to defer the effective date from December 1, 1993 to December 30, 1993.

6. Switched Access Service (Cont'd)

6.5 Obligations of the Telephone Company (Cont'd)

6.5.6 Design Blocking Probability (Cont'd)

(A) For ALA, FGA and FGB, no design blocking criteria apply. (T)

(B) For FGC the design blocking objective will be no greater than one percent (.01) between the point of termination at the customer's premises and the first point of switching when traffic is directly routed without an alternate route. Standard traffic engineering methods will be used by the Telephone Company to determine the number of transmission paths required to achieve this level of blocking. (T)

(C) For ATA-101XXXX and FGD, the design blocking objective for the final group will be no greater than one percent (.01) between the point of termination at the customer's premises and the end office switch, whether the traffic is directly routed without an alternate route or routed via an access tandem. Standard traffic engineering methods as set forth in PUB TR EOP-000178 Trunk Traffic Engineering Concepts and Applications (Chapters 6-7) will be used by the Telephone Company to determine the number of transmission paths required to achieve this level of blocking. (T)

(D) For Entrance Facilities no design blocking criteria apply. For Direct Trunked Transport used in provision of ALA, ATA-950, FGA and FGB, no design blocking criteria apply. (T) For Direct Trunked transport used in provision of ATA-101XXXX, FGC and FGD, the design blocking objective is the same as for the ATA-101XXXX, FGC or FGD using the facility. (T) For Tandem Switched Facility, the design blocking objective is the same as for the ALA, ATA or Feature Groups using the facility. (T)

(This page filed under Transmittal No. 2059)

6. Switched Access Service (Cont'd)

6.5 Obligations of the Telephone Company (Cont'd)

6.5.6 Design Blocking Probability (Cont'd)

(E) The design blocking criteria for 500, 800 or 900 Access Service provided from an end office not equipped with equal access capabilities will be equivalent to that set forth preceding for FGC except when more than one tandem is employed in the transport of a 500, 800 or 900 Access Service call. The design blocking criteria for 500, 800 or 900 Access Service provided from an end office equipped with equal access capabilities will be equivalent to that set forth preceding for ATA-101XXXX and FGD except when more than one tandem is employed in the transport of an 800 Access Service call. For 900 Access Service, where trunk access limitation as set forth in 6.3.1(P) is applicable design blocking criteria does not apply. (T) (T)

(F) The Telephone Company will perform routine measurement functions for the capacity ordered, to assure that an adequate number of transmission paths are in service. The Telephone Company will recommend that additional capacity (i.e., trunks) be ordered by the customer when additional paths are required to reduce the measured blocking level. For FGC, ATA-101XXXX or FGD capacity ordered, the design blocking objective is assumed to have been met if the routine measurements show that the measured blocking does not exceed the threshold listed in the following tables. (T)

(1) For transmission paths carrying only first routed traffic directly between an end office and customer's premises without an alternate route, and for paths carrying only overflow traffic, the measured blocking thresholds are as follows:

(This page filed under Transmittal No. 2059)

ACCESS SERVICE

6. Switched Access Service (Cont'd)

6.5 Obligations of the Telephone Company (Cont'd)

6.5.6 Design Blocking Probability (Cont'd)

(F) (Cont'd) Sx

(1) (Cont'd)

Engineering Objective = 1% Blocking (.010)
Measured Blocking Thresholds
in the Time Consistent Busy Hour

Number of Transmission Paths Per Trunk Group	Per Trunk Group			
	15-20 Days of Valid Data	11-14 Days of Valid Data	7-10 Days of Valid Date	3-6 Days of Valid Data
2	.070	.080	.090	.140
3	.050	.060	.070	.090
4	.050	.060	.070	.080
5-6	.040	.050	.060	.070
7 or more	.030	.035	.040	.060

(2) For transmission paths carrying first-routed traffic between an end office and an access tandem or between an access tandem and customer's premises, the measured blocking thresholds are as follows:

Engineering Objective = .5% Blocking (.005)
Measured Blocking Thresholds
in the Time Consistent Busy Hour

Number of Transmission Paths Per Trunk Group	Per Trunk Group			
	15-20 Days of Valid Data	11-14 Days of Valid Date	7-10 Days of Valid Data	3-6 Days of Valid Data
2	.045	.055	.060	.095
3	.035	.040	.045	.060
4	.035	.040	.045	.055
5-6	.025	.035	.040	.045
7 or more	.020	.025	.030	.040

x Issued on not less than 2 days' notice under authority of Special Permission No. 93-992 of the Federal Communications Commission to defer the effective date from December 1, 1993 to December 30, 1993.

ACCESS SERVICE

6. Switched Access Service (Cont'd)

6.5 Obligations of the Telephone Company (Cont'd)

6.5.7 Provision of Service Performance Data (N)

Subject to availability, end-to-end service performance data available to the Telephone Company through its own service evaluation routines, may also be made available to the customer based on previously arranged intervals and format. These data provide information on overall end-to-end call completion and non-completion performance, e.g., customer equipment blockage, failure results and transmission performance. These data do not include service performance data which are provided under other tariff sections, e.g., testing service results. If data are to be provided in other than paper format, the charges for such exchange will be determined on an individual case basis. (N)

6. Switched Access Service (Cont'd)

6.6 Obligations of the Customer

In addition to the obligations of the customer set forth in 2. preceding, the customer has certain specific obligations pertaining to the use of Switched Access Service. These obligations are as follows:

6.6.1 Report Requirements

Customers are responsible for providing the following reports to the Telephone Company, when applicable.

(A) Jurisdictional Reports

When a customer orders Switched Access Service for both interstate and intrastate use, the customer is responsible for providing reports as set forth in 2.3.14 (Jurisdictional (T)
Report Requirements) preceding. Charges will be apportioned (T)
in accordance with those reports. The method to be used for determining the interstate charges is set forth in 2.3.15 (Determination of Interstate and Intrastate Access Service) (T)
preceding.

(B) Code Screening Reports

When a customer orders service class routing, trunk access limitation or call gapping arrangements, it must report the number of trunks and/or the appropriate codes to be instituted in each end office or access tandem switch, for each of the arrangements ordered.

(C) 900 Access Service Code Reports

When ordering 900 Access Service, the customer must report the appropriate NXX Codes to be instituted. The Telephone Company will activate code identification at all offices where capability is available. The report must be updated by the customer each time a change is scheduled to occur, i.e., when a new code is to be added or an existing code is to be deleted. Such reports shall be provided according to negotiated service intervals in order to allow the Telephone Company sufficient time to implement the change.

(This page filed under Transmittal No. 2059)

6. Switched Access Service (Cont'd)

6.6 Obligations of the Customer (Cont'd)

6.6.1 Report Requirements (Cont'd)

(D) Substantial Call Volume 900 Services

When a customer offers services for which a substantial call volume is expected during a short period of time (e.g. media stimulated events) the customer must notify the Telephone Company at least 24 hours in advance of each peak period. For events scheduled during weekends or holidays, the Telephone Company must be notified no later than 5:00 p.m. local time the prior business day. Notification should include the nature, time, duration and frequency of the event, an estimated call volume, and the 900 NXX line number(s) to be used.

On the basis of the information provided, the Telephone Company will work cooperatively with the customer to implement network management controls if required to reduce the probability of excessive network congestion. The Telephone Company will also work cooperatively with the customer to determine the appropriate level of such control.

Failure to provide prescribed notification may result in customer caused network congestion, which could result in discontinuation of service under 2.1.8 (T)
(Refusal and Discontinuance of Service) and/or (T)
damages under 2.1.3 (Liability). (T)

6.6.2 Supervisory Signaling

The customer facilities shall provide the necessary on-hook, off-hook answer and disconnect supervision.

(This page filed under Transmittal No. 2059)

6. Switched Access Service (Cont'd)

6.6 Obligations of the Customer (Cont'd)

6.6.3 CCSAC Measurement Data

The customer must provide the Telephone Company with the types of utilization, screening results and maintenance that are being made on SS7 Signaling Connections. The above information must be shared with the Telephone Company on an ongoing basis in order to provide capacity to transport and process interconnecting traffic. Requirements are described in PUB-L-780023-PB/NB. (T)

6.6.4 Trunk Group Measurements Reports

With the agreement of the customer, trunk group data in the form of usage in CCS, peg count and overflow for its end of ll access trunk groups, where technologically feasible, will be made available to the Telephone Company. These data will be used to monitor trunk group utilization and service performance and will be based on previously arranged intervals and format.

6.6.5 Design of Switched Access Services

When a customer orders Switched Access Service, it is the customer's responsibility to assure that sufficient access services have been ordered to handle its traffic.

(This page filed under Transmittal No. 2059)

6. Switched Access Service (Cont'd)

6.7 Rate Regulations

This section contains the specific regulations governing the rates and charges that apply for Switched Access Service.

6.7.1 Description and Application of Rates and Charges

There are three types of rates and charges that apply to Switched Access Service. These are monthly recurring rates (including fixed and per mile rates), usage rates (including fixed and per mile rates) and nonrecurring charges. These rates and charges are applied differently to the various rate elements, as set forth in (C), (D) and (E) following.

(A) Monthly Rates

Monthly rates (including fixed and per mile rates) are flat recurring rates that apply each month or fraction thereof that a specific rate element is provided. For billing purposes, each month is considered to have 30 days.

(B) Usage Rates

Usage rates (for each line or trunk) are rates that apply (T)
on a per unit basis (e.g. per call, per access minute or (T)
per minute per mile) when a specific rate element is used. (T)
Usage charges are accumulated over a monthly period.

(This page filed under Transmittal No. 2059)

6. Switched Access Service (Cont'd)

6.7 Rate Regulations (Cont'd)

6.7.1 Description and Application of Rates and Charges (Cont'd)

(C) Nonrecurring Charges

Nonrecurring charges are one time charges that apply for a specific work activity (i.e., installation or change to an existing service). The types of nonrecurring charges that apply for Switched Access Service are: installation of service, and service rearrangements.

(1) Installation of Service

Nonrecurring charges apply to each Switched Access service installed and will include charges for Entrance Facility and lines or trunks that traverse Direct Trunked Transport and Tandem Switched Transport. In addition, nonrecurring charges apply when an SS7 signaling Connection is installed for use with FGD or ATA-101XXXX with the CCSAC optional feature or for LIDB Service. (T)

(a) For an Entrance Facility which is ordered on a per transport channel basis, the charge is applied per transport channel.

(b) For Switched Access lines or trunks which traverse Direct Trunked Transport or Tandem Switched Transport, the nonrecurring charge is applied per transport channel transmission path.

For other optional features or Basic Service Elements (BSEs), a nonrecurring charge applies per arrangement as shown in 6.8 following. (T)

(This page filed under Transmittal No. 2059)

6. Switched Access Service (Cont'd)

6.7 Rate Regulations (Cont'd)

6.7.1 Description and Application of Rates and Charges (Cont'd)

(C) Nonrecurring Charges (Cont'd)

(1) Installation of Service (Cont'd)

Certain Switched Access Services have a first and additional nonrecurring charge rate structure that will be treated as follows: When multiple identical services (i.e., services between the same locations and for the same customer) are ordered and installed, moved or rearranged at the same time, there is a charge for the first service installed and a lower charge for each additional identical service installed. (T)

The services for which first and additional nonrecurring charges apply and their rates are shown in 6.8 following.

(2) Service Rearrangements

Changes which are considered to be service rearrangements are as set forth in 5.2.8 (Service Rearrangements) preceding. (T) (T)

Administrative changes will be made without charge except as set forth in 5.2.8(Services Rearrangements) preceding. (T)

- If the change involves the addition of or a modification to an optional feature which has a separate nonrecurring charge, that nonrecurring charge will apply.
- On existing Switched Access trunks, for a change of Switched Access signaling type from multifrequency address signaling to SS7 out of band signaling, i.e., the CCSAC optional feature, no charge will apply, provided there is no change in the physical serving arrangement. When the CCSAC optional feature is specified, the customer may add Calling Party Number (CPN), Charge Number (CN), Carrier Selection Parameter (CSP) and Access Transport Parameter (ATP) at no charge if these optional features are specified at the same time the CCSAC optional feature is ordered.

(This page filed under Transmittal No. 2059)

6. Switched Access Service (Cont'd)

6.7 Rate Regulations (Cont'd)

6.7.1 Description and Application of Rates and Charges (Cont'd)

(C) Nonrecurring Charges (Cont'd)

(2) Service Rearrangements (Cont'd)

For all other Switched Access changes, including the addition of, or modifications to, optional features without separate nonrecurring charges, a charge equal to one half the Switched Transport nonrecurring (i.e., installation) charge will apply. When an optional feature is not required on each transport channel, but rather for an entire transport channel group, an end office or an access tandem switch, only one such charge will apply (i.e., it will not apply per transport channel).

For customers requesting the addition of the optional ANI feature on any form of 950-XXXX (T)
dialing patterns, whether FGB or FGD access (T)
(multifrequency or CCSAC signaling) -- no charge (T)
will apply to changes received by the Telephone (T)
Company up to September 30, 1995.

(This page filed under Transmittal No. 2059)

(T)
(D)

ACCESS SERVICE

6. Switched Access Service (Cont'd)

6.7 Rate Regulations (Cont'd)

(D)

(D)

(This page filed under Transmittal No. 2020)

ACCESS SERVICE

6. Switched Access Service (Cont'd)

6.7 Rate Regulations (Cont'd)

6.7.1 Description and Application of Rates and Charges (Cont'd)

(D) Application of Rates

Switched Transport, Local Switching, and the Information Surcharge rates are applied either as premium rates or non-premium rates. (T)

The specific application of these premium or non-premium rates is dependent upon the type of service and the availability of equal access capabilities in the end office to which the service is provided. (T)

The following rules provide the basis for applying the premium or non-premium rates:

(1) Premium rates apply to all FGC, ATA-101XXXX and FGD access minutes. Premium rates also apply to all ALA, FGA, FGB, ATA-950, 500 and all Toll Free Access Service access minutes that originate from or terminate at end offices equipped with equal access (i.e., ATA-101XXXX and FGD) capabilities, and to all access minutes that originate from or terminate at end offices not equipped with equal access capabilities when the service is provided to customers which furnish interstate MTS/WATS, e.g. AT&T. (T)

(2) Non-premium rates which are applicable only for customers which do not furnish interstate MTS/WATS, apply to all ALA, FGA, FGB, ATA-950 and Toll Free Access Service access minutes (measured or assumed) that originate from or terminate at end offices not equipped with equal access capabilities.

Customers ordering ALA chargeable optional features will be billed at the non-premium rate if the ALA dial tone originating end office is not equipped with equal access capabilities.

(This page filed under Transmittal No. 2059)

6. Switched Access Service (Cont'd)

6.7 Rate Regulations (Cont'd)

6.7.1 Description and Application of Rates and Charges (Cont'd)

(D) Application of Rates to Rate Elements (Cont'd)

The following paragraphs set forth the Switched Access Service rate elements and how the rates are applied to the elements. (T)

(1) Entrance Facilities

The Entrance Facility includes the charge for transport from a customer's servicne wire center to the customer's premises. The rate is applied for a Voice Grade, DS1 and DS3 Transport Channel on a point of termination per month basis. The rate as set forth in 6.8.2(A) following applies for the selection Transport Channel per point of termination even if all the transmission paths on the selected Transport Channel are not activated. The DS3 Entrance Facility requires DS3 to DS1 multiplexing as set forth in 6.8.2(I)(2) following. Additionally, a DS1 to DS0/VG multiplexing chargeable optional feature is available as set forth in 6.8.2(I)(2) following.

(2) Direct Trunked Transport (T)

Direct Trunked Transport includes the charge for transport from a customer's serving wire center to an end office for switching of a customer's originating and terminating traffic, a hub location for multiplexing or an access tandem for interconnection to Tandem Switched (T) Transport to an end office(s). The rates are applied for a Voice Grade, DS1 and DS3 Transport Channel on a per month fixed and per month per mile basis. The mileage between the end office, hub or access tandem involved and the customer's serving wire center is determined as set forth in 6.17.13 following. The rates as set forth in 6.8.2(B) following apply for the selected Transport Channel even if all the transmission paths on the selected Transport Channel are not activated. DS3 Direct Trunked Transport requires DS3 to Ds1 multiplexing as set forth in 6.8.2(I)(2) following. Additionally, a DS1 to DS0/VG multiplexing chargeable optional feature is available as set forth in 6.8.2(I)(2) following.

(This page filed under Transmittal No. 2059)

ACCESS SERVICE

6. Switched Access Service (Cont'd)

6.7 Rate Regulations (Cont'd)

6.7.1 Description and Application of Rates and Charges (Cont'd)

(D) Application of Rates to Rate Elements (Cont'd)

(3) Tandem Switched Transport

Tandem Switched Transport includes charges for transport from end offices to the access tandem and for Tandem Switching at the access tandem. (C)

(a) Tandem Switched Transport rates are applied on a per minute of use fixed and per minute of use per mile basis. The chargeable minutes of use for determining the charges are the minutes that are carried over the involved Tandem Switched Transport facilities. The mileage between the end office involved and the customer's serving wire center or access tandem is determined as set forth in 6.17.13 following. The rates are as set forth in 6.8.2(C) following.

(D)
|
(D)

(b) Tandem Switching rates are applied on a per minute of use basis. The chargeable minutes of use for determining the charges are the minutes that are carried over the involved Tandem Switched Transport facilities. The chargeable minutes are determined as set forth in 6.7.8 following. The rates are as set forth in 6.8.2(C) following.

Rates contained in this transmittal are subject to subsequent adjustment, effective retrospectively back to the transmittal's original effective date, in the event the Commission or a court subsequently authorizes Pacific to correct its rates to allow it to calculate its price cap formulas to exclude USF contributions from the operation of the X-factor, or in the event of any other adjustment pursuant to an order of the Commission or a court.

(This page filed under Transmittal No. 1988)

6. Switched Access Service (Cont'd)

6.7 Rate Regulations (Cont'd)

6.7.1 Description and Application of Rates and Charges (Cont'd)

(D) Application of Rates to Rate Elements (Cont'd)

(3) Tandem Switched Transport (Cont'd)

(c) Host Remote Transmission

A per access minute of use and a per access minute of use per mile rate applies between the Host and the remote for the common use of all customers between a host office and the remote switching system or remote switching module where the call originates or terminates. (C) (C)

(D) (D)

Mileage is always measured separately from Tandem Switched Transmission and Direct Trunked Transport. (T) (T)

Mileage measurement is described in 6.7.13 (Determining Switched Transport Mileage and Charges).

(This page filed under Transmittal No. 2059)

ACCESS SERVICE

6. Switched Access Service (Cont'd)

6.7 Rate Regulations (Cont'd)

6.7.1 Description and Application of Rates and Charges (Cont'd)

(D) Application of Rates to Rate Elements (Cont'd)

(D)

(D)

(This page filed under Transmittal No. 2059)

ACCESS SERVICE

6. Switched Access Service (Cont'd)

6.7 Rate Regulations (Cont'd)

6.7.1 Description and Application of Rates and Charges (Cont'd)

(D) Application of Rates to Rate Elements (Cont'd)

(D)

(D)

(This page filed under Transmittal No. 2059)

6. Switched Access Service (Cont'd)

6.7 Rate Regulations (Cont'd)

6.7.1 Description and Application of Rates and Charges (Cont'd)

(D) Application of Rates to Rate Elements (Cont'd)

(5) Multiplexing

The Multiplexing rate applies when an Entrance Facility or Direct Trunked Transport is multiplexed at a (T)
Telephone Company hub to a lower capacity (i.e., DS3 to DS1 or DS1 to DS0/VG). DS3 to DS1 multiplexing is required on a DS3 Entrance Facility or Direct Trunked Transport. The Multiplexing rate is applied on a per (T)
multiplexing arrangement basis. The rate as set forth (T)
in 6.8.2(E) following applies for the selected multiplexing arrangement even if all the multiplexing (T)
ports for the selected multiplexing arrangement are (T)
not activated.

(This page filed under Transmittal No. 2059)

6. Switched Access Service (Cont'd)

6.7 Rate Regulations (Cont'd)

6.7.1 Description and Application of Rates and Charges (Cont'd)

(D) Application of Rates to Rate Elements (Cont'd)

(6) Local Switching

Local Switching includes usage charges and optional features charges. Local Switching usages rates are applied on a per minute of use basis. Premium and non premium rates apply. Local Switching minutes are as set forth in (E) following. The chargeable minutes are determined as set forth in 6.7.8 following. The rates are as set forth in 6.8.3 and 6.8.5 following.

Local Switching optional feature rates are applied on a per month and a per minute of use basis as set forth in 6.8.3 and 6.8.5 following.

(a) Dedicated End Office Port Sx

The Dedicated End Office Port provides for each dedicated line or trunk terminating in the end office port.

A monthly rate applies, per line or per trunk for each in service dedicated line or trunk terminating in the end office port. C

(b) Shared End Office Trunk Port

The Shared End Office Trunk Port rate element provides for the use of the shared end office trunk ports for termination of common transport trunk for tandem routed traffic.

A per minute of use charge applies to the shared end office trunk ports for termination of common transport trunks for tandem routed traffic. Sx

x Reissued material became effective January 1, 1998.
Revised material is filed under authority of Special Permission No. 98-008 of the F.C.C. See Supplement No. 103.
(This page filed under Transmittal No. 1966.)

ACCESS SERVICE

6. Switched Access Service (Cont'd)

6.7 Rate Regulations (Cont'd)

6.7.1 Description and Application of Rates and Charges (Cont'd)

(D) Application of Rates to Rate Elements (Cont'd)

(7) Information Surcharge Mx

Information Surcharge rates are applied on a per minute of use basis. Premium and non premium rates apply. The Information Surcharge minutes are as set forth in (E) following. The chargeable minutes are determined as set forth in 6.7.8 following. The rates are as set forth in 6.8.8 following. Mx

x Filed in compliance with FCC Orders DA 97-2358 and FCC 97-158, as amended.
Certain regulations on this page formerly appeared on page 212.1.4.
(This page filed under Transmittal No. 1959.)

6. Switched Access Service (Cont'd)

6.7 Rate Regulations (Cont'd)

6.7.1 Description and Application of Rates and Charges (Cont'd)

(D) Application of Rates to Rate Elements (Cont'd)

(8) Tandem Switched Transport provided over Direct Trunked Transport DS1 and DS3 Transport Channels S x

When Tandem Switched Transport is provided over Direct Trunked Transport DS1 and/or DS3 Transport Channels, the Direct Trunked Transport rates will be adjusted and the Tandem Switched Transport will be billed the per minute of use fixed and per minute of use per mile rates for all chargeable minutes as set forth in (3) preceding.

The Direct Trunked Transport transport channel per month fixed and per month per mile rates will be adjusted downward to account for the number of transmission paths provided for Tandem Switched Transport over the involved DS1 or DS3 transport channel. Direct Trunked Transport transport channel per month fixed and per month per mile rates will be adjusted downward by the ratio of the Tandem Switched Transport transmission paths to the total transmission paths of the involved Transport Channel (e.g., using a DS1 channel with 24 transmission paths, if 12 transmission paths were provided for Tandem Switched Transport, the ratio would be 12/24 and the adjustment would be 1/2 of the Direct Trunked Transport DS1 Transport Channel rate). The adjusted rate is then the per month fixed and per month per mile rate for the involved Direct Trunked Transport.

If additional Tandem Switched Transport transmission paths are added, a new ratio is developed and the rate adjusted downward. If Tandem Switched Transport transmission paths are removed, a new ratio is developed and the rate adjusted upward. S x

x Issued on not less than 2 days' notice under authority of Special Permission No. 93-992 of the Federal Communications Commission to defer the effective date from December 1, 1993 to December 30, 1993

6. Switched Access Service (Cont'd)

6.7 Rate Regulations (Cont'd)

6.7.1 Description and Application of Rates and Charges (Cont'd)

(D) Application of Rates to Rate Elements (Cont'd) (T)

(9) Transport Application (T)

An Entrance Facility, EISCC, or Direct Trunked Transport is required for all Switched Access Service except when the customer directs its Switched Access Service over another customer's facility as set forth in 6.1.3(A) preceding. (T)

The customer must order Direct Trunked transport from the customer's serving wire center to an access tandem with Tandem Switched Transport from the access tandem to the end office(s). Transport options may be selected on a tandem and feature group basis. (T)

(This page filed under Transmittal No. 2059)

6. Switched Access Service (Cont'd)

6.7 Rate Regulations (Cont'd)

6.7.1 Description and Application of Rates and Charges (Cont'd)

(D) Application of Rates to Rate Elements (Cont'd)

(9) Transport Application (Cont'd) Sx

For ALA and FGA Switched Access Service, the customer shall select the first point of switching and Direct Trunked Transport will be provided to the selected first point of switching. In the terminating direction of ALA and FGA, calls which terminate to end offices other than the first point of switching will be provided over Tandem Switched Transport from the first point of switching to the terminating end office. Tandem Switched Transport rates per minute of use fixed and per minute of use per mile will apply. Tandem Switched Transport minutes are as set forth in (E) following. The chargeable minutes of use for determining the charges are the minutes that are carried over the involved Tandem Switched Transport facilities. The chargeable minutes are determined as set forth in 6.7.8 following. The mileage between the end office involved and the FGA first point of switching is determined as set forth in 6.17.13 following. Tandem Switching charges as set forth in 6.8.2(C)(2) following do not apply. Sx

x Issued on not less than 2 days' notice under authority of Special Permission No. 93-992 of the Federal Communications Commission to defer the effective date from December 1, 1993 to December 30, 1993

6. Switched Access Service (Cont'd)

6.7 Rate Regulations (Cont'd)

6.7.1 Description and Application of Rates and Charges (Cont'd)

(D) Application of Rates (Cont'd)

(3) When ALA, FGA, ATA-950, FGB or Toll Free Access Service or 900 Access Service provided to an entry switch has usage originating from and/or terminating at both end offices that have been converted to equal access and end offices that have not been converted, the premium and non-premium rates for Switched Access Service (including Carrier Common Line) will apply in the following manner: T

(a) All access minutes that originate from or terminate at the equal access end office(s) will be billed at premium rates. Access minutes that originate from or terminate at end offices not equipped with equal access capabilities, will continue to be billed at non-premium rates. Non-premium rates will apply as follows.

(I) The number of non-premium access minutes to be billed is derived by subtracting the number of premium rated access minutes from the total number of access minutes.

(II) Premium access minutes will be determined as set forth in (b) following.

6. Switched Access Service (Cont'd)

6.7 Rate Regulations (Cont'd)

6.7.1 Description and Application of Rates and Charges (Cont'd) Sx

(D) Application of Rates (Cont'd)

(3) (Cont'd)

(b) The number of access minutes to be rated as premium access minutes is determined as follows:

(I) Where measured capability exists, and end office specific usage data is available, premium rates will apply to all access minutes originating from or terminating at equal access end office(s).

(II) Where measurement capability does not exist and/or end office specific usage data is not available, originating and/or terminating ALA or FGA usage will be apportioned between premium and non premium usage as described following. The usage to be apportioned will be the recorded usage or the assumed usage as set forth in 6.7.8 following. Such apportionment will be based on the ratio of the number of subscriber lines in the access area (i.e., local calling area, LATA, or end offices subtending the access tandem, as appropriate) of the entry switch that are served by equal access end offices to the total number of subscriber lines in that access area. The ratio thus developed is applied to the total measured or assumed originating ALA or FGA usage, or terminating ALA or FGA usage, as applicable, to determine the usage to be billed at premium rates, unless adjusted as set forth in (III) following.

The ratios used to determine the premium usage will be updated on a quarterly basis. The ratios to be used for the succeeding quarter will be provided to the customer with the last bill rendered in the preceding quarter or mailed separately within five working days after the first day of the new quarter (i.e., January, April, July and October).

x Issued on not less than 2 days' notice under authority of Special Permission No. 93-992 of the Federal Communications Commission to defer the effective date from December 1, 1993 to December 30, 1993

6. Switched Access Service (Cont'd)

6.7 Rate Regulations (Cont'd)

6.7.1 Description and Application of Rates and Charges (Cont'd)

(D) Application of Rates (Cont'd) (T)

(3) (Cont'd)
(b) (Cont'd)
(II) For purposes of administering this provision: (1) subscriber lines are defined as exchange service lines, Centrex lines and Centrex-type lines provided by the Telephone Company under its local and/or general exchange service tariff; (2) the access area is defined as the local calling area of the dial tone office for originating ALA and FGA, the LATA for terminating ALA and FGA and all end offices subtending the access tandem for originating and terminating ATA-950 or FGB; and (3) the local calling area of the dial tone office is as defined in the Telephone Company's local and/or general exchange service tariff.

(III) Where ATA-10XXX or FGD, except for PSDS ATA-10XXX or PSDS FGD, is provided to a customer in an end office(s) where ALA or FGA premium access minutes have been determined in accordance with (II) preceding, such premium access minutes will be adjusted in the following manner. For each ATA-10XXX or FGD access minute (excluding PSDS ATA-10XXX or PSDS FGD access minutes) originating from or terminating at that end office, the originating or terminating ALA or FGA premium access minutes determined as set forth in (II) preceding will be reduced on a one for one basis, but in no event shall the reduction exceed the total number of ALA or FGA premium access minutes originating from or terminating at that end office. The customer will be billed for the revised number of premium access minutes. (T)

(This page filed under Transmittal No. 2059)

6. Switched Access Service (Cont'd)

6.7 Rate Regulations (Cont'd)

6.7.1 Description and Application of Rates and Charges (Cont'd)

(D) Application of Rates (Cont'd)

(D)

(c) Where originating and/or terminating recording capability does not exist for ALA or FGA provided to an entry switch, the number of access minutes will be assumed as set forth in 6.7.8 following.

The Telephone Company will provide written notification to all access customers of record within a particular LATA that an end office in the LATA is scheduled to be converted to an equal access end office. This notification will be sent, via certified U.S. Mail, to each customer of record in the LATA where the conversion is scheduled to occur, at least six months in advance of the conversion date.

(D)

(This page filed under Transmittal No. 2059)

6. Switched Access Service (Cont'd)

6.7 Rate Regulations (Cont'd)

6.7.1 Description and Application of Rates and Charges (Cont'd)

(D) Application of Rates (Cont'd) (T)

(D)

(c) The customer will have the choice of converting existing services to equal access (i.e., ATA-10XXX and FGD at no charge pursuant to the conditions set forth in 6.7.6 following or retaining the existing services. Premium rates will apply to the total access minutes beginning on the actual conversion date, whether the customer chooses to convert to ATA-10XXX and FGD or retain existing services. (T)

(E) Toll Free Access Service Charges (T)

The Toll Free Access Service Basic Query charge is assessed to the customer on a per query basis. Additional charges may apply to Toll Free Access Service optional features. These charges are billed in addition to the Basic Query charge. The Six Digit Master Number List Turnaround charge is billed in lieu of the Toll Free Access Basic Query charge when customer identification is performed for Canadian and Caribbean toll free numbers. There are no optional features associated with this function. These charges are as described in 6.8.12 following.

(F) 500 Access Service Charges (T)

A nonrecurring charge is assessed when the customer activates or deactivates the first NXX per central office per order. Each additional NXX activation or deactivation per central office on the same order will have a nonrecurring charge.

6. Switched Access Service (Cont'd)

6.7 Rate Regulations (Cont'd)

6.7.3 (T)
(D)

(This page filed under Transmittal No. 2059)

6. Switched Access Service (Cont'd)

6.7 Rate Regulations (Cont'd)

6.7.3 (T)
(T)
(D)

(D)

(This page filed under Transmittal No. 2059)

6. Switched Access Service (Cont'd)

6.7 Rate Regulations (Cont'd)

6.7.3 (T)

(D)

(D)

(This page filed under Transmittal No. 2059)

6. Switched Access Service (Cont'd)

6.7 Rate Regulations (Cont'd)

6.7.3 (T)

(D)

(D)

(D)

(This page filed under Transmittal No. 2059)

6. Switched Access Service (Cont'd)

6.7 Rate Regulations (Cont'd)

6.7.3 (T)

(D)

(D)

(D)

(This page filed under Transmittal No. 2059)

6. Switched Access Service (Cont'd)

6.7 Rate Regulations (Cont'd)

6.7.3 Dx

(C)

(8)

Dx

x Issued not less than 6 day's notice under authority of Special Permission No. 88-215 of the Federal Communications Commission

6. Switched Access Service (Cont'd)

6.7 Rate Regulations (Cont'd)

6.7.3 Dx

(C)

(9)

Dx

x Issued not less than 6 day's notice under authority of Special Permission No. 88-215 of the Federal Communications Commission

6. Switched Access Service (Cont'd)

6.7 Rate Regulations (Cont'd)

6.7.3 Dx

(C)

(10)

Dx

x Issued not less than 6 day's notice under authority of Special Permission No. 88-215 of the Federal Communications Commission

6. Switched Access Service (Cont'd)

6.7 Rate Regulations (Cont'd)

6.7.3 Dx

(C)

(11)

(12)

Dx

x Issued not less than 6 day's notice under authority of Special Permission No. 88-215 of the Federal Communications Commission

6. Switched Access Service (Cont'd)

6.7 Rate Regulations (Cont'd)

6.7.3 Dx

(C)

(13)

Dx

x Issued not less than 6 day's notice under authority of Special Permission No. 88-215 of the Federal Communications Commission

6. Switched Access Service (Cont'd)

6.7 Rate Regulations (Cont'd)

6.7.3 Dx

(C)

(14)

Dx

x Issued not less than 6 day's notice under authority of Special Permission No. 88-215 of the Federal Communications Commission

6. Switched Access Service (Cont'd)

6.7 Rate Regulations (Cont'd)

6.7.3 Dx

(C)

(15)

(16)

Dx

x Issued not less than 6 day's notice under authority of Special Permission No. 88-215 of the Federal Communications Commission

6. Switched Access Service (Cont'd)

6.7 Rate Regulations (Cont'd)

6.7.3 Dx

(C)

(17)

(18)

Dx

x Issued not less than 6 day's notice under authority of Special Permission No. 88-215 of the Federal Communications Commission

6. Switched Access Service (Cont'd)

6.7 Rate Regulations (Cont'd)

6.7.4 Minimum Period Charge

The Minimum Period Charge applies when the customer requests disconnect of Switched Access Service prior to the expiration of the thirty day minimum period.

The Minimum Period Charge consists of the following:

(A) The Switched Transport Entrance Facility charges, Direct Trunked Transport charges, Switched Transport Multiplexor charges associated with Entrance Facility and Direct Trunked transport, and Optional Features per month charges as set forth in 6.8.7 following.

(B) All usage sensitive rate elements, following, based on actual usage: Switched Transport Tandem Switched Tandem Switching, Information Surcharge, Local Switching, Basic Toll Free Access Service Query charge and Line Information Data Base (LIDB) Service, as set forth in 6.8 following. (T) (T)

(C) Nonrecurring charges associated with the establishment of service, as set forth in 6.8 following. (T)

(This page filed under Transmittal No. 2059)

6. Switched Access Service (Cont'd)

6.7 Rate Regulations (Cont'd)

6.7.4 D

6.7.5

D

6. Switched Access Service (Cont'd)

6.7 Rate Regulations (Cont'd)

6.7.5 D

D

6. Switched Access Service (Cont'd)

6.7 Rate Regulations (Cont'd)

6.7.5 D

D

6. Switched Access Service (Cont'd)

6.7 Rate Regulations (Cont'd)

6.7.6 Change of Feature Group or Access Arrangement Type

Changes from one type of feature group or Access Arrangement to another will be treated as discontinuance of one type of service and a start of another. Nonrecurring charges will apply, with four exceptions.

(1) When a customer upgrades an ALA, FGA, ATA-950 or FGB service to an ATA-101XXXX or FGD service, or an (T)
ALA or FGA service to a FGB or ATA-950 service, the (T)
nonrecurring charge will not apply if the following conditions are met:

(a) The same customer premises is maintained, and

(b) The disconnections of ALA or FGA service and the start of FGB, ATA-950, ATA-101XXXX or FGD service are withinthe same LATA; or the disconnections of ATA-950 or FGB service and the start of FGD or ATA-101XXXX service are (C) within the same tandem subtending area.

(c) The orders for the disconnect of the ALA or FGA service for the start of ATA-101XXXX or FGD service are placed with the Telephone Company within 30 days of allocation of the most recent end office conversion to equal access in the LATA or the orders for the disconnect of ATA-950 or FGB service f or the start of ATA-101XXXX or FGD service are placed with the Telephone Company within 30 days of the allocation of the most recent end office conversion to equal access in the tandem subtending area or the orders for the disconnect of ALA or FGA service for the start of ATA-950 or FGB service are placed with the Telephone Company within 30 days of the start of ATA-950 or FGB service and

(This page filed under Transmittal No. 2059)

6. Switched Access Service (Cont'd)

6.7 Rate Regulations (Cont'd)

6.7.6 Change of Feature Group or Access Arrangement Type (Cont'd)

(1) (Cont'd)

(d) The customer requests the same effective date for both the disconnect of service and start of service, or (T)

(e) The customer requests that the disconnect date on the ALA, FGA, ATA-950 or FGB service, for the start of ATA-101XXXX or FGD service, be no more than 60 days after allocation. The customer requests the disconnect date of the ALA or FGA service for the start of ATA-950 or FGB service be no more than 90 days after the start of the new ATA-950 or FGB service.

(f) In the case of an ALA or FGA to ATA-950 or FGB change, the ATA-950 or FGB trunks that are requested are served from an access tandem.

(2) When a FGC service is upgraded to an ATA-101XXXX or FGD service, the nonrecurring charge will not apply. Because FGC is no longer available in an end office once the end office is equipped with equal access capabilities, (i.e., ATA-101XXXX or FGD), such upgrades will be performed by the Telephone Company without the customer being required to place an order for the change.

When the effective dates for the disconnect and start of ATA-101XXXX or FGD service are the same, minimum period obligations will not change, (i.e., the time elapsed in the existing minimum period obligations will be credited to the minimum period obligations for ATA-101XXXX, FGD or the new ATA-950 or FGB). When the effective dates for the disconnect and start of service are different, new minimum period obligations will be established for the ATA-101XXXX,FGD or the new ATA-950 or FGB service. For all other changes from one type of Feature Group or Access Arrangement to another, new minimum period obligations will also be established.

(This page filed under Transmittal No. 2059)

6. Switched Access Service (Cont'd)

6.7 Rate Regulations (Cont'd)

6.7.6 Change of Feature Group or Access Arrangement Type (Cont'd)

(3) When a change of signaling type from multi frequency address signaling to SS7 signaling requires a change of feature group type, i.e., when the FGD or ATA-101XXXX CCSAC optional feature is specified, the nonrecurring charge will not apply, provided there is no change in the physical serving arrangement of existing Switched Access trunks.

(4) Conversions from an access arrangement to its equivalent feature group will be treated as a discontinuance of one type of service and a start of another (nonrecurring charges will apply, also, new minimum period obligations will be established).

(5) On or after December 30, 1993, when Switched Transport rate elements become effective, the customer's existing services will be converted up to a DS1 level without a nonrecurring charge as long as existing facilities are utilized. The Telephone Company will provide a listing of the services to the customer for the Entrance Facilities, Direct Trunked Transport and Tandem Switched Transport arrangements provided. Rearrangements, if necessary, will be made by the Telephone Company in the most reasonable time period. The Telephone Company will work cooperatively with the customer to effect these changes. If the customer desires to change the facilities (e.g. voice-grade to DS1, DS1 to DS3) provided for the access service, the change will be treated as a disconnect and add, and the customer shall provide an appropriate order as, set forth in Section 5 preceding, for the change.

(D)

(D)

(This page filed under Transmittal No. 2013)

6. Switched Access Service (Cont'd)

6.7 Rate Regulations (Cont'd)

6.7.6 Change of Feature Group or Access Arrangement (Cont'd)

(D)

(D)

(This page filed under Transmittal No. 2013)

6. Switched Access Service (Cont'd)

6.7 Rate Regulations (Cont'd)

6.7.8 Measuring Access Minutes

Customer traffic to end offices will be measured (i.e., recorded or assumed) by the Telephone Company at end office switches or access tandem switches. Originating and terminating calls will be measured (i.e., recorded or assumed) by the Telephone Company to determine the basis for computing chargeable access minutes.

For local Switching, Information Surcharge, and Local Switching Optional Features usage based charges for terminating calls over ALA, FGA, ATA-950, FGB, FGC, 800, ATA-101XXX and FGD, and (C)
for originating calls over ALA or FGA where the off-hook supervisory signal is provided by the customer's equipment, FGB, ATA-950, ATA-101XXXX and FGD, the measured minutes are the (C)
chargeable access minutes. For Switched Transport and Tandem Switching usage based charges for terminating calls over ATA-950, ATA-101XXXX and FGD, the measured minutes carried over the (C)
involved Switched Transport Tandem Switched Transport are the chargeable access minutes.

For Local Switching, Information Surcharge, and Local Switching Optional Features usage based charges for originating calls over ALA or FGA, FGC, ATA-101XXXX and FGD with conventional (C)
signaling where the off-hook supervisory signal is forwarded by the customer's equipment when the called party answers, the chargeable access minutes are derived from recorded minutes in the following manner. Also when determining Switched Transport, Tandem Switched Transport and Tandem Switching usage (C)
based charges for originating calls over FGC, ATA-101XXXX and FGD with conventional signaling where the off-hook supervisory signal is forwarded by the customer's equipment when the called party answers, the chargeable access minutes are derived in the following manner from recorded minutes carried over the involved Switched Transport and Tandem Switched Transport.

(This page filed under Transmittal No. 1999)

6. Switched Access Service (Cont'd)

6.7 Rate Regulations (Cont'd)

6.7.8 Measuring Access Minutes (Cont'd)

Step 1: Obtain recorded originating minutes and messages (measured as set forth in (B) and (C) following for ALA, FGA, FGC, ATA-101XXXX and FGD respectively) from the appropriate recording data. (C)

Step 2: Where measurement is not available, obtain the total attempts by dividing the originating measured messages by the completion ratio. Completion ratios (CR) are obtained for the major call categories such as DDD, operator, 800, 900, directory assistance and international from a sample study which analyzes the ultimate completion status of the total attempts which receive acknowledgement from the customer. That is, Measured Messages divided by Completion Ratio equals Total Attempts.

6. Switched Access Service (Cont'd)

6.7 Rate Regulations (Cont'd)

6.7.8 Measuring Access Minutes (Cont'd)

Step 3: Obtain the total non-conversation time additive (NCTA) by multiplying the total attempts (obtained in Step 2) by the NCTA per attempt ratio. The NCTA per attempt ratio is obtained from the sample study identified in Step 2 by measuring the non-conversation time associated with both completed and incompleted attempts. The total NCTA is the time on a completed attempt from customer acknowledgement of receipt of call to called party answer (set up and ringing) plus the time on an incompleted attempt from customer acknowledgement of call until the access tandem or end office receives a disconnect signal (ring - no answer, busy or network blockage). That is, Total Attempts times Non-Conversation Time per Attempt Ratio equals Total NCTA. (N)

Step 4: Obtain total chargeable originating access minutes by adding the total NCTA (obtained in Step 3) to the recorded originating measured minutes (obtained in Step 1). That is, Measured Minutes plus NCTA equals Chargeable Originating Access Minutes.

Following is an example which illustrates how the chargeable originating access minutes are derived from the measured originating minutes using this formula.

Where: Measured Minutes (M. Min.) = 7,000
Measured Messages (M. Mes.) = 1,000
Completion Ratio (CR) = .75
NCTA per Attempt = .4

(1) Total Attempts = $\frac{1,000(\text{M. Mes})}{.75\ (\text{CR})}$ = 1,333.00

(2) Total NCTA = .4 (NCTA per Attempt) x 1,333.33 =533.33

(3) Total Chargeable Originating Access Minutes = 7,000(M. Min) + 533.33(NCTA) = 7,533.33

When assumed minutes are used, the assumed minutes are the chargeable access minutes. (N)

Material omitted from this page now appears on 1st Revised Page 220.2.

6. Switched Access Service (Cont'd)

6.7 Rate Regulations (Cont'd)

6.7.8 Measuring Access Minutes (Cont'd)

ALA and FGA access minutes or fractions thereof, the exact value of the fraction being a function of the switch technology where the measurement is made, are accumulated over the billing period for each line or hunt group, and are then rounded up to the nearest access minute for each line or hunt group. FGB, ATA-950, FGC, ATA-101XXXX and FGD (except FGD and ATA-101XXXX (C) used for PSDS Access) access minutes or fractions thereof, the exact value of the fraction being a function of the switch technology where the measurement is made, are accumulated over the billing period for each end office, and are then rounded up to the nearest access minute for each end office. For ATA-101XXXX and FGD used for PSDS Access, access minutes are not (C) accumulated over the billing period and then rounded up, but are rounded up on a per call basis. For PSDS Access, the charge of one access minute applies for one minute or any fraction thereof, (e.g., for a PSDS Access call of 3/4 of one minute, the charge of one access minute applies; for a PSDS Access Call of 1 3/4 minutes, the charge of two access minutes applies).

Assumed minutes are used for ALA and FGA service which originate or terminate in end offices not equipped with measurement capabilities.

The assumed average interstate access minutes for ALA and FGA are as set forth following.

When an ALA or FGA service arranged for two way calling is provided where neither the originating nor terminating access minutes are recorded, the assumed average interstate access minutes per two-way service are 2980 access minutes. 1192 access minutes are assumed to be originating and 1788 access minutes are assumed to be terminating. When an ALA or FGA service arranged for two-way calling is provided where recording capability exists for either originating or terminating usage, but not both, the number of assumed access minutes per two-way service will be 2980 access minutes or the recorded usage, whichever is greater. If the usage in the measured direction exceeds 2980 access minutes, it will be assumed that there is zero usage in the unmeasured direction. If the measured usage is less than 2980 access minutes, the usage in the unmeasured direction will be assumed to be 2980 access minutes minus the measured usage (e.g., 2980 - 1000 measured = 1980 assumed in the unmeasured direction.

(This page is filed under Transmittal No. 1999)

6. Switched Access Service (Cont'd)

6.7 Rate Regulations (Cont'd)

6.7.8 Measuring Access Minutes (Cont'd)

Additionally, when any or all the usage over an unmeasured ALA or FGA line originates from or terminates to a WATS Access Line(s) and the total ALA or FGA usage recorded at the WATS Serving Office(s) exceeds the assumed usage set forth preceding for ALA or FGA, the recorded usage will be billed to the customer in lieu of the assumed usage. C C C

When an ALA or FGA service arranged for originating calling only is provided where originating access minutes are not recorded, the assumed average originating access minutes are 1192 access minutes and no terminating access minutes will apply. C

When a ALA or FGA service arranged for terminating calling only is provided where terminating access minutes are not recorded, the assumed average terminating access minutes are 1788 access minutes and no originating access minutes will apply. C

(A) ALA and Feature Group A Usage Measurement C

For originating calls over and ALA or FGA, usage measurement begins when the originating ALA or FGA entry switch receives an off-hook supervisory signal forwarded from the customer's point of termination. This off-hook signal is either provided by the customer's equipment, or is forwarded by the customer's equipment when the called party answers. C C

The measurement of originating call usage over ALA or FGA ends when the originating ALA or FGA entry switch receives an on-hook supervisory signal from either the originating end user's end office, indicating the originating end user has disconnected, or the customer's point of termination, whichever is recognized first by the entry switch. C C

For terminating calls over ALA or FGA, usage measurement begins when the terminating ALA or FGA entry switch receives an off-hook supervisory signal from the terminating end user's end office, indicating the terminating end user has answered. The measurement of terminating call usage over ALA or FGA ends when the terminating ALA or FGA entry switch receives an on-hook supervisory signal from either the terminating end user's end office, indicating the terminating end user has disconnected, or the customer's point of termination, whichever is recognized first by the entry switch. C C C C

6. Switched Access Service (Cont'd)

6.7 Rate Regulations (Cont'd)

6.7.8 Measuring Access Minutes (Cont'd)

(B) Feature Group B and ATA-950 Usage Measurement C

For originating calls over ATA-950 or FGB, usage C
measurement begins when the originating ATA-950 or FGB C
entry switch receives answer supervision forwarded from
the customer's point of termination, indicating the
customer's equipment has answered.

The measurement of originating call usage over ATA-950 or C
FGB ends when the originating ATA-950 or FGB entry switch C
receives disconnect supervision from either the originating
end user's end office, indicating the originating end user
has disconnected, or the customer's point of termination,
whichever is recognized first by the entry switch.

For terminating calls over ATA-950 or FGB, usage C
measurement begins when the terminating ATA-950 or FGB C
entry switch receives answer supervision from the
terminating end user's end office, indicating the
terminating end user has answered.

The measurement of terminating call usage over ATA-950 C
or FGB ends when the terminating ATA-950 or FGB entry switch C
receives disconnect supervision from either the terminating
end user's end office, indicating the terminating end user
has disconnected, or the customer's point of termination,
whichever is recognized first by the entry switch.

(C) Feature Group C Usage Measurement

For originating calls over FGC, usage measurement begins
when the originating FGC entry switch receives answer
supervision from the customer's point of termination,
indicating the called party has answered.

The measurement of originating call usage over FGC ends
when the originating FGC entry switch receives disconnect
supervision from either the originating end user's end
office, indicating the originating end user has
disconnected, or the customer's point of termination,
whichever is recognized first by the entry switch.

6. Switched Access Service (Cont'd)

6.7 Rate Regulations (Cont'd)

6.7.8 Measuring Access Minutes (Cont'd)

(C) (Cont'd)

For terminating calls over FGC to services other than 800, 900 or Directory Assistance, terminating FGC usage may not be directly measured at the terminating entry switch, but may be imputed from originating usage, excluding usage from calls to 800, 900 or Directory Assistance Services. Actual measured usage will be used where available rather than an imputed value.

For terminating calls over FGC to 800 service, usage measurement begins when the terminating FGC entry switch receives answer supervision from the terminating end user's end office, indicating the terminating 800 Service end user has answered.

The measurement of terminating call usage over FGC to 800 service ends when the terminating FGC entry switch receives an on-hook supervisory signal from the terminating end user's end office, indicating the terminating 800 Service end user has disconnected, or from the customer's point of termination, whichever is recognized first by the entry switch.

Certain regulations previously found on this page can now be found on Page 220.6.

6. Switched Access Service (Cont'd)

6.7 Rate Regulations (Cont'd)

6.7.8 Measuring Access Minutes (Cont'd)

(D) ATA-101XXXX and Feature Group D Usage Measurement (C)

For originating calls over ATA-101XXXX or FGD with (C)
multifrequency address signaling, usage measurement begins
when the originating ATA-101XXXX or FGD entry switch receives (C)
the first wink supervisory signal forwarded from the
customer's point of termination. For originating calls
over ATA-101XXXX or FGD with SS7 signaling, usage (C)
measurement begins when the last point of switching sends
the initial address message to the customer.

For 800 and 900 calls originating from end offices not
having equal access capability using ATA-101XXXX or FGD with (C)
conventional signaling, usage measurement begins when the
originating ATA-101XXXX or FGD entry switch receives either (C)
an off-hook supervisory signal forwarded from the
customer's point of termination or answer supervision from
the customer's point of termination indicating the called
party has answered.

The measurement of originating call usage over ATA-101XXXX or (C)
FGD ends when the originating ATA-101XXXX or FGD entry switch (C)
receives disconnect supervision from either the originating
end user's end office, indicating the originating end user
has disconnected, or the customer's point of termination,
whichever is recognized first by the entry switch.

For terminating calls over ATA-101XXXX or FGD, the (C)
measurement of access minutes begins when the terminating
ATA-101XXXX or FGD entry switch receives answer supervision (C)
from the terminating end user's end office, indicating the
terminating end user has answered.

The measurement of terminating call usage over ATA-101XXXX or (C)
FGD ends when the terminating ATA-101XXXX or FGD entry switch (C)
receives disconnect supervision from either the terminating
end user's end office, indicating the terminating end user
has disconnected, or the customer's point of termination,
whichever is recognized first by the entry switch.

(This page filed under Transmittal No. 1999)

6. Switched Access Service (Cont'd)

6.7 Rate Regulations (Cont'd)

6.7.8 Measuring Access Minutes (Cont'd)

(D) Feature Group D Usage Measurement (Cont'd)

For purposes of assessing the Operator Transfer Service Charge as specified in 6.8.2(I)(1) following, a call is considered transferred when the Telephone Company Operator activates the switch transferring the call to the designated customer. Sx

x Issued on not less than 2 days' notice under authority of Special Permission No. 93-992 of the Federal Communications Commission to defer the effective date from December 1, 1993 to December 30, 1993.

6. Switched Access Service (Cont'd)

6.7 Rate Regulations (Cont'd)

6.7.9 D

D

6. Switched Access Service (Cont'd)

6.7 Rate Regulations (Cont'd)

6.7.9

6.7.10 Application of Rates ALA and for Feature Group A Extension Service

ALA and FGA Switched Access Service is available (T)
with extensions, i.e., additional terminations of the service
at different building(s) in the same or a different LATA.
ALA and Feature Group A extensions in the same LATA and same
state are charged for under the Telephone Company's local
and/or general exchange service tariffs. ALA and FGA (T)
extensions in different LATAs or in a different state
in the same LATA are charged for as Special Access Service.
The rate elements which apply are: A Voice Grade Channel
Termination, Channel Mileage, if applicable, and signaling
capability, if applicable. All appropriate monthly rates and
nonrecurring charges set forth in 7.5.3 (Voice Grade Service) (T)
following will apply. Such extensions are ordered as set forth
in 5.2 (Access Order) preceding. (T)

(This page filed under Transmittal No. 2059)

(T)
(D)

6. Switched Access Service (Cont'd)

6.7 Rate Regulations (Cont'd)

6.7.11 Message Unit Credit

Calls from End Users to the seven-digit local telephone numbers associated with ALA and Feature Group A Switched C
Access Service are subject to Telephone Company local and or general exchange service tariff charges (including message unit and toll charges as applicable). The monthly bills rendered to customers for their ALA and Feature Group A C
Switched Access Service will include a credit to reflect any message unit charges collected from their End Users under the Telephone Company's local and or general exchange service tariffs. The credit will apply for recorded originating usage or for assumed originating usage, as appropriate for the ALA and FGA service provided. When the credit is applied on C
assumed usage, such credit will not exceed the assumed levels of usage set forth in 6.7.8 preceding. No credit will apply for any terminating ALA and FGA access minutes. The message C
unit credit for originating ALAand FGA access minutes is as C
set forth in 6.8.6 following.

6.7.12 Community Information Services

Calls over Switched Access in the terminating direction to certain community information services will be rated under the applicable rates for Switched Access Service as set forth in 6.8 following. In addition, the charges per call as specified under the Telephone Company's local and/or general exchange service tariffs, e.g., 976 (DIAL-IT) Network Services, will also apply.

6. Switched Access Service (Cont'd)

6.7 Rate Regulations (Cont'd)

6.7.13 Mileage Measurement

The mileage to be used to determine the distance sensitive portion of the Switched Transport rate is calculated on the airline distance between the end office switch where the call carried by Switched Transport originates or terminates and the customer's serving wire center, except as set forth in (A) through (F) following. The V&H Coordinates method is used to determine mileage. This method is set forth in the NECA, INC. F.C.C. NO. 4. (T) (T)

Host-Remote

When Direct Trunked Transport is provided to a host-remote arrangement, mileage for Direct Trunked Transport is calculated using the V&H coordinates of the customer's serving wire center and the host office. Mileage for Host Remote Transmission is calculated using the V&H coordinates of the host office and the remote switching system or remote switching module where the call originates or terminates. (T) (T) (T) (T)

When Tandem Switched Transport is provided to a host-remote arrangement, mileage for Tandem Switched Transmission is calculated using the V&H coordinates of the tandem and the host office. Mileage for Host Remote Transmission is calculated using the V&H coordinates of the host office and the remote switching system or remote switching module where the call originates or terminates. (T) (T) (T) (T)

To determine the rate to be billed, compute the mileage using the V&H coordinates method, and apply to the rate shown in 6.8.2 following. If the calculation results in a fraction of a mile, always round up to the next whole mile before determining the mileage and applying the rates.

(This page filed under Transmittal No. 2059)

6. Switched Access Service (Cont'd)

6.7 Rate Regulations (Cont'd)

6.7.13 Mileage Measurement (Cont'd)

Exceptions to the mileage measurement rules are as follows:

(A) Mileage for Direct Trunked Transport for ALA or FGA Switched Access Service will be calculated on an airline basis, using the V&H coordinates method, between the end office switch where the ALA or Feature Group A switching dial tone is provided and the customer's serving wire center for the Switched Access Service provided. (T)

In addition, mileage in the terminating direction for ALA or FGA Switched Access Service access minutes which terminate at an end office other than the end office switch where the ALA or FGA switching dial tone is provided, will be calculated on an airline basis, using the V&H coordinates method, between the end office switch where the access minutes terminate and the end office switch where the ALA or FGA switching dial tone is provided. Tandem Switched Transport per minute of use fixed and per minute of use per mile charges will be billed for these access minutes (excluding Tandem Switching). (T) (T) (T) (T)

(This page filed under Transmittal No. 2059)

6. Switched Access Service (Cont'd)

6.7 Rate Regulations (Cont'd)

6.7.13 Mileage Measurement (Cont'd)

(B) When the Alternate Traffic Routing optional feature is provided with FGB, FGC, FGD, ATA-950 and ATA-101XXXX to provide service from an end office to different customer premises locations, usage rated Tandem Switched Transport access minutes will be apportioned between the two transmission routes used to provide this feature. For ATA-950, FGB and FGC, such apportionment will be made using standard Telephone Company traffic engineering methodology and will be based on the last trunk CCS desired for the high usage group, as described in 6.3.1(0) preceding, and the relative capacity ordered to the end office, when the feature is provided at an end office switch, or to the subtending end offices when the feature is provided at an access tandem switch. For ATA-101XXXX and FGD, the Tandem Switched transport mileage calculation will be based on the actual measured data which is recorded against the specific trunk group that carried a particular call. The customer will be billed accordingly. (T) (T) (T)

(This page filed under Transmittal No. 2059)

6. Switched Access Service (Cont'd)

6.7 Rate Regulations (Cont'd)

6.7.13 Mileage Measurement (Cont'd)

(C) Switched Transport mileage for access minutes originating from or terminating at a remote switching system or module (RSS or RSM) will be calculated on an airline basis between the customer premises serving wire center and the end office switch that serves as the host office and from the host office to the remote office serving the customer.

(D) When terminating ATA-950, FGB or FGC is provided from multiple customer's premises to an end office not equipped with measurement capabilities, the total Tandem Switched Transport access minutes for the end office will be apportioned among the trunk groups accessing the end office on the basis of the individual capacity, i.e., trunks ordered for each of those trunk groups. This apportionment will serve as the basis for Tandem Switched Transport mileage calculations. (T)

(E) Where measurement capability does not exist and/or end office specific usage data is not available, ALA and FGA terminating usage will be apportioned among the end offices in the access area of the entry switch to which the service is provided, as described following. The usage to be apportioned will be the recorded usage or the assumed usage as set forth in 6.7.8 preceding.

Such apportionment will be based on the ratio of the number of subscriber lines served by each end office in the access area to the total number of subscriber lines in the access area. The ratio thus developed is applied to the total ALA and FGA terminating usage.

Tandem Switched Transport mileage for the access minutes apportioned in this manner will be calculated on an airline basis, using the V&H coordinates method, between each end office to which minutes have been apportioned and the end office switch where the ALA or FGA switching dial tone is provided. (T)

(This page filed under Transmittal No. 2059)

6. Switched Access Service (Cont'd)

6.7 Rate Regulations (Cont'd)

6.7.13 Mileage Measurement (Cont'd)

(F) The Switched Transport mileage for access minutes which originate from or terminate to a WATS Access Line, except as set forth following, will be calculated on an airline basis, using the V&H coordinates method, between the WATS serving office at which the WATS Access Line terminates and the customer premises serving wire center for the Switched Access Service provided. Sx

When ALA and FGA usage originating from or terminating to a WATS Access Line Service is transported over an ALA and FGA line for which assumed minutes of use are billed, the Switched Transport Mileage for such usage will be calculated in accordance with (A) or (E) preceding as appropriate. Sx Sx

(G) The Switched Transport mileage for access minutes which originate from or terminate to a Radio Common Carrier's Type 2A Interconnection will be calculated on an airline basis, using the V&H coordinates method, between the wire center serving the RCC's point of interface and the interexchange carrier's point of presence serving wire center. Sx

6.7.14 Trunk Groups that carry Both Feature Group C and Telephone Company Traffic

When Feature Group C and Telephone Company traffic is combined on a single trunk group, and additional transmission paths are required to maintain the design blocking probability as set forth in 6.5.6(E) preceding, but it is not known whether the additional paths are required as a result of the Feature Group C or the Telephone Company traffic growth, the Telephone Company will proceed with corrective action as rapidly as possible to relieve the service problem (e.g. connect additional paths). Once data becomes available, and it is determined that the additional paths were required to carry the growth of the Feature Group C traffic on the group, the Telephone Company will recommend the customer order additional trunks as set forth in 6.5.6(E) preceding. Sx Sx

x Issued on not less than 2 days' notice under authority of Special Permission No. 93-992 of the Federal Communications Commission to defer the effective date from December 1, 1993 to December 30, 1993.

6. Switched Access Service (Cont'd)

6.7 Rate Regulations (Cont'd)

6.7.15 Shared Use

Shared use occurs when Switched Access Service and Special Access Service are provided over the same analog or digital high capacity service through a common interface. The regulations governing the provision of Shared Use Facilities are set forth in 5.2.10 preceding. Switched Access rates and charges as set forth in 6.8 following will apply for each channel of the high capacity facility that is used to provide Switched Access Service.

(D)

(D)

6.7.17 Information Surcharge

The Information Surcharge is a charge to recover costs that have been assigned to the interstate Information category through Parts 36 and 69 of the Commission's Rules. These costs are other than those incurred in the provision of interstate Directory Assistance Service as set forth in 9. following.

The Information Surcharge is assessed to the customer based on the total number of access minutes. The rates are set forth in 6.8.8 following. The application of these rates with respect to the individual Switched Access Services is as set forth in 6.7.1(E) preceding.

(This page filed under Transmittal No. 2023)

6. Switched Access Service (Cont'd)

6.7 Rate Regulations (Cont'd)

6.7.18 Billing Name and Address Service (Cont'd)

(A) The Telephone Company will, upon request, provide Billing Name and Address (BNA) Service for billing purposes only. BNA information will be released for subscribers when the customer or their authorized billing agent needs the information to bill a call and the originating telephone number is provided. T

The Telephone Company will not release BNA information in the event a subscriber requests that such information not be disclosed. N

(B) Magnetic Tape will be established as the standard format for the receipt of telephone numbers and the provision of billing name and address information. If in the course of Telephone Company business it is necessary to change the format, the Telephone Company will provide notification to the involved customers one month prior to the change. The Telephone Company will specify the locations(s) where requests are to be received.

(C) The customer shall order BNA under a Special Order 30 days prior to delivery of the first customer provided magnetic tape to the Telephone Company. The customer shall also provide a test magnetic tape to the Telephone Company 30 days in advance of the proposed delivery of the customer provided magnetic tape. With each order, the customer shall identify the authorized individual and address to receive the BNA output.

6. Switched Access Service (Cont'd)

6.7 Rate Regulations (Cont'd)

6.7.18 Billing Name and Address Service (Cont'd)

(D) The Telephone Company will receive from the customer a magnetic tape which contains the originating telephone numbers obtained through Automatic Number Identification. The frequency for receipt of the customer provided magnetic tapes will be at intervals, mutually agreed upon between the Telephone Company and the customer. The telephone numbers will programmatically be associated with the proper subscriber billing name and address contained in the CRIS file at that time. The information T will be returned to the customer according to the established procedures.

(E) BNA Service detail will not be retained by the Utility for longer than 45 days. If the customer requests that the initially provided output magnetic tape be made available again, such requests must be within 30 days from the date the first output magnetic tape was made available.

(F) Under no circumstances shall the customer or their T authorized billing agent resell the information, use the T information in connection with marketing, or provide the tapes or information to any parent, subsidiary, affiliate, agent of the customer, or to any third party.

(G) The charges for Billing Name and Address Service are set forth in 6.8.13 following.

6. Switched Access Service (Cont'd)

6.8 Rates and Charges (Cont'd)

6.8.1 X.25 Charges C

(A) Dedicated Connections

(1) X.75 Internetwork Interface

Synchronous	Monthly Rate	Nonrecurring Charge	USOC
- 9.6 Kbps	$450.00	$400.00	LADS9
- 56 Kbps	600.00	450.00	LADS5

(B) Usage Rate Charges

	Rate	
	Peak	Off-Peak
- Per Call Set-up	$0.00500	$0.00500
- Per segment of each call	0.00050	0.00050

(C) Per Minute Charges*

- initial minute	0.020	0.020
- each additional minute	0.010	0.010

(D) Optional Features

	Monthly Rate	Nonrecurring Charge	USOC
(1) Permanent Virtual Circuit (each circuit end)	$12.50	$25.00	LADPV

* Charges associated with public dial connection access to the X.25 network. C
These charges are billed to the X.75 customer.

6. Switched Access Service (Cont'd)

6.8 Rates and Charges (Cont'd)

6.8.1 X.25 Charges C

(D) Optional Features (Cont'd)

	Monthly Rate	Nonrecurring Charge	USOC
(2) Fast Select			
(a) Initiate (each DNA)	$ 5.00	$10.00	LADFS
(b) Acceptance (each DNA)	5.00	10.00	LADFA
(3) Hunt Group - Internal (each DNA)	2.50	10.00	LADHG
(4) Closed User Group (each DNA)	20.00	0.00	LADCU
(a) Incoming and outgoing calls limited to a Customer's CUG	2.50	0.00	LADC2
(b) Incoming calls allowed from the open network	2.50	0.00	LADCN
(c) Outgoing calls allowed to the open network	2.50	0.00	LADCT

6. Switched Access Service (Cont'd)

6.8 Rates and Charges (Cont'd)

6.8.1 X.25 Charges C

(D) Optional Features (Cont'd)

	Monthly Rate	Nonrecurring Charge	USOC
(d) Incoming calls allowed within the CUG	$ 2.50	$ 0.00	LADCD
(e) Outgoing calls allowed within the CUG	2.50	0.00	LADCE
(5) DTE Back-up (each alternate DNA)	5.00	20.00	LADTB
(6) Additional Logical Channels (each channel)	3.00	10.00	LADLC

(E) Change Charges

(1) Optional features - per billing telephone number		75.00	LADCH
(2) DNA number change - per billing telephone number		75.00	LADCH
(3) Parameter options - per billing telephone number		75.00	LADCH

6. Switched Access Service (Cont'd)

6.8 Rates and Charges (Cont'd)

6.8.2 Switched Transport

(A) Entrance Facilities (Per Point of Termination)

	USOC	Zone	Monthly Rate	Nonrecurring Charges 1st	Nonrecurring Charges Add'l
(1) Voice Grade					
2-wire	TSW2X	1	$ 29.70	$502.50	$ 325.00
2-wire	TSW2X	2	29.70	502.50	325.00
2-wire	TSW2X	3	29.70	502.50	325.00
4-wire	TSW4X	1	41.40	502.50	325.00
4-wire	TSW4X	2	41.40	502.50	325.00
4-wire	TSW4X	3	41.40	502.50	325.00
(2) DS1	TMESW	1	130.00(R)	633.50	300.00
	TMESW	2	170.00(R)	633.50	300.00
	TMESW	3	180.00(R)	633.73	300.00

Rates contained in this transmittal are subject to subsequent adjustment, effective retrospectively back to the transmittal's original effective date, in the event the Commission or a court subsequently authorizes Pacific to correct its rates pursuant to the decision in United States Telephone Association v. FCC (Case No. 97-1469)(slip. op. May 21, 1999)(D.C. Cir.), or pursuant to pending motions, or petitions for reconsideration or waiver, or in the event of any other adjustment pursuant to an order of the Commission or a court.

(This page filed under Transmittal No. 2054)

ACCESS SERVICE

6. Switched Access Service (Cont'd)

6.8 Rates and Charges (Cont'd)

6.8.2 Switched Transport (Cont'd)

(A) Entrance Facilities (Per Point of Termination) (Cont'd)

	USOC	Monthly Rates	Nonrecurring Charges	
(3) Month-to-Month				
-Fiber Advantage[sm] DS3 with Terminal Equipment				C | C
Zone 1	Z3MSW	$2,500.00	$31,000.00	M
Zone 2	Z3MSW	2,500.00	31,000.00	|
Zone 3	Z3MSW	2,500.00	31,000.00	M
- Fiber Advantage[sm] DS3 without Terminal Equipment				C | C
Zone 1	Z0MSW	1,650.00	21,150.00	M
Zone 2	Z0MSW	1,650.00	21,150.00	|
Zone 3	Z0MSW	1,650.00	21,150.00	M
- Fiber Advantage[sm] DS3x3 with Terminal Equipment				N |
Zone 1	Z3MSW	7,558.00	56,200.00	|
Zone 2	Z3MSW	7,558.00	56,200.00	|
Zone 3	Z3MSW	7,558.00	56,200.00	|
- Fiber Advantage[sm] DS3x3 without Terminal Equipment				|
Zone 1	Z0MSW	4,659.00	43,200.00	|
Zone 2	Z0MSW	4,659.00	43,200.00	|
Zone 3	Z0MSW	4,659.00	43,200.00	N

Certain regulations on this page formerly appeared on page 228.
Certain regulations previously found on this page can now be found on page 228.7.

6. Switched Access Service (Cont'd)
6.8 Rates and Charges (Cont'd)
6.8.2 Switched Transport
(A) Entrance Facilities (Per Point of Termination)(Cont'd)
(4) Fiber Advantage^{SM} DS3 and DS3x3 Rate Stability Payment Plan

	USOC	Monthly Rates	Nonrecurring Charges
(a) 1 Year Plan			
- Fiber Advantage^{SM} DS3 with Terminal Equipment			
Zone 1	Z31SW	$2,100.00(R)	$3,000.00
Zone 2	Z31SW	2,100.00(R)	3,250.00
Zone 3	Z31SW	2,100.00(R)	3,500.00
- Fiber Advantage^{SM} DS3 without Terminal Equipment			
Zone 1	Z01SW	1,650.00	2,000.00
Zone 2	Z01SW	1,650.00	2,250.00
Zone 3	Z01SW	1,650.00	2,500.00
- Fiber Advantage^{SM} DS3x3 with Terminal Equipment			
Zone 1	Z31SW	6,300.00(R)	5,500.00
Zone 2	Z31SW	6,989.00	6,000.00
Zone 3	Z31SW	6,989.00	6,500.00
- Fiber Advantage^{SM} DS3x3 without Terminal Equipment			
Zone 1	Z01SW	4,053.00	4,000.00
Zone 2	Z01SW	4,053.00	4,500.00
Zone 3	Z01SW	4,053.00	5,000.00

Rates contained in this transmittal are subject to subsequent adjustment, effective retrospectively back to the transmittal's original effective date, in the event the Commission or a court subsequently authorizes Pacific to correct its rates pursuant to the decision in United States Telephone Association v. FCC (Case No. 97-1469)(slip. op. May 21, 1999)(D.C. Cir.), or pursuant to pending motions, or petitions for reconsideration or waiver, or in the event of any other adjustment pursuant to an order of the Commission or a court.

(This page filed under Transmittal No. 2079)

6. Switched Access Service (Cont'd)
6.8 Rates and Charges (Cont'd)
6.8.2 Switched Transport (Cont'd)

(A) Entrance Facilities (Per Point of Termination)(Cont'd)

(4) Fiber Advantage^{sm} DS3 and DS3x3 Rate Stability Payment Plan (Cont'd)

	USOC	Monthly Rates	Nonrecurring Charges
(b) 3 Year Plan			
- Fiber Advantage^{sm} DS3 with Terminal Equipment			
Zone 1	Z33SW	$1,450.00(R)	$1,500.00
Zone 2	Z33SW	1,450.00(R)	1,625.00
Zone 3	Z33SW	1,450.00(R)	1,750.00
- Fiber Advantage^{sm} DS3 without Terminal Equipment			
Zone 1	Z03SW	1,250.00	1,000.00
Zone 2	Z03SW	1,300.00	1,125.00
Zone 3	Z03SW	1,350.00	1,250.00
- Fiber Advantage^{sm} DS3x3 with Terminal Equipment			
Zone 1	Z33SW	3,250.00(R)	2,750.00
Zone 2	Z33SW	3,900.00	3,000.00
Zone 3	Z33SW	4,000.00	3,250.00
- Fiber Advantage^{sm} DS3x3 without Terminal Equipment			
Zone 1	Z03SW	2,200.00	2,000.00
Zone 2	Z03SW	2,300.00	2,250.00
Zone 3	Z03SW	2,400.00	2,500.00

Rates contained in this transmittal are subject to subsequent adjustment, effective retrospectively back to the transmittal's original effective date, in the event the Commission or a court subsequently authorizes Pacific to correct its rates pursuant to the decision in United States Telephone Association v. FCC (Case No. 97-1469)(slip. op. May 21, 1999)(D.C. Cir.), or pursuant to pending motions, or petitions for reconsideration or waiver, or in the event of any other adjustment pursuant to an order of the Commission or a court.

(This page filed under Transmittal No. 2079)

6. Switched Access Service (Cont'd)

6.8 Rates and Charges (Cont'd)

6.8.2 Switched Transport

(A) Entrance Facilities (Per Point of Termination)(Cont'd)

(4) Fiber Advantage^{sm} DS3 and DS3x3 Rate Stability Payment Plan (Cont'd)

(b) 3 Year Plan (Cont'd)

	USOC	Monthly Rates	Nonrecurring Charges
- Fiber Advantage^{sm} DS3x12 with Terminal Equipment			
Zone 1	Z23SE	$9,350.00(R)	$3,500.00
Zone 2	Z23SE	11,250.00	4,500.00
Zone 3	Z23SE	11,500.00	6,000.00
- Fiber Advantage^{sm} DS3x12 without Terminal Equipment			
Zone 1	Z23SO	7,800.00	3,000.00
Zone 2	Z23SO	8,050.00	4,000.00
Zone 3	Z23SO	8,300.00	5,000.00

Rates contained in this transmittal are subject to subsequent adjustment, effective retrospectively back to the transmittal's original effective date, in the event the Commission or a court subsequently authorizes Pacific to correct its rates pursuant to the decision in United States Telephone Association v. FCC (Case No. 97-1469)(slip. op. May 21, 1999)(D.C. Cir.), or pursuant to pending motions, or petitions for reconsideration or waiver, or in the event of any other adjustment pursuant to an order of the Commission or a court.

(This page filed under Transmittal No. 2079)

(T)
(D)

ACCESS SERVICE

6. Switched Access Service (Cont'd)
6.8 Rates and Charges (Cont'd)
6.8.2 Switched Transport
(A) Entrance Facilities (Per Point of Termination)(Cont'd)
(4) Fiber Advantage[sm] DS3 and DS3x3 Rate Stability Payment Plan (Cont'd)

	USOC	Monthly Nonrecurring Rates	Charges
(c) 5 Year Plan			
- Fiber Advantage[sm] DS3 with Terminal Equipment			
Zone 1	Z35SW	$1,190.00(R)	$0,000.00#
Zone 2	Z35SW	1,190.00(R)	0,000.00#
Zone 3	Z35SW	1,190.00(R)	0,000.00#
- Fiber Advantage[sm] DS3 without Terminal Equipment			
Zone 1	Z05SW	1,000.00(R)	0,000.00#
Zone 2	Z05SW	1,100.00(R)	0,000.00#
Zone 3	Z05SW	1,150.00(R)	0,000.00#
- Fiber Advantage[sm] DS3x3 with Terminal Equipment			
Zone 1	Z35SW	2,390.00(R)	0,000.00#
Zone 2	Z35SW	3,050.00(R)	0,000.00#
Zone 3	Z35SW	3,400.00(R)	0,000.00#
- Fiber Advantage[sm] DS3x3 without Terminal Equipment			
Zone 1	Z05SW	1,500.00(R)	0,000.00#
Zone 2	Z05SW	1,600.00(R)	0,000.00#
Zone 3	Z05SW	1,700.00(R)	0,000.00#

Nonrecurring charges associated with the installation of Fiber Advantage[sm] Services under a 5 year Rate Stability Plan are waived. (Z)

Rates contained in this transmittal are subject to subsequent adjustment, effective retrospectively back to the transmittal's original effective date, in the event the Commission or a court subsequently authorizes Pacific to correct its rates pursuant to the decision in United States Telephone Association v. FCC (Case No. 97-1469)(slip. op. May 21, 1999)(D.C. Cir.), or pursuant to pending motions, or petitions for reconsideration or waiver, or in the event of any other adjustment pursuant to an order of the Commission or a court.

(This page filed under Transmittal No. 2079)

6. Switched Access Service (Cont'd)

6.8 Rates and Charges (Cont'd)

6.8.2 Switched Transport

(A) Entrance Facilities (Per Point of Termination)(Cont'd)

(4) Fiber Advantage[sm] DS3 and DS3x3 Rate Stability Payment Plan (Cont'd)

	USOC	Monthly Rates	Nonrecurring Charges
(c) 5 Year Plan (Cont'd)			
- Fiber Advantage[sm] DS3x12 with Terminal Equipment			
Zone 1	Z25SE	$7,200.00(R)	$0,000.00#
Zone 2	Z25SE	8,500.00(R)	0,000.00#
Zone 3	Z25SE	8,900.00(R)	0,000.00#
- Fiber Advantage[sm] DS3x12 without Terminal Equipment			
Zone 1	Z25S0	5,800.00(R)	0,000.00#
Zone 2	Z25S0	6,100.00(R)	0,000.00#
Zone 3	Z25S0	6,500.00(R)	0,000.00#
(4) 274.176 Mbps	TWT++	ICB**	ICB**

** ICB rates and charges are filed in 7.6 following.
# Nonrecurring charges associated with the installation of Fiber Advantage[sm] Service under a 5 year Rate Stability Plan are waived.

Rates contained in this transmittal are subject to subsequent adjustment, effective retrospectively back to the transmittal's original effective date, in the event the Commission or a court subsequently authorizes Pacific to correct its rates pursuant to the decision in United States Telephone Association v. FCC (Case No. 97-1469)(slip. op. May 21, 1999)(D.C. Cir.), or pursuant to pending motions, or petitions for reconsideration or waiver, or in the event of any other adjustment pursuant to an order of the Commission or a court.

(This page filed under Transmittal No. 2079)

6. Switched Access Service (Cont'd)

6.8 Rates and Charges (Cont'd)

6.8.2 Switched Transport (Cont'd)

(B) Direct-Trunked Transport

	USOC	ZONE	Monthly Rate Fixed	Monthly Rate Per Mile
(1) Voice Grade per transport channel				
0 Miles	1L5SW	1	None	None
Over 0 Miles	1L5SW	1	6.50	$1.40(R)
0 Miles	1L5SW	2	None	None
Over 0 Miles	1L5SW	2	6.50	1.40(R)
0 Miles	1L5SW	3	None	None
Over 0 Miles	1L5SW	3	6.50	1.40(R)
(2) DS1 per transport channel				
0 Miles	1L5SW	1	None	None
Over 0 Miles	1L5SW	1	53.00	10.09
0 Miles	1L5SW	2	None	None
Over 0 Miles	1L5SW	2	70.00	10.09
0 Miles	1L5SW	3	None	None
Over 0 Miles	1L5SW	3	81.00	10.93
(3) DS3 per facility				
0 Miles	1L5SW	1	None	None
Over 0 Miles	1L5SW	1	500.00	32.73
0 Miles	1L5SW	2	None	None
Over 0 Miles	1L5SW	2	550.00	41.00
0 Miles	1L5SW	3	None	None
Over 0 Miles	1L5SW	3	600.00	41.00

Rates contained in this transmittal are subject to subsequent adjustment, effective retrospectively back to the transmittal's original effective date, in the event the Commission or a court subsequently authorizes Pacific to correct its rates to allow it to calculate its price cap formulas to exclude USF contributions from the operation of the X-factor, or in the event of any other adjustment pursuant to an order of the Commission or a court.

(This page filed under Transmittal No. 2103)

6. Switched Access Service (Cont'd)

6.8 Rates and Charges (Cont'd)

6.8.2 Switched Transport (Cont'd)

(C) Tandem Switched Transport

	ZONE	Per Access Minute
(1) Tandem Switched Transport		
Fixed per Access Minute of Use		
0 Miles	1	None
Over 0 Miles	1	$ .000153(I)
FGA Over 0 Miles	1	.000136
0 Miles	2	None
Over 0 Miles	2	.000264(I)
FGA Over 0 Miles	2	.000153
0 Miles	3	None
Over 0 Miles	3	.000465(I)
FGA Over 0 Miles	3	.000168
Per Mile per Access Minute of Use		
0 Miles	1	None
Over 0 Miles	1	.000027(I)
FGA Over 0 Miles	1	.000014
0 Miles	2	None
Over 0 Miles	2	.000049(I)
FGA Over 0 Miles	2	.000014
0 Miles	3	None
Over 0 Miles	3	.000084(I)
FGA Over 0 Miles	3	.000014
(2) Tandem Switching per Access Minute	1	.000850(I)
Tandem Switching per Access Minute	2	.001759(I)
Tandem Switching per Access Minute	3	.003583(I)

Rates contained in this transmittal are subject to subsequent adjustment, effective retrospectively back to the transmittal's original effective date, in the event the Commission or a court subsequently authorizes Pacific to correct its rates pursuant to the decision in United States Telephone Association v. FCC (Case No. 97-1469)(slip. op. May 21, 1999)(D.C. Cir.), or pursuant to pending motions, or petitions for reconsideration or waiver, or in the event of any other adjustment pursuant to an order of the Commission or a court.

(This page filed under Transmittal No. 2091)

6. Switched Access Service (Cont'd)

6.8 Rates and Charges (Cont'd)

6.8.2 Switched Transport (Cont'd)

(D)

(D)

(This page filed under Transmittal No. 2059)

ACCESS SERVICE

6. Switched Access Service (Cont'd)

6.8 Rates and Charges (Cont'd)

6.8.2 Switched Transport

(F) Tandem Switched Transport/Common Transport

(1) Host Remote Transmission

	ZONE	
Rate per Access Minute	1	.002605
	2	.002605
	3	.002605
Rate per Access Minute per mile	1	.000060
	2	.000060
	3	.000060

(2) Tandem End Office Multiplexing

Rate per Access Minute		.000196

(3) Dedicated Tandem Trunk Port

	USOC	
Rate per Month per Port	DTRPT	4.00(I)

Rates contained in this transmittal are subject to subsequent adjustment, effective retrospectively back to the transmittal's original effective date, in the event the Commission or a court subsequently authorizes Pacific to correct its rates to allow it to calculate its price cap formulas to exclude USF contributions from the operation of the X-factor, or in the event of any other adjustment pursuant to an order of the Commission or a court.

(This page filed under Transmittal No. 2020)

6. Switched Access Service (Cont'd)

6.8 Rates and Charges (Cont'd)

6.8.2 Switched Transport (Cont'd)

(G) Installation Per Order

		Nonrecurring Charges	
		First	Additional
- Per FGA, ALA line traversing Direct Trunked Transport		$550.00	$550.00
- Per FGB, ATA-950, FGD, ATA-10X or 800 Access Service traversing Direct Trunked transport or Tandem-Switched transport		450.00	184.00
(H) Rollovers			
- Per Point of Termination with No Change in Point of Termination	USOC		
DS3	SVRSW	498.00	350.00
DS1	SVRSW	498.00	350.00
DSO/VG	SVRDO	203.00(Iy)	45.00
FGA Line	SVRFA	352.00	200.00
- Per Point of Termination with Change in Point of Termination			
DS3	SVRST	696.00	438.00
DS1	SVRST	696.00	438.00
DSO/VG	SVRDT	429.00	183.00
FGA Line	SVRFT	352.00	200.00

y Material issued under authority of Special Permission No. 98-145 of the F.C.C.

Rates contained in this transmittal are subject to subsequent adjustment, effective retrospectively back to the transmittal's original effective date, in the event the Commission or a court subsequently authorizes Pacific to correct its rates to allow it to calculate its price cap formulas to exclude USF contributions from the operation of the X-factor, or in the event of any other adjustment pursuant to an order of the Commission or a court.

(This page filed under Transmittal No. 1991)

6. Switched Access Service (Cont'd)

6.8 Rates and Charges (Cont'd)

6.8.2 Switched Transport (Cont'd) Sx

(G) Optional Features (Cont'd) Sx

(1) Supervisory Signaling

		FID	
DX Supervisory Signaling arrangement - Per Transport Channel Path***	NCI	++DX+	Sx
SF Supervisory Signaling arrangement - Per Transport Channel Path#	NCI	++SF+	Sx
E&M Type I Supervisory Signaling arrangement - Per Transport Channel Path***	NCI	++EA+	Sx
E&M Type II Supervisory Signaling arrangement - Per Transport Channel Path***	NCI	++EB+	Sx
E&M Type III Supervisory Signaling - Per Transport Channel Path*	NCI	++EC+	Sx
Tandem Supervisory Signaling - Per Transport Channel Path**	NCI	++EX+	Sx

x Issued on not less than 2 days' notice under authority of Special Permission No. 93-992 of the Federal Communications Commission to defer the effective date from December 1, 1993 to December 30, 1993.
* Available with Interface Group 2 for FGC and FGD.
** Available with Interface Group 2 for FGA.
*** Available with Interface Groups 1 and 2.
\# Available with Interface Groups 1, 2, 5, 6 and 9. Sx

6. Switched Access Service (Cont'd)

6.8 Rates and Charges (Cont'd)

6.8.2 Switched Transport (Cont'd)

(H) Non Chargeable Optional Features (Cont'd)

		FID	
(2) Customer specification of the receive transmission level at the first point of switching within a range acceptable to the Telephone Company - Per Transport Channel Path***	TLV		
(3) Customer specification of Local Transport Termination Four-wire termination in lieu of two-wire termination - Per Transport Channel Path****	NC	S+T+	
(4) Common Channel Signaling (CCSAC)		CCS7	
(5) Tandem Signaling (MF or SS7)			Sx

D

x Reissued material to become effective on January 24, 1995.
Certain regulations previously found on this page can now be found on page 230.1.
*** Available with Interface Groups 2, 5, 6 and 9 for FGA and FGB. The range of transmission levels which may be specified is described in Technical Reference TR-NWT-000334.
**** Available with Feature Group B with Type B Transmission Specification.

6. Switched Access Service (Cont'd)

6.8 Rates and Charges (Cont'd)

6.8.2 Switched Transport (Cont'd)

(I) Chargeable Optional Features — Rate

(1) Operator Transfer Service

- Per Call Transferred	$.30

(2) Multiplexing - per Arrangement

	USOC	ZONE	Monthly Rate	Nonrecurring Charges
DS3 to DS1				
- Per Arrangement	MQ3SW	1	$325.00	None
- Per Arrangement	MQ3SW	2	350.00	None
- Per Arrangement	MQ3SW	3	375.00	None
DS1 to Voice/Digital				
Option 1	MQ1SW	1	250.00	None
Option 2	MQ2SW	1	250.00	None
DS1 to Voice/Digital				
Option 1	MQ1SW	2	275.00	None
Option 2	MQ1SW	2	275.00	None
DS1 to Voice/Digital				
Option 1	MQ1SW	3	300.00	None
Option 2	MQ1SW	3	300.00	None

(3) Carrier Identification Parameter (CIP) N

	USOC	Monthly Rate	Nonrecurring Charge	
- Per Trunk Group	C1PAT	$45.00	None	N

6. Switched Access Service (Cont'd)

6.8 Rates and Charges (Cont'd)

6.8.3 Local Switching for Feature Groups

(A) Usage Sensitive Rates

Premium Rates	Rates Per Access Minute
LS1 - Feature Groups A and B except for FGA and FGB used to terminate traffic to a WAL provided from an equal access end office.	$ 0.004393
LS2 - Feature Groups C and D, Toll Free Access Service, FGA and FGB used to terminate traffic to a WAL provided from an equal access end office and originating FGB routed to FGD as specified in Section 6.2.4(A)(8), preceding.	$ 0.004393
Non-Premium Rates	
- Per Access Minute	$ 0.001977

(B) Dedicated End Office Trunk Port	USOC	
Per Port	DTRPE	14.60(R)

(C) Shared End Office Trunk Port

Rate per Access Minute	.005050(R)

(D) Feature Group A Line Port	USOC	
Rate per Line	FGALP	14.60(R)

Rates contained in this transmittal are subject to subsequent adjustment, effective retrospectively back to the transmittal's original effective date, in the event the Commission or a court subsequently authorizes Pacific to correct its rates pursuant to the decision in United States Telephone Association v. FCC (Case No. 97-1469)(slip. op. May 21, 1999)(D.C. Cir.), or pursuant to pending motions, or petitions for reconsideration or waiver, or in the event of any other adjustment pursuant to an order of the Commission or a court.

(This page filed under Transmittal No. 2103)

6. Switched Access Service (Cont'd)

6.8 Rates and Charges (Cont'd)

6.8.3 Local Switching for Feature Groups (Cont'd)

(D) Common Switching Non-Chargeable Optional Features Used with Feature Groups Tx

	FID
Call Denial on Line or Hunt Group (available with FGA)	
- Per Transmission Path or Transmission Path Group	CAD
Service Code Denial on Line or Hunt Group (available with FGA)	
- Per Transmission Path or Transmission Path Group	SCD
Hunt Group Arrangement (available with FGA)	
- Per Transmission Path Group	HML/HTG
Uniform Call Distribution Arrangement (available with FGA)	
- Per Transmission Path Group	UCD
Nonhunting Number for Use with Hunt Group Arrangement or Uniform Call Distribution Arrangement (available with FGA)	
- Per Transmission Path	NHN

x Filed in compliance with FCC Orders DA 97-2358 and FCC 97-158, as amended.
(This page filed under Transmittal No. 1959.)

6. Switched Access Service (Cont'd)

6.8 Rates and Charges (Cont'd)

6.8.3 Local Switching for Feature Groups (Cont'd)

(D) Common Switching Non-Chargeable Optional Features Used with Feature Groups Tx

	FID
Automatic Number Identification (available with FGB, FGC and FGD)	
- Per Transmission Path Group	ANI
Up-to-7-Digit Outpulsing of Access Digits to IC (available with FGB)	
- Per Transmission Path Group	USDO
Cut-through (available with FGD)	
- Per End Office or Access Tandem	CTO
Revertive-Pulse Address Signaling (available with FGC)	
- Per Transmission Path Group	ADS RP
Delay-Dial Start-Pulsing Signaling (available with FGC)	
- Per Transmission Path Group	DDSP
Immediate-Dial-Pulse Address Signaling (available with FGC)	
- Per Transmission Path Group	ADS IDP

x Filed in compliance with FCC Orders DA 97-2358 and FCC 97-158, as amended.
(This page filed under Transmittal No. 1959.)

6. Switched Access Service (Cont'd)

6.8 Rates and Charges (Cont'd)

6.8.3 Local Switching for Feature Groups (Cont'd)

(D) Common Switching Non-Chargeable Optional Features Used with Feature Groups Tx

	FID
Dial-Pulse Address Signaling (available with FGC) - Per Transmission Path Group	ADS DP
Panel-Call-Indicator Address Signaling (available with FGC) - Per Transmission Path Group	ADS PCI
Service Class Routing (available with FGC and FGD) - Per Transmission Path Group	SCRT
Alternate Traffic Routing - Multiple Customer Premises Alternate Routing (available with FGB, FGC and FGD - Per Transmission Path - Per Transmission Path Group - End Office Alternate Routing When Ordered in trunks (available with FGB and FGD - Per Transmission Path - Per Transmission Path Group	ARTG

x Filed in compliance with FCC Orders DA 97-2358 and FCC 97-158, as amended.
(This page filed under Transmittal No. 1959.)

6. Switched Access Service (Cont'd)

6.8 Rates and Charges (Cont'd)

6.8.3 Local Switching for Feature Groups (Cont'd)

(D) Common Switching Non-Chargeable Optional Features Used with Feature Groups Tx

	FID
Band Advance Arrangement for Use with the WATS Access Line Service (available with FGC and FGD)	
- Per Arrangement	BAAD
End Office End User Line Service Screening for Use with originating only WATS Access Line Service* (available with FGC, and FGD)	
- Per WATS Access Line	BAND
Hunt Group Arrangement for Use with WATS Access Line Service (available with with FGC and FGD)	
- Per WATS Access Line Group	HML/HTG
Trunk Access Limitation Arrangement (available with FGC and FGD)	
- Per End Office	CHOK
Call Gapping Arrangement (available with FGD)	
- Per End Office	CGAP
International Carrier Option (available with FGD)	
- Per End Office and Access Tandem	INCO

x Filed in compliance with FCC Orders DA 97-2358 and FCC 97-158, as amended.
(This page filed under Transmittal No. 1959.)

6. Switched Access Service (Cont'd)

6.8 Rates and Charges (Cont'd)

6.8.3 Local Switching for Feature Groups (Cont'd)

(D) Common Switching Non-Chargeable Optional Features Used with Feature Groups Tx

	FID
Uniform Call Distribution Arrangement for Use with WATS Access Line Service (available with FGC and FGD)	
- Per WATS Access Line Group	HTY UD
Nonhunting Number for Use with Hunt Group Arrangement or Uniform Call Distribution Arrangement for Use with WATS Access Line Service (available with FGC and FGD)	
- Per WATS Access Line	NHN
LATA-Wide Terminating Access (Available with FGB)	LWTA
- Per Transmission Path or Transmission Path Group	

x Filed in compliance with FCC Orders DA 97-2358 and FCC 97-158, as amended.
(This page filed under Transmittal No. 1959.)

6. Switched Access Service (Cont'd)

6.8 Rates and Charges (Cont'd)

6.8.3 Local Switching for Feature Groups (Cont'd)

(D) Common Switching Non-Chargeable Optional Features Used with Feature Groups Tx

	USOC
Calling Party Number (CPN) *#	
- Per customer per switch	SLCPN
Charge Number (CN) *	SLCHG
- Per customer per switch	
Carrier Selection Parameter (CSP) *	
- Per customer per switch	SLCSP
Access Transport Parameter (ATP)*	
- Per customer per switch	

(E) Common Switching Chargeable Optional Feature Used with Feature Groups Tx

Public Switched Digital Service Access Switching Capability	Rate
- per access minute (for one minute or any fraction thereof, the charge of one access minute applies)	$0.12

(F) Switched Transport Termination Nonchargeable Options Tx

(1) Line-Side Terminations (For FGA)	FID
Two-Way Operation	
- Dial Pulse with Loop Start	NC +++A
- Dial Pulse with Ground Start	NC +++E
- DTMF with Loop Start	NC +++F
- DTMF with Ground Start	NC +++G

x Filed in compliance with FCC Orders DA 97-2358 and FCC 97-158, as amended.
(This page filed under Transmittal No. 1959.)

6. Switched Access Service (Cont'd)

6.8 Rates and Charges (Cont'd)

6.8.3 Local Switching for Feature Groups (Cont'd)

(F) Switched Transport Termination Nonchargeable Options (Cont'd) Tx

(1) Line-Side Terminations (For FGA) (Cont'd)

	FID
Terminating Operation	
- Dial Pulse with Loop Start	NC +++N
- Dial Pulse with Ground Start	NC +++P
- DTMF with Loop Start	NC +++R
- DTMF with Ground Start	NC +++S
Originating Operation	
- Loop Start	NC +++U
- Ground Start	NC +++V
(For FGB, FGC, and FGD)	
Standard Trunk for Originating, Terminating or Two-Way operation (available with FGB, FGC and FGD)	TTC SO TTC ST TTC TY
Rotary-Dial Station Signaling Trunk (available with FGB)	TTC RD
Operator Trunks - MOS, Coin, Non-Coin or Combined Coin and Non-Coin (available with FGC)	TTC CO TTC NC TTC CC
Operator Trunks - MOS Coin or Combined Coin and Non-Coin (available with FGD)	TTC CO TTC CC
Operator Trunks - EAOSS (available with FGD)	TTC FF

x Filed in compliance with FCC Orders DA 97-2358 and FCC 97-158, as amended.
(This page filed under Transmittal No. 1959.)

6. Switched Access Service (Cont'd)

6.8 Rates and Charges (Cont'd)

6.8.3 Local Switching for Feature Groups (Cont'd)

(F) Switched Transport Termination Nonchargeable Options (Cont'd) Tx

(2) Trunk-Side Terminations

	FID
Operator Trunk, Full Feature Arrangement (available with FGD)	TTC FF

x Filed in compliance with FCC Orders DA 97-2358 and FCC 97-158, as amended.
(This page filed under Transmittal No. 1959.)

6. Switched Access Service (Cont'd)

6.8 Rates and Charges (Cont'd)

6.8.3 Local Switching (Cont'd) C

D

6. Switched Access Service (Cont'd)

6.8 Rates and Charges (Cont'd)

6.8.3 D

D

6. Switched Access Service (Cont'd)

6.8 Rates and Charges (Cont'd)

6.8.4

6.8.5 Local Switching for Access Arrangements

(A) Usage Sensitive Rates

Premium Rates	Rate Per Access Minute
LS1A - ALA and ATA-950 except for ALA and ATA-950 used to terminate traffic to a WAL provided from an equal access end office	$0.004393(I)
LS2D - ATA-10XXX, ALA and ATA-950 used to terminate traffic to a WAL provided from an equal access end office	$0.004393(I)
Non-Premium Rates	
Per access minute	0.001977(I)

Rates contained in this transmittal are subject to subsequent adjustment, effective retrospectively back to the transmittal's original effective date, in the event the Commission or a court subsequently authorizes Pacific to correct its rates pursuant to the decision in United States Telephone Association v. FCC (Case No. 97-1469)(slip. op. May 21, 1999)(D.C. Cir.), or pursuant to pending motions, or petitions for reconsideration or waiver, or in the event of any other adjustment pursuant to an order of the Commission or a court.

(This page filed under Transmittal No. 2075)

6. Switched Access Service (Cont'd)

6.8 Rates and Charges (Cont'd)

6.8.5 Local Switching for Access Arrangements (Cont'd)

(B) Common Switching Optional Features Used with Access Arrangements

	FID/USOC	Monthly Rate	Nonrecurring Charge	
Call Denial on line or Hunt Group (Available with ALA)	CAD/			
- Per Line	BEDCA	$0.50	None	
- Non-Premium Rate		0.23	None	
Service Code Denial on Line (Available with ALA)	SCD/			
- Per Line	SVCCD	0.50	None	
- Non-Premium Rate		0.23	None	
Hunt Group Arrangement (Available with ALA)	HML,HTG/			
- Per Line	MLHTG	0.15	None	
- Non-Premium Rate		0.07	None	
Hunt Group Arrangement for Use with WATS Access Lines (Available with ATA-101XXXX)				(C)
- Per WATS Access Line Group	HML,HTG	None	None	
Uniform Call Distribution (Available with ALA)				
- Per Line	UCD/CDUHT	2.65	None	
- Non-Premium Rate		1.19	None	

(This page is filed under Transmittal No. 1999)

6. Switched Access Service (Cont'd)

6.8 Rates and Charges (Cont'd)

6.8.5 Local Switching for Access Arrangements (Cont'd)

(B) Common Switching Optional Features Used with Access Arrangements (Cont'd)

	FID/USOC	Monthly Rate	Nonrecurring Charge	
Nonhunting Number for Use with Hunt Group or Uniform Call Distribution (Available with ALA)	NHN/			
- Per Line	MLHPT	None	None	
- Non-Premium Rate		None	None	
Automatic Number Identification (ANI) (Available with ATA-101XXXX and ATA-950)	ANI/			(C)
- Per Message	BEAN1	$0.00040	None	
Up-to-7-Digit Outpulsing of Access Digits to IC (available with ATA-950) - Per Transmission Path Group	USDO	None	None	
Cut-Through (Available with ATA-101XXXX) - Per End Office or Access Tandem	CTO	None	None	(C)
Service Class Routing (Available with ATA-101XXXX) - Per Transmission Path Group	SCRT	None	None	(C)
Answer Supervision - Lineside (Available with ALA) - Per Line	ANSPF	ICB	ICB	

6. Switched Access Service (Cont'd)

6.8 Rates and Charges (Cont'd)

6.8.5 Local Switching for Access Arrangements (Cont'd)

(B) Common Switching Optional Features Used with Access Arrangements (Cont'd)

	FID/USOC	Monthly Rate	Nonrecurring Charge	
Alternate Traffic Routing Multiple Customer Premises Alternate Routing (Available with ATA-950 and ATA-101XXXX)				(C)
- Per Transmission Path				
- Per Transmission Path Group	ARTG	None	None	
Alternate Traffic Routing End Office Alternate Routing When Ordered in Trunks (Available with ATA-950 and ATA-101XXXX)				
- Per Transmission Path				(C)
- Per Transmission Path Group	ARTG	None	None	
Trunk Access Limitation Arrangement (Available with ATA-101XXXX)				(C)
- Per End Office	CHOK	None	None	
Call Gapping Arrangement (Available with ATA-101XXXX)				(C)
- Per End Office	CGAP	None	None	
Band Advance Arrangement for Use with the WATS Access Line Service (available with ATA-101XXXX)				(C)
-Per Arrangement	BAAD	None	None	

6. Switched Access Service (Cont'd)

6.8 Rates and Charges (Cont'd)

6.8.5 Local Switching for Access Arrangements (Cont'd)

(B) Common Switching Optional Features Used with Access Arrangements (Cont'd)

	FID/USOC	Monthly Rate	Nonrecurring Charge	
End Office End User Line Service Screening for Use with originating only WATS Access Line Service* (available with ATA-101XXXX)				(C)
-Per WATS Access Line	BAND	None	None	
International Carrier Option (Available ith ATA-101XXXX)				(C)
- Per End Office and Access Tandem	INCO/	None	None	
Public Switched Digital Switching Service Capability (Available with ATA-101XXXX)				(C)
- Per Access Minute (For one minute or any fraction thereof, the charge of one access minute applies)		$0.12	None	
Uniform Call Distribution Arrangement for Use with WATS Access Lines (Available with ATA-101XXXX)				(C)
- Per WATS Access Line Group	HTY-UD/	None	None	

6. Switched Access Service (Cont'd)

6.8 Rates and Charges (Cont'd)

6.8.5 Local Switching for Access Arrangements (Cont'd)

(B) Common Switching Optional Features Used with Access Arrangements (Cont'd)

	FID/USOC	Monthly Rate	Nonrecurring Charge	
Nonhunting Number for Use with Hunt Group or Uniform Call Distribution Arrangement for Use with WATS Access Lines (Available with ATA-101XXXX)				(C)
- Per WATS Access Line	NHN	None	None	
LATA-Wide Terminating Access (Available with ATA-950) -Per Transmission Path or Transmission Path Group	LWTA			
Hunt Group - Overflow (Available with ALA)				
- Per Line	MLHOF	None	None	
- Non-Premium Rate		None	None	
Uniform Call Distribution with Queuing (Available with ALA)				
- Per Line	CDUQG	$ 0.70	None	
- Non-Premium Rate		0.32	None	
Hunt Group - C.O Announcement (Available with ALA)				
- Per Arrangement	MLHCO	$109.00	None	
- Non-Premium Rate		49.05	None	
Three Way Call Transfer (Available with ALA)				
- Per Line	TRC3W	0.05	None	
- Non-Premium Rate		0.02	None	

(This page filed under Transmittal No. 1999)

6. Switched Access Service (Cont'd)

6.8 Rates and Charges (Cont'd)

6.8.5 Local Switching for Access Arrangements (Cont'd)

(B) Common Switching Optional Features Used with Access Arrangements (Cont'd)

	USOC	Monthly Rates	Nonrecurring Charge
Make Busy Key - per arrangement	FCP89	$ 4.45	$127.00
Forwarded Call Information	FCLMF	250.00	585.00
Activate Message Waiting Indicator - Audible	MW1AD	250.00	406.00
Activate Message Waiting Indicator - Visual	MW1VS	250.00	480.00
Calling Party Number (CPN) - Per message	SLCPN	NONE	NONE
Charge Number (CN)** - Per message	SLCHG	0.00040	NONE
Carrier Selection Parameter (CSP)** - Per customer per switch	SLCSP	NONE	NONE
Access Transport Parameter (ATP)** - Per customer per switch		NONE	NONE
Calling Number Delivery via ICLID (Available with ALA)	XXXXX	NONE	NONE

** Available only with ATA-101XXXX with the CCSAC optional feature. (C)

(This Page is filed under Transmittal No. 1999)

6. Switched Access Service (Cont'd)

6.8 Rates and Charges (Cont'd)

6.8.5 Local Switching for Access Arrangements (Cont'd)

(C) Switched Transport Termination Options Used with Access Arrangements

	FID	
(1) Line-Side Terminations for ALA		
Two-Way Operation		
- Dial Pulse with Loop Start	NC +++A	
- Dial Pulse with Ground Start	NC +++E	
- DTMF with Loop Start	NC +++F	
- DTMF with Ground Start	NC +++G	
Terminating Operation		
- Dial Pulse with Loop Start	NC +++N	
- Dial Pulse with Ground Start	NC +++P	
- DTMF with Loop Start	NC +++R	
- DTMF with Ground Start	NC +++S	
Originating Operation		
- Loop Start	NC +++U	
- Ground Start	NC +++V	
(For ATA-950 and ATA-101XXXX)		(C)
Standard Trunk for Originating, Terminating or Two-Way operation	TTC SO	
(available with ATA-950	TTC ST	
and ATA-101XXXX)	TTC TY	(C)
Rotary-Dial Station Signaling Trunk (available with ATA-950)	TTC RD	
Operator Trunks - MOS Coin or Combined Coin and Non-Coin	TTC CO	
(available with ATA-101XXXX)	TTC CC	(C)
Operator Trunks - EAOSS (available with ATA-101XXXX)	TTC FF	(C)

(This page filed under Transmittal No. 1999)

6. Switched Access Service (Cont'd)

6.8 Rates and Charges (Cont'd)

6.8.5 Local Switching for Access Arrangements (Cont'd)

(C) Switched Transport Termination Options Used with Access Arrangements (Cont'd)

	FID	
(2) Trunk-side Terminations		
Operator Trunk, Full Feature Arrangement (Available with ATA-101XXXX)	TTC-FF	(C)

(D) Dedicated Network Access Link

	USOC	Monthly Rates	Nonrecurring Charge
(1) Transport Termination - Per Point of termination			
- Two-Wire	T6E2X	*	*
- Four-Wire	T6E4X	*	*
(2) Transport Mileage - over 0 miles			
- Fixed	1L5XX	**	**
- Per Mile	1L5XX	**	**
(3) Optional Features and Functions			
(a) Conditioning - Per Point of Termination - C-Type	X1CPT	***	***
- Improved Attenuation Distortion	UHW	***	***
- Improved Envelope Delay Distortion	UHY	***	***

* See section 7.5.3(A) following for Rates.
** See section 7.5.3(B) following for Rates.
*** See section 7.5.3(C) following for Rates.

(This page filed under Transmittal No. 1999)

6. Switched Access Service (Cont'd)

6.8 Rates and Charges (Cont'd)

6.8.5 Local Switching for Access Arrangements (Cont'd)

(D) Dedicated Network Access Link (Cont'd)

(3) Optional Features and Functions (Cont'd)

	USOC	Monthly Rates	Nonrecurring Charge
(b) Improved Termination			
Per Point of Termination			
- four-wire	1RL4W	*	*
(c) Improved Return Loss for Effective Two-wire Transmission			
Per Point of Termination			
- Two-wire	1RL2W	**	**
(d) Data Capability			
Per Point of Termination	XDCPT	***	***
(e) Signaling Capability			
Per Point of Termination	XSS++	****	****

Certain rates and regulations previously found this page can now be found on page 240.5.1.

* See section 7.5.3(C)(3) following for rates.
** See section 7.5.3(C)(4) following for rates.
*** See section 7.5.3(C)(7) following for rates.
**** See section 7.5.3(C)(9) following for rates.

6. Switched Access Service (Cont'd)

6.8 Rates and Charges (Cont'd)

	Per Originating Access Minute
6.8.6 Message Unit Credit	
(A) For all exchanges in the San Francisco-East Bay, and the Los Angeles extended area	($.0072)
(B) All other exchanges in California	($.0053)

6.8.7 Reserved

6.8.8 Information Surcharge

(A) Information Surcharge Rates

- Premium Rate Per Access Minute	$.000036(R)
- Non Premium Rate Per Access Minute	$.000016(R)

Rates contained in this transmittal are subject to subsequent adjustment, effective retrospectively back to the transmittal's original effective date, in the event the Commission or a court subsequently authorizes Pacific to correct its rates pursuant to the decision in United States Telephone Association v. FCC (Case No. 97-1469)(slip. op. May 21, 1999)(D.C. Cir.), or pursuant to pending motions, or petitions for reconsideration or waiver, or in the event of any other adjustment pursuant to an order of the Commission or a court.

(This page filed under Transmittal No. 2054)

6. Switched Access Service (Cont'd)

6.8 Rates and Charges (Cont'd)

6.8.9 Line Information Data Base (LIDB) Service

	USOC	Per Query Charge	Non-recurring Charge
(A) LIDB Service Establishment - Per Originating Point Code	ABSPB	None	$ 129.00
(B) LIDB Transport-Per Query		$.000270(R)	None
(C) LIDB Validation-Per Query		.021000	None
(D) LIDB OLNS Query		.012	None

6.8.10 SS7 Interconnection

	ZONE	USOC	Monthly Rate	Non-recurring Charge
(A) SS7 Link - Each	1	SL7	$ 195.50	$ 590.00
	2	SL7	195.00	590.00
	3	SL7	195.00	590.00
(B) SS7 Link - per mile	1	N/A	.60	-
	2	N/A	.60	-
	3	N/A	.60	-
(C) STP Port - each	1	N/A	998.00(R)	-
	2	N/A	998.00(R)	-
	3	N/A	998.00(R)	-

Rates contained in this transmittal are subject to subsequent adjustment, effective retrospectively back to the transmittal's original effective date, in the event the Commission or a court subsequently authorizes Pacific to correct its rates pursuant to the decision in United States Telephone Association v. FCC (Case No. 97-1469)(slip. op. May 21, 1999)(D.C. Cir.), or pursuant to pending motions, or petitions for reconsideration or waiver, or in the event of any other adjustment pursuant to an order of the Commission or a court.

(This page filed under Transmittal No. 2054)

6. Switched Access Service (Cont'd)

6.8 Rates and Charges (Cont'd)

6.8.11 DID Switched Access Service

	USOC	Monthly Rate	Nonrecurring Charge	
(A) DID PBX Trunk				M
- Per Individual trunk	TMN	37.65	304.00	
(B) DID Circuit Termination				
- Per individual trunk	TCT	7.55	None	
(C) Blocks of Telephone Numbers				
- per 100 numbers	ND8	0.05	304.00	
(D) Interoffice Mileage				
- Over 0 Miles				
- Fixed	1L5XX	*	*	
- Per mile	1L5XX	*	*	M
(E) DID Trunk Queuing				
1. DID Trunk Queuing with First Announcement - Per Arrangement	A1QUE	$105.95 R	$393.00	
2. Additional Announcement - Per Arrangement	A2QUE	12.80	27.00	
3. Queue Slots - Per Slot	QSLOT	.10	37.00	
4. DID Number Conditioning for Use with DID Trunk Queuing - Per Group of 20 Numbers	TKQNC	13.05 R	129.00	

Certain regulations on this page formerly appeared on page 240.8.
* See Section 7.5.3(B) following for rates and charges.

6. Switched Access Service (Cont'd)

6.8 Rates and Charges (Cont'd)

6.8.12 Toll Free Access

Basic Toll Free Access Query	Recurring Charges
- Per query	$0.003993(R)
POTS Translation	
- Per query	0.000000
Multiple Destination Routing	
- Per query	0.000463(R)
Six Digit Master Number List Turnaround	
- Per query	0.001500

6.8.13 Billing Name and Address (BNA) Service

	Rates
- Billing Name and Address Found, per listing	$0.30
- Billing Name and Address Not Found, per listing	0.29(R)

6.8.14 500 Access Service

	USOC	Nonrecurring Charges	
		1st	Additional
Activating/Deactivating Each NXX Per Central Office			
- Per Order	SACCH	$0.00	$0.00

Rates contained in this transmittal are subject to subsequent adjustment, effective retrospectively back to the transmittal's original effective date, in the event the Commission or a court subsequently authorizes Pacific to correct its rates pursuant to the decision in United States Telephone Association v. FCC (Case No. 97-1469)(slip. op. May 21, 1999)(D.C. Cir.), or pursuant to pending motions, or petitions for reconsideration or waiver, or in the event of any other adjustment pursuant to an order of the Commission or a court.

(This page filed under Transmittal No. 2054)

7. Special Access Service

Pursuant to Federal Communications Commission's Order in CC Docket No. 83-1145, Paragraphs 7.1 through 7.5 contain material which may differ from the material previously appearing in those paragraphs.

7.1 General

Special Access Service provides a transmission path to interconnect customer designated premises* either directly through a Telephone Company Wire Center or through a Telephone Company Hub where bridging or multiplexing functions are performed, or to connect a customer premises with SONET Ring and Access Services, or to connect a customer designated premises with a WATS serving office, or to connect a customer designated premises or an EIS Point of Termination to a Broadband Fast Packet Access Service port, or to connect a customer designated premises to an EIS Point of Termination. Special Access Services are ordered under the Access Order provisions set forth in Section 5. preceding.

The connections provided by Special Access Service can be either analog or digital. Analog connections are differentiated by spectrum and bandwidth. Digital connections are differentiated by bit rate.

7.1.1 Service Types

Each type of Special Access Service has its own characteristics. All are subdivided by one or more of the following:

- Transmission specifications,
- Bandwidth,
- Speed (i.e., bit rate),
- Spectrum

Customers can order a basic service and select, from a list of available features and functions and channel interfaces, those that they desire to meet specific communications requirements.

* Telephone Company Centrex CO-like switches, as well as, Broadband Fast Packet Services switches and ports, and Primary Rate ISDN (PRI) switches and ports includes in Public Packet Switching (PPS) service are considered to be customer premises for purposes of administering regulations and rates contained in this tariff. C C

7. Special Access Service (Cont'd)

7.1 General (Cont'd)

7.1.1 Service Types (Cont'd)

Each type of Special Access Service is identified in 7.2 following. Such identification is not intended to limit a customer's use of the service nor to imply that the service is limited to a particular use. For example, if a customer's equipment is capable of transmitting voice over a service that is identified as a Metallic Service in this tariff, there is no restriction against doing so.

PACIFIC BELL/UNIFORM ONA SERVICE NAME CROSS REFERENCE

The following is a list of Pacific Bell's Open Network Architecture (ONA) Basic Service Elements (BSEs) which provides a mapping from the feature name utilized in this tariff to the industry standard feature name. (Cont'd)

PACIFIC BELL	UNIFORM ONA SERVICE NAME	
Special Access Bridging	Bridging	
Conditioning	Conditioning	
Secondary Channel	Secondary Channel Capability	
Automatic Loop Transfer	Automatic Protection Switching	
Customer Network Reconfiguration*	Network Reconfiguration	
Access to Clear Channel Transmission	Access to Clear Channel Transmission	
Port Access to Verify Integrity of Subscriber Lines	Verify Integrity of Subscriber Lines	Nx Nx

x Issued on not less than 15 days' notice under authority of Special Permission No. 92-93 of the Federal Communications Commission.

7. Special Access Service (Cont'd)

7.1 General (Cont'd)

7.1.1 Service Types (Cont'd)

The customer has the option of ordering analog, digital high capacity or Fiber Advantage^{sm} facilities (i.e., 1.544 Mbps, 3.152 Mbps, 6.312 Mbps, 44.736 Mbps and 274.176 Mbps) to a Telephone Company Hub for multiplexing to individual channels of a lower capacity or bandwidth. Descriptions of the types of multiplexing available at the Hubs, as well as the number of individual channels which may be derived from each type of facility are set forth in 7.2 following. Additionally, the customer may specify optional features for the individual channels derived from the facility to further tailor the channel to meet specific communications requirements. Descriptions of the optional features and functions available are also set forth in 7.2 following. The customer may order N
SONET Ring and Access Services(i.e., 1.544 Mbps - 2.488 Gbps) |
as described in 7.2.11 following. N

7. Special Access Service (Cont'd)

7.1 General (Cont'd)

7.1.1 Service Types (Cont'd)

Cascading multiplexing occurs when a 3.152 Mbps facility is provided from a customer designated premises to a Telephone Company Hub for multiplexing to two 1.544 Mbps channels. The 1.544Mbps channels may be further multiplexed at the same or a different Hub to analog or digital channels or may be extended to other customer designated premises. Optional features may be added to either the high capacity service or to individually multiplexed channel(s). When ordering, the customer will specify the desired multiplexing Hub(s) selected from the NATIONAL EXCHANGE CARRIER ASSOCIATION, INC. TARIFF T
F.C.C. NO. 4.

End to end services may be provided on channels of these facilities to a Hub. The transmission performance for the end to end service provided between customer designated premises will be that of the lower capacity or bit rate. For example, when a 1.544 Mbps facility is multiplexed to voice frequency channels, the transmission performance of the channelized services will be Voice Grade, not High Capacity.

7. Special Access Service (Cont'd)

7.1 General (Cont'd)

7.1.2 Rate Categories

There are four basic rate categories which apply to Special Access Service:

Channel Terminations (described in 7.1.2(A) following)
Channel Mileage (described in 7.1.2(B) following)
Optional Features and Functions (described in 7.1.2(C) following)
SONET Ring and Access Services (described in 7.2.11) following).

In addition, a Special Access Surcharge and a message station equipment Recovery Charge may apply, as set forth in 7.4 following.

(A) Channel Termination

The Channel Termination rate category provides for the communications path between a customer designated premises and the serving wire center of that premises or for the communications path within a building which connects a customer's facilities with a customer designated premises without routing through a serving wire center. Included as part of the Channel Termination is a standard channel interface arrangement which defines the technical characteristics associated with the type of facilities to which the access service is to be connected at the Point of Termination (POT) and the type of signaling capability, if any. The signaling capability itself is provided as an optional feature as set forth in (E) following. One Channel Termination charge applies per customer designated premises at which the channel is terminated. For WATS Access Line Service, only one Channel Termination applies per service. This charge will apply even if the customer designated premises and the serving wire center are colocated in a Telephone Company building.

The SONET Ring and Access Service equivalent to a channel termination is the Local Loop Access Link as defined in 7.2.11(A)(4)(a) following. N | N

7. Special Access Service (Cont'd) Sx

7.1 General (Cont'd)

7.1.2 Rate Categories (Cont'd)

(A) Channel Termination (Cont'd) Sx

For a Special Access Generic Digital Transport Service or Cx
High Capacity Service connecting a customer designated Sx
premises to a Broadband Fast Packet Access Service as
described in Section 17, following, there will
be a charge for only one Channel Termination. Sx

x Reissued material to become effective on September 22, 1994.

7. Special Access Service (Cont'd)

7.1 General (Cont'd)

7.1.2 Rate Categories (Cont'd)

(B) Channel Mileage

The Channel Mileage rate category provides for the transmission facilities between the serving wire centers associated with two customer designated premises, between the serving wire centers associated with a customer designated premises and a Telephone Company Hub or between two Telephone Company Hubs. Channel mileage is portrayed in mileage bands. There are two rates that apply for each band: a fixed rate per band and a rate per mile.

Channel Mileage, associated with Special Access Services provided by the Telephone Company to connect a customer designated premises or EIS arrangement to a Frame Relay Service, ATM Cell Relay Service or Switched Multimegabit (N) Data Service, as described in Section 17, Broadband Fast (N) Packet Access Service, is not applicable under the (N) provisions of this service. When the customer orders High Capacity Service as described in Section 7.2.9(A) and 7.5.9 following, the Channel Mileage facility must be ordered in conjunction with an associated Channel Termination, as previously described in Section 7.1.2(A).

7. Special Access Service (Cont'd)
7.1 General (Cont'd)
7.1.2 Rate Categories (Cont'd)
(C) Optional Features and Functions

The Optional Features and Functions rate category provides for optional features and functions which may be added to a Special Access Service to improve its quality or utility to meet specific communications requirements. These are not necessarily identifiable with specific equipment, but rather characteristics may be obtained. These characteristics may be obtained by using various combinations of equipment. Although the equipment necessary to perform a specified function may be installed at various locations along the service, it will be charged for as a single rate element.

Examples of Optional Features and Functions that are available include, but are not limited to, the following:

- Signaling Capability
- Conditioning
- Bridging and/or multiplexing

Descriptions for each of the available Optional Features and Functions are set forth in 7.2 following.

(D) Collocation Transport (N)

Collocation Transport provides for the transmission facilities between collocation arrangements located in Telephone Company Central Offices.

There are two components of Collocation Transport.

(1) Inter/Intra Office Fixed

Inter/Intra office fixed rate element provides for The electronic equipment required to terminate a channel between two collocation arrangements located either in the same central office (intra) or in two separate central offices (inter).

When the Intra Office Fixed channel is ordered between two collocation arrangements that are for the same collocator, it will be provisioned as a temporary arrangement and will be in service until the collocator’s own facilities are installed, not to exceed 150 days. There is no additional charge to disconnect these temporary facilities.

(2) Inter Office Per Mile

The Per Mile charge provides for the electronic equipment and facilities necessary to provide the interoffice transport between two collocation arrangements. (N)

(This page filed under Transmittal No. 2099)

7. Special Access Service (Cont'd)

7.1 General (Cont'd)

7.1.3 Service Configurations

There are three types of service configurations over which Special Access Services are provided: two-point service, multipoint, and self healing ring configurations (SONET Ring and Access Services).

Customized technical specifications as set forth in Technical References listed in 7.2 following, will be provided when technically possible. If the Telephone Company determines that the requested characteristics are not compatible, the customer will be advised and given the opportunity to change the request.

Descriptions of service configurations are as follows.

(A) Two-Point Service

A two-point service interconnects two customer designated premises, or to connect a customer designated premises to an EIS point of termination, or connects a customer designated premises with a WATS serving office, or connects a customer designated premises to a Broadband Fast Packet Service port, either directly through a Telephone Company Wire Center or through a Telephone Company Hub where multiplexing functions are performed. T | T

7. Special Access Service (Cont'd)

7.1 General (Cont'd)

7.1.3 Service Configurations (Cont'd)

(A) Two-Point Service (Cont'd)

The following diagram depicts a two-point Voice Grade service connecting two customer designated premises located 15 miles apart. The service is provided with C-Type Conditioning as an Optional Feature.

Applicable rate elements are:

- Channel Terminations (2 applicable)*
- Channel Mileage (mileage band Over 8 to 25 miles)
- C-Type Conditioning Optional Feature (2 applicable)# T

In addition, a Special Access Surcharge and a Message Station Equipment Recovery Charge may apply, as set forth in 7.4. following.

Only one C-type Conditioning Optional Feature will apply for WATS Access N
Line Service as set forth in 7.2.3(E) following. N
* Only one Channel Termination will apply for WATS Access Line Service as seta T
forth in 7.2.3(E) following. T

7. Special Access Service (Cont'd)

7.1 General (Cont'd)

7.1.3 Service Configurations (Cont'd)

(B) Multipoint Service

Multipoint service connects three or more customer designated premises through a Telephone Company Hub. There is no limitation on the number of mid-links available with Multipoint service. However, when more than three mid-links are provided in tandem, the quality of the service may be degraded. A mid-link is a channel between Hubs (i.e., bridging locations). Only certain types of Special Access Service are provided as multipoint service. These are so designated in the Service Descriptions set forth in 7.2. following.

When ordering, the customer will specify the desired bridging Hubs selected from the NATIONAL EXCHANGE CARRIER T
ASSOCIATION TARIFF, INC. F.C.C. NO. 4. TARIFF F.C.C. NO. 4 T
identifies the type(s) of bridging functions which are available and the serving wire centers at which they are available.

7. Special Access Service (Cont'd)

7.1 General (Cont'd)

7.1.3 Service Configurations (Cont'd)

(B) Multipoint Service (Cont'd)

Example: Voice Grade multipoint service connecting four customer premises via two customer specified bridging hubs.

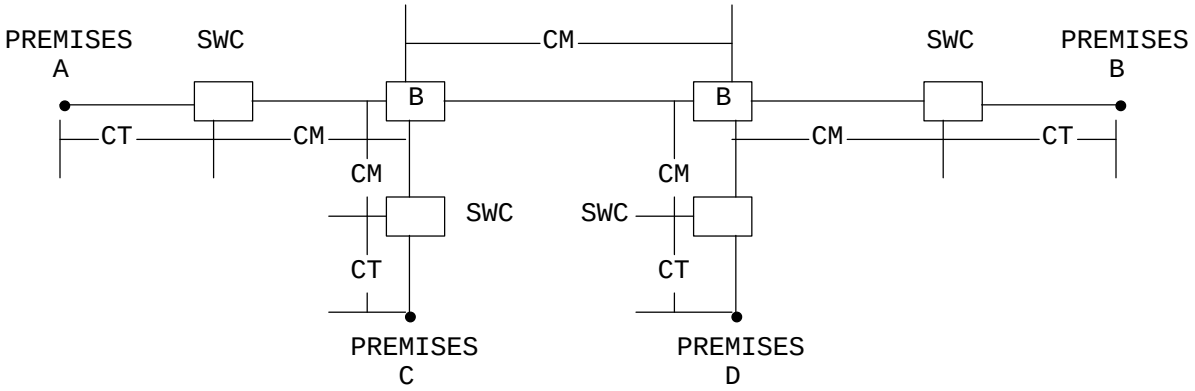

CT - CHANNEL TERMINATION
CM - CHANNEL MILEAGE Sx
B - BRIDGING HUB
SWC-SERVING WIRE CENTER

Applicable rate elements are:

- Channel Terminations (4 applicable)
- Channel Mileage (5 sections, each from appropriate mileage band)
- Bridging (6 applicable, i.e., each bridge port)

In addition, a Special Access Surcharge and a Message Station Equipment Recovery Charge may apply, as set forth in 7.4. following. Ny || Ny

y Issued on not less than 1 day's notice under authority of Special Permission No. 87-549 of the Federal Communications Commission.
x Reissued material effective September 19, 1987.

7. Special Access Service (Cont'd)

7.1 General (Cont'd)

7.1.3 Service Configuration (Cont'd)

(C) SONET Ring and Access Services: Dedicated Ring Service. C D C

The ring interconnects Telephone Company central offices or customer premises or combinations of both. The rings may interconnect to other Special Access Services. The customer subscribes to the full bandwidth capacity of the ring and designates the location and number of nodes. A node aggregates lower bandwidth capacities onto the ring facility. C

Rings are defined through use of interoffice or loop facilities in connecting CO Nodes and Premises Nodes. Dedicated rings may be configured using interoffice facilities connecting CO Nodes or using loop facilities connecting one or more Premises Node to a CO Node in a serving wire center. Dedicated rings may also be configured using both loop and interoffice facilities connecting one or more Premises nodes to multiple CO Nodes C C N

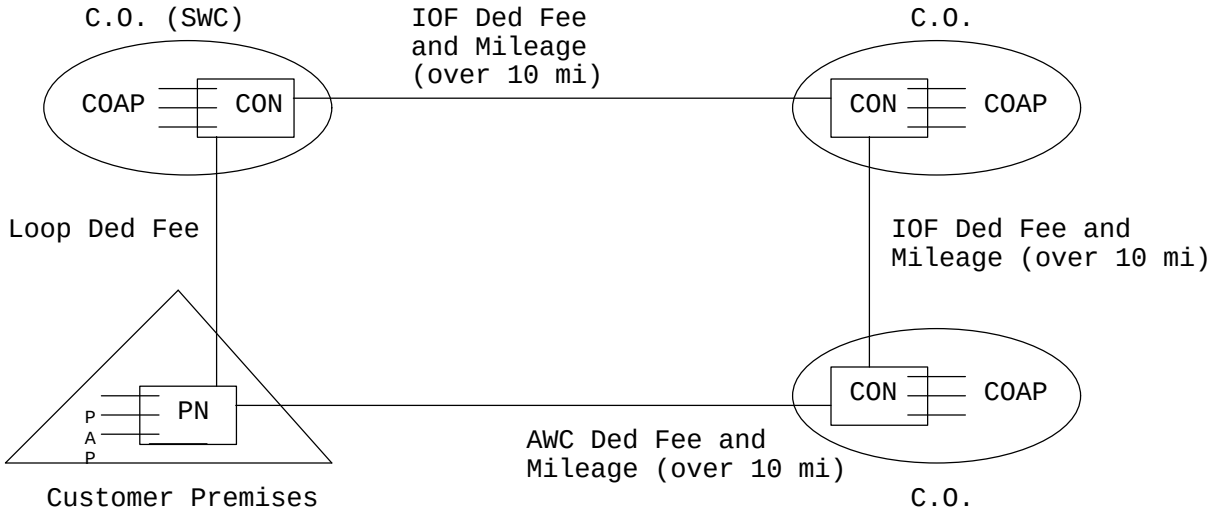

Legend:	Rate Elements:
PAP	Premises Access Port
PN	Premises Node
Loop Ded Fee	Dedicated Ring Fee - Local Loop
CON	Central Office Node
COAP	Central Office Access Port
IOF Ded Fee	Dedicated Ring Fee - Interoffice
Mileage	Mileage - Dedicated Ring (over 10 miles)
AWC Ded Fee	Dedicated Ring Fee - Alternate Wire Center

7. Special Access Service (Cont'd)

7.1 General (Cont'd)

7.1.3 Service Configurations (Cont'd)

D

D

7. Special Access Service (Cont'd)

7.1 General (Cont'd)

7.1.3 Service Configurations (Cont'd)

(E) SONET Ring and Access Services - Circuit Service Sy

In the circuit service the customer selects bandwidth capacity for an end to end circuit (two point). Local Loop Access Links designate bandwidth capacity and connect the customer's premises to the central office. In the central office the circuit service connects to an inter-office facility consisting of two C O Nodes and interoffice Mileage. At the distant end the customer subscribes to another Local Loop Access Link. Sy

x Issued on not less than 14 days' notice under authority of Special Permission No. 95-469 of the Federal Communications Commission.
y Reissued material to become effective May 12, 1995.

7. Special Access Service (Cont'd)

7.1 General (Cont'd)

D

D

Certain regulations previously found this page can now be found on pages 120.1 and 122.4.

7. Special Access Service (Cont'd)

7.1 General (Cont'd)

7.1.4 Acceptance Testing

At no additional charge, the Telephone Company will, at the customer's request, cooperatively test at the time of installation, the following parameters:

(A) For Voice Grade analog services, acceptance tests will include tests for loss, 3-tone slope, DC continuity, operational signaling, C-notched noise, and C-message noise when these parameters are applicable and specified in the order for service. Additionally, for Voice Grade Services, a balance (improved loss) test will be made if the customer has ordered the improved loss optional feature.

(B) For other analog services (i.e., Metallic, Telegraph, Program Audio, Video, Wideband Analog, Wideband Data, and WATS Access Line) and for digital services (i.e., Generic T
Digital Transport and High Capacity), acceptance tests T
will include tests for the parameters applicable to the service
as specified in the order for service.

In addition to the above tests, Additional Cooperative Acceptance Testing for Voice Grade Service to test other parameters, as described in 13.3.5(B) following, is available at the customer's request. All tests results will be made available to the customer upon request.

ACCESS SERVICE

7. Special Access Service (Cont'd)

7.1 General (Cont'd)

D

D

D

ACCESS SERVICE

7. Special Access Service (Cont'd)

7.2 Service Descriptions

For the purposes of ordering, the types of Special Access Service are:

Metallic (MT)	TR-NPL-000336	
Telegraph Grade(TG)	TR-NPL-000336	
Voice Grade (VG)	TR-NPL-000335, PUB 41004, Table 4	
- WATS Access Line (WAL)	TR-NPL-000334	
Program Audio (AP)	TR-NPL-000337	
Video (TV)	GR-338-CORE PUB L-720026-PB/NB	Cx
Wideband Analog (WA)	TR-NPL-000339	
Wideband Data (WD)	TR-NPL-000340	
Generic Digital Transport (GDT)	PUB 62507 and 62310 TR-NPL-000157 PUB L-780030-PB/NB, PUB L-780035-PB/NB, PUB L-780036-PB/NB, PUB L-780037-PB/NB, PUB L-780077-PB/NB	
High Capacity (HC)	PUB 62508 and 62411 PUB L-780059-PB	
Digital Data Over Voice Service Description and Technical Requirements for SONET Ring and Access Services	PUB L-780080-PB/NB PUB L-780046-PB/NV	

x Issued under authority of Special Permission No. 96-180 of the Federal Communications Commission.

7. Special Access Service (Cont'd)

7.2 Service Descriptions (Cont'd)

Each type consists of a basic service to which technical specifications (customized or predefined), channel interface(s), and, when desired, optional features and functions are added to construct the service desired by the customer. These specifications are set forth in Technical References listed above. The basic service, channel interfaces and optional features and functions are described in this section. Possible technical limitations may exist that affect the provisioning of services as shown in 7.2.1 and 7.2.2, depending on the availability of equipment and facilities. The Telephone Company will provide reasonable notification to the customer of any limitations that materially affect the operating characteristics of the special access service. (See 2.1.7 for information concerning changes and substitutions.) M

When a customized service is ordered the customer will be notified whether Additional Engineering Charges apply. In such cases, the customer will be given an estimate of the hours to be billed before any further action is taken on the order. M

Certain regulations on this page formerly appeared on Page 251.

7. Special Access Service (Cont'd)

7.2 Service Descriptions (Cont'd)

The Telephone Company will maintain existing transmission specifications on services installed prior to the effective date of this tariff. However, where performance specifications exceed the standard listed in this provision they will also be maintained at the performance levels specified in this tariff. All services installed after the effective date of this tariff will conform to the transmission specification standards contained in this tariff or in the Technical References for each category of service set forth in 7.2 preceding. T T T T

Certain regulations previously found on this page can now be found on page 251.

ACCESS SERVICE

7. Special Access Service (Cont'd)

7.2 Service Descriptions (Cont'd)

7.2.1 Metallic Service

(A) Basic Service Description

A Metallic service is an unconditioned two-wire channel capable of transmitting low speed varying signals at rates up to 30 baud. This service is provided by metallic or equivalent facilities. Metallic services are provided between customer designated premises through serving Wire Centers, between a customer designated premises and a C
Telephone Company Hub where bridging functions are
performed, between a customer premises and an EIS Point of C
Termination, or between an EIS Point of Termination and a
Telephone Company Hub where bridging functions are
performed. Inter office metallic facilities will be C
limited in length to a total of five miles per circuit.

(B) Technical Specifications

Technical specifications and examples of application are set forth in Technical References TR-NPL-000336.

7. Special Access Service (Cont'd)

7.2 Service Descriptions (Cont'd)

7.2.1 Metallic Service

(C) Channel Interfaces

Compatible channel interfaces are set forth in Technical Reference TR-NPL-000336. C

(D) Optional Features and Functions

(1) Central Office Bridging Capability

(a) Three Premises Bridging - Provision of tip-to-tip and ring-to-ring connection in a central office of a metallic pair to a third customer designated premises.

(b) Series Bridging of up to 26 customer designated premises.

The following table shows the services with which the optional features and functions are available.

	Available with Technical Specifications Package MT-			
	C	1	2	3
Three Premises Bridging	X	X		X
Series Bridging	X		X	

7. Special Access Service (Cont'd)

7.2 Service Descriptions (Cont'd)

7.2.2 Telegraph Grade Service

(A) Basic Service Description

A Telegraph Grade service is an unconditioned channel capable of transmitting binary signals at rates of 0-75 baud or 0-150 baud. This service is furnished for half-duplex or duplex operation. Telegraph Grade services are provided between customer designated premises through Serving Wire Center(s), between a customer designated premises and a Telephone Company Hub, between a customer premises and an EIS Point of Termination, or between an EIS Point of Termination and a Telephone Company Hub. C C

(B) Technical Specifications

Technical specifications and examples of application are set forth in Technical Reference TR-NPL-000336.

(C) Channel Interfaces

Compatible channel interfaces are set forth in Technical Reference TR-NPL-000336.

(D) Optional Features and Functions

(1) Telegraph Bridging (two-wire and four-wire)

The following table shows the services with which the optional features and functions are available.

	Available with Technical Specifications Package TG-		
	C	1	2
Telegraph Bridging	X	X	X

7. Special Access Service (Cont'd)

7.2 Service Descriptions (Cont'd)

7.2.3 Voice Grade Service

(A) Basic Service Description

A Voice Grade Service provides voice frequency transmission capability in the nominal frequency range of 300 to 3000 Hz and may be terminated two-wire or four-wire. Voice Grade Services are provided between customer designated premises through Serving Wire Centers, between a customer designated premises and a Telephone Company Hub, between C
a customer premises and an EIS Point of Termination, or
between an EIS Point of Termination and a Telephone
Company Hub. The Telephone Company provides Voice Grade C
Services 1 through 12 and customized service upon customer request.

(B) Technical Specifications

The technical specifications for these parameters (except for dropouts, gain hits, and phase hits) are set forth in Technical Reference TR-NPL-000335. The technical specifications for dropouts, phase hits, and gain hits are set forth in Technical Reference PUB 41004, Table 4.

7. Special Access Service (Cont'd)

7.2 Service Descriptions (Cont'd)

7.2.3 Voice Grade Service (Cont'd)

(C) Channel Interfaces

D
D

Compatible channel interfaces are set forth in Technical Reference TR-NPL-000335.

(D) Optional Features and Functions

(1) Central Office Bridging Capability

(a) Voice Bridging (two-wire and four-wire)

(b) Data Bridging (two-wire and four-wire)

(c) Telephoto Bridging (two-wire and four-wire)

(d) DATAPHONE Select-A-Station Bridging with sequential arrangement ports or addressable arrangement ports

Certain regulations previously found on this page can now be found on page 256.

7. Special Access Service (Cont'd)

7.2 Service Descriptions (Cont'd)

7.2.3 Voice Grade Service (Cont'd)

(D) Optional Features and Functions (Cont'd)

(1) Central Office Bridging Capability (Cont'd)

(e) Telemetry and Alarm Bridging

Split Band, Active Bridging
Passive Bridging
Summation, Active Bridging

(2) Central Office Multiplexing

Voice to Telegraph Grade: An arrangement that converts a Voice Grade channel to Telegraph Grade channels using frequency division multiplexing.

(3) Conditioning

Conditioning provides more specific transmission characteristics for Voice Grade services. Sx

In addition, a customer may desire that either the attenuation distortion or the envelope delay distortion, or both, be improved to more stringent specifications than those provided for standard C-Type conditioning. In such cases the customer has the option of ordering either Improved Attenuation Distortion or Improved Envelope Delay Distortion, or both, as desired. Sy

y Issued on not less than 6 day's notice under authority of Special Permission No. 87-504 of the Federal Communications Commission to defer the effective date from August 30, 1987 to November 28, 1987.
x Reissued material to become effective September 19, 1987.

7. Special Access Service (Cont'd)

7.2 Service Descriptions (Cont'd)

7.2.3 Voice Grade Service (Cont'd)

(D) Optional Features and Functions (Cont'd)

(3) Conditioning (Cont'd)

For two-point services, the parameters apply to each service. For multipoint services, the parameters apply to each mid link or end link. C-Type conditioning and Data Capability may be combined on the same service. Sy

y Issued on not less than 6 day's notice under authority of Special Permission No. 87-504 of the Federal Communications Commission to defer the effective date from August 30, 1987 to November 28, 1987.

7. Special Access Service (Cont'd)

7.2 Service Descriptions (Cont'd)

7.2.3 Voice Grade Service (Cont'd)

(D) Optional Features and Functions (Cont'd)

(3) Conditioning (Cont'd)

(a) C-Type Conditioning

C-Type Conditioning is provided for the additional control of attenuation distortion and envelope delay distortion on data services. The attenuation distortion and envelope delay distortion specifications for C-Type Conditioning are:

Attenuation Distortion (Frequency Response) Relative to 1004 Hz

Frequency Range (Hz)	Variation (dB)	
504-2804	-1.0 to +3.0	Sy
304-3004	-2.0 to +6.0	Sy

Envelope Delay Distortion

Frequency Range (Hz)	Variation (micro-seconds)	
1004-2604	500	Sy
604-2604	1500	‖
504-2804	3000	Sy

y Issued on not less than 6 day's notice under authority of Special Permission No. 87-504 of the Federal Communications Commission to defer the effective date from August 30, 1987 to November 28, 1987.

7. Special Access Service (Cont'd)

7.2 Service Descriptions (Cont'd)

7.2.3 Voice Grade Service (Cont'd)

(D) Optional Features and Functions (Cont'd)

(3) Conditioning (Cont'd)

(b) Improved Attenuation Distortion Sy

Improved attenuation distortion is provided for additional control of attenuation distortion. The improved attenuation distortion specifications are:

Attenuation Distortion
(Frequency Response)
Relative to 1004 Hz

Frequency Range (Hz)	Variation (dB)
504-2804	-1.0 to +2.0
304-3004	-1.0 to +3.0
3004-3204	-2.0 to +6.0

(c) Improved Envelope Delay Distortion

Improved envelope delay distortion is provided for additional control of envelope delay distortion. The improved envelope delay distortion specifications are:

Envelope Delay Distortion

Frequency Range (Hz)	Variation (micro-seconds)
1004-2604	100
804-2604	200
604-2604	300
504-2804	600
504-3004	3000

Sy

y Issued on not less than 6 day's notice under authority of Special Permission No. 87-504 of the Federal Communications Commission to defer the effective date from August 30, 1987 to November 28, 1987.

7. Special Access Service (Cont'd)

7.2 Service Descriptions (Cont'd)

7.2.3 Voice Grade Service (Cont'd)

(D) Optional Features and Functions (Cont'd)

(3) Conditioning (Cont'd)

(d) Sealing Current Conditioning T

Sealing Current Conditioning is provided to help maintain continuity on dry metallic loops. It is usually associated with four-wire DA or NO type channel interfaces.

7. Special Access Service (Cont'd)

7.2 Service Descriptions (Cont'd)

7.2.3 Voice Grade Service (Cont'd)

(D) Optional Features and Functions (Cont'd)

(4) Customer Specified Premises Receive Level

This option allows the customer to specify the receive or transmit level at the Point of Termination. The level must be within a specific range on four-wire or on effective four-wire transmission. The ranges are set forth in Technical Reference TR-NPL-000335. T

7. Special Access Service (Cont'd)

7.2 Service Descriptions (Cont'd)

7.2.3 Voice Grade Service (Cont'd)

(D) Optional Features and Functions (Cont'd)

(5) Improved Termination T

On effective Four-Wire Transmission at Four-Wire Point T
of Termination (applicable to each two-wire port):
Provides for a fixed 600 ohm impedance, variable level
range and simplex reversal if specified. Telephone T
Company equipment is required at the customer's
premises where this option is ordered. The Improved
Termination parameters are set forth in Technical T
Reference TR-NPL-000335.

(6) Improved Return Loss T

On effective Two-Wire Transmission at Two-Wire Point T
of Termination: Provides for more stringent Echo
Control Specifications. In order for this option to be
applicable, the transmission path must be four-wire at
one POT and two-wire at the other POT. Placement of
Telephone Company equipment may be required at the
customer's premises with the two-wire POT. The
Improved Return Loss parameters are set forth in
Technical Reference TR-NPL-000335.

(7) Data Capability T

Data Capability provides transmission characteristics
suitable for data communications. Specifically, Data
Capability provides for the control of Signal to
C-Notched Noise Ratio and intermodulation distortion.
It is available for two-point services or multipoint
services.

When a service equipped with Data Capability is used
for voice communications, the quality of the voice
transmission may not be satisfactory.

7. Special Access Service (Cont'd)

7.2 Service Descriptions (Cont'd)

7.2.3 Voice Grade Service (Cont'd)

(D) Optional Features and Functions (Cont'd)

(8) Telephoto Capability T

Telephoto Capability provides transmission characteristics suitable for telephotographic communications. Specifically Telephoto Capability is provided for the control of attenuation distortion and envelope delay distortion on telephotographic services.

7. Special Access Service (Cont'd)

7.2 Service Descriptions (Cont'd)

7.2.3 Voice Grade Service (Cont'd)

(D) Optional Features and Functions (Cont'd)

(9) Signaling Capability

Signaling Capability provides for the process by which one customer premises alerts another customer premises on the same service with which it wishes to communicate.

(10) Selective Signaling Arrangement

An arrangement that permits code selective ringing for up to ten codes on a multipoint service.

(11) Transfer Arrangement

An arrangement that affords the customer an additional measure of flexibility in the use of their access service(s). The arrangement can be utilized to transfer a leg of a Special Access Service to another channel that terminates in either the same or a different customer premises. A key activated or dial-up control service is required to operate the transfer arrangement. A spare channel, if required, is not included as part of the option.

(12) Simplex Reversal

An arrangement that permits the simplex DC path to be reversed at the four-wire POT.

x Issued on not less than 4 days' notice under authority of Special Permission No. 90-1323 of the Federal Communications Commission to defer the effective date from January 1, 1991 to February 1, 1991.

7. Special Access Service (Cont'd)

7.2 Service Descriptions (Cont'd)

7.2.3 Voice Grade Service (Cont'd)

(D) Optional Features and Functions (Cont'd)

(13) ELEPL 2

ELEPL 2 (Equal Level Echo Path Loss 2) is an arrangement that establishes Echo Path Loss (EPL) values dependent on the transmitting and receiving Transmission Level Points (TLPs) at each test location. ELEPL is the difference in the level specified as the receive TLP and the measured echo level at the same point when the transmit test level is the same as the transmit TLP. ELEPL = EPL - TLP (transmit) + TLP (receive). ELEPL 2 parameters are specified in Technical Reference TR-NPL-000335. Sx Sx

x Issued on not less than 4 days' notice under authority of Special Permission No. 90-1323 of the Federal Communications Commission to defer the effective date from January 1, 1991 to February 1, 1991.

7. Special Access Service (Cont'd)

7.2 Service Descriptions (Cont'd)

7.2.3 Voice Grade Service (Cont'd)

(D) Optional Features and Functions (Cont'd)

(14) Port Access to Verify Integrity of Subscriber Lines - BSE

(a) Description

Port Access to Verify Integrity of Subscriber Lines (PAVISL) provides the ability for a service provider to monitor the service provider's client's single party exchange access line. The service provider is connected to a Telephone Company host computer via Special Access Voice Grade 10 services. The host computer provides C access to a scanning device which is used to repetitively poll the client's Subscriber Terminal Unit (STU). The STU is connected to alarm or monitoring sensors to detect a change in status of the client's exchange access line. The status of the Client's exchange access line is then transmitted back to the host computer access port to the service provider's analog data connection. The host computer port access is limited on a first come first serve basis. PAVISL is offered only where equipment and facilities are compatible and available. This service provider's client must also order the Telephone Company's local exchange service known as PollStar^{sm}.

7. Special Access Service (Cont'd)

7.2 Service Descriptions (Cont'd)

7.2.3 Voice Grade Service (Cont'd)

(D) Optional Features and Functions (Cont'd)

(14) Port Access to Verify Integrity of Subscriber Lines - BSE (Cont'd)

(b) Conditions

1. The availability of this service isconditional upon the provision of an alarm orother type of warning sensor from an alarmcompany.

2. The alarm company will provide a minimum oftwo 4-wire data voice grade channels betweenthe alarm company's premises and theCompany's premises. These will be providedin a two-point configuration at standardtariff rates.

3. The alarm company will provide equipment oneach 4-wire data voice grade channel. Theterminal equipment located at the premises ofthe alarm company and their patron isrequired to be compatible with the Company'sequipment, and the alarm company's terminalunit.

(15) Multiplexer Cross Connect Sx

This arrangement is available only as a cross-connect of one channel of a Special Access High Capacity DS1 multiplexer to one channel of another Special Access High Capacity DS1 multiplexer. The customer must provide system and channel assignment information. All channel mileage charges will also apply. Sx

x Issued on not less than 1 days' notice under authority of Special Permission No. 94-914 of the Federal Communications Commission to advance the effective date from August 20, 1994 to August 9, 1994.

ACCESS SERVICE

7. Special Access Service (Cont'd)

7.2 Service Descriptions (Cont'd)

7.2.3 Voice Grade Service (Cont'd)

(D) Optional Features and Functions (Cont'd)

The following table shows the services with which the optional features and functions are available.

	Available with Technical Specifications Package VG-													
	C	1	2	3	4	5	6	7	8	9	10	11	12	
C-Type Conditioning	X					X	X	X	X	X	X			
Central Office Bridging Capability	X		X			X	X				X	X		
Central Office Multiplexing	X						X							
Customer Specified Premises Receive Level	X		X	X				X	X	X				
Data Capability	X						X	X			X			
ELEPL 2	X	X	X	X		X		X						Sx
Improved Attenuation Distortion	X					X	X	X	X	X	X			
Improved Envelope Delay Distortion	X					X	X	X	X	X	X			
Improved Termination	X	X	X	X	X	X	X	X	X	X	X	X	X	
Improved Return Loss For Effective Two-Wire Transmission	X		X	X				X						

x Issued on not less than 4 days' notice under authority of Special Permission No. 90-1323 of the Federal Communications Commission to defer the effective date from January 1, 1991 to February 1, 1991.

7. Special Access Service (Cont'd)

7.2 Service Descriptions (Cont'd)

7.2.3 Voice Grade Service (Cont'd)

(D) Optional Features and Functions (Cont'd)

The following table shows the services with which the optional features and functions are available.

	Available with Technical Specifications Package VG-													
	C	1	2	3	4	5	6	7	8	9	10	11	12	
PPSN Interface Arrangement	X										X			
Sealing Current Conditioning	X					X	X				X			
Selective Signaling Arrangement	X		X											
Signaling Capability	X	X	X	X				X	X	X				
Simplex Reversal	X	X	X	X				X	X	X				
Telephoto Capability	X											X		
Transfer Arrangement	X	X	X	X	X	X	X	X	X	X	X	X		
Multiplexer Cross Connect	X	X	X	X	X	X	X	X	X	X	X	X		Sx

x Issued on not less than 1 day's notice under authority of Special Permission No. 94-914 of the Federal Communications Commission to advance the effective date from August 20, 1994 to August 9, 1994.

7. Special Access Service (Cont'd)

7.2 Service Descriptions (Cont'd)

7.2.3 Voice Grade Service (Cont'd)

(E) WATS Access Line (WAL) Service

(1) Basic Service Description Sx

A WATS Access Line Service provides a service for voice frequency transmission capability. The service provides a connection between a customer designated premises and a WATS serving office associated with the closed end of 800 Service or WATS. Originating access is provided with Feature Group C or D Switched Access Service as set forth in Section 6 preceding. For provisioning of originating WATS Access Line Service from a Telephone Company end office which has not been converted to equal access, see 7.4.11, following. Terminating access is provided with Feature Group A, B,C or D as set forth in Section 6 preceding. Sx Ny Ny

WAL service can be arranged for screening, blocking and directionality at the option of the customer and where available. It is provided with either rotary dial or dual tone multifrequency address signaling and either loop start, ground start, E&M, or reverse battery supervisory signaling. The choice of the type of signaling is at the option of the customer and subject to the technical limitations identified in the Technical Reference TR-NPL-000334. WATS Access Line Service is provided as an effective two-wire, or an effective four-wire transmission path.

WAL Service is provided for interstate Communications only. All originating intrastate calls will be blocked, as approved by the California Public Utilities Commission in Resolution No. T-12009, dated March 6, 1987. For further information refer to Pacific Bell Schedule Cal.P.U.C. Nos. A7. and 175-T.

y Issued on not less than 1 day's notice under authority of Special Permission No. 87-549 of the Federal Communications Commission.
x Reissued material effective September 19, 1987.

7. Special Access Service (Cont'd)

7.2 Service Descriptions (Cont'd)

7.2.3 Voice Grade Service (Cont'd)

(E) WATS Access Line (WAL) Service (Cont'd)

(1) Basic Service Description (Cont'd)

The following diagram depicts a WATS Access Line service. N

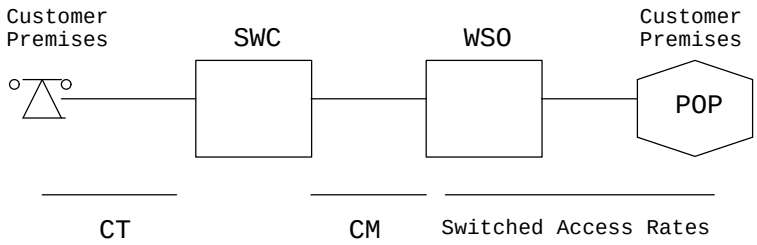

CT - Channel Termination
CM - Channel Mileage
SWC - Serving Wire Center
WSO - WATS Serving Office
POP - Point of Presence

Applicable Rate elements are:

CT - Channel Termination (1 applicable)
CM - Channel Mileage
- Optional Features and Functions when ordered (per channel termination). N

(2) Technical Specifications

Technical specifications and examples of application are delineated in Technical Reference TR-NPL-000334.

Certain regulations previously found on this page can now be found on Page 263.5.

7. Special Access Service (Cont'd)

7.2 Service Descriptions (Cont'd)

7.2.3 Voice Grade Service (Cont'd)

(E) WATS Access Line (WAL) Service (Cont'd)

(3) Channel Interfaces M

Compatible channel interfaces are set forth in Technical Reference TR-NPL-000334.

(4) Optional Features and Functions

(a) Improved two-wire voice transmission specifications

(b) Certain other options associated with WAL services are as either Line Termination or Common Switching optional features as defined in Section 6 preceding.

(c) WATS Access Lines use the same Features and Functions as Voice Grade Service. M

The following table shows the services with which the Optional Features and Functions are available. N

	Available with Technical Specifications Package WALS-					
	EA	EB	ED	EG	FA	FJ
Effective 2-Wire	X				X	X
Effective 4-Wire		X		X		
Improved 2-Wire					X	X
Improved Attenuation Distortion					X	X
Improved Return Loss 2-Wire						X
Digital DS1			X			
Bridging Capability	X	X		X	X	X

N

Certain regulations on this page formerly appeared on Page 263.4.

7. Special Access Service (Cont'd)

7.2 Service Descriptions (Cont'd)

7.2.4 Program Audio Service

(A) Basic Service Description

A Program Audio service is measured in Hz for the transmission of a complex signal voltage. The actual bandwidth is a function of the channel interface selected by the customer. Only one-way transmission is provided. Program Audio services are provided between customer designated premises through Serving Wire Center(s) or between a customer designated premises and a Telephone Company Hub.

(B) Technical Specifications

The technical specifications are set forth in Technical Reference TR-NPL-000337. C

(C) Channel Interfaces

Compatible channel interfaces are set forth in Technical Reference TR-NPL-000337. C

7. Special Access Service (Cont'd)

7.2 Service Descriptions (Cont'd)

7.2.4 Program Audio Service (Cont'd)

D

D

(D) Optional Features and Functions

(1) Central Office Bridging Capability

Distribution Amplifier

(2) Gain Conditioning

Control of 1004 Hz AML at initiation of service to 0dB ± 0.5 dB.

(3) Stereo

Provision of a pair of gain/phase equalized channels for stereo applications. (Additional AP channel must be ordered separately.)

The following table shows the services with which the optional features and functions are available. T

	Available with Technical Specifications Package AP-				
	C	1	2	3	4
Central Office Bridging Capability	X	X	X	X	X
Gain Conditioning	X	X	X	X	X
Stereo	X				X

Certain regulations previously found on this page can now be found on page 264.

7. Special Access Service (Cont'd)

7.2 Service Descriptions (Cont'd)

7.2.4 Program Audio Service (Cont'd)

(D) Optional Features and Functions (Cont'd)

(4) Hubbing Arrangement

At the request of the customer, the Full-time and/or Part-time services provided to the Hub may be connected together in the following configurations:

- Full-time to Full-time
- Full-time to Part-time
- Part-time to Part-time

D

7. Special Access Service (Cont'd)

7.2 Service Descriptions (Cont'd)

7.2.5 Video Service

(A) Basic Service Description

A Video service provides one-way transmission capability for a standard 525 line/60 field monochrome, or National Television Systems Committee color, video signal and one or more audio signals as described below. The provision and the bandwidth of the associated audio signal(s) is a function of the channel interface selected by the customer. Video services are provided between customer designated premises through Serving Wire Center(s) or between a customer designated premises and a Telephone Company Hub. Analog Video Service is also provided between an EIS Point of Termination and a customer designated premises or between an EIS Point of Termination and a Telephone Company Hub. N N Service is provided as Analog Video Service or Advanced Video Service.

(1) Analog Video Service

The bandwidth for analog video service is either 30 Hz to 4.5 Mhz or 30 Hz to 6.6 MHz. The associated audio signal(s) may be either duplexed or provided as one to four separate channels.

(2) Advanced Video Service

(a) Advanced Broadcast Video Service

Advanced Broadcast Video Service (ABVS) is the receipt or hand-off of a digitized video signal to/from the network interface. The bit rate for digital video service is 45 Mbps. One to four associated audio signal(s) may be provided at 15 kHz. ABVS may not be mixed with Analog Video Service.

ABVS will be provided with or without Telephone Company provided video enabling equipment at the network interface. Every Special Access Advanced Broadcast Video Service requires at least one channel termination that specifies customer baseband network interface, which includes Telephone Company provided video enabling equipment.

7. Special Access Service (Cont'd)

7.2 Service Descriptions (Cont'd)

7.2.5 Video Service (Cont'd)

(A) Basic Service Description (Cont'd)

(2) Advanced Video Service (Cont'd)

(b) Component Digital Video Service

Component Digital Video Service is the receipt or hand-off of a digitized video to/from the network interface utilizing component video methodology. The bit rate for component digital video service is 45 Mbps. One to eight associated audio channel signal(s) may be provided at 15 kHz. Component Digital Video Service may not be mixed with Analog Video Service. Component Digital Video Service may also be connected with one or more Advanced Broadcast Video Service TVD channel terminations at a Telephone Company Hub.

Component Digital Video Service is provided between a customer designated premises and a Telephone Company Hub.

Component Digital Video Service will be provided with Telephone Company provided video enabling equipment at the network interface.

(c) AVS-270 (N)

AVS-270 provides the transmission of real time transport of component digital video, along with enhanced digital or analog audio in an uncompressed format yielding the highest quality signaling.

AVS-270 provides a Video Switch and Access Gateway (VAG) platform to eliminate compatibility issues. VAG allows other video related offerings on the single network, from basic analog services up to complex component digital video schemes, and provides the ability to offer customer controlled switching. Optional features and functions are in Section 7.2.5(D) following. (N)

(This page filed under Transmittal No. 2004)

7. Special Access Service (Cont'd)

7.2 Service Descriptions (Cont'd)

7.2.5 Video Service (Cont'd)

(A) Basic Service Description (Cont'd)

(2) Advanced Video Service (Cont'd)

(c) AVS-270 (Cont'd)
AVS-270 is provided where facilities are available. Where facilities are not available, Special Construction may apply as specified in Section 5.1.3.

(B) Technical Specifications

The technical specifications are set forth in Technical Reference GR-338-CORE and L-7200026 PB/NB.

(C) Channel Interfaces

Compatible channel interfaces are set forth in Technical Reference GR-338-CORE and L-720026 PB/NB.

(D) Service to Service Through Connect – TV-1 & AVS-270 (N)

The Service to Service Through Connect Arrangement rate element provides for a permanent connection of like services in one of four Telephone Company Video Hubs. These Hubs are all located in California in the following cities: Los Angeles, San Francisco, San Diego and Sacramento. The customer billed for the through connect arrangement will be responsible for all billing associated with the interconnection. (N)

(E) Optional Features and Functions (T)

(1) NTSC Analog Interface - AVS-270

This interface is available with AVS-270 and provides customers with the ability to handoff a standard analog NTSC interface as set forth in the Technical (C)
Reference L-720026. (C)

(This page filed under Transmittal No. 2058)

7. Special Access Service (Cont'd)

7.2 Service Descriptions (Cont'd)

7.2.5 Video Service (Cont'd)

(E) Optional Features and Functions (Cont'd) (T)

(2) Virtual Studio - AVS-270

The Virtual Studio is available with AVS-270 and provides customers with a collection of features that, (C) at the option of the customer, are included in their transport stream. 1) T1 data channel; 2) Machine Control that enables remote control of Video Tape Recorders, graphics and other video composition equipment; 3) Time Control that enables number stamping of video frames; and 4) a Talk-Back Channel to provide intercom capabilities. (C)

(3) Hubbing Arrangement
At the request of the customer, the Full-time and/or Part-time services provided to the Hub may be connected together in the following configurations:

- Full-time to Full-time
- Full-time to Part-time
- Part-time to Part-time

Hubbing arrangments will be provided on an analog-to-analog or digital-to-digital basis only.

The Access Order Charge as described in Section 5.2.1(A)(N) (2), will be waived to all orders associated with hubbing arrangments.

(4) Video Access Gateway
The Video Access Gateway (VAG) allows connectivity between AVS-270 and other video services including TV-1, ABVS and AVS-CD. The VAG provides a common platform in the Telephone Company's video hub. The VAG allows the customer via a Codec to connect between unlike services. (N)

(This page filed under Transmittal No. 2058)

7. Special Access Service (Cont'd)

7.2 Service Descriptions (Cont'd)

7.2.5 Video Service (Cont'd)

(E) Optional Features and Functions (Cont'd) (N)

(4) Video Access Gateway (Cont'd)

The VAG is offered on a "dedicated" or a "shared" basis. The dedicated VAG is reserved on a full time basis for the specific customer ordering this service. The shared VAG is scheduled on an availability basis, and usage is charged by 30 minute intervals. The Access Order Charge as described in Section 5.2.1(A)(2), will be waived to orders associated with the shared Video Access Gateway. (N)

(This page filed under Transmittal No. 2058)

7. Special Access Service (Cont'd)

7.2 Service Descriptions (Cont'd)

7.2.6 Wideband Analog Service

(A) Basic Service Description

A Wideband Analog service provides a bandwidth measured in kHz for the transmission of a wideband signal. The actual bandwidth is a function of the channel interface selected by the customer. Wideband Analog services are provided between customer designated premises through Serving Wire Center(s) or between a customer designated premises and a Telephone Company Hub.

(B) Technical Specifications

The technical specifications are set forth in Technical Reference TR-NPL-000339. C

7. Special Access Service (Cont'd)

7.2 Service Descriptions (Cont'd)

7.2.6 Wideband Analog Service (Cont'd)

(C) Channel Interfaces

Compatible channel interfaces are set forth in Technical Reference TR-NPL-000339. C

(D) Optional Features and Functions

(1) Central Office Multiplexing

(a) Mastergroup to Supergroup

An arrangement that converts a Mastergroup channel to ten Supergroup channels using frequency division multiplexing.

(b) Supergroup to Group

An arrangement that converts a Supergroup channel to five Group channels using frequency division multiplexing.

(c) Group to Voice

An arrangement that converts a Group channel to twelve Voice Grade channels using frequency division multiplexing.

7. Special Access Service (Cont'd)

7.2 Service Descriptions (Cont'd)

7.2.6 Wideband Analog Service (Cont'd)

(D) Optional Features and Functions (Cont'd)

(1) Central Office Multiplexing (Cont'd)

(d) Group to DS1

An arrangement that converts two Group channels to a DS1 channel using analog to digital conversion.

The following table shows the services with which the optional features and functions are available.

	Available with Technical Specifications Package WA-						
	1	1T	2	2A	3	4	C
Central Office Multiplexing:							
Mastergroup to Supergroup				X			
Supergroup to Group			X				
Group to Voice	X						
Group to DS1*		X					C

* Requires two 60-108 KHZ Channel Terminations and Channel Mileage, one 1.544 Mbps Channel Mileage and either a 1.544 Mbps channel Termination or a DS1 to Voice Multiplexing Optional Feature, depending on whether the service terminates at a customer's premises or was purchased to a Telephone Company Hub for Multiplexing to Voice Grade. N

7. Special Access Service (Cont'd)

7.2 Service Descriptions (Cont'd)

7.2.7 Wideband Data Service

(A) Basic Service Description

A Wideband Data service provides for the analog transmission of synchronous serial data at the rate of 19.2, 50.0, or 230.4 kbps or of asynchronous serial data at rates of up to 19.2, 50.0, or 230.4 kbps. Optional arrangements are available for transmission of synchronous serial data at 18.75 or 40.8 kbps. The actual bit rate is a function of the channel interface selected by the customer. This service requires a 303 Data Station(s). The 303 Data station provides coupling between the customer's business machine and the wideband data transmission medium. A voiceband coordinating channel is also provided. Wideband Data services are provided between customer designated premises through Serving Wire Center(s).

(B) Technical Specifications

Technical specifications and examples of application are set forth in Technical Reference TR-NPL-000340. C

While in service, the monthly average of error-free seconds will be equal to or greater than 98.75%.

(C) Channel Interfaces

Compatible channel interfaces are set forth in Technical Reference TR-NPL-000340. C

7. Special Access Service (Cont'd)

7.2 Service Descriptions (Cont'd)

7.2.7 Wideband Data Service (Cont'd)

(D) Optional Features and Functions

(1) Key Activated Transfer Arrangement

An arrangement that affords the customer an additional measure of flexibility in the use of their access service(s). The arrangement can be utilized to transfer a leg of a Special Access Service to either a spare or working service that terminates in either the same or a different customer premises. A key activated control service is required to operate the transfer arrangement. A spare service, if required, is not included as a part of the option.

The following table shows the services with which the Optional Features and Functions are available. N

	Available with Technical Specifications Package WD-			
	1	2	3	
Transfer Arrangement	X	X	X	N

7. Special Access Service (Cont'd)

7.2 Service Descriptions (Cont'd)

7.2.8 Generic Digital Transport Service

(A) Basic Service Description

A Generic Digital Transport Service is for duplex four-wire transmission of synchronous serial data at the rate of 2.4,4.8, 9.6, 19.2, 56, or 64 kbps. The actual bit rate is a function of the channel interface selected by the customer. The service is synchronous, with timing provided by the Telephone Company through the Telephone Company's facilities to the customer in the received bit stream. Except as set forth following, Generic Digital Transport services are only available via Telephone Company designated GDTS hubs and are provided between customer designated premises through Serving Wire Centers, between a customer designated premises and a Telephone Company GDTS Hub, between an EIS Point of T
Termination and a customer designated premises, between an T
EIS Point of Termination and a Telephone Company GDTS Hub, or between an EIS Point of Termination and a Broadband C
Fast Packet Service Network Port. C

The customer may provide the Channel Service Unit-type equipment or other Network Channel Terminating Equipment associated with the GDTS service at the customer premises. The interim program for interconnection of such equipment is set forth in Technical Reference PUB AS No. 1.

7. Special Access Service (Cont'd)

7.2 Service Descriptions (Cont'd)

7.2.8 Generic Digital Transport Service (Cont'd) T

(B) Technical Specifications

While in service the monthly average performance of error free seconds will be equal to or greater than 99.875%. In order to meet this standard, the service must be measured through a CSU equivalent which is designed, manufactured, and maintained to conform with specifications contained in Technical Reference PUB 62310 and PUB L-780077-PB. Cx

Technical specifications and examples of application are set forth in Technical References PUB 62507, 62310, TR-NPL-000157, L-780035-PB/NB, L-780036-PB/NB, and Cx
L-780037-PB/NB. Cx

D
D

(C) Channel Interfaces

Compatible channel interfaces are set forth in Technical Reference PUB 62507 and L-780030-PB/NB. Cx

x Issued under authority of Special Permission No. 94-997 of the Federal Communications Commission.
Certain Regulations previously found on this page can now be found on Page 274.1.

7. Special Access Service (Cont'd)

7.2 Service Descriptions (Cont'd)

7.2.8 Generic Digital Transport Service (Cont'd) T

(D) Optional Features and Functions M

(1) Central Office Bridging Capability

(2) Transfer Arrangement

An arrangement that affords the customer an additional measure of protection and/or flexibility in the use of their access channel(s) on a 1xN basis. The arrangement can be utilized to transfer a leg of a Special Access Service to either a spare or working service that terminates in either the same or different customer premises. This arrangement is only available at a Telephone Company GDTS hub. A key activated or dial up control service is required to operate the transfer arrangement. A spare service, if required is not included as part of the option. T M

(3) Public Packet Switching (PPS) Interface Arrangement

(a) An arrangement that provides the interface requirements that permit a Digital Data Service to interface with a Public Packet Switching port located on a Telephone Company premises. The interface is compatible with the X.75 packet switching protocol as defined by CCITT.

(b) Rates and charges under which the X.75 Protocol Interface port is offered are set forth Section

Certain Regulations on this page formerly appeared on Page 274.

7. Special Access Service (Cont'd)

7.2 Service Descriptions (Cont'd)

7.2.8 Generic Digital Transport Service (Cont'd) T

(D) Optional Features and Functions (Cont'd)

(4) Central Office Multiplexing

(a) DS1 to DS0

An arrangement that converts a 1.544 Mbps channel to twenty-three 64.0 kbps channels utilizing digital time division multiplexing.

(b) DS0 to Subrate

An arrangement that converts a 64.0 kbps channel to subspeeds of up to twenty 2.4 kbps, ten 4.8 kbps or five 9.6 kbps channels using digital time division multiplexing.

The following table shows the services with which the optional features and functions are available.

	Available with Technical Specifications Package DA						
	1	2	3	4	5	6	C
Central Office Bridging Capability	X	X	X	X	X	X	C
Transfer Arrangement	X	X	X	X			
Central Office Multiplexing:							
DS1 to DS0	X	X	X	X	X	X	C
DS0 to Subrate*	X	X	X	X			C
PPS Interface Arrangement			X	X			

Available only on a channel of a 1.544 Mbps Facility to a Telephone Company Hub.

7. Special Access Service (Cont'd)

7.2 Special Descriptions (Cont'd)

7.2.8 Generic Digital Transport Service (Cont'd) T

(D) Optional Features and Functions (Cont'd)

(5) Secondary Channel

(a) Secondary Channel is an Optional Feature associated with a basic Generic Digital Transport Service channel(s). T

Secondary Channel describes a second, totally independent, lower speed channel operating in parallel with the basic channel of a Generic Digital Transport Service. T T

(b) The types of Secondary Channels offered to provide for the simultaneous, independent two-way transmission of digital signals between two or more customer premises each having Secondary Channels are as follows:

- Secondary Channel furnished for digital transmission at a synchronous rate of 133 bps, operating in parallel with a basic 2.4 kbps channel (per station).

- Secondary Channel furnished for digital transmission at a synchronous rate of 266 bps, operating in parallel with a basic 4.8 kbps channel (per station).

- Secondary Channel furnished for digital transmission at a synchronous rate of 533 bps, operating in parallel with a basic 9.6 kbps channel (per station).

- Secondary Channel furnished for digital transmission at a synchronous rate of 2,666 bps, operating in parallel with a basic 56 kbps channel (per station).

7. Special Access Service (Cont'd)

7.2 Special Descriptions (Cont'd)

7.2.8 Generic Digital Transport Service (Cont'd) T

(D) Optional Features and Functions (Cont'd)

(6) Multiplexer Cross Connect

This arrangement is available only as a cross-connect of one channel of a GDTS multiplexer to one channel T
of another GDTS multiplexer; or one channel of a T
Special Access High Capacity DS1 multiplexer to one channel of another Special Access High Capacity DS1 multiplexer. Cross connects will be provided at 2.4 kbps, 4.8 kbps, 9.6, 19.2 kbps, 56 or 64 kbps. The C
customer must provide system and channel assignment information. All channel mileage charges will also apply.

(7) Customer Network Reconfiguration

Customer Network Reconfiguration (CNR) allows a customer to make changes in the individual circuit segments of their network. These changes can be mapped, stored and executed based on time of day, or the customer may request changes on demand for disaster recovery.

The CNR service is available at the Telephone Company's serving wire centers equipped with Digital Cross Connect as set forth in NECA's Tariff FCC No. 4. Two rate elements apply for CNR. One monthly rate element shall apply per DSO channel termination and one rate element shall apply per each reconfiguration completed from a Telephone Company Control Center.

CNR must be ordered at the time DOS service is ordered. CNR is required on all circuit terminations of the customer's network to be reconfigured. The customer must comply with Utility security procedures.

7. Special Access Service (Cont'd)

7.2 Service Descriptions (Cont'd)

7.2.9 High Capacity Service

(A) Basic Service Description

A High Capacity service is for the transmission of 1.544, 3.152, 6.312, 44.736 (DS3, DS3x3 and DS3x12), or 274.176 Mbps isochronous serial data. The actual bit rate and framing format is a function of the channel interface selected by the customer. DS3, DS3x3 and DS3x12 will be provided with or without Telephone Company provided terminal equipment on the customer's premises. When a customer desires to furnish their own terminal equipment, the Telephone Company mill work cooperatively with the customer to provide a physical interface satisfactory to both parties. High Capacity services are provided between customer designated premises through serving wire centers or between a customer designated premises and a Telephone Company Hub, or between a customer designated premises to an EIS Point of Termination, an EIS Point of Termination T
to a Hub, or between an EIS Point of Termination and a C
Broadband Fast Packet Service Network Port. DS3x12 is C
only provided between a customer designated premises and the serving wire center serving that premises.

DS3, DS3x3 and DS3x12 service provides a total capacity of one(DS3), three (DS3x3) or twelve (DS3x12) services. DS3x3 services can be point-to-point or connected at the wire center serving that premises to individual terminating DS3 services, or to individual DS3 services for multiplexing at a Hub. DS3x12 services can only be connected at the serving wire center to individual terminating DS3 services, or to individual DS3 services for multiplexing at a Hub. The DS3 to DS1 multiplexing function is only available in Telephone Company Hubs as indicated in the Exchange Carrier Association Tariff F.C.C. No. 4.

7. Special Access Service (Cont'd)

7.2 Service Descriptions (Cont'd)

7.2.9 High Capacity Service (Cont'd)

(A) Basic Service Description (Cont'd)

DS3, DS3x3 and DS3x12 High Capacity service offerings are only available where facilities and operating conditions permit. Where facilities and/or operating conditions do not permit, Special Construction as set forth in the Telephone Company's Tariff F.C.C. 129, Section 2.6.4 (E) (2) shall apply.

Fiber Advantage^{sm} Service is a high performance service providing transmission of 1.544, 3.152, 6.312, 44.736 (DS1 DS3, DS3x3, or DS3x12), or 274.176 Mbps isochronous serial data with reliability parameters designed to limit a single event from interrupting service. Fiber Advantage^{sm} Service is offered as end-to-end fiber optic DS1 and DS3 (DS3, DS3x3 and DS3x12) services provided with either an electrical or optical interface at the customer's premises. (C)

Customers requesting an electrical interface will receive (C) an electrical signal with a transmission speed of 44.736 | Mbps per channel. When the optical interface is selected (C) for DS3 Channel Termination (s) Without Terminal Equipment, the customer must provide the optical line termination at its premises, which must be compatible with Telephone Company equipment.

Customers requesting an optical interface for (a) Fiber Advantage^{sm} DS3x12 Channel Terminations (s) With Terminal Equipment will receive (an) optical signal (s) at the transmission speed(s) associated with the number of DS3s requested on the Access Order. The transmission speeds for optical interfaces are stated as approximate multiples of 44.736 Mbps. If the customer selects a Fiber Advantage^{sm} (DS3) DS3x12 Channel Termination With Terminal Equipment, and when existing facilities and equipment are in place, the customer can designate the twelve DS3 channel terminations to be provisioned over a single OC-12 optical interface.

Certain material previously appearing on this page now appears on Original Page 275.2.

(This page filed under Transmittal No. 1995)

ACCESS SERVICE

7. Special Access Service (Cont'd)

7.2 Service Descriptions (Cont'd)

7.2.9 High Capacity Service (Cont'd)

(A) Basic Service Description (Cont'd)

Fiber Advantage^{sm} Services are only available where facilities and operating conditions permit as determined Telephone Company. Upon request, Fiber Advantage service may be placed on diverse fiber facilities where available. Where facilities and/or operating conditions do not permit, Special Construction as set forth in the Telephone Company's Tariff F.C.C. 129, Section 2.6.4 (E)(2) shall apply. A customer may order any appropriate High Capacity Advantage^{sm} service. (M)

DS3x3, and DS3x12 high capacity service shall only be provided as Fiber Advantage^{sm} Service. At the customer's option, DS1 may be provided as High Capacity, Fiber Advantage or SONET Ring and Access Service; DS3 may be provided as either Fiber Advantage^{sm} Service or SONET Ring and Access Services. (M)

Certain material on this page formerly appeared on 1st Revised page 275.1

(This page filed under Transmittal No. 1995)

7. Special Access Service (Cont'd)

7.2 Service Descriptions (Cont'd)

7.2.9 High Capacity Service (Cont'd)

(B) Technical Specifications

While in service the average performance of error free seconds will be 98.75% over a continuous 24 hour period. In order to meet this standard, the service must be measured at the specified Mbps rate through a CSU equivalent which is designed, manufactured, and maintained to conform with the specifications set forth in Technical Reference PUB 62508.

Fiber Advantage[sm] Service will provide at least 99.999% circuit availability on a monthly basis. This applies only to the Telephone Company-provided service and requires customer-provided equipment to be fully compatible and operational under the specifications set forth in Technical Publication L-780059-PB. Nx

(C) Channel Interfaces

Compatible channel interfaces are set forth in Technical Reference 62508 and PUBL-780059-PB. Cx

x Issued under authority of Special Permission No. 94-1033 of the Federal Communications Commission.
Certain regulations previously found on this page can now be found on page 276.1.

7. Special Access Service (Cont'd)

7.2 Service Descriptions (Cont'd)

7.2.9 High Capacity Service (Cont'd)

(D) Optional Features and Functions

(1) Automatic Loop Transfer M

The Automatic Protection arrangement provides protection, at a minimum, from the serving wire center to the customer premises. Protection is furnished through the use of a switching arrangement that automatically switches to a spare service when a working service fails. The spare service is not included as a part of the option. This option requires compatible equipment at both the serving wire center and the customer premises. The customer is responsible for providing the equipment at its premises. Equipment at the customer premises will be provided under tariff only if it existed in the Telephone Company inventory as of November 18, 1983. M

(2) Transfer Arrangement

An arrangement that affords the customer an additional measure of flexibility in the use of their access channel(s). The arrangement can be utilized to transfer a leg of a Special Access Service to either a spare or working service that terminates in either the same or a different customer premises. A key activated or dial up control service is required to operate the transfer arrangement. A spare service, if required, is not included as part of the option.

Certain regulations on this page formerly appeared on page 276.

7. Special Access Service (Cont'd)

7.2 Service Descriptions (Cont'd)

7.2.9 High Capacity Service (Cont'd)

(D) Optional Features and Functions (Cont'd)

(3) Central Office Multiplexing

(a) DS4 to DS1

An arrangement that converts a 274.176 Mbps channel to 168 DS1 channels using digital time division multiplexing.

(b) DS3 to DS1

There are two options available with this feature. N

Option 1 N

An arrangement that converts a 44.736 Mbps channel to 28 DS1 channels using digital time division multiplexing.

Option 2 N

An arrangement that converts a 44.736 Mbps channel to up to 28 channels for use with DS1 service when Customer Network Reconfiguration is requested as set forth in 7.2.9 (D) following. When this option is ordered the Multiplexing Hub must be one of the Network Reconfiguration Hubs listed in NECA's Tariff FCC No. 4. N

(c) DS2 to DS1

An arrangement that converts a 6.312 Mbps channel to four DS1 channels using digital time division multiplexing.

(d) DS1C to DS1

An arrangement that converts a 3.152 Mbps channel to two DS1 channels using digital time division multiplexing.

7. Special Access Service (Cont'd)

7.2 Service Descriptions (Cont'd)

7.2.9 High Capacity Service (Cont'd)

(D) Optional Features and Functions (Cont'd)

(3) Central Office Multiplexing (Cont'd)

(e) DS1 to Voice/Digital

D
D

An arrangement that converts a 1.544 Mbps channel up to 24 channels for use with Voice Grade, Program Audio, Digital Data Over Voice, and/or Generic Digital Transport Services. C T D D

Customers ordering multiplexed High Capacity Service will be required to provide subsequent system and channel assignment data.

7. Special Access Service (Cont'd)

7.2 Service Descriptions (Cont'd)

7.2.9 High Capacity Service (Cont'd)

(D) Optional Features and Functions (Cont'd)

(3) Central Office Multiplexing (Cont'd)

The following table shows the services with which the optional features and functions are available.

	Available with Technical Specifications Package HC-							
	0	1	1C	2	3	3x3	4	
Automatic Loop Transfer		X						
Central Office Multiplexing:								
DS4 to DS1							X	
DS3 to DS1								
- Option 1					X	X		
- Option 2					X	X		
DS2 to DS1				X				
DS1C to DS1			X					
DS1 to Voice/Digital		X						T D D
Transfer Arrangement		X						
Alternate Serving Wire Center		X			X			
Enhanced Access Diversity		X			X	X		
Multiplexer Cross Connect	X							

(4) Customer Network Reconfiguration

Customer Network Reconfiguration (CNR) allows a customer to make changes in the individual circuit segments of their network. These changes are made at the DS0 level which have been multiplexed onto the DS1, or at the DS1 level which have been multiplexed onto the DS3. The changes are initiated by the customer calling the Telephone Company and requesting a reconfiguration to be completed. For DS0 to DS1, the desired reconfiguration can be mapped and stored and executed based on time of day or for disaster recovery.

7. Special Access Service (Cont'd)

7.2 Service Descriptions (Cont'd)

7.2.9 High Capacity Service (Cont'd)

(D) Optional Features and Functions (Cont'd)

(4) Customer Network Reconfiguration (Cont'd)

The CNR service is available at the Telephone Company's serving wire center equipped with Digital Cross Connect as set forth in NECA's Tariff FCC No. 4. T

(a) DS1 to DS0 CNR N

Two rate elements apply for CNR. One monthly rate element shall apply per DS1 channel termination equipped with CNR capability and one rate element shall apply per each reconfiguration completed by a Telephone Company Control Center at either the DS1 or DSO level.

CNR must be ordered at the time high capacity service is ordered. CNR is required on all circuit terminations of the customer's network to be reconfigured. The customer must comply with Utility security procedures.

(b) DS3 to DS1 Customer Network Reconfiguration N

The CNR Termination Charge and Network Reconfiguration Charge are in addition to any applicable Channel Termination, Channel Mileage, Multiplexing, and other optional features and functions charges.

A CNR Termination Charge is required for each termination on a Digital Cross-Connect System, when connecting between Digital Cross-Connect Systems and is in addition to any applicable Channel Mileage charges. Two DS3 CNR Termination charges will apply when connecting between two central offices where DS3 CNR Terminations are provided, one charge at each termination.

The Network Reconfiguration charge occurs when the customer orders a network reconfiguration. N

7. Special Access Service (Cont'd)

7.2 Service Descriptions (Cont'd)

7.2.9 High Capacity Service (Cont'd)

(D) Optional Features and Functions (Cont'd)

(5) Alternate Serving Wire Center (ASWC) Sx

ASWC is an optional feature in which High Capacity Channel Terminations are provided to an alternate serving wire center other than that normally serving the customer's designated premises. The Telephone Company will designate the serving wire center to be used, however, the mileage used to determine the monthly rate for channel mileage is based on the normal serving wire center associated with the customer designated premises as described in 7.1.2 preceding. Sx
The customer may order DS3 ASWC with either an Ny
electrical or optical handoff. When an optical handoff is ordered, no terminal equipment will be provided by the Telephone Company at the customer premises. This Ny
feature is not available with Shared Use Digital High Ty
Capacity Service or DS3x3 or DS3x12 Service. Ty

When a customer orders the ASWC Optional Feature, the Sx
Alternate Serving Wire Center rate as specified in 7.5.9 following applies in addition to the Channel Termination and Channel Mileage Rates and Charges for each applicable High Capacity Service. Rates for ASWC Sx
apply per point of termination. In addition, if ASWC Ny
is ordered after installation of the DS1 or DS3 service, a Service Rearrangement Charge shall apply as set forth in 7.4.1(C)(3), following. Ny

Listed following are serving wire center locations Sx
where ASWC is immediately available:

SNFCCA01	SNFCCA21	CLCYCA11
ANHMCA11	SCRMCA11	IGWDCA01
LSANCA01	LSANCA03	LSANCA07
OKLDCA03	LSANCA08	LSANCA10
LSANCA11		

Sx

x Reissued Material to become effective March 30, 1992.
y Issued on not less than 25 days notice under authority of Special Permission No. 92-165 of the Federal Communications Commission.

Certain regulations previously found on this page can now be found on page 278.4.

ACCESS SERVICE

7. Special Access Service (Cont'd)

7.2 Service Descriptions (Cont'd)

7.2.9 High Capacity Service (Cont'd)

(D) Optional Features and Functions (Cont'd)

(5) Alternate Serving Wire Center (ASWC) (Cont'd)

Subject to the provisions of 2.1.4, Provision of Services, and 5.1.3, Special Construction preceding, ASWC will be provided in other locations within one year from receiving a customer request. MSx MSx

Example: High Capacity DS1 or DS3 service connecting two customer premises via Alternate Serving Wire Center. Ny

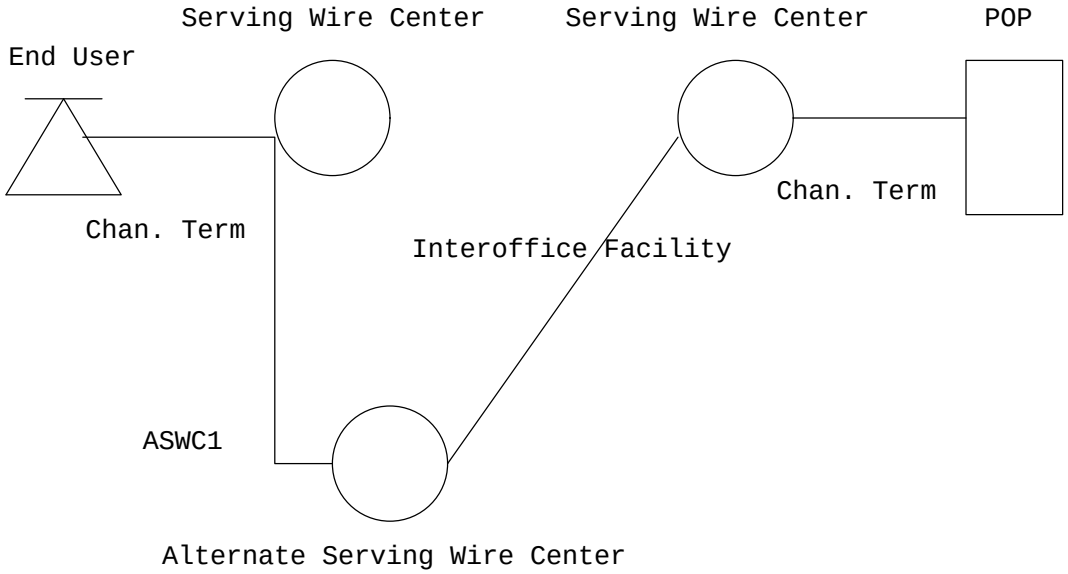

	Rate Elements	Applicable charges
1	2 Chan. Terms	Monthly Recurring and Non-Recurring
2	Interoffice Mileage	Monthly Recurring
3	ASWC1	Monthly Recurring

Ny

x Reissued material to become effective March 30, 1992.
y Issued on not less than 25 days notice under authority of Special Permission No. 92-165 of the Federal Communications Commission.
Certain regulations found on this page formerly found on page 278.3.

7. Special Access Service (Cont'd)

7.2 Service Descriptions (Cont'd)

7.2.9 High Capacity Service (Cont'd)

(D) Optional Features and Functions (Cont'd)

(6) Enhanced Access Diversity (EAD)

EAD is an optional feature in which Special Access High Capacity Service is provided on a transmission facility alternately routed from the primary (standard) transmission facility path. The amount of diversity is determined by the option, described below, selected by the customer.

EAD may be provisioned on Telephone Company facilities where capability and capacity permit. Otherwise, the customer may order facilities under Special Construction.

When placing orders for EAD, the customer must identify the services that will be diverse. The customer must also supply all appropriate facility assignments and other information to permit the Telephone Company to provide and maintain EAD service. C

When High Capacity DS3 service is multiplexed, rates and charges for each EAD service connecting to the multiplexer will apply. Applicable rates and charges for the DS3 service will also apply if identified as an EAD service. Customers leasing Telephone Company-provided multiplexers will provide and identify Connecting Facility Assignments of diverse services to the multiplexer.

ACCESS SERVICE

7. Special Access Service (Cont'd)

7.2 Service Descriptions (Cont'd)

7.2.9 High Capacity Service (Cont'd)

(D) Optional Features and Functions (Cont'd)

(6) Enhanced Access Diversity (EAD) (Cont'd) N

EAD is provided on a per DS1 or DS3 basis only.

Option 1

This option utilizes existing physically diverse interoffice facilities, excluding equipment and facilities located in a wire center extending to the first manhole outside the wire center, to provide diversity between serving wire centers only.

Option 2

This option utilizes existing physically diverse local loop and interoffice facilities, excluding equipment and facilities located in a wire center extending to the first manhole outside the wire center or from the point of termination to the first manhole outside a customer premises, to provide diversity between customer premises, between a customer premises and a hub, or between a customer premises and an EIS Point of Termination. N

ACCESS SERVICE

7. Special Access Service (Cont'd)

7.2 Service Descriptions (Cont'd)

7.2.9 High Capacity Service (Cont'd)

(D) Optional Features and Functions (Cont'd)

(6) Enhanced Access Diversity (EAD) (Cont'd) N

Option 3

This option utilizes existing physically diverse local loop and interoffice facilities to provide diversity between customer premises, between a customer premises and a hub, or between a customer premises and an EIS Point of Termination.

In this option, diverse channel termination (local loop) facilities from the customer premises to a wire enter other than the customer's serving wire center must already exist.

The customer must inform the Telephone Company of existing diverse local loop facilities provided under Special Construction over which the service will be routed.

Interoffice mileage will be charged between the wire centers where the local loops actually terminate. N

7. Special Access Service (Cont'd)

7.2 Service Descriptions (Cont'd)

7.2.9 High Capacity Service (Cont'd)

(D) Optional Features and Functions (Cont'd)

(7) DS1 Multiplexer Cross Connect Sx

This arrangement is available only as a cross-connect of one channel of a Special Access High Capacity DS3 multiplexer to a channel of another Special Access High Capacity DS3 multiplexer. Cross connects are provided at 1.544 Mbps. The customer must provide system and channel assignment information. All channel mileage charges will also apply. Sx

x Issued on not less than 1 day's notice under authority of Special Permission No. 94-914 of the Federal Communications Commission to advance the effective date from August 20, 1994 to August 9, 1994.

7. Special Access N

7.2 Service Descriptions (Cont'd)

7.2.10 Digital Data Over Voice Service

(A) Basic Service Description

A Digital Data Over Voice (DDOV) service allows the simultaneous transmission of either synchronous or asynchronous data at speeds of 2.4, 4.8, 9.6 or 19.2 kbps. The actual bit rate is a function of the channel interface selected by the customer. A DDOV Channel Termination is provided as a derived channel of a customer's existing local exchange voice grade service local loop facility. The customer may transmit data over the DDOV service simultaneously with a voice transmission. The customer must provide a compatible data voice multiplexer at the designated customer premises.

DDOV is provided where suitable intraexchange voice grade service local loop facilities are available subject to the transmission limitations of the facilities and equipment used by the Telephone Company.

DDOV must be ordered in conjunction with High Capacity Multiplexing, DS1 to Voice/Digital Option 1 or Option 2, as set forth in 7.2.9 (e) preceding.

(B) Technical Specifications

The technical specifications for DDOV service and the customer-provided data voice multiplexer are delineated in the appropriate Technical Reference for DDOV service listed in Section 7.2.

(C) Channel Interfaces

Compatible channel interfaces are set forth in the appropriate Technical Reference for DDOV service listed in Section 7.2. N

7. Special Access Service (Cont'd)

7.2 Service Descriptions (Cont'd)

7.2.11 SONET Ring and Access Services

(A) Basic Service Description

SONET Ring and Access Services provide dedicated bandwidth capacity (bit rate capacity or bit speed) over self healing ring and two-point (a.k.a. circuit service) facility configurations for a single customer. Connecting facilities carry synchronous and asynchronous transmissions. The service includes enhanced survivability and network management per SONET (Synchronous Optical Network) technology.

Synchronous Transport Signal - level 1 (STS1) at 51 Mbps is the basic SONET technology building block. Electrical signals in the form of digital pulses are converted to light or Optical Carrier rates (OC-n) for transmission on fiber optic facilities.

The Telephone Company's service supports asynchronous bandwidth capacities at 1.5 Mbps and 45 Mbps plus synchronous bandwidth capacities at 155 Mbps, 622 Mbps and 2.4Gbps. The SONET add/drop multiplexer aggregates lesser bit speed services onto the dedicated ring or two point(circuit service) configurations.

Rate elements are: C

- Premises and Central Office Nodes for connecting to the ring, using the SONET add/drop multiplexer.

- Premises and Central Office Access Ports that identify facility interfaces

- Local Loop Access Links that connect a customer's premise to the central office.

- Primary Node Links connecting the primary central office node to the customer's premises or Point of Presence.

Plus Dedicated Ring Fees, Mileage and Optional Features. C

An EIS Cross-Connect may connect to a SONET Central or premises Office Access Node or Port.

7. Special Access Service (Cont'd)

7.2 Service Descriptions (Cont'd)

7.2.11 SONET Ring and Access Services (Cont'd)

(A) Basic Service Description (Cont'd)

All service configurations have one working and one standby transmission path. In the event of failure of the customer's transmission path, SONET technology will switch, within 50 milliseconds of detection, the customer's transmissions to a dedicated standby path. For example, with 1+1 protection on a 2.4 Gbps dedicated ring the customer will have 24 equivalent 51 Mbps channels along with 24 protection channels (at 51 Mbps) in one direction plus 24 equivalent 51 Mbps channels along with 24 protection channels (at 51 Mbps) available in another direction. C

During the establishment of a dedicated ring configuration the Telephone Company and Customer will establish a Cooperative Planning Agreement for the management of the design, engineering and provisioning of the ring and the migration of existing services onto the dedicated ring.

SONET Ring and Access Services are planned for the major metropolitan areas of California. By the end of 1996 facilities will be available in many areas of California including the major central offices of the San Francisco, Sacramento and Los Angeles metropolitan areas, plus Orange and San Diego counties. Where facilities and/or operating conditions do not permit the availability of services, Special Construction as set forth in the Telephone Company's Tariff F.C.C. No. 129 apply. C C

Upon request, SONET Ring and Access Services may be placed on diverse fiber facilities where available. Diversity is available as shown in Section 7.5.9 (F).

Channel Interfaces

Compatible channel interfaces are listed in Technical Reference PUB L-780046-PB/NV - Technical Requirements for SONET Ring and Access Services.

7. Special Access Service (Cont'd)

7.2 Service Descriptions (Cont'd)

7.2.11 SONET Ring and Access Services (Cont'd)

(A) Basic Service Description (Cont'd)

(1) Mileage

Mileage charges apply to the varying configurations of the SONET Ring and Access Services. Mileage is charged based on V&H miles determined from National Exchange Carrier Association (NECA) Tariff FCC No. 4. Fractions of a mile are rounded up to the whole mile for rate calculations. C C

For the dedicated ring recurring mileage is for the interoffice facilities between nodes. The chargeable mileage is that mileage per link exceeding the ten miles included in the Dedicated Ring Fee for Interoffice or Alternate Wire Center. Distances obtained from V&H coordinates set forth in NECA Tariff, FCC No. 4, will determine the chargeable mileage on a per link basis. The V&H Coordinates of the normal serving wire center of the customer premises will be used for calculating mileage from Premises Nodes. The monthly mileage charge for the dedicated ring is determined by multiplying the applicable rate times the chargeable mileage. C C | C

For circuit service configurations recurring mileage provides for interoffice facilities between the end point nodes of the circuit. The chargeable mileage is the distance between the central offices with the end point nodes. These distances are determined using the V&H coordinates of NECA Tariff FCC No. 4. The monthly mileage charge for circuit service is determined by multiplying the applicable monthly rate times the chargeable mileage.

7. Special Access Service (Cont'd)

7.2 Service Descriptions (Cont'd)

7.2.11 SONET Ring and Access Services (Cont'd)

(A) Basic Service Description (Cont'd)

(2) Dedicated Ring Fee

Dedicated Ring Fees provide for the construction of dedicated transport facilities, related service order activity and ongoing ring maintenance. There are three Fees: (1) Interoffice: for CO Node to CO Node facilities; (2) Local Loop: for facilities connecting a CO Node to one or more Premises Nodes in the customer's normal serving wire center, and (3) Alternate Wire Center: for facilities connecting a Premise Node to a central office outside of the customer's normal serving wire center. The fee does not apply to circuit service (two point) configurations. C C N N

(3) CO and Premises Node

Nodes, available in Rate Stability Payment Plans, aggregate lower bandwidth capacities onto the ring or circuit service through use of the SONET add/drop multiplexer function. The CO Node is located in the central office; the Premises Node, including Customer Provided Node, at the customer's location. Customer Provided Nodes must connect to Telephone Company nodes. CO Nodes shall be required for extending the range of the ring (i.e., for ring regeneration). Circuit Service CO Nodes may be used for interconnection to other rings (appropriate Circuit Service Mileage and CO Access Ports will be charged). For ring nodes bandwidth capacities are 155Mbps, 622 Mbps, and 2.4 Gbps. For circuit service configurations, bandwidth capacities are 1.5 Mbps, 51Mbps, 155 Mbps and 622 Mbps. A minimum of one CO Node is required on a ring. C C

An EIS Cross-Connect may connect to a CO Node.

7. Special Access Service (Cont'd)

7.2 Service Descriptions (Cont'd)

7.2.11 SONET Ring and Access Services (Cont'd)

(A) Basic Service Description (Cont'd)

(4) Local Loop Access Link

(a) Local Loop Access Link With Equipment

The Local Loop Access Link provides the equipment for delivering transmissions from the customer's premises to the Telephone Company's dedicated ring or circuit service. Bandwidth capabilities are 1.5Mbps, 45 Mbps, and 155 Mbps.

(b) Local Loop Access Link Without Equipment
Reserved for future use

(5) Premises Access Port

The Premises Access Port is associated with a Premises Node at the customer’s location. It is identified by 1.5Mbps, 45 Mbps, 155 Mbps and 622 Mbps bandwidth capacities.

Additional Connection for 2.4 Gbps (OC 48) at 622Mbps bandwidth capacity connects to a Premise Node to accommodate interfaces at 1.5Mbps and 155Mbps. This port must be purchased for each 622 Mbps bandwidth before the 1.5Mbps or 155Mbps Premise Access Ports will work on an OC 48 Premise Node. (C)

The additional connection for 2.4 Gbps at 622 Mbps is not required for OC 12c (622 Mbps) Premises Access Ports or DS3 (45 Mbps) Premises Access Ports. However, an OC 48 Premises Node is required to provision 622 Mbps bandwidth service or OC 12c Premises Access Ports. (N) (N)

(6) Central Office Access Port

The Central Office Access Port connects Local Loop Access Links, or channel terminations, multiplexers or circuit service facilities to the Central Office Node in dedicated ring configurations. It offers bandwidth capacities of 51Mbps, 155Mbps and 622Mbps.

An EIS Cross-Connect may connect to a Central Office Access Port.

(This page filed under Transmittal No. 2022)

ACCESS SERVICE

7. Special Access Service (Cont'd)

7.2 Service Descriptions (Cont'd)

7.2.11 SONET Ring and Access Services (Cont'd)

(A) Basic Service Description (Cont'd)

(7) Primary Node Link

The Primary Node Link may act as the interface to the dedicated interoffice ring at the customer's designated primary CO Node location (primary node). The Primary Node Link can be located at either a customer's premises or a Point of Presence (POP). The customer can designate one primary node on a ring that has no premises node locations for use with the Primary Node Links. Other nodes on the ring require Central Office Access Ports, Local Loop Access Links and/or channel terminations for the ring interface. The Primary Node Link cannot be used on rings with a Premise Node. Primary Node Link bandwidth capacities are: 1.5 Mbps, 51 Mbps, 155 Mbps, or 622 Mbps.

(8) Optional Features and Functions

(a) Central Office Multiplexing

DS1 to DS0 (voice/digital)

An arrangement that converts DS1 channel to 24 DS0 channels that can be provided from Special Access Section 7.5.9 (C)(1).

DS3 to DS1

An arrangement that converts a DS3 channel to 28 DS1 channels using digital time division multiplexing.

There is no SONET multiplexing arrangement for (N)
bandwidth capacities above 51 Mbps. (N)

(This page filed under Transmittal No. 2022)