ACCESS SERVICE

7. Special Access Service

MAPPING OF BASIC SERVICE ELEMENTS

The following is a list of the FairPoint Telephone Companies Open Network Architecture (ONA) Special Access optional features which were presented in the NYNEX ONA Plan as Basic Service Element (BSE) offerings. This list provides a mapping from the industry standard feature name to the feature name utilized in this tariff.

Industry Standard:	FairPoint Telephone Companies
Automatic Protection Switching	Automatic Loop Transfer
Bridging	C.O. Bridging Capability
Bridging	Series Bridging
Bridging	Telegraph Bridging
Bridging	Three Premises Bridging
Conditioning	C-Type Conditioning
Multiplexing Digital	Central Office Multiplexing
Multiplexing Digital	Multiplexing
N/A	Conditioning
N/A	Diversity
N/A	Four-Wire/Two-Wire Conversions
N/A	Gain Conditioning

ACCESS SERVICE

7. Special Access Service (Cont'd)

MAPPING OF BASIC SERVICE ELEMENTS

The following is a list of the FairPoint Telephone Companies Open Network Architecture (ONA) Special Access optional features which were presented in the NYNEX ONA Plan as Basic Service Element (BSE) offerings. This list provides a mapping from the industry standard feature name to the feature name utilized in this tariff.

Industry Standard:	FairPoint Telephone Companies
N/A	Provision of Services
N/A	Sealing Current Conditioning
N/A	Signaling Capability
N/A	Technical Specification Packages
N/A	Transfer Arrangement
Network Reconfiguration	FairPoint Enterprise Network Reconfiguration Service
Route Diversity	Avoidance
Secondary Channel Capability	Secondary Channel Capability

ACCESS SERVICE

7. Special Access Service (Cont'd)

7.1 General

Special Access Service provides a transmission path to connect customer designated premises, a customer designated premises and a WATS Serving Office (WSO), a customer designated premises and a Network Controller location or a fiber meet location of a Dedicated SONET Ring (DSR)## or IntelliBeam Optical Transport Service, or a customer designated premises and a wire center where connection to an advanced data service# occurs, or a customer designated premises and an Expanded Interconnection multiplexing node or virtual collocation arrangement. Except for Expanded Interconnection, the connection may be made either directly or through a Telephone Company Hub where bridging, multiplexing, Vertical Service (i.e., NRS or FRS) or FairPoint Enterprise Service functions are performed. For Expanded Interconnection, the connection may be made either directly or through a Telephone Company Hub where multiplexing functions or Frame Relay Service functions are performed.

In addition, certain Video and Advanced Video Services may provide the transmission path to connect a customer designated premises and a Telephone Company Hub where compatible services are switched as described in 7.2.5 and 7.2.14.

The connections provided by Special Access Service can be either analog or digital. Analog connections are differentiated by spectrum and bandwidth. Digital connections are differentiated by bit rate.

The following Telephone Company locations are considered to be customer premises for purposes of administering regulations and rates contained in this tariff and, in the case of Direct Inward Dialing (DID) facility locations, only to permit customers to provide DID Service to Radio Common Carriers:

- Answering Service Concentrators
- Centrex-CO switches
- DID facility locations
- Digital Automatic Call Distribution Service central offices
- INTELLIBEAMHUB dedicated network service nodes
- Packet switches other than those set forth in Section 17. Following
- DATAFLASH℠ * packet switching service ports
- FP PATH custom network service serving nodes
- IDSR customer surveillance points**

* Service availability limited. Refer to # footnote on Page 17-9.

** Service availability limited. See footnote on Page 26-1.

Advanced data services include Telephone Company provided frame relay services, switched multi-megabit services, Internet Protocol services and ATM-cell relay services. Connections to advanced data services are provided by the Telephone Company where such connections are technically and operationally feasible, as determined by the Telephone Company.

Rates, terms, and conditions for Telephone Company Dedicated SONET Ring are set forth in Section 34.1 following.

ACCESS SERVICE

7. Special Access Service (Cont'd)

7.1 General (Cont'd)

7.1.1 Channel Types

There are several types of channels used to provide Special Access Service. Eight of these channel types are classified as Basic Serving Arrangements (BSAs) under the Open Network Architecture structure. Each type has its own characteristics. All are usually subdivided by one or more of the following:

- Transmission specifications
- Bandwidth
- Speed (i.e., bit rate)
- Spectrum

Customers can order a basic channel and select, from a list of available transmission parameters and channel interfaces, those that they desire to meet specific communications requirements.

For purposes of ordering channels, each has been identified as a type of Special Access Service. However, such identification is not intended to limit a customer's use of the channel or to imply that the channel is limited to a particular use. For example, if a customer's equipment is capable of transmitting voice over a channel that is identified as a Metallic Service in this tariff, there is no restriction against doing so.

Following is a brief description of each type of channel:

Metallic BSA - a channel for the transmission of low speed varying signals at rates up to 30 baud.

Telegraph Grade BSA - a channel for the transmission of binary signals at rates of 0 to 75 baud or 0 to 150 baud.

Voice Grade BSA - a channel for the transmission of analog signals within an approximate bandwidth of 300-3000 Hz.

Program Audio BSA - a channel for the transmission of audio signals. The nominal frequency bandwidths are from 50 to 15000 Hz, from 200 to 3500 Hz, from 100 to 5000 Hz or from 50 to 8000 Hz.

ACCESS SERVICE

7. Special Access Service (Cont'd)

7.1 General (Cont'd)

7.1.1 Channel Types (Cont'd)

Broadcast Video BSA - a channel for the transmission of a standard 525 line/60 field monochrome or National Television Systems Committee color video signal of broadcast quality and its associated 5 or 15 kHz audio signals. The bandwidth for a Broadcast Video channel is either 30 Hz to 4.5 MHz or 30 Hz to 6.6 MHz.

Multichannel Video - a channel for the Frequency Modulation (FM) one-way transmission of up to sixteen standard 525 line/60 field monochrome or National Television Systems Committee color video signals of less than broadcast quality and their associated audio signal(s). The bandwidth for each video signal within the MVS channel is 6 MHz.

Supertrunking Transport Video Service - a channel with a bandwidth of up to either 750 MHz or 870 MHz for the transmission of multiple Amplitude Modulation (AM) standard 525 line/60 field monochrome or National Television Systems Committee (NTSC) color video signals and monaural or Broadcast Television Systems Committee (BTSC) stereo audio signals over fiber optic facilities.

Wideband Analog - a channel for the transmission of wideband signals. The bandwidths are from 60 to 108 kHz (Group), from 312 to 552 kHz (Supergroup), from 300 Hz to 18 kHz, from 29 to 44 kHz or from 28 to 44 kHz.

Wideband Data - an analog channel for the transmission of synchronous serial data at rates of 19.2, 50.0 or 230.4 kbps or asynchronous serial data at rates of up to 19.2, 50.0 or 230.4 kbps.

Digital Data BSA - a channel for the digital transmission of synchronous serial data at rates of 2.4, 4.8, 9.6 or 56.0 kbps.

High Capacity BSA - a channel for the transmission of isochronous serial digital data at rates of 1.544 or 44.736 Mbps.

High Capacity - a channel for the transmission of isochronous serial digital data at rates of 3.152 Mbps.

WATS Access Line (WAL) - a channel between a customer designated premises and a WATS Serving Office.

ACCESS SERVICE

7. Special Access Service (Cont'd)

7.1 General (Cont'd)

7.1.1 Channel Types (Cont'd)

DIGIROUTE℠ digital service II - a channel for the simultaneous, synchronous transmission of digital data at the rate of 2.4, 4.8, 9.6, 19.2 or 56.0 kbps.

DOVROUTE℠ service BSA - a channel derived from local exchange service for the transmission of data at speeds of 2.4, 4.8, 9.6 or 19.2 kbps.

FairPoint Enterprise DSO Service - a digital DSO channel for the transmission of analog or digital signals over FES fiber optic facilities.

FairPoint Enterprise Fractional DS1 Service - a digital channel provided over adjacent (contiguous) channels through a common interface at transmission rates of 128.0, 256.0, 384.0, 512.0 and 768.0 kbps.

FairPoint Enterprise DS1 Service - a channel for the transmission of isochronous serial digital data at rates of 1.544 Mbps over FES fiber optic facilities.

FairPoint Enterprise DS3 Service - a channel for the transmission of isochronous serial digital data at rates of 44.736 Mbps over FES fiber optic facilities.

Advanced Uncompressed Digital Video Service - a channel for the digital transmission of multiple one-way uncompressed 8 bit or 10 bit encoded standard 525 line/60 field monochrome, or National Television Systems Committee (NTSC) color, video signals and their associated audio signals.

Advanced Broadcast Video Service* - a channel for digital transmission, at a rate of 44.736 Mbps, of a broadcast quality standard 525 line/60 field monochrome, or National Television Systems Committee (NTSC) color, video signal and up to four associated 15 kHz audio signals.

Serial Component Video Service - a channel for one-way transmission, at a rate of 270 Mbps, of broadcast quality 4:2:2 component video signals in serial digital format conforming to the American National Standard Institute/Society of Motion Picture and Television Engineers (ANSI/SMPTE) Standard 259M.

* Service availability is limited. See footnote in 7.2.14(B) following for more details.

ACCESS SERVICE

7. Special Access Service (Cont'd)

7.1 General (Cont'd)

7.1.1 Channel Types (Cont'd)

High-Definition (Hi-Def) Digital Video Transport Service – a channel for one-way broadband transmission of high quality video signals in a digital format, at a rate of 19.39 Mbps conforming to the ANSI/SMPTE Standard 310M or at a rate of 1.485 Gbps conforming to the ANSI/SMPTE Standard 292M.

45 Mbps Digital Video Transport Service – a channel for one-way broadband transmission, at a rate of 45 Mbps, of high quality video signals in digital format conforming to ANSI digital hierarchy.

Channel Extension Service - a channel for broadband data transmission between mainframe computers, between mainframes and peripheral devices and/or between Local Area Networks (LANs). The transmission may be provided at data rates up to 1.25 Gbps.

Facilities Management Service - a service option that provides for Telephone Company management of engineering and design of a customer's Special Access Service network from the customer's designated primary premises to serving wire centers of secondary locations within the same LATA.

DSR – a dedicated high capacity customized network in a ring architecture or topology that assures survivability.

IntelliBeam Dedicated SONET Ring (IDSR)– a dedicated high capacity customized network in a ring architecture or topology that assures survivability.

IntelliBeam Optical Transport Service – a managed customized network in a ring architecture for the transport of multiple protocols of various wavelengths.

Bonded Digital Link Service – connecting channels for transmission of voice or data between an end user's local exchange service terminating at a digital cross-connect facility and a Telephone Company provided Special Access service within that same wire center or a different wire center within the same LATA.

LAN Extension Service – a channel for fiber transport connectivity at 10 Mbps, 16 Mbps Token Ring, 100 Mbps, 1 Gbps Ethernet, or 1 Gbps Extended Distance Interface.

Optical Network – a channel for managed optical transport of data signals at various speeds over a Telephone Company shared network.

ACCESS SERVICE

7. Special Access Service (Cont'd)

7.1 General (Cont'd)

7.1.1 Channel Types (Cont'd)

Detailed descriptions of each of the channel types are provided in 7.2 following.

The customer also has the option of ordering Voice Grade and digital high capacity facilities (i.e., 1.544 Mbps, 3.152 Mbps and 44.736 Mbps) to a Telephone Company Hub for multiplexing to individual channels of a lower capacity. FES channels may be ordered to a Telephone Company FES Hub for grooming to other FES channels of a different bandwidth. Descriptions of the types of multiplexing or grooming available at the Hubs, as well as the number of individual channels which may be derived from each type of facility are set forth in 7.2 following. Additionally, the customer may specify optional features or Basic Service Elements (BSEs) for the individual channels derived from the facility to further tailor the channel to meet specific communications requirements. Descriptions of the optional features and functions and BSEs available are also set forth in 7.2 following.

Certain Special Access Services may be ordered in conjunction with FairPoint Enterprise Network Reconfiguration Service (NRS). NRS enables Special Access Services to be reconfigured by cross-connecting services at Telephone Company Hubs where NRS functions are performed.

For example, a customer may order a 1.544 Mbps facility from a customer designated premises to a Telephone Company Hub for multiplexing to twenty-four Voice Grade channels. The Voice Grade channels may be further multiplexed at the same or a different Hub to Telegraph Grade channels or may be extended to other customer designated premises. Optional features or BSEs may be added to the 1.544 Mbps, the Voice Grade or the Telegraph Grade channels.

In addition, certain video and Advance Video Services may provide the transmission path to connect a customer designated premises and a Telephone Company Hub where compatible services are switched as described in 7.2.5 and 7.2.14 following.

ACCESS SERVICE

7. Special Access Service (Cont'd)

7.1 General (Cont'd)

7.1.2 Rate Categories

There are three basic rate categories which apply to Special Access Service:

- Channel Termination (described in 7.1.2(A) following).
- Channel Mileage (described in 7.1.2(B) following).
- Optional Features and Functions or BSEs (described in 7.1.2(C) following)

Additionally, ports and nodes may also apply to Special Access DSR as set forth in Section 34.1 following. Rates and charges for Integrated Optical Service Riders may also apply to Special Access connected to Integrated Optical Service Riders as set forth in Section 35.1 following.

Rates and charges for Special Access Services are found in Sections 30 and 31 following. Section 30 contains price banded rates and charges for services which are served from a wire center in a qualifying Metropolitan Statistical Area (MSA) which has achieved Phase II pricing relief as described in Section 15.2 following. Section 31 contains rates and charges for all non-price banded rate elements and for services that are served from a non-qualifying are switched as described in 7.2.5 and 7.2.14 following.

ACCESS SERVICE

7. Special Access Service (Cont'd)

7.1 General (Cont'd)

7.1.2 Rate Categories (Cont'd)

(A) Channel Termination

The Channel Termination rate element is divided into three categories, Standard Channel Termination, Office Channel Termination Cross Connect and Virtual Office Channel Termination (VOCT).

A Channel Termination charge does not apply at a DSR fiber meet location where high speed interconnection of the Company's facilities to the facilities of the customer or of a third party.

The Standard Channel Termination rate category provides for the communications path between a customer designated premises and the serving wire center of that premises or for the communications path within a building which connects a customer's facilities with a customer designated premises without routing through the serving wire center.

The Office Channel Termination Cross Connect rate category provides for the communications path between customer provided fiber optic or microwave facilities and transmission equipment and the Telephone Company serving wire center. When connecting collocated equipment using Dedicated Transit Service (DTS) as set forth in Section 27 following, an Office Channel Termination applies at each physical collocation arrangement involved in the DTS arrangement.

The Virtual Office Channel Termination rate category provides for the communications path between customer provided fiber optic facilities and transmission equipment and the Telephone Company serving wire center. When connecting collocated equipment using Dedicated Transit Service (DTS) as set forth in Section 27 following, a Virtual Office Channel Termination applies at each virtual collocation arrangement involved in the DTS arrangement.

Included as part of the Standard Channel Termination, Office Channel Termination Cross Connect or Virtual Office Channel Termination is a standard channel interface arrangement which defines the technical characteristics associated with the type of facilities to which the access service is to be connected at the Point of Termination (POT) and the type of signaling capability, if any. The signaling capability itself is provided as either an optional feature or a BSE as set forth in (C) following

ACCESS SERVICE

7. Special Access Service (Cont'd)

7.1 General (Cont'd)

7.1.2 Rate Categories (Cont'd)

(A) Channel Termination (Cont'd)

(1) One Standard Channel Termination applies per channel terminated at each customer designated premises.

The Standard Channel Termination rate element will apply for all Telephone Company Access connections except High Capacity utilizing an Expanded Interconnection multiplexing node or virtual collocation arrangement. A Standard Channel Termination monthly rate will apply even when the customer designated premises and the serving wire center are located in the same Telephone Company building unless the customer establishes an Expanded Interconnection multiplexing node or virtual collocation arrangement, in which case the rates and charges set forth in (2) following will apply.

(2) An Office Channel Termination (OCT) Cross Connect will apply in lieu of the Standard Channel Termination for each High Capacity FMS or LES channel terminated at an Expanded Interconnection multiplexing node. In addition, an OCT Termination Charge applies for each Office Channel Termination cross-connected to either a Telephone Company-provided POT Bay or a customer-provided, Telephone Company-maintained POT Bay at an Expanded Interconnection multiplexing node. The OCT Termination Charge applies in all states.

A Virtual Office Channel Termination (VOCT) will apply in lieu of the Standard Channel Termination for each High Capacity channel terminated at a virtual collocation arrangement.

(B) Channel Mileage

The Channel Mileage rate category provides for the transmission facilities:

(i) between the serving wire centers associated with two customer designated premises;
(ii) between a serving wire center associated with an end user premises and a WATS Serving Office (WSO), a Network Controller location or a Telephone Company Hub*;
(iii) between the serving wire center associated with a customer designated premises and a wire center where connection to an advanced data service occurs;
(iv) between the serving wire center associated with a customer designated premises and an Expanded Interconnection multiplexing node or virtual collocation arrangement;
(v) between an Expanded Interconnection multiplexing node or a virtual collocation arrangement and a Telephone Company multiplexing Hub, grooming Hub or Frame Relay Service Hub; or (vi) between two Telephone Company Hubs*, except when Frame Relay Service provides the transport between the Hubs.

* Includes connection to or between locations where IntelliBeam Broadband Transport (IBT) multiplexing capability occurs as described in Section 26.1.5(B)(3) following.

ACCESS SERVICE

7. Special Access Service (Cont'd)

7.1 General (Cont'd)

7.1.2 Rate Categories (Cont'd)

(B) Channel Mileage (Cont'd)

The Channel Mileage rate category also provides for the dedicated ring facilities between devices (nodes, high speed interfaces, or amplifiers) on a DSR or IOTS as set forth in Section 34.1 or 7.2.19 following, respectively. Channel Mileage is portrayed in mileage bands. Except as specified otherwise under the description and rates and charges for a service, there are two rates that apply for each band, i.e., a fixed rate per band and a rate per mile.

When the wire centers involved are located within different price density zones (pricing zones) or different price bands, the rates and charges applicable to the channel mileage element will be the rates and charges for the higher pricing zone or pricing band, as applicable. For example, pricing zone 3 rates and charges apply if one wire center is within pricing zone 2 and one wire center is within pricing zone 3 or price band 5 rates and charges apply if one wire center is within price band 4 and one wire center is within price band 5. When one of the wire centers involved is located within a pricing zone and the other wire center involved is located within a price band, the rates and charges applicable to the channel mileage element will be the rates and charges specified for the pricing zone.

The Channel Mileage rate category also provides for the transmission facilities between DSR nodes as described in Section 34.1 following.

In addition to the channel mileage rates, a nonrecurring charge (Mid-Link Charge) applies to Channel Mileage between:

- two Telephone Company Hubs or IBT multiplexing locations where cascade multiplexing is performed, unless the two Hubs are located in the same wire center provides the transport between Hubs; or

- two Telephone Company Hubs where FairPoint Enterprise Network Reconfiguration Service functions are performed, unless the two Hubs are located in the same wire center provides the transport between Hubs.

ACCESS SERVICE

7. Special Access Service (Cont'd)

7.1 General (Cont'd)

7.1.2 Rate Categories (Cont'd)

(B) Channel Mileage (Cont'd)

The Channel Mileage rate category also applies for the transmission facilities between:

(i) two Telephone Company Intermediate or Super-Intermediate Hubs;
(ii) two locations (nodes) where IBT multiplexing occurs;
(iii) an IDSR or DSR central office node or IBT multiplexing node and a Telephone Company Intermediate or Super-Intermediate Hub for the purpose of interconnecting two multiplexed facilities
(iv) two groomed facilities;
(v) an IDSR or DSR central office node or IBT multiplexing node and a multiplexed or groomed facility with a channel of lesser capacity; or
(vi) an IBT Multiplexing node and a multiplexed or groomed FES facility with a lesser channel capacity.

Channel mileage rates and a nonrecurring charge (ThruPath Connection Charge) apply for each lesser capacity channel arranged between the two multiplexed or groomed facilities, or between the multiplexed or groomed facility and the IDSR or DSR central office node or IBT multiplexing node*, as applicable. The channel mileage charge applies whether the two nodes and/or Hubs involved are within the same wire center or are within different wire centers.

Except for the Telephone Company hub locations set forth below, and subject to the regulations set forth in Section 7.4.7 following, High Capacity ThruPath Service connections are available at or between (i) all Intermediate or Super-Intermediate Hubs; or (ii) all IBT Multiplexing nodes; or (iii) an Intermediate or Super-Intermediate Hub and an IDSR or DSR central office node or IBT Multiplexing node.

- Essex Junction, VT

A Mid-Link Nonrecurring Charge does not apply to a ThruPath Service connection.

* An IDSR, DSR, or IBT service that utilizes asymmetrical port combinations may not be associated with ThruPath connections.

ACCESS SERVICE

7. Special Access Service (Cont'd)

7.1 General (Cont'd)

7.1.2 Rate Categories (Cont'd)

(B) Channel Mileage (Cont'd)

The following regulations apply to WAL Service for use with Feature Groups A, B and D, CSL BSA, and CST BSA - Option 1 and 3 arranged for originating only calling, not equipped with the End Office End User Line Service Screening optional feature, as detailed in Section 6. preceding, or arranged for two way calling, and to WAL Service for use with Feature Groups A, B, CSL BSA and CST BSA - Option 1 arranged for terminating only calling.

When the WSO which normally serves the customer designated premises (normal WSO) is not a suitably equipped WSO equipped with FGD or CST BSA - Option 3 capability, the WAL Service will be provided from the nearest WSO so equipped. Channel Mileage charges, if applicable, will apply only for the distance between the serving wire center of the customer designated premises and the normal WSO.

When the normal WSO is modified to be a suitably equipped WSO equipped with FGD or CST BSA - Option 3 capability, the WAL Service will be rearranged to be provided from the normal WSO. No charge will apply for such rearrangement. At the option of the customer, however, the WAL Service may continue to be provided from other than the normal WSO. Channel Mileage charges will then apply for the distance between the serving wire center of the customer designated premises and the serving WSO.

ACCESS SERVICE

7. Special Access Service (Cont'd)

7.1 General (Cont'd)

7.1.2 Rate Categories (Cont'd)

(C) Optional Features and Functions/Basic Service Elements

The Optional Features and Functions/Basic Service Element rate category provides for optional features and functions or BSEs which may be added to a Special Access Service to improve its quality or utility to meet specific communications requirements. These are not necessarily identifiable with specific equipment, but rather represent the end result in terms of performance characteristics which may be obtained. These characteristics may be obtained by using various combinations of equipment. Although the equipment necessary to perform a specified function may be installed at various locations along the path of the service, they will be charged for as a single rate element.

Examples of Optional Features and Functions/Basic Service Elements that are available include, but are not limited to, the following:

- Signaling Capability
- Central Office Bridging
- Central Office Multiplexing
- Conditioning
- Transfer Arrangements

Several Optional Features and Functions are performed from Telephone Company serving wire centers which have been designated as Telephone Company Hubs where certain functions are performed. For example, the bridging functions are to connect three or more customer designated premises in a multipoint arrangement while the multiplexing functions are to channelize analog or digital facilities to individual services requiring a lower capacity or bandwidth.

Switching and patching of certain video services and advanced video services are performed at hubs designated as Telephone Company Video Operations Centers (TVOCs)

ACCESS SERVICE

7. Special Access Service (Cont'd)

7.1 General (Cont'd)

7.1.3 Service Configurations

There are two types of service configurations over which Special Access Services are provided: two-point service and multipoint service.

(A) Two-Point Service

Except for Expanded Interconnection, two-point service connects two customer designated premises, or a customer designated premises and a WATS Serving Office, or a customer designated premises and a Network Controller location either on a directly connected basis or through a Hub where multiplexing, Vertical Service (i.e., NRS or FRS) or FairPoint Enterprise Service functions are performed. For Expanded Interconnection, a two-point service connects a customer designated premises and an Expanded Interconnection multiplexing node or virtual collocation arrangement either on a directly connected basis or through a Hub where multiplexing functions or Frame Relay Service functions are performed. Additionally, a two-point service may connect collocated equipment within the same Telephone Company premises subject to the regulations set forth in Section 27 following.

Applicable rate elements are:

- Channel Termination*
- Channel Mileage (as applicable)
- Optional Features and Functions (when applicable)

* The Channel Termination rate element applies as follows:

	Service	Type of Channel Termination
(1)	WATS Access line Service Extension Service provided for an additional termination of WAL Service as specified in	One Standard Channel Termination rate element applies at the customer designated premises.
(2)	Special Access Service provided to the Network Controller location as specified in Section 19. following.	On Standard Channel Termination rate element applies at the customer

ACCESS SERVICE

7. Special Access Service (Cont'd)

7.1 General (Cont'd)

7.1.3 Service Configurations (Cont'd)

(A) Two-Point Service (Cont'd)

Except for Expanded Interconnection, two-point service connects

Service	Type of Channel Termination
(3) High Capacity Services (except 44.736 Mbps with an Optical Fiber Interface Option) provided between an Expanded Interconnection multiplexing node and	
- a customer designated premises	One Standard Channel Termination rate element applies at the customer designated premises and One Office Channel Termination Cross Connect rate element applies at the Expanded Interconnection multiplexing node.*
- a Telephone Company Hub	One Office Channel Termination Cross Connect rate element applies at the Expanded Interconnection multiplexing node.*

* An OCT Termination Charge also applies for each Office Channel Termination cross-connected to either a Telephone Company-provided POT Bay or a customer-provided, Telephone Company-maintained POT Bay.

ACCESS SERVICE

7. Special Access Service (Cont'd)

7.1 General (Cont'd)

7.1.3 Service Configurations (Cont'd)

(A) Two-Point Service (Cont'd)

	Service	Type of Channel Termination
(4)	High Capacity Services (except 44.736 Mbps with an Optical Fiber Interface Option) provided between an Expanded Interconnection virtual Collocation arrangement and	
	- a customer designated premises	One Standard Channel Termination rate element Applies at the customer designated premises and one Virtual Office Channel Termination rate element applies at the virtual collocation arrangement.
	- a Telephone Company Hub	One Virtual Office Channel Termination rate element applies at the virtual collocation arrangement.
(5)	For all Special Access Services except as specified In (1) through (4) preceding provided between a customer designated premises and	
	- another customer designated premises	One Standard Channel Termination rate element applies at the each customer designated premises.
	- a Telephone Company Hub	One Standard Channel Termination rate element applies at the customer designated premises.

ACCESS SERVICE

7. Special Access Service (Cont'd)

7.1 General (Cont'd)

7.1.3 Service Configurations (Cont'd)

(A) Two-Point Service (Cont'd)

In addition a Special Access Surcharge as set forth in 7.4.2 following may be applicable.

The following diagram depicts a two-point Voice Grade service connecting two customer designated premises located 15 miles apart. The service is provided with C-Type Conditioning.

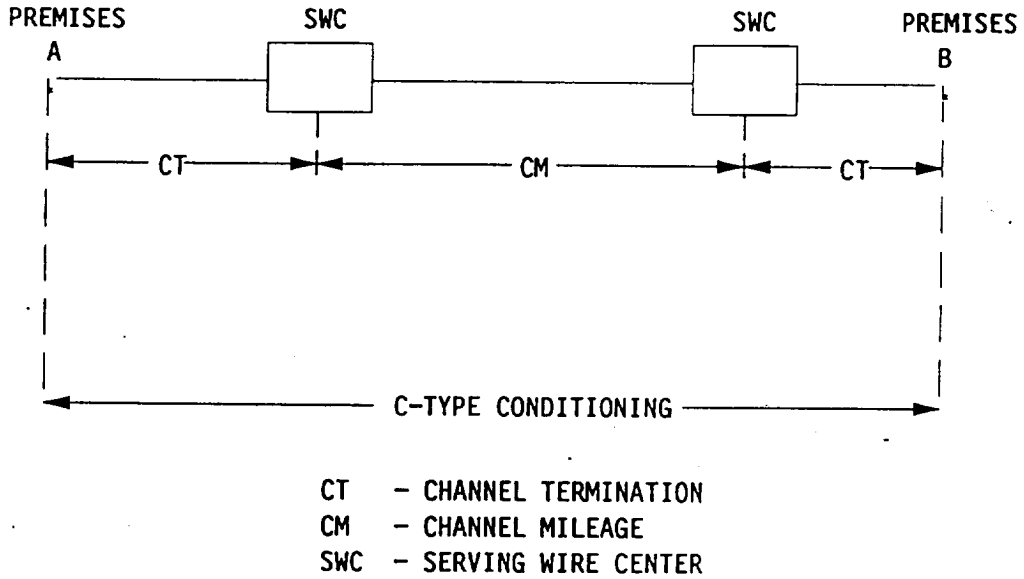

designated premises.

Applicable rate elements are:

- Channel Terminations (2 applicable)
- Channel Mileage (mileage band Over 0 miles)
- C-Type Conditioning BSE

ACCESS SERVICE

7. Special Access Service (Cont'd)

7.1 General (Cont'd)

7.1.3 Service Configurations (Cont'd)

(B) Multipoint Service

Multipoint service connects three or more* customer designated premises through a Telephone Company Hub. There is no limitation on the number of mid-links available with multipoint service, except for Video Service and Advanced Video Services which require that all services included in the multipoint arrangement be connected at a single Hub. However, where more than three mid-links are provided in tandem, the quality of the service may be degraded. A mid-link is a channel between Hubs (i.e., bridging locations). Only certain types of Special Access Service are provided as multipoint service. These are so designated in the Service Descriptions set forth in 7.2 following.

Multipoint service utilizing a customized technical specifications package as set forth in 7.2 following will be provided when technically possible. If the Telephone Company determines that the requested characteristics for a multipoint service are not compatible, the customer will be advised and given the opportunity to change the order.

When ordering, the customer will specify the desired bridging Hub(s) selected from the NATIONAL EXCHANGE CARRIER ASSOCIATION, INC. TARIFF F.C.C. NO. 4, unless otherwise specified in this tariff.

This tariff identifies the type(s) of bridging functions which are available and the serving wire centers at which they are available.

Applicable Rate Elements are:

- Channel Terminations (one per customer designated premises)
- Channel Mileage (as applicable between each customer designated premises and the Hub and between Hubs)
- Bridging (one bridge port per point of a circuit which terminates [enters or exits] at a Bridging Cross Connect System or equivalent device)
- Additional Optional Features and Functions (when applicable)

In addition, a Special Access Surcharge as set forth in 7.4.2 following may be applicable.

* For analog FairPoint Enterprise Service DSO channels, a maximum of forty-one customer designated premises may be connected in a multipoint configuration. For digital FairPoint Enterprise Service DSO Channels, a maximum of seventeen customer designated premises may be connected in a multipoint configuration.

ACCESS SERVICE

7. Special Access Service (Cont'd)

7.1 General (Cont'd)

7.1.3 Service Configurations (Cont'd)

(B) Multipoint Service (Cont'd)

Example: Voice Grade multipoint service connecting four customer designated premises via two customer specified bridging Hubs

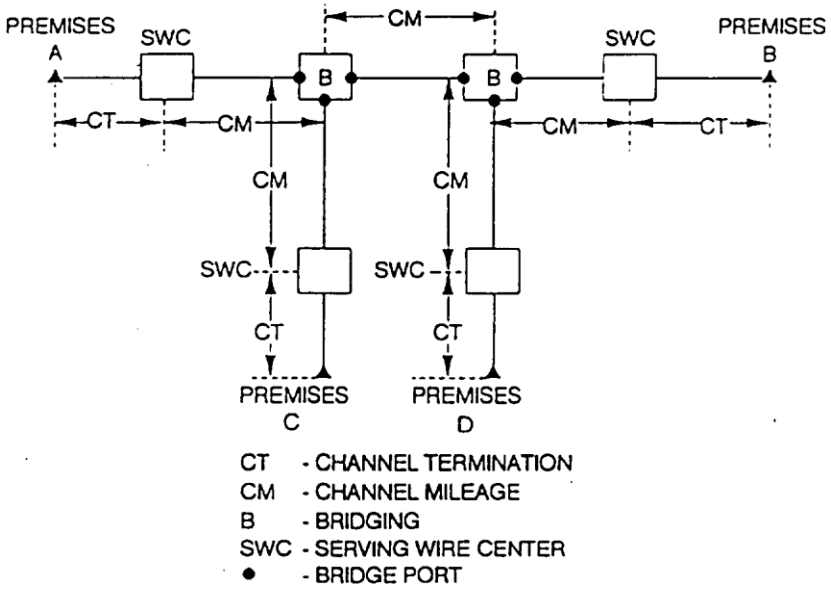

Applicable rate elements are:

- Channel Terminations (4 applicable)
- Channel Mileage (5 sections, each from appropriate mileage band)
- Bridging (6 applicable, i.e., each bridge port)

ACCESS SERVICE

7. Special Access Service (Cont'd)

7.1 General (Cont'd)

7.1.4 Alternate Use

Alternate Use occurs when a service is arranged by the Telephone Company so that the customer can select different types of transmission at different times. A customer may use a service in any privately beneficial manner. However, where technical or engineering changes are required to effectuate an alternate use, the Telephone Company will make such special arrangements available on an individual case basis.

The arrangement required to transfer the service from one operation to the other (i.e., the transfer relay and control leads) will be rated and provided on an ICB as set forth in Section 12., Specialized Service or Arrangements, and filed in 31.12 following. The customer will pay the stated tariff rates for the Access Service rate elements for the service ordered (i.e., Channel Terminations, Channel Mileage [as applicable] and Optional Features and Functions/BSEs [if any]).

7.1.5 Special Facilities Routing

A customer may request that the facilities used to provide Special Access Service be specially routed. The regulations, rates and charges for Special Facilities Routing (i.e., Enhanced Access Diversity, Alternate Serving Wire Center, Avoidance, Diversity and Cable-Only) are set forth in this section and in Section 11. following.

7.1.6 Design Layout Report

At the request of the customer, the Telephone Company will provide to the customer the make-up of the facilities and services provided under this tariff as Special Access Service to aid the customer in designing its overall service. This information will be provided in the form of a Design Layout Report. The Design Layout Report will be provided to the customer at no charge, and will be reissued or updated whenever these facilities are materially changed.

ACCESS SERVICE

7. Special Access Service (Cont'd)

7.1 General (Cont'd)

7.1.7 Acceptance Testing

At no additional charge, the Telephone Company will, at the customer's request, cooperatively test, at the time of installation, the following parameters:

(A) For Voice Grade analog services and WATS Access Line Services, acceptance tests will include tests for loss, 3-tone slope, DC continuity, operational signaling, C-notched noise, and C-message noise when these parameters are applicable and specified in the order for service. Additionally, for Voice Grade Services, a balance (improved loss) test will be made if the customer has ordered the improved loss optional feature.

(B) For other analog services (i.e., Metallic, Telegraph Grade, Program Audio, Video, Wideband Analog, Wideband Data and WATS Access Line) and for digital services (i.e., Digital Data Service, DIGIROUTE℠ digital service II, DOVROUTE℠ service, High Capacity Service and FairPoint Enterprise Service) and optical services, acceptance tests will include tests for the parameters applicable to the service as specified in the order for service.

In addition to the above tests, Additional Cooperative Acceptance Testing for Voice Grade Service to test other parameters, as described in Section 13.3.5(B) following, is available at the customer's request. All tests results will be made available to the customer upon request.

7.1.8 Ordering Options and Conditions

- Special Access Service is ordered under the Access Order provisions set forth in Section 5. preceding. Also included in that section are other charges which may be associated with ordering Special Access Service (e.g., Service Date Change Charges, Cancellation Charges, etc.).

7. Special Access Service (Cont'd)

7.2 Service Descriptions

For the purposes of ordering, there are seventeen categories of Special Access Service. These are:

Metallic (MT)
Telegraph Grade (TG)
Voice Grade (VG)
Program Audio (AP)
Video (TV)
Wideband Analog (WA)
Wideband Data (WD)
Digital Data (DA)
High Capacity (HC)
WATS Access Line (WAL)
DIGIROUTE℠ digital service II (DDS II)
DOVROUTE℠ service (DOV)
FairPoint Enterprise Service (FES)
Advanced Video Services
Channel Extension Service
Facilities Management Service
Dedicated SONET Ring

Each service consists of a basic channel to which a technical specifications package (customized or predefined), if applicable, channel interface(s) and, when desired, optional features and functions or BSEs are added to construct the service desired by the customer. Each of the components of the service are described in this section.

Customized technical specifications packages will be provided where technically feasible. If the Telephone Company determines that the requested parameter specifications are not compatible, the customer will be advised and given the opportunity to change the order.

When a customized channel is ordered the customer will be notified whether Additional Engineering Charges apply. In such cases, the customer will be given an estimate of the hours to be billed before any further action is taken on the order.

ACCESS SERVICE

7. Special Access Service (Cont'd)

7.2 Service Descriptions (Cont'd)

The channel description specifies the characteristics of the basic channel and indicates whether the channel is provided between customer designated premises or between a customer designated premises and a Telephone Company Hub where functions such as bridging, multiplexing, Vertical Service (i.e., NRS or FRS) or FairPoint Enterprise Service are performed.

Information pertaining to the technical specifications packages indicates the transmission parameters that are available with each package. This information is displayed in a matrix with the transmission parameters listed down the left side and the packages listed across the top. Each package is identified by a code, e.g., VGC. The first two letters of the code indicate the category of Special Access Service to which the parameters are applicable. These two letter codes are shown above in parentheses following the category or Special Access Service. The letter "C" following the two letter code indicates the technical specifications package for a customized service. A numeric or alpha-numeric designation following the two letter code indicates the specific predefined package. For a customized service, the customer may select any parameters available with that category of service as long as the parameters are compatible. When appropriate, the Technical Reference which contains detailed specifications for the parameters is shown following the matrix.

Channel interfaces at each Point of Termination on a two-point service may be symmetrical or asymmetrical. On a multipoint service they may also be symmetrical or asymmetrical, but communications can only be provided between compatible channel interfaces. Only certain channel interfaces are compatible. These are set forth in 7.3.5 following in a combination format.

ACCESS SERVICE

7. Special Access Service (Cont'd)

7.2 Service Descriptions (Cont'd)

Only certain channel interface combinations are available with the predefined technical specifications packages. These are delineated in the Technical References set forth at the end of this 7.2. When a customized channel is requested, all channel interface combinations available with the specified type of service are available with the customized channel.

The optional features and functions are BSEs available with each type of Special Access Service are described in this section. Where appropriate, the optional features and functions are BSE information also indicates with which technical specifications packages they are available. Such information is displayed in a matrix with the optional feature or function or BSE listed down the left side and the technical specifications package listed across the top.

ACCESS SERVICE

7. Special Access Service (Cont'd)

7.2 Service Descriptions (Cont'd)

The Telephone Company will maintain existing transmission specifications on services installed prior to the effective date of this tariff except that the existing services with performance specifications exceeding the standards listed in this provision will be maintained at the performance levels specified in this tariff. All services installed after the effective date of this tariff will conform to the transmission specifications standards contained in this tariff or in the following Technical References for each category of service.

Metallic	TR-NPL-000336
Telegraph Grade	TR-NPL-000336
Voice Grade	TR-TSY-000335
	PUB 41004, Table 4
Program Audio	TR-NPL-000337
Video	NTR-74410, Issue No. 1
	TR-TSV-000338, Issue No. 2
	SN-INS-001532, Issue No. 1
	SR-NWT-001851
	SR-NPL-001434, Issue No. 1
Wideband Analog	TR-NPL-000339
Wideband Data	TR-NPL-000340
Digital Data	TR-NPL-000341
	PUB 62310
High Capacity	GR-342, Issue 1
	PUB 62411
	TR-NPL-000054
	TR-EOP-000063, Issue No. 3
	GR-253-CORE, Issue 2
WATS Access Line	TR-NWT-000334
	TR-NPL-000341

7. Special Access Service (Cont'd)

7.2 Service Descriptions (Cont'd)

The Telephone Company will maintain existing transmission specifications on services installed prior to the effective date of this tariff except that the existing services with performance specifications exceeding the standards listed in this provision will be maintained at the performance levels specified in this tariff. All services installed after the effective date of this tariff will conform to the transmission specifications standards contained in this tariff or in the following Technical References for each category of service.

DIGIROUTE℠ digital service II	TR-NPL-000157 PUB 74380, Issue No. 1 NTR 74374, Issue No. 2 NTR 74375, Issue No. 2
DOVROUTE℠ service	NTR 74374, Issue No. 2 NTR 74375, Issue No. 2
FairPoint Enterprise Services	TR-TSY-000335 PUB 41004, Table 4 TR-NPL-000157 PUB 62310 NTR 14374, Issue No. 2 NTR 14375, Issue No. 2 TR-NPL-000054 PUB 62411 GR-342, Issue 1 PRD 0004
Advanced Video Services	NTR-74415, Issue No. 1 GR-342, Issue 1 TR-NPL-000337 TR-TSV-000338, Issue No. 2 ANSI/SMPTE 259M - 1997 ANSI/SMPTE 310M – 1998 ANSI T1.102-1993 (R1999) ANSI T1.102.01-1996 ANSI T1.107-1995 ATSC Standard A/53 ATSC Standard A/54 SR-4274 GR388
Channel Extension Service	ESA 390/SA23-0394-00 ESA 390/SA22-7202-02 GA23-0383 ANSI X3.271
Dedicated SONET Ring	GR-253-CORE, Issue 3 GR-1374-CORE, Issue 1 ANSI T1.105-1995 ANSI/IEEE X3.802.3, X3.802.3z
Optical Network	GR-253-CORE, Issue 3 ANSI/IEEE X3.802.3, X3.802.3z, X3.802.3u, X3.296, X3.303

7. Special Access Service (Cont'd)

7.2 Service Descriptions (Cont'd)

7.2.1 Metallic Service

(A) Basic Channel Description

A Metallic channel is an unconditioned two-wire channel capable of transmitting low speed varying signals at rates up to 30 baud. This channel is provided by metallic or equivalent facilities. Metallic channels are provided between customer designated premises or between a customer designated premises and a Telephone Company Hub where bridging functions are performed. Interoffice metallic facilities will be limited in length to a total of five miles per channel.

(B) Technical Specifications Packages

		Package MT-		
Parameter	C	1	2	3
DC Resistance Between Conductors	X	X	X	
Loop Resistance	X			X
Shunt Capacitance	X			X

The technical specifications are delineated in Technical Reference TR-NPL-000336.

(C) Channel Interfaces

Compatible channel interfaces are set forth in 7.3.5(A) following.

7. Special Access Service (Cont'd)

7.2 Service Descriptions (Cont'd)

7.2.1 Metallic Service (Cont'd)

(D) Basic Service Elements (BSEs)

(1) Central Office Bridging Capability

(a) Three Premises Bridging - Provision of tip-to-tip and ring-to-ring connection in a central office of a metallic pair to a third customer designated premises.

(b) Series Bridging of up to 26 customer designated premises.

The following table shows the technical specifications packages with which the Basic Service Elements are available.

	Available with Technical Specifications Package MT -			
	C	1	2	3
Three Premises Bridging	X	X		X
Series Bridging	X		X	

7.2.2 Telegraph Grade Service

(A) Basic Channel Description

A Telegraph Grade channel is an unconditioned channel capable of transmitting binary signals at rates of 0-75 baud or 0-150 baud. This channel is furnished for half-duplex or duplex operation. Telegraph Grade channels are provided between customer designated premises or between a customer designated premises and a Telephone Company Hub.

7. Special Access Service (Cont'd)

7.2 Service Descriptions (Cont'd)

7.2.2 Telegraph Grade Service (Cont'd)

(B) Technical Specifications Packages

	Package TG-		
Parameter	C	1	2
Telegraph Distortion	X	X	X

The technical specifications are delineated in Technical Reference TR-NPL-000336.

(C) Channel Interfaces

Compatible channel interfaces are set forth in 7.3.5(B) following.

(D) Basic Service Elements (BSEs)

(1) Telegraph Bridging (two-wire and four-wire)

The following table shows the technical specifications packages with which the Basic Service Elements are available.

	Available with Technical Specifications Package TG-		
	C	1	2
Telegraph Bridging	X	X	X

ACCESS SERVICE

7. Special Access Service (Cont'd)

7.2 Service Descriptions (Cont'd)

7.2.3 Voice Grade Service

(A) Basic Channel Description

A Voice Grade channel is a channel which provides voice frequency transmission capability in the nominal frequency range of 300 to 3000 Hz and may be terminated two-wire or four-wire. Voice Grade channels are provided between customer designated premises or between a customer designated premises and a telephone company Hub.

(B) Technical Specification Packages

	Package VG-												
Parameter	C*	1	2	3	4	5	6	7	8	9	10	11	12
Attenuation Distortion	X	X	X	X	X	X	X	X	X	X	X	X	X
C-Message Noise	X	X	X	X	X	X	X	X	X	X	X	X	X
Echo Control	X	X	X	X		X		X	X			X	X
Envelope Delay Distortion	X						X	X	X	X	X	X	X
Frequency Shift	X						X	X	X	X	X	X	X
Impulse Noise	X					X	X	X	X	X	X	X	X
Intermodulation Distortion	X						X	X	X	X	X	X	
Loss Deviation	X	X	X	X	X	X	X	X	X	X	X	X	X
Phase Hits, Gain Hits, and Dropouts	X												
Phase Jitter		X						X	X	X	X	X	X
Signal-to-C Message Noise					X								
Signal-to-C Notch Noise	X					X	X	X	X	X	X	X	X

* The desired parameters are selected by the customer from the list of available parameters.

7. Special Access Service (Cont'd)

7.2 Service Descriptions (Cont'd)

7.2.3 Voice Grade Service (Cont'd)

(B) Technical Specification Packages (Cont'd)

The technical specifications for these parameters (except for dropouts, gain hits, and phase hits) are delineated in Technical Reference TR-TSY-000335. The technical specifications for dropouts, phase hits, and gain hits are delineated in Technical Reference PUB 41004, Table 4.

(C) Channel Interfaces

The following channel interfaces for Voice Grade service do not require signaling capability: DA, DB, DD, DE, DS, NO, PR and TF.

The following channel interfaces for Voice Grade service require signaling capability: AB, AC, CT, DX, DY, EA, EB, EC, EX, GO, GS, LA, LB, LC, LO, LR, LS, RV and SF.

Compatible channel interfaces are set forth in 7.3.5(C) following.

(D) Optional Features and Functions/Basic Service Elements (BSEs)

(1) Central Office Bridging Capability BSE

(a) Voice Bridging (two-wire and four-wire)

(b) Data Bridging (two-wire and four-wire)

(c) Telephoto Bridging (two-wire and four-wire)

(d) DATAPHONE® Select-A-Station Bridging with sequential arrangement ports or addressable arrangement ports

7. Special Access Service (Cont'd)

7.2 Service Descriptions (Cont'd)

7.2.3 Voice Grade Service (Cont'd)

(D) Optional Features and Functions/Basic Service Elements (BSEs) (Cont'd)

(1) Central Office Bridging Capability BSE

(e) Telemetry and Alarm Bridging

Split Band, Active Bridging
Passive Bridging
Summation, Active Bridging

(2) Central Office Multiplexing

Voice to Telegraph Grade: An arrangement that coverts a Voice Grade channel to Telegraph Grade channels using frequency division multiplexing.

(3) Conditioning BSE

Conditioning provides more specific transmission characteristics for Voice Grade services. C-Type conditioning controls attenuation distortion and envelope delay distortion. Sealing Current helps maintain continuity on dry metallic loops.

For two-point services, the parameters apply to each service. For multipoint services, the parameters apply to each mid-link or end-link. C-Type conditioning and Data Capability may be combined on the same service.

7. Special Access Service (Cont'd)

7.2 Service Descriptions (Cont'd)

7.2.3 Voice Grade Service (Cont'd)

(D) Optional Features and Functions/Basic Service Elements (BSEs) (Cont'd)

(3) Conditioning BSE (Cont'd)

(a) C-Type Conditioning

C-Type Conditioning is provided for the additional control of attenuation distortion and envelope delay distortion on data services. The attenuation distortion and envelope delay distortion specifications for C-Type Conditioning are:

Attenuation Distortion (Frequency Response) Relative to 1004 Hz		Envelope Delay Distortion	
Frequency Range (Hz)	Variation (db)	Frequency Range (Hz)	Variation mcs
400-2800	-1.0 to +2.0	1000-2600	100
300-3000	-1.0 to +3.0	800-2600	200
3000-3200	-2.0 to +6.0	600-2600	300
		500-2800	600
		500-3000	3000

7. Special Access Service (Cont'd)

7.2 Service Descriptions (Cont'd)

7.2.3 Voice Grade Service (Cont'd)

(D) Optional Features and Functions/Basic Service Elements (BSEs) (Cont'd)

(3) Conditioning BSE (Cont'd)

(b) Sealing Current Conditioning

Sealing Current Conditioning is provided to help maintain continuity on dry metallic loops. It is usually associated with four-wire DA or NO type channel interfaces.

7. Special Access Service (Cont'd)

7.2 Service Descriptions (Cont'd)

7.2.3 Voice Grade Service (Cont'd)

(D) Optional Features and Functions/Basic Service Elements (BSEs) (Cont'd)

(4) Customer Specified Premises Receive Level

This option allows the customer to specify the receive level at the Point of Termination. The level must be within a specific range on effective four-wire transmission. The ranges are delineated in Technical Reference TR-TSY-000335.

(5) Improved Return Loss (Echo Control)

(a) Improved return loss at a four-wire Point of Termination will provide improved echo control via an upgraded ELEPL. Telephone Company equipment may be required at the customers' premises where this option is ordered. The improved echo control parameters are delineated in Technical Reference TR-TSY-000335.

(b) Improved return loss at a two-wire Point of Termination will provide improved echo control via an upgraded return loss limit. Telephone Company equipment may be required at the customers' premises where this option is ordered. The improved echo control parameters are delineated in Technical Reference TR-TSY-000335.

7. Special Access Service (Cont'd)

7.2 Service Descriptions (Cont'd)

7.2.3 Voice Grade Service (Cont'd)

(D) Optional Features and Functions/Basic Service Elements (BSEs) (Cont'd)

(6) Data Capability

Data Capability (also known as D-Type Conditioning) provides transmission characteristics suitable for data communications. Specifically, Data Capability provides for the control of Signal to C-Notched Noise Ratio and intermodulation distortion. It is available for two-point services or multipoint services.

The Signal to C-Notched Noise Ratio and intermodulation distortion parameters for Data Capability are:

- Signal to C-Notched Noise Ratio is equal to or greater than 32db
- Intermodulation distortion:
- Signal to second order modulation products (R2) is equal to or greater than 38db
- Signal to third order modulation products (R3) is equal to or greater than 42db

When a service equipped with Data Capability is used for voice communications, the quality of the voice transmission may not be satisfactory.

7. Special Access Service (Cont'd)

7.2 Service Descriptions (Cont'd)

7.2.3 Voice Grade Service (Cont'd)

(D) Optional Features and Functions/Basic Service Elements (BSEs) (Cont'd)

(7) Telephoto Capability

Telephoto Capability provides transmission characteristics suitable for telephotographic communications. Specifically, Telephoto Capability is provided for the control of attenuation distortion and envelope delay distortion on telephotographic services. The attenuation distortion and envelope delay distortion parameters for Telephoto Capability are:

Attenuation Distortion (2204 Hz Reference)		Envelope Delay Distortion	
Frequency Range (Hz)	Variation (db)	Frequency Range (Hz)	Variation mcs
500-3000	-0.5 to +1.5	1000-2600110	
300-3200	-1.0 to +2.5	800-2800 180	

(8) Signaling Capability BSE

Signaling Capability provides for the process by which one customer designated premises alerts another customer designated premises on the same service with which it wishes to communicate.

(9) Selective Signaling Arrangement

An arrangement that permits code selective ringing for up to ten codes on a multipoint service.

7. Special Access Service (Cont'd)

7.2 Service Descriptions (Cont'd)

7.2.3 Voice Grade Service (Cont'd)

(D) Optional Features and Functions/Basic Service Elements (BSEs) (Cont'd)

(10) Transfer Arrangement BSE

An arrangement that affords the customer an additional measure of flexibility in the use of their access channel(s). The arrangement can be utilized to transfer a channel of a Special Access Service to another channel that terminates in either the same or a different customer designated premises. A key activated or dial-up control service is required to operate the transfer arrangement. A spare channel, if required, is not included as part of the option.

(11) Reserved for Future Use

7. Special Access Service (Cont'd)

7.2 Service Descriptions (Cont'd)

7.2.3 Voice Grade Service (Cont'd)

(E) Four-Wire/Two-Wire Conversions BSE

When a customer requests that an effective four-wire channel be terminated with a two-wire channel interface at the customer designated premises, a four-wire to two-wire conversion is required. The rate for the conversion is included as part of the basic Channel Termination rate.

7. Special Access Service (Cont'd)

7.2 Service Descriptions (Cont'd)

7.2.4 Program Audio Service

(A) Basic Channel Description

A Program Audio channel is a channel measured in Hz for the transmission of a complex signal voltage. The actual bandwidth is a function of the channel interface selected by the customer. Only one-way transmission is provided. Program Audio channels are provided between customer designated premises or between a customer designated premises and a Telephone Company Hub.

ACCESS SERVICE

7. Special Access Service (Cont'd)

7.2 Service Descriptions (Cont'd)

7.2.4 Program Audio Service (Cont'd)

(B) Technical Specifications Packages

	Package AP-				
Parameter	C*	1	2	3	4
Actual Measured Loss	X	X	X	X	X
Amplitude Tracking	X				
Crosstalk	X	X	X	X	X
Distortion Tracking	X				
Gain/Frequency Distortion	X	X	X	X	X
Group Delay	X				
Noise	X	X	X	X	X
Phase Tracking	X				
Short-Term Gain Stability	X				
Short-Term Loss	X				
Total Distortion	X	X	X	X	X

The technical specifications are delineated in Technical Reference TR-NPL-000337.

* The desired parameters are selected by the customer from the list of available parameters

7. Special Access Service (Cont'd)

7.2 Service Descriptions (Cont'd)

7.2.4 Program Audio Service (Cont'd)

(B) Technical Specifications Packages (Cont'd)

(C) Channel Interfaces

The following channel interfaces (CIs) define the bandwidths that are available for a Program Audio Channel:

CI	Bandwidth
PG-1	Nominal frequency from 50 to 15000 Hz
PG-3	Nominal frequency from 200 to 3500 Hz
PG-5	Nominal frequency from 100 to 5000 Hz
PG-8	Nominal frequency from 50 to 8000 Hz

Compatible channel interfaces are set forth in 7.3.5(D) following.

(D) Optional Features and Functions/Basic Service Elements (BSEs)

(1) Central Office Bridging Capability BSE

Distribution Amplifier

(2) Gain Conditioning BSE

Control of 1004 Hz AML at initiation of service to OdB ± 0.5 dB.

(3) Stereo

Provision of a pair of gain/phase equalized channels for stereo applications. (Additional AP channel must be ordered separately.)

7. Special Access Service (Cont'd)

7.2 Service Descriptions (Cont'd)

7.2.4 Program Audio Service (Cont'd)

(D) Optional Features and Functions/Basic Service Elements (BSEs) (Cont'd)

The following table shows the technical specifications packages with which the optional features and functions or BSEs are available.

	Available with Technical Specifications Package AP-				
	C	1	2	3	4
Central Office Bridging Capability	X	X	X	X	X
Gain Conditioning	X	X	X	X	X
Stereo	X				X

7.2.5 Video Service

Video Service requires transmission facilities which are suitable for the delivery of an analog signal over the entire distance between the originating and terminating locations involved. Where such existing facilities can not deliver an analog signal over the distance required, the Telephone Company may, at its option, elect to specially construct facilities subject to the provisions of 2.1.4 Provision of Services, and 5.1.3 Special Construction preceding or the customer may, at its option, elect to order an Advanced Video Service in Section 7.2.14 following which utilizes digital transmission between the originating and terminating locations involved.

(A) Channel Descriptions

(1) Broadcast Video Service

A Broadcast Video channel is a channel with one-way transmission capability for a standard 525 line/60 field monochrome, or National Television Systems Committee color, video signal of broadcast quality and one or two associated 5 kHz or 15 kHz audio signal(s). These associated audio signal(s) may be either diplexed or provided as one or two separate channels. At the customer's option, up to four associated 15 kHz signals may be provided as separated channels.

7. Special Access Service (Cont'd)

7.2 Service Descriptions (Cont'd)

7.2.5 Video Service (Cont'd)

(A) Channel Descriptions (Cont'd)

(1) Broadcast Video Service (Cont'd)

The third and/or fourth audio signal(s) are optional and will be provided as Additional Separate Audio Signals as set forth in (D)(2) following. The bandwidth for a video channel is either 30 Hz to 4.5 MHz or 30 Hz to 6.6 MHz. The provision and the bandwidth of the associated audio signal(s) is a function of the channel interface selected by the customer. Video channels are provided between customer designated premises or between a customer designated premises and a Telephone Company Hub.

(2) Supertrunking Transport Video Service

Supertrunking Transport Video Service (SVS) is a channel with a bandwidth of up to either 750 MHz or 870 MHz, providing one-way transmission of multiple Amplitude Modulation (AM) standard 525 line/60 field monochrome or National Television Services Committee (NTSC) color video signals and monaural or Broadcast Television Systems Committee (BTSC) stereo audio signals over fiber optic facilities. SVS channels are provided over fiber optic facilities between two customer designated premises or between a customer designated premises and a Telephone Company Hub.

The signal performance and quality of the video channel may be degraded by the number of signals and the end to end distance of the channel. The Telephone Company will work cooperatively with the customer to determine the number of video signals which can be provided over a single SVS channel.

The customer may upgrade from 750 to 870Mhz without incurring termination liability on the 750Mhz term contract provided the upgrade term is of equal or greater length of the remainder of the existing 750Mhz term contract. The customer will be required to pay the new rates associated with the 870Mhz service.

The Technical specifications are delineated in Technical Publications SR-INS-001532, Issue No. 1; SR-NPL-001434, Issue No. 1 and SR-NWT-001851, Issue No. 1.

7. Special Access Service (Cont'd)

7.2 Service Descriptions (Cont'd)

7.2.5 Video Service (Cont'd)

(A) Channel Descriptions (Cont'd)

(2) Supertrunking Transport Video Service (Cont'd)

For two-point service configurations, a single channel termination at each customer designated premises transmits or receives all of the video signals transported over the SVS channel. For multipoint service configurations, each video signal is provided over a Transmit only channel termination at one of the designated premises involved and a Receive only channel termination at each of the other designated premises involved. A Transmit channel termination provides an electrical to optical conversion of the customer's video signals allowing the customer to transmit, or originate, AM signals for transport over the SVS channel to one or more Receive channel terminations. A Receive channel termination provides an optical to electrical conversion allowing the customer to receive the multiple amplitude modulation signals.

At the option of the customer, SVS channels may be provided under a Service Discount Plan as specified in 7.4.10 following.

SVS channels may be moved in accordance with the regulations set forth in 7.4.5(B) and 7.4.10(C)(5) following.

7. Special Access Service (Cont'd)

7.2 Service Descriptions (Cont'd)

7.2.5 Video Service (Cont'd)

(A) Channel Descriptions (Cont'd)

(3) Fiber Based Multichannel Video Service (MVS)

Fiber Based Multichannel Video Service provides one-way Frequency Modulation (FM) transmission of one to sixteen standard 525 line/60 field monochrome or National Television Systems Committee (NTSC) color, video signals of less than broadcast quality over a single video channel. The bandwidth for each video signal is 6 MHz. One audio signal is provided with each video signal. The customer may order up to three Additional Separate Audio Signals or may elect to replace the original audio signal with one BTSC Stereo Audio Signal. Audio signal options are specified in 7.2.5(D) following.

At the option of the customer, MVS may be provided under a Service Discount Plan as specified in 7.4.10 following.

MVS channels are provided over fiber optic facilities for one-way transmission between customer designated premises or between a customer designated premises and a Telephone Company Hub. MVS is subject to the availability of suitable transmission facilities between the customer designated premises or Hubs involved. The Telephone Company will determine if such transmission facilities are available, or can be made available, and advice the customer of the facility status.

The signal performance and quality of the video channel may be degraded by the number of video signals, audio options and the end to end distance of the channel. The technical specifications are delineated in Technical Reference NTR-74410, Issue No. 1.

7. Special Access Service (Cont'd)

7.2 Service Descriptions (Cont'd)

7.2.5 Video Service (Cont'd)

(A) Channel Descriptions (Cont'd)

(3) Fiber Based Multichannel Video Service (MVS) (Cont'd)

MVS channels are one-way only. For two-point service configurations, each video signal is provided over a Transmit only channel termination at one of the designated premises involved and a Receive only channel termination at the other designated premises involved. For multipoint service configurations, each video signal is provided over a Transmit only channel termination at one of the designated premises involved and a Receive only channel termination at each of the other designated premises involved. Each customer designated premises must have at least one Transmit only and one Receive only channel termination, unless service is ordered with the One-way Transport optional feature. The One-way Transport optional feature enables a customer designated premises to have either Transmit only channel termination(s) or Receive only channel termination(s), but not both. When service is provided without the One-way Transport option, separate MSV channels are required for the Transmit only and Receive only channel terminations at each customer designated premises.

(a) Transmit Channel Termination

The Transmit channel termination (USOC TU9TF, TU9TE) allows a customer to transmit, or originate, one video signal for transport over the video channel to one or more Receive channel terminations. For each two-point or multipoint video channel, Transmit channel terminations may be provided at one point of termination only.

(b) Receive Channel Termination

The Receive channel termination (USOC TU9RF, TU9RE) allows a customer to receive an incoming video signal as originated over a Transmit channel termination.

ACCESS SERVICE

7. Special Access Service (Cont'd)

7.2 Service Descriptions (Cont'd)

7.2.5 Video Service (Cont'd)

(B) Technical Specifications Packages

	Package TV-		
Parameter	C*	1	2
Amplitude vs. Frequency Response	X		
Chrominance/Luminance Inequalities			
Gain	X	X	X
Delay	X	X	X
Chrominance/Luminance Intermodulation	X		
Chrominance Nonlinear Gain	X		
Chrominance Nonlinear Phase	X		
Crosstalk	X		X
Differential Gain	X	X	X
Differential Phase	X	X	X
Dynamic Gain (picture and sync signal)	X		
Field-Time Distortion	X	X	X
Gain/Frequency Distortion	X	X	X
Gain Stability	X	X	X
Insertion Gain	X	X	X
Line-Time Distortion	X	X	X
Long-Time Distortion	X	X	X
Luminance Nonlinearity	X		
Luminance Signal/CCIR			
Weighted Noise	X	X	X
Short-Time Distortion			
2 T Pulse	X	X	X
T - Bar Ringing	X	X	X

ACCESS SERVICE

7. Special Access Service (Cont'd)

7.2 Service Descriptions (Cont'd)

7.2.5 Video Service (Cont'd)

(B) Technical Specifications Packages (Cont'd)

	Package TV-		
Parameter	C*	1	2
Signal/15 kHz Flat Weighted Noise	X	X	X
Signal/Low Frequency Noise	X		
Stereo Gain Difference	X	X	
Stereo Phase Difference	X	X	
Total Harmonic Distortion	X	X	X
Transient Sync Signal Nonlinearity	X		
Video/Audio Delay Difference	X		

The technical specifications are delineated in Technical Reference TR-TSV-000338, Issue No. 2 and NTR-74410, Issue No.1.

7. Special Access Service (Cont'd)

7.2 Service Descriptions (Cont'd)

7.2.5 Video Service (Cont'd)

(C) Channel Interfaces

The following channel interfaces (CIs) define the manner of provision and number of audio signal(s) associated with a video channel:

CI	Description
2TV6-1	Combined video and one diplexed audio signal
2TV6-2	Combined video and two diplexed audio signals
2TV7-1	Combined video and one diplexed audio signal
2TV7-2	Combined video and two diplexed audio signals
4TV6-5	Video and one 5 kHz audio signal
4TV6-15	Video and one 15 kHz audio signal
4TV6-15A	Video and one 15 kHz audio signal
4TV6-17	Video and one composite BTSC stereo audio signal
4TV7-5	Video and one 5 kHz audio signal
4TV7-15	Video and one 15 kHz audio signal
4TV7-15A	Video and one 15 kHz audio signal
4TV7-17	Video and one composite BTSC stereo audio signal
6TV6-5	Video and two 5 kHz audio signal
6TV6-15	Video and two 15 kHz audio signals
6TV6-15A	Video and two 15 kHz audio signals
6TV7-5	Video and two 5 kHz audio signal
6TV7-15	Video and two 15 kHz audio signals
6TV7-15A	Video and two 15 kHz audio signals
8TV6-15A	Video and three 15 kHz audio signals
8TV7-15A	Video and three 15 kHz audio signals
10TV6-15A	Video and four 15 kHz audio signals
10TV7-15A	Video and four 15 kHz audio signals

Compatible channel interfaces are set forth in 7.3.5(E) following.

7. Special Access Service (Cont'd)

7.2 Service Descriptions (Cont'd)

7.2.5 Video Service (Cont'd)

(D) Optional Features and Functions/Basic Service Elements (BSEs)

(1) Video Bridging (USOC BCNVD)

Video Bridging enables Video Service to be provided in a multipoint configuration. The Video Bridging optional feature is not available for Part-time Broadcast Video Services.

(2) Additional Separate Audio Signals (USOC VAKS2, VAKS3, VAKS4)

Separate Audio Signals deliver individual audio baseband inputs as discrete audio signals. Up to two Additional Separate Audio Signals may be provided with a Broadcast Video Service which does not utilize microwave transmission facilities. Up to three Additional Separate Audio Signals may be provided for each video signal on a MVS channel. The audio signals associated with a single video signal on a MVS channel may not include a mix of Additional Separate Audio Signals and a BTSC Stereo Audio Signal.

(3) BTSC Stereo Audio Signal* (USOC VAKBX)

A BTSC (Broadcast Television Systems Committee) Stereo Audio Signal is an audio signal of stereo quality. One BTSC Stereo Audio Signal may be provided for each video signal on a MVS channel. The audio signals associated with a single video signal may not include a mix of Additional Separate Audio Signals and a BTSC Stereo Audio Signal.

(4) Rf Subcarrier Transport * (USOC R9D1X, R9DAX)

The Rf Subcarrier Transport option partitions the fiber optic facilities and MVS video terminating equipment to enable analog transmission capability of up to T1 capacity in addition to the video signals. A maximum of four Rf Subcarrier Transport options may be associated with a single MVS channel.

(5) One-way Transport* (USOC VTO)

The One-way Transport option enables a customer designated premises to be equipped with a single MVS channel which is capable of either transmitting or receiving video and audio signals. Transmit only and Receive only channel terminations will not be provided at the same customer designated premises if the One-way Transport option is elected

* Available with Fiber Based Multichannel Video Service only.

7. Special Access Service (Cont'd)

7.2 Service Descriptions (Cont'd)

7.2.5 Video Service (Cont'd)

(D) Optional Features and Functions/Basic Service Elements (BSEs) (Cont'd)

(6) Advanced Video Switching

Advanced Video Switching is available with certain Broadcast Video Services and Advanced Video Services in order to switch compatible video channels provided in premises to hub (TVOC) service configurations. Switching of Broadcast Video Service (BVS) is described below. This service is provided with an analog interface at the customer's designated premises. Switching of Advanced Video Services (45 Mbps Digital Video Transport Service (45 DVTS) and Serial Component Video Service (SCVS)) is described in 7.2.14(C)(2)(a) and 7.2.14(D)(2)(b) following, respectively. Advanced Video Services are transmitted digitally to the customer's designated premises. With this option, compatible video and/or advanced video services may be switched to create new end-to-end channels. A matrix in the video switch defines the mapping of services to specific input/output ports. Switching matrixes can be established in 32 X 32, 64 X 64, 96 X 64, 96 X 96, 128 X 96 and 128 X 128 input/output port configurations.

When ordering Advanced Video Switching, the Telephone Company will dedicate an entire video switching arrangement to the customer. Where facilities exists, the customer will also have the option to subscribe to Advanced Video Switching on an individual channel basis with each channel being connected to a port on a Telephone Company shared switching arrangement. Individual channel connections are subject to available capacity on the shared switch. Advanced switching of video services is provided at designated Telephone Company Video Operation Centers (TVOCs) as specified in NATIONAL EXCHANGE CARRIER ASSOCIATION INC., TARIFF F.C.C. No. 4.

Advanced Video Switching is provided on TV1, TV2 and TV15 Broadcast Video Services.

7. Special Access Service (Cont'd)

7.2 Service Descriptions (Cont'd)

7.2.5 Video Service (Cont'd)

(D) Optional Features and Functions/Basic Service Elements (BSEs) (Cont'd)

(6) Advanced Video Switching (Cont'd)

The following services (or combination of services) require a minimum switch capacity of 32 inputs and 32 outputs (32 X 32). Larger capacity switches are also available in configurations up to 128 X 128. At no time may the customer exceed the capacity of the video switch dedicated for its exclusive use.

- All BVS
- All 45 Mbps DVTS
- All SCVS
- Combination of BVS and/or 45 Mbps DVTS

The following combination of services require a minimum switch capacity of 64 inputs and 64 outputs (64 X 64). Larger capacity switches are also available in configurations up to 128 X 128. At no time may the customer exceed the capacity of the video switch dedicated for its exclusive use.

- Combination of BVS and SCVS
- Combination of 45 Mbps DVTS and SCVS

When more than one type of video or advanced video service is supported on the video switch, connection of different service types is prohibited (e.g., a BVS channel may not be connected to a 45 Mbps DVTS channel).

Video switching is available with full-time and part-time video services. Compatible video services may be switched in full-time to full-time, full-time to part-time or part-time to part-time service configurations.

7. Special Access Service (Cont'd)

7.2 Service Descriptions (Cont'd)

7.2.5 Video Service (Cont'd)

(D) Optional Features and Functions/Basic Service Elements (BSEs) (Cont'd)

(6) Advanced Video Switching (Cont'd)

Where facilities exist to provide service through a shared switching arrangement, the Telephone Company will perform all switching of video services connected through the shared switch. When the customer has a dedicated switching arrangement, the customer must perform all switching of video channels connected to the dedicated switching arrangement. A separate dial up line or special access service channel is required to connect the customer's designated premises to the dedicated switching arrangement located in the TVOC. One or more customers may utilize the same dedicated switching arrangement, however, one of the participating customers will be designated as the customer of record for management and control of all switching through that video switch arrangement. The customer of record will also be the responsible bill party for the dedicated switching arrangement.

The customer also has the option of requesting that the Telephone Company establish a video patch to connect compatible channels provided from different video switches. Video Patch Arrangements are set forth in (7) following.

Switching of video channels is limited to same service connections only (e.g., a 45 Mbps DVTS channel can only be connected to another 45 Mbps DVTS channel).

7. Special Access Service (Cont'd)

7.2 Service Descriptions (Cont'd)

7.2.5 Video Service (Cont'd)

(D) Optional Features and Functions/Basic Service Elements (BSEs) (Cont'd)

(6) Advanced Video Switching (Cont'd)

The rates and charges for the Advanced Video Switching option apply as follows:

- Dedicated Switching Arrangement

Advanced Video Switching rates and charges apply as a Premises to Hub Channel Termination for each connection to the TVOC. The rates are differentiated by the type of service involved. The Premises to Hub Channel Termination provides for the communications path between a customer designated premises and the dedicated switching arrangement at the TVOC where switching/patching is performed. This optional channel termination which is necessary for video switching applies in lieu of the basic channel termination. When the wire center serving the customer's designated premises and the TVOC are not located in the same wire center, channel mileage applies between the two wire centers involved.

7. Special Access Service (Cont'd)

7.2 Service Descriptions (Cont'd)

7.2.5 Video Service (Cont'd)

(D) Optional Features and Functions/Basic Service Elements (BSEs) (Cont'd)

(6) Advanced Video Switching (Cont'd)

In addition to the Premises to Hub Channel Terminations, a recurring monthly rate and nonrecurring charge applies for the switch capacity of the dedicated switching arrangement. The dedicated switching arrangement is provided for a term of either 60 months or 120 months as selected by the customer. Early Termination Charges apply if the dedicated switching arrangement is disconnected prior to the end of the commitment period, except as follows:

- The customer may, at any time prior to the expiration of a 60 month term plan, cancel its 60 month plan and establish a 120 month plan without the application of Early Termination Charges on the cancelled plan. Time in-service credit on the cancelled plan will be granted and applied towards the new extended plan.

- The rate for the longer commitment period will apply effective with the first bill day following extension of the commitment period and continue through the remainder of the commitment period associated with the extended plan. No adjustment for the increased discount associated with the extended plan will be made to the monthly rates already billed on the cancelled plan.

- The customer may, at any time prior to the end of the commitment period, upgrade to a larger switching matrix (e.g., from a 32 X 32 matrix to a 64 X 64 matrix) without the application of Early Termination Charges on the cancelled plan. However, the upgrade is subject to all applicable nonrecurring charges, and a new commitment period.

7. Special Access Service (Cont'd)

7.2 Service Descriptions (Cont'd)

7.2.5 Video Service (Cont'd)

(D) Optional Features and Functions/Basic Service Elements (BSEs) (Cont'd)

(6) Advanced Video Switching (Cont'd)

- Dedicated Switching Arrangement (Cont'd)

Termination liability will apply when the conditions above are not met and the customer service for the dedicated switching arrangement prior to expiration of the plan period. The Early Termination Charge for a 60-month plan is equal to 100 percent of the monthly charge for the unexpired portion of the first year and 15 percent of the monthly charge for the remainder of the plan. The Early Termination Charge for a 120-month plan is equal to 100 percent of the monthly charge for the unexpired portion of the first year and 10 percent of the monthly charge for the remainder of the plan.

Upon expiration of the term plan, the plan for the dedicated switching arrangement will automatically be renewed for the same term at the currently effective rate, or the customer may subscribe to a new plan. To terminate service without incurring new termination liabilities on the renewed plan, the customer must disconnect service within 90 days of the expiration date.

Video services connected to the switch may be provided at daily rates, month-to-month rates or under any Service Discount or Term Plan applicable to the service(s) involved.

7. Special Access Service (Cont'd)

7.2 Service Descriptions (Cont'd)

7.2.5 Video Service (Cont'd)

(D) Optional Features and Functions/Basic Service Elements (BSEs) (Cont'd)

(6) Advanced Video Switching (Cont'd)

- Shared Switching Arrangement

Where facilities exist and the customer is able to order Advanced Video Switching on a per channel basis, rates and charges apply as a Premises to Port Channel Termination for each service connected through the TVOC. This channel termination provides for the communications path between a customer designated premises and its associated serving wire center and for the port connection on the Telephone Company's shared video switch. This optional channel termination which is necessary for video switching applies in lieu of the basic channel termination for each connection to the TVOC. When the wire center serving the customer's designated premises and the TVOC are not located in the same wire center, channel mileage applies between the two wire centers involved.

For video service channels that are in service as of April 20, 2002, the Telephone Company will continue to connect compatible services together at the customer's requests. Upon expiration of the commitment period associated with that Service Discount or Term Plan, as applicable, or upon disconnection or move of one end of the channel, the customer must disconnect its existing service configuration and reconnect service on a premises to hub or premises to port basis if future switching of its video services is required. Reconnection of these services is subject to the rates and charges and terms and conditions applicable to the type of service involved and to the Advanced Video Switching option.

(7) Video Patching Arrangement

The Video Patching Arrangement provides for the Telephone Company patching of video services connected to different video switches which are located in the same TVOC. Patching will only be performed on services arranged in premises to hub service configurations. Daily and Monthly rates and charges apply for each Video Path Arrangement.

7. Special Access Service (Cont'd)

7.2 Service Descriptions (Cont'd)

7.2.6 Wideband Analog Service

(A) Basic Channel Description

A Wideband Analog channel is a channel with a bandwidth measured in kHz for the transmission of a wideband signal. The actual bandwidth is a function of the channel interface selected by the customer. Wideband Analog channels are provided between customer designated premises.

(B) Technical Specifications Packages

	Package WA-			
Parameter	1	2	3	4
Amplitude Stability	X	X		
Background Noise	X	X	X	X
Frequency Shift	X	X		
Gain/Frequency Characteristics of:				
- Group Connections	X		X	X
- Supergroup Connections		X		
Impulse Noise	X	X		
Net Loss Variations	X	X	X	X
Pilot Slot	X	X		
Spurious Single Frequency Tone	X	X		

The technical specifications are delineated in Technical Reference TR-NPL-000339.

7. Special Access Service (Cont'd)

7.2 Service Descriptions (Cont'd)

7.2.6 Wideband Analog Service (Cont'd)

(C) Channel Interfaces

The following channel interfaces (CIs) define the bandwidths that are available for a Wideband Analog channel:

CI	Bandwidth
AH-B	60 kHz to 108 kHz (Group)
AH-C	312 kHz to 552 kHz (Supergroup)
WD-1	300 Hz to 18 kHz
WD-2	28 kHz to 44 kHz
WD-3	29 kHz to 44 kHz

Compatible channel interfaces are set forth in 7.3.5(F) following.

7. Special Access Service (Cont'd)

7.2 Service Descriptions (Cont'd)

7.2.7 Wideband Data Service

(A) Basic Channel Description

The Wideband Data channel is an analog channel for the transmission of synchronous serial data at the rate of 19.2, 50.0, or 230.4 kbps or of asynchronous serial data at rates of up to 19.2, 50.0, or 230.4 kbps. Optional arrangements are available for transmission of synchronous serial data at 18.75 or 40.8 kbps. The actual bit rate is a function of the channel interface selected by the customer. This service requires a 303 Data Station(s). The 303 Data Station provides coupling between the customer's equipment and the wideband data transmission medium. A voiceband coordinating channel is also provided. Wideband Data channels are provided between customer designated premises.

(B) Technical Specifications Packages

	Package WD-		
Parameter	1	2	3
Error-Free Seconds	X	X	X

While in service, the monthly average of error-free seconds will be equal to or greater than 98.75%.

7. Special Access Service (Cont'd)

7.2 Service Descriptions (Cont'd)

7.2.7 Wideband Data Service (Cont'd)

(C) Channel Interfaces

The following channel interfaces (CIs) define the bit rates that are available for a Wideband Data channel:

CI	Bit Rate
WB-18S	18.75 kbps, synchronous
WB-19A	Up to 19.2 kbps, asynchronous
WB-19S	19.2 kbps, synchronous
WB-23A	Up to 230.4 kbps, asynchronous
WB-23S	230.4 kbps, synchronous
WB-40S	40.8 kbps, synchronous
WB-50A	Up to 50.0 kbps, asynchronous
WB-50S	50.0 kbps, synchronous

Compatible channel interfaces are set forth in 7.3.5(G) following.

(D) Optional Features and Functions

(1) Key Activated Transfer Arrangement

An arrangement that affords the customer an additional measure of flexibility in the use of their access channel(s). The arrangement can be utilized to transfer a channel of a Special Access Service to either a spare or working channel that terminates in either the same or a different customer designated premises. A key activated control service is required to operate the transfer arrangement. A spare channel, if required, is not included as a part of the option.

7. Special Access Service (Cont'd)

7.2 Service Descriptions (Cont'd)

7.2.7 Wideband Data Service (Cont'd)

(D) Optional Features and Functions (Cont'd)

(1) Key Activated Transfer Arrangement

The following table shows the technical specifications packages with which the optional features and functions are available.

	Available with Technical Specifications Package WD-		
	1	2	3
Key Activated Transfer Arrangement	X	X	X

7.2.8 Digital Data Service

(A) Basic Channel Description

A Digital Data channel is a channel for duplex four-wire transmission of synchronous serial data at the rate of 2.4, 4.8, 9.6, or 56.0 kbps. The actual bit rate is a function of the channel interface selected by the customer. The channel provides a synchronous service with timing provided by the Telephone Company through the Telephone Company's facilities to the customer in the received bit stream. Digital Data channels are only available via Telephone Company designated Hubs and are provided between customer designated premises or between a customer designated premises and a Telephone Company Hub.

ACCESS SERVICE

7. Special Access Service (Cont'd)

7.2 Service Descriptions (Cont'd)

7.2.8 Digital Data Service (Cont'd)

(B) Technical Specifications Packages

Parameter	Package DA-1	Package DA-2	Package DA-3	Package DA-4
Error-Free Seconds	X	X	X	X

The Telephone Company will provide a channel capable of meeting a monthly average performance equal to or greater than 99.875% error-free seconds while the channel is in service, if it is measured through a CSU equivalent which is designed, manufactured, and maintained to conform with the specifications contained in Technical Reference PUB 62310.

Voltages which are compatible with Digital Data Service are delineated in Technical Reference TR-NPL-000341.

(C) Channel Interfaces

The following channel interfaces (CIs) define the bit rates that are available for a Digital Data channel:

CI	Bit Rate
DU-24	2.4 kbps
DU-48	4.8 kbps
DU-96	9.6 kbps
DU-56	56.0 kbps

Compatible channel interfaces are set forth in 7.3.5(H) following.

7. Special Access Service (Cont'd)

7.2 Service Descriptions (Cont'd)

7.2.8 Digital Data Service (Cont'd)

(D) Optional Features and Functions/Basic Service Elements (BSEs)

(1) Central Office Bridging Capability BSE

(2) Transfer Arrangement BSE

An arrangement that affords the customer an additional measure of protection and/or flexibility in the use of their access channel(s) on a 1xN basis. The arrangement can be utilized to transfer a channel of a Special Access Service to either a spare or working channel that terminates in either the same or a different customer designated premises. This arrangement is only available at a Telephone Company designated Hub. A key activated or dial up control service is required to operate the transfer arrangement. A spare channel, if required, is not included as a part of the option.

(3) Secondary Channel Capability (SCC) BSE

Channel conditioning, provided from suitably equipped Hubs, that permits a 56 kbps channel to be used with a compatible customer-provided Data Service Unit which can derive a lower speed secondary channel at a synchronous rate of 2.666 kbps as described in Technical Reference TR-NPL-000157. The secondary channel operates in parallel with the primary 56 kbps channel and can provide simultaneous two-way transmission. The SCC is used for diverse network capabilities including, but not limited to, providing a lower speed data channel or access to a network management system to perform on line diagnostics and testing, data monitoring, traffic measurement, etc. This feature is available on a point to point or multipoint basis, where facilities permit, but is not available with DATAFLASH℠ packet switching service or DDS channels which require regenerative repeaters in the loop to the customer premises. Customers must agree to out-of-service periods required to add this feature to an existing 56 kbps channel.

7. Special Access Service (Cont'd)

7.2 Service Descriptions (Cont'd)

7.2.8 Digital Data Service (Cont'd)

(D) Optional Features and Functions/Basic Service Elements (BSEs) (Cont'd)

The following table shows the technical specifications packages with which the optional features and functions or BSEs are available.

	Available with Technical Specifications Package DA-			
	1	2	3	4
Central Office Bridging Capability	X	X	X	X
Secondary Channel Capability				X
Transfer Arrangement	X	X	X	X

7. Special Access Service (Cont'd)

7.2 Service Descriptions (Cont'd)

7.2.9 High Capacity Service

(A) Basic Channel Description

A High Capacity channel is a digital channel for the transmission of nominal 64.0 kbps*, 1.544 Mbps (FASTDATA℠ 1.544 Mbps digital service), 3.152 Mbps or 44.736 Mbps (FASTDATA℠ 45 Mbps digital service) isochronous serial data. The actual bit rate and framing formats are a function of the channel interface selected by the customer. High Capacity channels are provided between customer designated premises, between a customer designated premises and a Telephone Company Hub, between a customer designated premises and a wire center where connection to an advanced data service# occurs, or between a customer designated premises, Telephone Company multiplexing Hub or Telephone Company Frame Relay Service Hub and an Expanded Interconnection multiplexing node or virtual collocation arrangement**. Additionally, a High Capacity channel may connect collocated equipment within the same Telephone Company serving wire center, access tandem or remote node subject to the regulations set forth in Section 27 following.

In addition, High Capacity channels may be connected to DSR as set forth in Section 34.1 following, IDSR as set forth in Section 26.1.1 following, IntelliBeam Entrance Facility (DS3 High Capacity Service only) with a DS3 interface as set forth in Section 26.1.4 following or multiplexed IntelliBeam Broadband Transport as set forth in Section 26.1.5 following.

High Capacity channels may also be connected to the following Telephone Company provided services, provided that such connections are technically and operationally feasible, as determined by the Telephone Company:

in-service integrated optical service
in-service bandwidth on demand network

* Available only as a channel of a 1.544 Mbps facility between two Telephone Company digital Hubs or as a cross connect of two 2.4, 4.8, 9.6, 56.0 or 64.0 kbps channels of two 1.544 Mbps facilities at a digital Hub(s). The customer must provide system and channel assignment data. Digital Hubs include both Digital Data Hubs and High Capacity Multiplexing Hubs.

** Expanded Interconnection is not available with 3.152 Mbps or 44.736 Mbps High Capacity Service provided with an optical fiber interface.

Advanced data services include Telephone Company provided frame relay services, switched multi-megabit services, Internet Protocol services and ATM-cell relay services. Connections to advanced data services are provided by the Telephone Company where such connections are technically and operationally feasible, as determined by the Telephone Company.

7. Special Access Service (Cont'd)

7.2 Service Descriptions (Cont'd)

7.2.9 High Capacity Service (Cont'd)

(A) Basic Channel Description (Cont'd)

The High Capacity 44.736 Mbps Service is provided on digital (optical equipment and lightwave facilities selected by the Telephone Company, and it is provided only through serving wire centers equipped to furnish such service. At the customer designated premises, an optical fiber interface and digital optical equipment convert the signal from optical to electrical. A 110 volt AC, 15 amperes, separately fused, non-switched controlled, single power outlet must be provided by the customer at the customer designated premises.

Optical Fiber Interface Option

At the option of the customer, 44.736 Mbps (DS3) Service may be provided with an optical interface at four levels of capacity, (i.e., as three (135 Mbps), twelve (560 Mbps) or 48 (2.488 Gbps) groups of 44.736 Mbps channels. The customer may order a minimum of 1 and a maximum of 3 DS3 channels for the 135 Mbps capacity; a minimum of 2 and a maximum of 9 DS3 channels for the 405 Mbps capacity; a minimum of 2 and a maximum of 12 DS3 channels for the 560 Mbps capacity; or a minimum of 7 and a maximum of 48 DS3 channels for the 2.488 Gbps capacity. This service may be provided between a customer designated premises and a Telephone Company Hub subject to the availability of facilities under the following two options.

7. Special Access Service (Cont'd)

7.2 Service Descriptions (Cont'd)

7.2.9 High Capacity Service (Cont'd)

(A) Basic Channel Description (Cont'd)

Optical Fiber Interface Option (Cont'd)

(1) Option 1

An optical channel from a Telephone Company Serving Wire Center equipped to furnish such service to an optical fiber interface at the customer's premises. The customer will provide Optical Line Terminating Multiplexing (OLTM) or SONET equipment in lieu of Telephone Company provided digital optical equipment.

(2) Option 2*

The customer's optical cable is spliced to the Telephone Company's optical cable at a Telephone Company designated fiber meet point, or the customer shall make available at the meet point an additional length of fiber optic cable for the purpose of connecting the fiber optic cable to the Telephone Company's central office. The latter option of providing an additional length of fiber optic cable shall be available to the customer only where facilities permit. The location of the fiber meet point is considered to be a customer designated premises for purposes of administering regulations and rates contained in this tariff. The customer provides the OLTM at the customer designated premises. The Telephone Company will work cooperatively with the customer to select the Telephone Company designated fiber meet point which may be associated with the normal serving wire center or, at the customer's option, the fiber meet point may be at a location associated with an alternate serving wire center. In the latter case, interoffice channel mileage will be calculated from the alternate serving wire center.

* Option 2 will only be provided on DS3 with an optical fiber interface option which is in-service or on order as of August 29, 2001

7. Special Access Service (Cont'd)

7.2 Service Descriptions (Cont'd)

7.2.9 High Capacity Service (Cont'd)

(A) Basic Channel Description (Cont'd)

Optical Fiber Interface Option (Cont'd)

(2) Option 2* (Cont'd)

Under Option 2, the customer's fiber for the midspan meet must be compatible with the fiber employed by the Telephone Company. The Telephone Company will perform the splice at a charge as specified in 30.7.9 (E) following for price band charges and 31.7.9(E) following for all other charges. Responsibility for maintenance, repair and disconnection of the splice shall be with the Telephone Company.

When an additional length of fiber optic cable is made available by a customer at the meet point location, the Telephone Company shall designate the length of the additional fiber optic cable and shall complete the installation of the fiber optic cable to the central office. All rights, title and interest in the additional length of fiber optic cable shall be transferred, free of any and all liens and encumbrances, by the customer to the Telephone Company for $1.00, the receipt and sufficiency of which is hereby acknowledged by the customer. The Telephone Company shall clearly mark the fiber optic cable at the meet point location so as to designate where the customer provided portion of the cable ends and where the Telephone Company cable begins. The transfer shall be deemed to have taken place as of the time the Telephone Company assumes physical control of the additional length of fiber optic cable to begin connection of that cable to the Telephone Company's central office.

* Option 2 will only be provided on DS3 with an optical fiber interface option which is in-service or on order as of August 29, 2001

7. Special Access Service (Cont'd)

7.2 Service Descriptions (Cont'd)

7.2.9 High Capacity Service (Cont'd)

(A) Basic Channel Description (Cont'd)

Optical Fiber Interface Option (Cont'd)

(2) Option 2* (Cont'd)

Within each capacity level, individual 44.736 Mbps channels may be derived from SONET or OLTM equipment at the Telephone Company's Hub. The customer may request that the SONET or OLTM equipment be located in a wire center other than the normal serving wire center. The appropriate Channel Mileage rate will apply between the normal serving wire center and the wire center designated by the customer. The customer must provide any device that supports an OC3, OC12 or OC48 interface as described in GR-253-CORE, Issue 3 for Synchronous Optical Network (SONET) Transport Systems in lieu of Telephone Company provided digital optical equipment. DS3 with an optical fiber interface option which is in-service or on order as of August 29, 2001 may employ customer-provided Optical Line Terminating Multiplexing Equipment (OLTM) in lieu of Telephone Company provided digital optical equipment. Customer provided OLTM equipment must be compatible with the OLTM equipment employed by the Telephone Company. The Telephone Company employs the following OLTM equipment:

- NEC Model 1840A for 135 Mbps capacity*
- Rockwell Model 1565D for 560 Mbps capacity*

The selection of the OLTM or SONET equipment will determine the characteristics of the standard interface. The Telephone Company may request cooperative testing through the customer provided equipment (e.g., fiber, OLTM, etc.) at the time of installation or in the event of a transmission failure.

* The use of OLTM equipment is limited as described above.

ACCESS SERVICE

7. Special Access Service (Cont'd)

7.2 Service Descriptions (Cont'd)

7.2.9 High Capacity Service (Cont'd)

(B) Technical Specifications Packages

	Package HC-			
Parameters	0	1	1C	3
Error-Free Seconds		X		
Bit Error Rate				X
Error-Free Transmission				X

A channel with technical specifications package HC1 will be capable of an error-free second performance of 98.75% over a continuous 24 hour period as measured at the 1.544 Mbps rate through a CSU equivalent which is designed, manufactured, and maintained to conform with the specifications contained in Technical References PUB 62411 and TR-NPL-000054.

A Channel with technical specifications package HC3 is designed to provide an average performance of at least 99% error-free transmission measured over a continuous 24 hour period at the Company interface. The Technical Specifications are delineated in GR-342, Issue 1.

The technical specifications for High Capacity Service provided to an Expanded Interconnection multiplexing node are delineated in the Technical Reference Publications specified in Section 28.1.5 and 28.4.5 following.

7. Special Access Service (Cont'd)

7.2 Service Descriptions (Cont'd)

7.2.9 High Capacity Service (Cont'd)

(C) Channel Interface

The following channel interfaces (CIs) define the bit rates that are available for a High Capacity and/or FairPoint Enterprise SONET Access Services channel:

CI	Bit Rate
CS-15*	1.544 Mbps (DS1)
DS-1S	1.544 Mbps (DS1)
DS-15*	1.544 Mbps (DS1)
DS-31	3.152 Mbps (DS1C)
DS-44, 44A, or 44I	44.736 Mbps (DS3)
FC-13	135 Mbps – Optical
FC-40	405 Mbps – Optical
FC-54	560 Mbps – Optical
SO-A**,C**,E**, OR F**	155.520 Mbps – Optical (SONET)
SO-A**,B**,C**,D**,E**, OR F**	622.080 Mbps and 2.488 Gbps - Optical (SONET)
ST-A	51.840 Mbps (STS-1)

Compatible channel interfaces are set forth in 7.3.5(I) following.

* A 64.0 kbps channel is available as a channel(s) of a 1.544 Mbps facility to a Telephone Company Hub.

** B OR U

7. Special Access Service (Cont'd)

7.2 Service Descriptions (Cont'd)

7.2.9 High Capacity Service (Cont'd)

(D) Optional Features and Functions/Basic Service Elements (BSEs)

(1) Automatic Loop Transfer BSE

The Automatic Loop Transfer provides protection on a 1xN basis against failure of the facilities between a customer designated premises and the wire center serving that premises. Protection is furnished through the use of a switching arrangement that automatically switches to a spare channel when a working channel fails. The spare channel is not included as a part of the option. This option requires compatible equipment at both the serving wire center and the customer designated premises. The equipment at the customer's designated premises must be compatible with that provided by the Telephone Company in the serving wire center. The customer is responsible for providing the equipment at its premises. This option is not available for channels with the Clear Channel Capability feature.

(2) Transfer Arrangement BSE

An arrangement that affords the customer an additional measure of flexibility in the use of their access channel(s). The arrangement can be utilized to transfer a channel of a Special Access Service to either a spare or working channel that terminates in either the same or a different customer designated premises. A key activated or dial-up control service is required to operate the transfer arrangement. A spare channel, if required, is not included as part of the option.

7. Special Access Service (Cont'd)

7.2 Service Descriptions (Cont'd)

7.2.9 High Capacity Service (Cont'd)

(D) Optional Features and Functions/Basic Service Elements (BSEs) (Cont'd)

(3) Central Office Multiplexing

NATIONAL EXCHANGE CARRIER ASSOCIATION, INC. TARIFF F.C.C. NO. 4 identifies the serving wire centers where the following Central Office Multiplexing BSEs or options are available.

(a) DS3 to DS1 BSE

An arrangement that converts a 44.736 Mbps channel to 28 DS1 channels using digital time division multiplexing.

(b) DS1C to DS1

An arrangement that converts a 3.152 Mbps channel to two DS1 channels using digital time division multiplexing.

(c) DS1 to Voice BSE

An arrangement that converts a 1.544 Mbps channel to 24 channels for use with Voice Grade Services. A channel(s) of this DS1 to the Hub can also be used for a Digital Data Service, DIGIROUTE℠ digital service II, DOVROUTE℠ service, Program Audio or Metallic Service.

(d) Reserved for Future Use

7. Special Access Service (Cont'd)

7.2 Service Descriptions (Cont'd)

7.2.9 High Capacity Service (Cont'd)

(D) Optional Features and Functions/Basic Service Elements (BSEs) (Cont'd)

(3) Central Office Multiplexing (Cont'd)

(e) DS1 to DSO BSE

An arrangement that converts a 1.544 Mbps channel to 24 64.0 kbps channels using digital time division multiplexing.

(f) DSO to Subrate BSE

An arrangement that converts a 64.0 kbps channel to subspeeds of up to twenty 2.4 kbps, ten 4.8 kbps, or five 9.6 kbps channels using digital time division multiplexing. This arrangement is available with Digital Data Service only.

(4) Clear Channel Capability (CCC)

CCC provides a Bipolar with Eight Zero Substitution (B8ZS) encoding technique that allows a customer to transport 1.536 Mbps information rate signals over a 1.544 Mbps High Capacity Channel with no constraint on the quantity or sequence of ones (mark) and zero (space) bits. This arrangement allows customers to derive 64 kbps clear channels. This service is provided only on 1.544 Mbps High Capacity Channels between two customer designated premises and is subject to availability of facilities. This arrangement requires the customer-provided multiplexing equipment to be compatible with the B8ZS line code as specified in Technical Reference TR-NPL-000054 and GR-342, Issue 1.

7. Special Access Service (Cont'd)

7.2 Service Descriptions (Cont'd)

7.2.9 High Capacity Service (Cont'd)

(D) Optional Features and Functions/Basic Service Elements (BSEs) (Cont'd)

(5) Alternate Serving Wire Center

An optional feature in which High Capacity Channel Terminations are provided over an alternate route to a serving wire center other than that normally serving the customer's designated premises. The Telephone Company will designate the serving wire center to be used. The mileage used to determine the monthly rate for channel mileage is based on the normal serving wire center associated with the customer designated premises as described in 7.1.2 preceding. This feature may also be used in conjunction with DS3 services provided over IntelliBeam Entrance Facility (IEF) service as set forth in Section 26.1.4 following. This feature is not available with Shared Use Digital High Capacity Services or 44.736 Mbps High Capacity Service with the Optical Fiber Interface Option provided under Option 2.

When a customer orders the Alternate Serving Wire Center Optional Feature, the Alternate Serving Wire Center Rate as specified in 30.7.9(C)(5) following for price band rates and 31.7.9(C)(5) following for all other rates applies in addition to the Channel Termination and Channel Mileage Rates and Charges for each applicable High Capacity Service.

ACCESS SERVICE

7. Special Access Service (Cont'd)

7.2 Service Descriptions (Cont'd)

7.2.9 High Capacity Service (Cont'd)

(D) Optional Features and Functions/Basic Service Elements (BSEs) (Cont'd)

(5) Alternate Serving Wire Center (Cont'd)

The rates for Alternate Serving Wire Center apply per point of termination.

Subject to the provisions of 2.1.4, Provision of Services, and 5.1.3, Special Construction preceding, Alternate Serving Wire Center will be provided within one year from receiving a customer request.

Portland, ME
Nashua, NH
Manchester, NH
Burlington, VT

7. Special Access Service (Cont'd)

7.2 Service Descriptions (Cont'd)

7.2.9 High Capacity Service (Cont'd)

(D) Optional Features and Functions/Basic Service Elements (BSEs) (Cont'd)

(5) Alternate Serving Wire Center (Cont'd)

In all other exchanges, the provisioning interval is within two years. In the case of special construction, the provisioning intervals are within one or two years, as specified preceding, from the date the special construction agreement is signed by the customer.

ACCESS SERVICE

7. Special Access Service (Cont'd)

7.2 Service Descriptions (Cont'd)

7.2.9 High Capacity Service (Cont'd)

(D) Optional Features and Functions/Basic Service Elements (BSEs) (Cont'd)

(5) Alternate Serving Wire Center (Cont'd)

Example: High Capacity Service connecting two customer designated premises with the Alternate Serving Wire Center Optional Feature at Premises B.

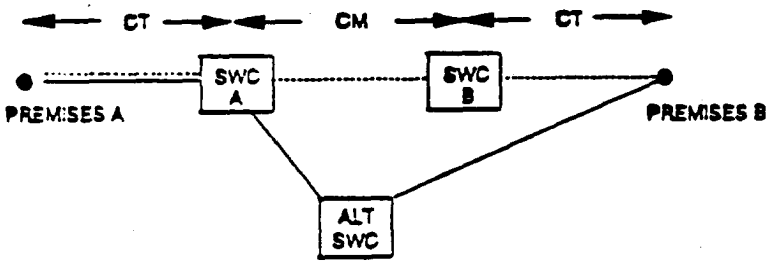

---- Billed Route for High Capacity Service
---- Physical Route for High Capacity Service
CT - Channel Termination*
CM - Channel Mileage*
SWC - Serving Wire Center
ALT SWC - Alternative Serving Wire Center**

Applicable Rate Elements Are:
- Channel Termination (2 applicable)
- Channel Mileage (1 section)
- Alternate Serving Wire Center Optional feature (1 applicable)

* The Channel Mileage and Channel Termination Rates are calculated as if the service were physically routed through the normal serving wire center.

** The Alternate Serving Wire Center Optional Feature Rate applies in addition to the Channel Mileage and Channel Termination Rates.

7. Special Access Service (Cont'd)

7.2 Service Descriptions (Cont'd)

7.2.9 High Capacity Service (Cont'd)

(D) Optional Features and Functions/Basic Service Elements (BSEs) (Cont'd)

(6) Shared Billing Arrangement

A Shared Billing Arrangement allows for the connection of one or more Service Users' Special Access, Switched Access or Common Channel Signaling Access Services to a Host Customer's multiplexed High Capacity Service in Telephone Company serving wire centers designated as Hubs capable of multiplexing High Capacity services, with the Telephone Company maintaining separate records and billing for each. The Telephone Company will split the billing after the multiplexer for each service connected to the High Capacity multiplexer.

A Shared Billing Arrangement also allows for the connection of one or more Service Users' DS1, DS3 or STS1 Switched Access Services, Common Channel Signaling Access Services, Special Access Services or an IBT Service to a Host Customer's IDSR or DSR at wire centers with IDSR or DSR SONET multiplexing capability, with the Telephone Company maintaining separate records and billing for each. For each service connected to IDSR or DSR, the Telephone Company will split the billing at the CO Node (i.e., SONET multiplexer) with any associated central office extension and, when applicable, associated premises port being the responsibility of the Service User.

Each customer will be billed for those rate elements associated with its own portion of the service configuration. For ThruPath Service connections, the Service User (i.e., the ordering customer) will be billed for the channel between the two multiplexers of the High Capacity Services. Under no circumstances will the rates or charges for individual rate elements be split. This arrangement is only available when

(1) a 44.736 Mbps High Capacity Service is multiplexed to a 1.544 Mbps High Capacity Service; or
(2) a 1.544 Mbps High Capacity Service is multiplexed to a Voice Grade or DDS II* service or a combination of Voice Grade and DDS II services; or
(3) a Switched Access or Common Channel Signaling Access Service is provided over a High Capacity or SONET facility under regulations set forth in Section 5.2.7 preceding; or
(4) IDSR or DSR is provided to a CO Node for Add/Drop Multiplexing. Hubbing locations are set forth in the NATIONAL EXCHANGE CARRIER ASSOCIATION, INC., TARIFF F.C.C. NO. 4.

* DDS II and 1.544 Mbps High Capacity Service Hubs must be located in the same building.

7. Special Access Service (Cont'd)

7.2 Service Descriptions (Cont'd)

7.2.9 High Capacity Service (Cont'd)

(D) Optional Features and Functions/Basic Service Elements (BSEs) (Cont'd)

(6) Shared Billing Arrangement (Cont'd)

Each customer may order its individual portion of the multiplexed service separately from the Telephone Company. A ThruPath Service connection may only be ordered by the Service User. The ordering customer(s) must obtain and provide a copy of a signed letter(s) of authorization, as described in 5.2 preceding, to the Telephone Company when placing an ordered for a Shared Billing Arrangement. The letter of authorization must be signed by both the Host Customer and the Service User and include the applicable Connecting Facility Assignments and Billing Account Numbers of the customers involved.

7. Special Access Service (Cont'd)

7.2 Service Descriptions (Cont'd)

7.2.9 High Capacity Service (Cont'd)

(D) Optional Features and Functions/Basic Service Elements (BSEs) (Cont'd)

(6) Shared Billing Arrangement (Cont'd)

Each customer will be billed the applicable tariff rates and charges set forth in Section 30. following for price band rates and charges and Section 31. following for all other rates and charges for its individual service(s). Except for ThruPath Service connections, the rates and charges for Central Office Multiplexing will be the responsibility of the Host Customer. For ThruPath Service connections, both the Host Customer and the Service User will be responsible for the rates and charges associated with their own Central Office Multiplexing arrangement.

Each customer shall be responsible for reporting service outages for its portion of the multiplexed service. Out of service adjustments will be handled in accordance with Credit Allowance for Service Interruptions as set forth in Section 2.8.1.1 preceding. The Maintenance of Service charge applies, as set forth in Section 13.3.1 following, to the customer whose service is reported in trouble.

Under a Shared Billing Arrangement, the Telephone Company may share with the Host Customer record information pertaining to the multiplexed service(s) of the Service User(s). For ThruPath Service connections, the Telephone Company may also share with the Service User record information pertaining to the multiplexed service(s) of the Host Customer(s). Such disclosure will be at the sole discretion of the Telephone Company as necessary to perform billing reconciliations or other functions required in connection with maintaining separate account records.

7. Special Access Service (Cont'd)

7.2 Service Descriptions (Cont'd)

7.2.9 High Capacity Service (Cont'd)

(D) Optional Features and Functions/Basic Service Elements (BSEs) (Cont'd)

(6) Shared Billing Arrangement (Cont'd)

A customer may request a Shared Billing Arrangement for an existing multiplexed High Capacity or IntelliBeam® Dedicated SONET Ring with an existing Service Discount Plan or Commitment Discount Plan*. The regulations pertaining to such requests are set forth in Section 7.4.10 following for the Service Discount Plan, Section 25.1 following for the Commitment Discount Plan, or Section 25.2 following for the National Discount Plan.

Section 7.4.11 contains rate regulations specific to Shared Billing Arrangement.

* IntelliBeam Dedicated SONET Ring is not provided under a Commitment Plan.

7. Special Access Service (Cont'd)

7.2 Service Descriptions (Cont'd)

7.2.9 High Capacity Service (Cont'd)

(D) Optional Features and Functions/Basic Service Elements (BSEs) (Cont'd)

(7) Enhanced Access Diversity (EAD)

EAD provides three levels of diversity on the transmission facilities for two or more 1.544 Mbps and 44.736 Mbps services provided over not more than two different physical routes. The customers with EAD will be advised on a quarterly basis of the design of each service with EAD. This offering utilizes existing physically diverse facilities. Should facilities not be available, the service may be subject to special construction as specified in 5.1.3 preceding. The levels are described following.

Supreme

This optional feature is only available for services with the ASWC feature and guarantees diversity of the interoffice facilities and central offices between the first manholes located outside the alternate serving wire centers.

When a customer orders the Supreme EAD Optional Feature, the Supreme Rate as specified in 30.7.9(C)(7) following for price band rates and 31.7.9(C)(7) following for all other rates applies in addition to the Channel Termination, Channel Mileage and ASWC Rates and Charges for each applicable High Capacity Service.

ACCESS SERVICE

7. Special Access Service (Cont'd)

7.2 Service Descriptions (Cont'd)

7.2.9 High Capacity Service (Cont'd)

(D) Optional Features and Functions/Basic Service Elements (BSEs) (Cont'd)

(7) Enhanced Access Diversity (EAD) (Cont'd)

Supreme (Cont'd)

Example: High Capacity Service connecting two customer Designated premises with the Supreme EAD and ASWC Optional Features.

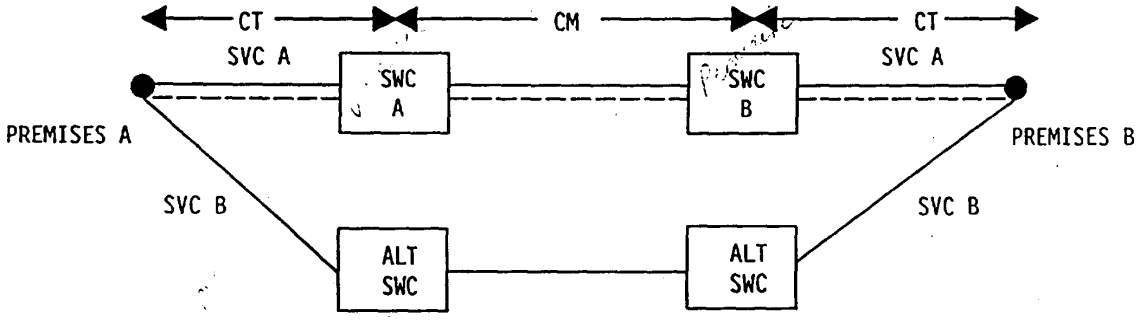

———— Billed Route for both High Capacity Services
_____ Physical Routes for High Capacity Services A and B
CT - Channel Termination*
CM - Channel Mileage*
SWC - Serving Wire Center
ALT SWC - Alternate Serving Wire Center

Applicable Rate Elements Are:
- Channel Termination (4 applicable)
- Channel Mileage (2 sections)
- Supreme EAD Optional Feature for Service B (1 applicable)**
- ASWC Optional Feature for Service B (2 applicable)**

* The Channel Mileage and Channel Termination Rates are calculated as if the service were routed through the normal serving wire center.

** The Supreme EAD and ASWC Optional Feature Rates for Service B apply in addition to the Channel Termination and Channel Mileage Rates.

7. Special Access Service (Cont'd)

7.2 Service Descriptions (Cont'd)

7.2.9 High Capacity Service (Cont'd)

(D) Optional Features and Functions/Basic Service Elements (BSEs) (Cont'd)

(7) Enhanced Access Diversity (EAD) (Cont'd)

Deluxe

This optional feature for 1.544 Mbps and 44.736 Mbps Services provides for diverse routing of the Channel Terminations and Channel Mileage facilities for two or more services provided over not more than two different physical routes. This offering utilizes existing physically diverse facilities between the first manholes located outside the wire centers, or from the point of termination to the first manhole outside a customer premises. Should facilities not be available, the service may be subject to special construction as specified in 5.1.3 preceding.

Example: High Capacity Service connecting two customer designated premises with the Deluxe EAD Optional Feature.

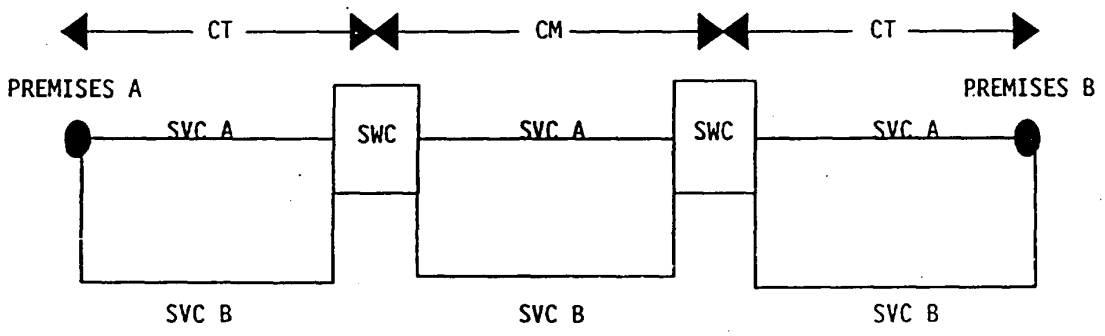

CT - Channel Termination
CM - Channel Mileage
SWC - Serving Wire Center

Applicable Rate Elements Are:
- Channel Termination (4 applicable)
- Channel Mileage (2 applicable)
- Deluxe EAD Optional Feature (1 applicable)*

7. Special Access Service (Cont'd)

7.2 Service Descriptions (Cont'd)

7.2.9 High Capacity Service (Cont'd)

(D) Optional Features and Functions/Basic Service Elements (BSEs) (Cont'd)

(7) Enhanced Access Diversity (EAD) (Cont'd)

Basic

This optional feature for 1.544 Mbps and 44.736 Mbps Services provides for diverse routing of the Channel Mileage facility for two or more services provided over not more than two different physical routes. This offering utilizes existing physically diverse facilities between the first manholes located outside the wire centers. Should facilities not be available, the service may be subject to special construction as specified in 5.1.3 preceding.

Example: High Capacity Service connecting two customer designated premises with the Basic EAD Optional Feature.

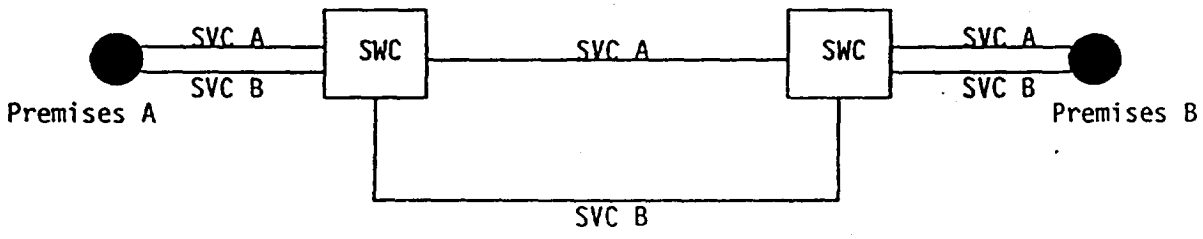

CT - Channel Termination
CM - Channel Mileage
SWC - Serving Wire Center

Applicable Rate Elements Are:
- Channel Termination (4 applicable)
- Channel Mileage (2 applicable)
- Basic EAD Optional Feature for Service B (1 applicable)*

* The Basic EAD Optional Feature Rate for Service B applies in addition to the Channel Mileage and Channel Termination Rates.

ACCESS SERVICE

7. Special Access Service (Cont'd)

7.2 Service Descriptions (Cont'd)

7.2.9 High Capacity Service (Cont'd)

(D) Optional Features and Functions/Basic Service Elements (BSEs) (Cont'd)

The following table shows the technical specifications packages with which the optional features and functions or BSEs are available.

	Available with Technical Specifications Package HC-			
	0	1	1C	3
Automatic Loop Transfer*		X		X
Central Office Multiplexing:				
DS3 to DS1				X
DS1C to DS1			X	
DS1 to DS0		X		
DS0 to Subrate**	X			
Transfer Arrangement		X		
Clear Channel Capability		X		
Supreme EAD		X		X
Deluxe EAD		X		X
Basic EAD		X		X

* Available with 44.736 Mbps Service at ICB rates and charges.

** Available only on a channel of a 1.544 Mbps facility to a Telephone Company Hub.

7. Special Access Service (Cont'd)

7.2 Service Descriptions (Cont'd)

7.2.10 WATS Access Line (WAL) Service

(A) Basic Channel Description

A WATS Access Line Service provides a channel for voice frequency transmission capability. The service provides a connection between a customer designated premises and a WATS Serving Office associated with the closed end of 800 Service, WATS or similar services. It is provided for use with Switched Access Service Arrangements as set forth in Section 6. preceding and subject to the following state requirements:

In New Hampshire, in compliance with the Public Utilities Commission's Order in Docket 86-310 and Maine, in compliance with the Public Utilities Commission's Order in Docket 86-237, intraLATA traffic will be blocked from those carriers who do not have a certificate of public convenience and an effective intrastate tariff. In such cases, intraLATA traffic will be completed by the Telephone Company.

7. Special Access Service (Cont'd)

7.2 Service Descriptions (Cont'd)

7.2.10 WATS Access Line (WAL) Service (Cont'd)

(A) Basic Channel Description (Cont'd)

WAL Service may, at the option of the customer, be arranged for originating calling only, terminating calling only or two way calling. WAL Service arranged for originating calling only which is not equipped with the End Office End User Line Service Screening optional feature, as detailed in Section 6. preceding, for two way calling or (for FGA, FGB, CSL BSA and CST BSA - Option 1) for terminating calling only is available from suitably equipped equal access WATS Serving Offices with FGD or CST BSA - Option 3 capability. WAL Service arranged for two way calling is not available with Telephone Company Centrex-CO Service.

As specified in Section 6. preceding, WAL Service is provided with either dial pulse or dual tone multifrequency address signaling and either loop start, ground start, E&M or reverse battery supervisory signaling. Reverse battery supervisory signaling is provided only for one-way WAL Service. The choice of the type of signaling is at the option of the customer and subject to the technical limitations identified in the Technical Reference TR-NWT-000334. WATS Access Line Service is provided as an effective two-wire or effective four-wire transmission path.

7. Special Access Service (Cont'd)

7.2 Service Descriptions (Cont'd)

7.2.10 WATS Access Line (WAL) Service (Cont'd)

(B) Technical Specification Packages

Parameter	Package WAL - 1	Package WAL - 2
Attenuation distortion	X	X
C-Message Noise	X	X
Echo Control	X	X
Envelop Delay Distortion	X	X
Frequency Shift	X	X
Impulse Noise	X	X
Intermodulation Distortion	X	X
Loss Deviation	X	X
Phase Jitter	X	X
Signal-to-C Notch Noise	X	X

The technical specifications for acceptance limits and immediate action limits are delineated in Technical Reference TR-NWT-000334.

7. Special Access Service (Cont'd)

7.2 Service Descriptions (Cont'd)

7.2.10 WATS Access Line (WAL) Service (Cont'd)

(C) Channel Interfaces

The following channel interfaces are available with WAL Service:
EA, EB, GO, GS, LO, LS, RV

Compatible channel interfaces are shown below:

Premises Interface	WSO Supervisory Signaling
06EA2.E	EA, EB
06EA2.M	EA, EB
08EB2.E	EA, EB
08EB2.M	EA, EB
02GS2	GO
02GS3	GO
04GS2	GO
02LS2	LO
02LS3	LO
04LS2	LO
02RV2.T	RV
02RV3.T	RV
02RV2.O	RV
02RV3.O	RV
04RV2.T	RV

7. Special Access Service (Cont'd)

7.2 Service Descriptions (Cont'd)

7.2.10 WATS Access Line (WAL) Service (Cont'd)

(D) Optional Features and Functions

(1) Improved two-wire voice transmission specifications

(a) Loss Deviation

The maximum Loss Deviation of the 1004 Hz loss relative to the Expected Measured Loss (EML) is -4.0 dB to +4.0 dB.

(b) Attenuation Distortion

The maximum Attenuation Distortion in the 404 to 2804 Hz frequency band relative to loss at 1004 Hz is -2.0 dB to +6.0 dB.

(c) C-Message Noise

The maximum C-Message Noise for the transmission path at the route miles listed is less than:

Route Miles	C-Message Noise
Less than 50	35 dBrnCO
51 to 100	37 dBrnCO
101 to 200	40 dBrnCO
201 to 400	43 dBrnCO
401 to 1000	45 dBrnCO

7. Special Access Service (Cont'd)

7.2 Service Descriptions (Cont'd)

7.2.10 WATS Access Line (WAL) Service (Cont'd)

(D) Optional Features and Functions (Cont'd)

(1) Improved two-wire voice transmission specifications (Cont'd)

(d) Return Loss
The Return Loss, expressed as Echo Return Loss (ERL) and Singing Return Loss (SRL), is equal to or greater than:

ERL	13.0 dB
SRL	6.0 dB

(2) Extension Service

Extension Service provides for an additional termination(s) of WAL Service at another building(s) in the same or a different LATA.

A WAL Service channel termination charge applies for the communications path between the customer designated premises and the serving wire center of that premises. In addition, where the wire center for the customer designated premises is different from the wire center for the premises where the WAL Service is terminated, channel mileage charges apply for the transmission facilities between the serving wire center of the customer designated premises and the WATS Serving Office. The Special Access Surcharge as specified in 7.4.2 may be applicable.

7. Special Access Service (Cont'd)

7.2 Service Descriptions (Cont'd)

7.2.10 WATS Access Line (WAL) Service (Cont'd)

(D) Optional Features and Functions (Cont'd)

(2) Extension Service (Cont'd)

Compatible channel interfaces are set forth in 7.3.5(J) following.

The following table shows the technical specifications packages with which the optional features and functions are available.

	Available with Technical Specifications Package WAL-	
	1	2
Improved Two Wire Voice Transmission Specifications	X	X
Extension Service	X	X

Certain other options associated with WAL Services are provided as either WATS Access Line Service, Line Termination or Common Switching Optional Features as defined in Section 6. preceding.

7. Special Access Service (Cont'd)

7.2 Service Descriptions (Cont'd)

7.2.11 DIGIROUTE℠ Digital Service II*

(A) Basic Channel Description

A DIGIROUTE℠ Digital Service II (DDS II) channel is a channel for the simultaneous transmission of digital data at the rate of 2.4, 4.8, 9.6, 19.2 56.0 or 64.0 kbps. The actual bit rate is a function of the channel interface selected by the customer. DDS II operates on a 24-hour-per-day seven-days-per-week basis in a full-duplex, synchronous transmission mode over facilities between customer-designated premises, between a customer-designated premises and a Telephone Company hub or between a customer-designated premises and a wire center where connection to an advanced data service# occurs. DDSII is subject to the availability of equipment, facilities and technical limitations. The CPE is a CSU/DSU and terminates at the demarcation as a 4-wire interface.

At the option of the customer, DDS II may be provided under a Service Discount Plan as specified in 7.4.10 following.

* As of September 1, 2001, DDSII is no longer available with a 2-wire interface (Universal Data Voice Multiplexer technology). The Telephone Company will continue to support DDSII with a 2-wire interface to customers who are subscribing to, or have on order, such service as of September 1, 2001. The customer may retain such service until such time as (i) its designated premises is moved; (ii) it requests that the Telephone Company hub be changed; or (iii) it requests a change to the service that results in a discontinuance and installation of a new service.

Advanced data services include Telephone Company provided frame relay services, switched multi-megabit services, Internet Protocol services and ATM-cell relay services. Connections to advanced data services are provided by the Telephone Company where such connections are technically and operationally feasible, as determined by the Telephone Company.

7. Special Access Service (Cont'd)

7.2 Service Descriptions (Cont'd)

7.2.11 DIGIROUTE℠ Digital Service II* (Cont'd)

(B) Technical Specification Packages

Parameter	Package DA-1	2	3	4	5	6
Error-Free Seconds	X	X	X	X	X	X

The Telephone Company will provide a channel capable of meeting a monthly average performance equal to or greater than 99.875% error-free seconds while the channel is in service, if it is measured through a CSU equivalent which is designed, manufactured and maintained to conform with the specifications contained in Technical Reference PUB 62310.

Voltages which are compatible with DIGIROUTE℠ Digital Service II are delineated in Technical Reference PUB 62507.

Channel Interface requirements necessary for Secondary Channel Capability are contained in Technical Reference TR-NPL-000157.

(C) Channel Interfaces

The following channel interfaces (CIs) define the bit rates that are available for a DIGIROUTE℠ digital service II channel:

CI	Bit Rate
DU-24	2.4 kbps
DU-48	4.8 kbps
DU-96	9.6 kbps
DU-19	19.2 kbps
DU-56	56.0 kbps
DU-64	64.0 kbps

Compatible channel interfaces are set forth in 7.3.5(K) following.

(D) Optional Features and Functions

(1) Central Office Bridging Capability

7. Special Access Service (Cont'd)

7.2 Service Descriptions (Cont'd)

7.2.11 DIGIROUTE℠ Digital Service II* (Cont'd)

(D) Optional Features and Functions* (Cont'd)

(2) Secondary Channel Capability (SCC)

Channel conditioning, provided from suitably equipped Hubs, that permits a DDS II channel to be used with a compatible customer-provided Data Service Unit which can derive a lower speed secondary channel at a synchronous rate as described in Technical Reference TR-NPL-000157. The secondary channel operates in parallel with the primary DDS II channel and can provide simultaneous two-way transmission of digital signals between customer premises. The SCC is used for diverse network capabilities including, but not limited to, providing a lower speed data channel or access to a network management system to perform on line diagnostics and testing, data monitoring, traffic measurement, etc. This feature is available on a point to point or multipoint basis, where facilities permit, but is not available with DATAFLASH℠ packet switching service or channels which require regenerative repeaters in the loop to the customer premises. Customers must agree to out-of-service periods required to add this feature to an existing channel. Secondary channel capability is not available with 64.0 kbps.

The following table shows the technical specifications packages with which the optional features and functions are available.

	Available with Technical Specifications Package DA-				
	1	2	3	4	5
Central Office Building Capability	X	X	X	X	X
Secondary Channel Capability	X	X	X	X	X

7. Special Access Service (Cont'd)

7.2 Service Descriptions (Cont'd)

7.2.12 DOVROUTE℠ Service

(A) Basic Channel Description

A DOVROUTE℠ service channel is a channel for both synchronous and asynchronous data transmission at speeds of 2.4, 4.8, 9.6 or 19.2 kbps. The actual bit rate is function of the channel interface selected by the customer. A DOVROUTE℠ service Channel Termination is provided as a derived channel of a local exchange service. The customer may transmit data over the DOVROUTE℠ service channel simultaneous with a voice transmission. The customer must provide a data voice multiplexer, as appropriate, at each customer designated premises.

DOVROUTE℠ service is provided where suitable facilities are available subject to the transmission limitations of the facilities and equipment used by the Telephone Company. It is provided between customer designated premises or between a customer designated premises and a Telephone Company Hub where bridging or multiplexing functions are performed. DOVROUTE℠service is also provided between a customer designated premises and a Network Controller Location.

(B) Technical Specifications

The technical specifications for the customer-provided data voice multiplexer are delineated in Technical Reference NTR-74374, Issue No. 2. The technical specifications for interfacing DOVROUTE℠ service with High Capacity Service are delineated in Technical Reference NTR-74375, Issue No. 2.

7. Special Access Service (Cont'd)

7.2 Service Descriptions (Cont'd)

7.2.12 DOVROUTE℠ Service (Cont'd)

(C) Channel Interfaces

The following channel interfaces (CIs) define the bit rates that are available for a DOVROUTE℠ service channel:

CI	Bit Rate
DV-BA	2.4 kbps
DV-BB	4.8 kbps
DV-BC	9.6 kbps
DV-BL	19.2 kbps

7.2.13 Reserved for Future Use

7. Special Access Service (Cont'd)

7.2 Service Descriptions (Cont'd)

7.2.14 Advanced Video Services

(A) Advanced Uncompressed Digital Video Service

(1) Channel Description

Advanced Uncompressed Digital Video Service (AUDVS) is a channel with one-way optical transmission capability of multiple, uncompressed, 8 bit or 10 bit encoded standard 525 line/60 field monochrome, or National Television Systems Committee (NTSC) color, video signals and their associated audio signals. When arranged with 8 bit encoding, each video signal within the AUDVS channel includes up to two associated 20 kHz audio signals or one Broadcast Television Systems Committee (BTSC) stereo audio signal. When arranged with 10 bit encoding, each video signal within the AUDVS channel includes up to four associated 20 kHz audio signals.

AUDVS channels are provided between customer designated premises for two-point configurations or between customer designated premises and a Telephone Company Hub where service may be bridged into a multipoint configuration.

7. Special Access Service (Cont'd)

7.2 Service Descriptions (Cont'd)

7.2.14 Advanced Video Services (Cont'd)

(A) Advanced Uncompressed Digital Video Service (Cont'd)

(1) Channel Description (Cont'd)

The Telephone Company will deploy the necessary video enabling equipment in order to satisfy the customer's order for its video and audio signal requirements. The customer must specify the audio signal(s) which are to be associated with each video signal within the AUDVS channel. The number and type of audio signal(s) are a function of the channel interface selected by the customer. Each video signal and its associated audio signal(s) will be designated as a channel termination for the purpose of applying the regulations and rates and charges for AUDVS as follows.

- Transmit Channel Termination (First or Additional)

  The Transmit Channel Termination allows one video signal and its associated audio signal(s) to be transmitted, or originated, over the AUDVS channel to one or more Receive Channel Terminations.

- Receive Channel Termination (First or Additional)

  The Receive Channel Termination allows receipt of one incoming video signal and its associated audio signal(s).

- Dual Transit Channel Termination

  The Dual Transmit Channel Termination allows the identical video and audio signals of one AUDVS channel to be transmitted over a second AUDVS channel. The Dual Transmit Channel Termination will also allow the identical video and audio signals which are received over one AUDVS channel to be retransmitted over a second AUDVS channel. In either case, the Dual Transmit Channel Termination will apply in lieu of any applicable Transmit Channel Terminations which would normally be required to transmit the video and audio signals over the second channel.

ACCESS SERVICE

7. Special Access Service (Cont'd)

7.2 Service Descriptions (Cont'd)

7.2.14 Advanced Video Services (Cont'd)

(A) Advanced Uncompressed Digital Video Service (Cont'd)

(1) Channel Description (Cont'd)

- Dual Transmit Channel Termination (Cont'd)

The Dual Transmit Channel Termination is available only where two AUDVS channels are provided at the same customer designated premises. One channel shall utilize the Dual Transmit Channel Termination and the other channel must utilize the applicable Transmit or Receive Channel Terminations required for the number of video signals provided.

AUDVS will be provided where suitable single mode fiber optic facilities exist to provide such service. Where suitable single mode fiber optic facilities do not exist, subject to the provisions of 2.1.4 Provision of Services, and 5.1.3 Special Construction preceding, AUDVS will be provided within one year from receiving a customer's request for service, or in the case of special construction, within one year from the date the special construction agreement is signed by the customer.

The technical specifications for AUDVS are delineated in Technical Publications TR-INS-000342, TR-NPL-000337 and TR-TSV-000338, Issue No. 2.

At the option of the customer, AUDVS may be provided under a Service Discount Plan as set forth in 7.4.10 following.

(2) Optional Features and Functions

(a) Video Bridging (USOC BCNVD)

Video bridging enables AUDVS to be provided in a multipoint service configuration. With Video Bridging, the same video signal that is transmitted from one customer designated premises is received by all other customer designated premises included in the multipoint arrangement. Bridging of AUDVS channels will be performed at Telephone Company Hubs. For the purpose of Video Bridging, all Telephone Company serving wire centers have been designated as Telephone Company Hubs.

7. Special Access Service (Cont'd)

7.2 Service Descriptions (Cont'd)

7.2.14 Advanced Video Services (Cont'd)

(A) Advanced Uncompressed Digital Video Service (Cont'd)

(3) Channel Interfaces

The following channel interfaces (CIs) define the manner of provision and number of audio signal(s) associated with a AUDVS channel:

CI	Description
4TV6-0	Video signal only (no audio)
4TV6-20	Video and one 20 kHz audio signal
4TV6-17	Video and one composite BTSC stereo audio signal
6TV6-20	Video and two 20 kHz audio signals
10TV6-20	Video and four 20 kHz audio signals

Compatible channel interfaces are set forth in 7.3.5(N) following.

ACCESS SERVICE

7. Special Access Service (Cont'd)

7.2 Service Descriptions (Cont'd)

7.2.14 Advanced Video Services (Cont'd)

(B) Advanced Broadcast Video Service*

(1) Channel Description

Advanced Broadcast Video Service (ABVS) is a digital channel with one-way or two-way transmission capability, at a rate of 44.736 Mbps for a standard 525 line/60 field monochrome, or National Television Systems Committee (NTSC) color, video signal of broadcast quality and up to four associated 15 kHz audio signals. The audio signals are provided as one, up to four, separate channels as specified by the channel interface selected by the customer.

* ABVS is no longer available for new installations. Customers who are subscribing to, or have on order, ABVS as of August 29, 2001 may continue with the service until such time as service is disconnected, requires a change in the technical characteristics of the service, or requires maintenance which the Telephone Company is unable to repair.

7. Special Access Service (Cont'd)

7.2 Service Descriptions (Cont'd)

7.2.14 Advanced Video Services (Cont'd)

(B) Advanced Broadcast Video Service* (Cont'd)

(1) Channel Description (Cont'd)

ABVS channels are provided on a full-time or part-time basis between customer designated premises or between a customer designated premises and a Telephone Company Hub where compatible ABVS channels may be connected together into a Hubbing Arrangement. The hubbing arrangement may not include services other than ABVS.

The technical specifications for ABVS channels are delineated in Technical Publications NTR-74415, Issue No. 1, TR-INS-000342, TR-NPL-000337 and TR-TSV-000338, Issue No. 2.

ABVS will be provided with baseband interfaces or a combination of baseband and digital interfaces. Each ABVS channel must include at least one baseband interface as specified by the channel interface selected by the customer. The channel interface also specifies the receipt, or hand-off, of the video and associated audio signal(s) at the customer designated premises.

* Service availability is limited. See footnote on Page 7-108 for more details.

ACCESS SERVICE

7. Special Access Service (Cont'd)

7.2 Service Descriptions (Cont'd)

7.2.14 Advanced Video Services (Cont'd)

(B) Advanced Broadcast Video Service* (Cont'd)

(1) Channel Description (Cont'd)

The customer may request that compatible Full-time and/or Part-time ABVS channels be connected together at a Telephone Company Hub. The Telephone Company will establish the following service configurations involving ABVS channels.

Full-time to Full-time

Full-time to Part-time

Part-time to Part-time

The charge for each service connected shall be the charge specified for Other Labor as set forth in Section 13.2.5 following.

(2) Reserved for Future Use

* Service availability is limited. See footnote on Page 7-108 for more details.

7. Special Access Service (Cont'd)

7.2 Service Descriptions (Cont'd)

7.2.14 Advanced Video Services (Cont'd)

(B) Advanced Broadcast Video Service* (Cont'd)

(3) Channel Interfaces

The following channel interfaces (CIs) define the manner of provision and number of audio signal(s) associated with an ABVS channel:

CI	Description
04TV6.15	Video and one 15kHz audio signal
04TV6.15A	Video and one 15kHz audio signal
04DS6.44A	Digitized Video and one 15kHz audio signal
06TV6.15	Video and two 15 kHz audio signals
06TV6.15A	Video and two 15 kHz audio signals
06DS6.44A	Digitized Video and two 15kHz audio signals
08TV6.15A	Video and three 15 kHz audio signals
08DS6.44A	Digitized Video and three 15kHz audio signals
10TV6.15A	Video and four 15 kHz audio signals
10DS6.44A	Digitized Video and four 15kHz audio signals

Compatible channel interfaces are set forth in 7.3.5(N) following.

* Service availability is limited. See footnote on Page 7-108 for more details.

7. Special Access Service (Cont'd)

7.2 Service Descriptions (Cont'd)

7.2.14 Advanced Video Services (Cont'd)

(C) Serial Component Video Service

(1) Channel Description

Serial Component Video Service (SCVS or D1 Service) is a broadband, digital video transport channel with one-way transmission capability of 270 Mbps high quality video as defined in American National Standard Institute/The Society of Motion Picture and Television Engineers (ANSI/SMPTE) Standard 259M. This standard describes a serial digital interface for System M, 525 line/60 field National Television Systems Committee (NTSC) digital television equipment operating with 4:2:2 serial component signals that conform to ANSI/SMPTE 259M-1997 serial digital format. The service may include up to four 20 kHz Audio Engineering Society (AES)/European Broadcasting Union (EBU) digital audio signals.

SCVS channels are provided on a full-time or part-time basis over digital network facilities between the customer designated premises involved. Where suitable facilities are not available to provide SCVS, Special Construction charges as set forth in Section 5.1.3 preceding may apply. At the customer designated premises, the Telephone Company will install coaxial cable for the transmission facilities within the building up to the channel interface. The channel interface enables delivery of digital audio signals which are embedded in the digital transmission stream. The customer is responsible for embedding the audio and ancillary date in the digital transmission. The quality of the video signal may be impaired if the distance of the coaxial cable results in transmission parameters which are not within the limits specified in the technical publication set forth in (2) following.

7. Special Access Service (Cont'd)

7.2 Service Descriptions (Cont'd)

7.2.14 Advanced Video Services (Cont'd)

(C) Serial Component Video Service

(2) Optional Features and Functions

(a) Advanced Video Switching

Advanced Video Switching is available with certain Video Services and Advanced Video Services in order to switch compatible video channels provided in premises to hub (TVOC) service configurations. Switching of Broadcast Video Service (BVS) is described in 7.2.5(D)(6) preceding. This service is provided with an analog interface at the customer's designated premises. Switching of Advanced Video Services (Serial Component Video Service (SCVS) and 45 Mbps Digital Video Transport Service (45 DVTS)) is described below. Advanced Video Services are transmitted digitally to the customer's designated premises. With this option, compatible video and/or advanced video services may be switched to create new end-to-end channels. A matrix in the video switch defines the mapping of services to specific input/output ports. Switching matrixes can be established in 32 X 32, 64 X 64, 96 X 64, 96 X 96, 128 X 96 and 128 X 128 input/output port configurations.

When ordering Advanced Video Switching, the Telephone Company will dedicate an entire video switching arrangement to the customer. Switching of Advanced Video Service is provided at designated Telephone Company Video Operation Centers (TVOCs) as specified in NATIONAL EXCHANGE CARRIER ASSOCIATION INC., TARIFF F.C.C. No. 4.

7. Special Access Service (Cont'd)

7.2 Service Descriptions (Cont'd)

7.2.14 Advanced Video Services (Cont'd)

(C) Serial Component Video Service

(2) Optional Features and Functions (Cont'd)

(a) Advanced Video Switching (Cont'd)

The following services (or combination of services) require a minimum switch capacity of 32 inputs and 32 outputs (32 X 32). Larger capacity switches are also available in configurations up to 128 X 128. At no time may the customer exceed the capacity of the video switch dedicated for the customer's exclusive use.

- All BVS
- All 45Mbps DVTS
- All SCVS
- Combination of BVS and/or 45 Mbps DVTS

The following combination of services require a minimum switch capacity of 64 inputs and 64 outputs (64 X 64). Larger capacity switches are also available in configurations up to 128 X 128. At no time may the customer exceed the capacity of the video switch dedicated for the customer's exclusive use.

- Combination of BVS and SCVS
- Combination of 45 Mbps DVTS and SCVS

When more than one type of video or advanced video service is supported on the video switch, connection of different service types is prohibited (e.g., a BVS channel may not be connected to a 45 Mbps DVTS channel).

Video switching is available with full-time and part-time video services. Compatible video services may be switched in full-time to full-time, full-time to part-time or part-time to part-time service configurations.

7. Special Access Service (Cont'd)

7.2 Service Descriptions (Cont'd)

7.2.14 Advanced Video Services (Cont'd)

(C) Serial Component Video Service

(2) Optional Features and Functions (Cont'd)

(a) Advanced Video Switching (Cont'd)

The customer also has the option of requesting that the Telephone Company establish a video patch to connect compatible channels provided from different video switches. Video Patch Arrangements are set forth in (b) following.

Switching of video channels is limited to same service connections only (e.g., a 45 Mbps DVTS channel can only be connected to another 45 Mbps DVTS channel).

The rates and charges for the Advanced Video Switching option apply as a Premises to Hub Channel Termination for each connection to the TVOC. The rates are differentiated by the type of service involved. The Premises to Hub Channel Termination provides for the communications path between a customer designated premises and the dedicated switching arrangement at the TVOC where switching/patching is performed. This optional channel termination which is necessary for video switching applies in lieu of the basic channel termination. When the wire center serving the customer's designated premises and the TVOC are not located in the same wire center, channel mileage applies between the two wire centers involved.

The customer must perform all switching of the video channels connected to the dedicated switching arrangement. A separate dial up line or special access service channel is required to connect the customer's designated premises to the dedicated switching arrangement located in the TVOC. One or more customers may utilize the same dedicated switching arrangement, however, one of the participating customers will be designated as the customer of record for management and control of all switching through that video switch. The customer of record will also be the responsible bill party for the dedicated switching arrangement.

7. Special Access Service (Cont'd)

7.2 Service Descriptions (Cont'd)

7.2.14 Advanced Video Services (Cont'd)

(C) Serial Component Video Service

(2) Optional Features and Functions (Cont'd)

(a) Advanced Video Switching (Cont'd)

In addition to the Premises to Hub Channel Terminations, a recurring monthly rate and nonrecurring charge applies for the switch capacity of the dedicated switching arrangement. The dedicated switching arrangement is provided for a term of either 60 months or 120 months as selected by the customer. Early Termination Charges apply if the dedicated switching arrangement is disconnected prior to the end of the commitment period, except as follows:

- The customer may, at any time prior to the expiration of a 60 month term plan, cancel its 60 month plan and establish a 120 month plan without the application of Early Termination Charges on the cancelled plan. Time-in-service credit on the cancelled plan will be granted and applied towards the new extended plan.

  The rate for the longer commitment period will apply effective with the first bill day following extension of the commitment period and continue through the remainder of the commitment period associated with the extended plan. No adjustment for the increased discount associated with the extended plan will be made to the monthly rates already billed on the cancelled plan.

  The customer may, at any time prior to the end of the commitment period, upgrade to a larger switching matrix (e.g., from a 32 X 32 matrix to a 64 X 64 matrix) without the application of Early Termination Charges on the cancelled plan. However, the upgrade is subject to all applicable nonrecurring charges, and a new commitment period.

7. Special Access Service (Cont'd)

7.2 Service Descriptions (Cont'd)

7.2.14 Advanced Video Services (Cont'd)

(C) Serial Component Video Service

(2) Optional Features and Functions (Cont'd)

(a) Advanced Video Switching (Cont'd)

Termination liability will apply when the conditions above are not met and the customer service for the dedicated switching arrangement prior to expiration of the plan period. The Early Termination Charge for a 60-month plan is equal to 100 percent of the monthly charge for the unexpired portion of the first year and 15 percent of the monthly charge for the remainder of the plan. The Early Termination Charge for a 120-month plan is equal to 100 percent of the monthly charge for the unexpired portion of the first year and 10 percent of the monthly charge for the remainder of the plan.

Upon expiration of the term plan, the plan for the dedicated switching arrangement will automatically be renewed for the same term at the currently effective rate, or the customer may subscribe to a new plan. To terminate service without incurring termination liabilities on the renewed plan, the customer must disconnect service within 90 days of the expiration date.

Video services connected to the switch may be provided at daily rates, month-to-month rates or under any Service Discount or Term Plan applicable to the service(s) involved.

(b) Video Patching Arrangement

The Video Patching Arrangement provides for the Telephone Company patching of video services connected to different video switches which are located in the same TVOC. Patching will only be performed on services arranged in premises to hub service configurations. Daily and Monthly rates and charges apply for each Video Patch Arrangement.

(3) Technical Specifications

The technical specifications for SCVS are delineated in Technical Publications ANSI/SMPTE 259M - 1997.

The Telephone Company will only accept a 75-ohm impedance interface to/from customer-provided, high quality coaxial cable that meets Telephone Company transmission requirements.

7. Special Access Service (Cont'd)

7.2 Service Descriptions (Cont'd)

7.2.14 Advanced Video Services (Cont'd)

(C) Serial Component Video Service (Cont'd)

(4) Channel Interfaces

The following channel interface (CI) defines the provision and number of audio signal(s) associated with SCVS.

CI	Description
02TD6.E	Uncompressed serial component digital video transport with ancillary channels through the serial digital interface

Compatible channel interfaces are set forth in 7.3.5(N) following.

ACCESS SERVICE

7. Special Access Service (Cont'd)

7.2 Service Descriptions (Cont'd)

7.2.14 Advanced Video Services (Cont'd)

(C) Serial Component Video Service (Cont'd)

(4) Rate Regulations

A channel termination rate applies for each termination of SCVS on a Transmit only or Receive only basis. The channel termination rate is also differentiated as being a basic channel termination or a premises to hub channel termination. Included as part of the channel termination is the use of up to twenty-five (25) feet of coaxial cable from the point at which the video service enters the customer's building to the channel interface. In the event that the customer requests that the Telephone Company extend the location of the channel interface beyond 25 feet, and the Telephone Company agrees to extend the communications path, the charges set forth for Other Labor in Section 13.2.5 following will apply for the extended portion of the communications path. The extended communications path is subject to distance limitations which are specific to the communications path being extended.

The Channel Mileage rate element applies on a fixed and per mile basis for the transmission facilities between the serving wire centers of the premises involved and is subject to the mileage bands specified in Section 30.7.16 following for price band rates and 31.7.16 following for all other rates.

SCVS is subject to the Access Order regulations set forth in Section 5. preceding.

The minimum period for full-time SCVS is one year, subject to the regulations set forth in Section 5.2.5 preceding.

7. Special Access Service (Cont'd)

7.2 Service Descriptions (Cont'd)

7.2.14 Advanced Video Services (Cont'd)

(D) High-Definition (Hi-Def) Digital Video Transport

(1) Channel Description

High-Definition (Hi-Def) Digital Video Transport Service (Hi-Def DVTS) is a broadband, digital video transport channel with one-way transmission capability of high quality video at a rate of 19.39 Mbps as defined in American National Standard Institute/The Society of Motion Picture and Television Engineers (ANSI/SMPTE) Standard 310M or at a rate of 1.485 Gbps uncompressed high quality video as defined in ANSI/SMPTE Standard 292M. These standards describe a serial digital interface for equipment conforming to the SMPTE and Advanced Television Systems Committee (ATSC) Mbps digital television standards. Hi-Def DVTS automatically detects the customer input as 19.39 Mbps or 1.485 Gbps and provides the compatible transport of the signal to the corresponding receive channel termination in accordance with SMPTE standards. Hi-Def DVTS is provided with an electrical interface.

Hi-Def DVTS is provided over digital network facilities between the customer designated premises involved. Where suitable facilities are not available to provide Hi-Def DVTS, Special Construction charges as set forth in Section 5.1.3 preceding may apply. At the customer designated premises, the Telephone Company will install coaxial cable for the transmission facilities within the building up to the channel interface. The channel interface enables delivery of digital audio signals which are embedded in the digital transmission stream. The quality of the video signal may be impaired if the distance of the coaxial cable results in transmission parameters which are not within the limits specified in the technical publications for Hi-Def DVTS.

(2) Technical Specifications

The technical specifications for Hi-Def DVTS are delineated in Technical Publications ATSC Standard A-53 Digital Television Standard, ATSC Document A-54 Guide to the Use of ATSC Television Standard and ANSI/SMPTE Standard 310M Television Synchronous Serial Interface for MPEG-2 Digital Transport Streams (19.39 Mbps) and SMPTE 292M-1998 (1.485 Gbps).

The Telephone Company will only accept a 75-ohm impedance interface to/from customer-provided, high quality coaxial cable that meets Telephone Company transmission requirements.

7. Special Access Service (Cont'd)

7.2 Service Descriptions (Cont'd)

7.2.14 Advanced Video Services (Cont'd)

(D) High-Definition (Hi-Def) Digital Video Transport (Cont'd)

(3) Channel Interfaces

The following channel interface (CI) is available with Hi-Def DVTS.

02TB6

Compatible channel interfaces are set forth in 7.3.5(N) following.

(4) Terms and Conditions

Hi-Def DVTS is available on a month to month basis or under a 1 year, 3 year or 5 year term plan as selected by the customer.

At any time prior to the expiration of a selected term plan, the customer may change to a longer term plan by canceling the existing plan and establishing a new, longer term plan. Early Termination Charges as set forth in 7.4.1(D) will not apply to the cancelled plan.

Upon expiration of a term plan, the customer's Hi-Def DVTS will automatically be renewed for the same term at the currently effective rate, or the customer may subscribe to a new plan. To terminate service without incurring new termination liabilities, the customer must disconnect service within 90 days of the expiration date.

7. Special Access Service (Cont'd)

7.2 Service Descriptions (Cont'd)

7.2.14 Advanced Video Services (Cont'd)

(D) High-Definition (Hi-Def) Digital Video Transport (Cont'd)

(5) Rate Regulations

The rates and charges for Hi-Def DVTS include channel termination and channel mileage rate elements.

A channel termination rate applies for each termination of Hi-Def DVTS on a Transmit only or Receive only basis. Included as part of the channel termination is the use of up to twenty-five (25) feet of coaxial cable from the point at which the video service enters the customer's building to the channel interface. In the event that the customer requests that the Telephone Company extend the location of the channel interface beyond 25 feet, and the Telephone Company agrees to extend the communications path, the charges set forth for Other Labor in Section 13.2.5 following will apply for the extended portion of the communications path. The extended communications path is subject to distance limitations which are specific to the communications path being extended.

The Channel Mileage rate element applies on a fixed and per mile basis for the transmission facilities between the serving wire centers of the premises involved when the mileage is over zero.

Hi-Def DVTS is subject to the Access Order regulations set forth in Section 5. preceding.

7. Special Access Service (Cont'd)

7.2 Service Descriptions (Cont'd)

7.2.14 Advanced Video Services (Cont'd)

(D) 45 Mbps Digital Video Transport Service

(1) Channel Description

45 Mbps Digital Video Transport Service (45 Mbps DVTS) is a broadband, digital video transport channel with one-way transmission capability of 45 Mbps high quality video as defined in American National Standard Institute (ANSI) T1.102-1993 (R1999), ANSI T1.102.01-1996, ANSI T1.107-1995 and in Telcordia Documents SR 4274 and GR 338. These standards describe a digital interface for equipment conforming to the ANSI and Telcordia digital television standards. 45 Mbps DVTS is provided with an electrical interface with an optional video encoder and decoder (codec) at either or both ends for full time service. The service may include up to six 5Hz – 22 kHz Audio Engineering Society (AES)/European Broadcasting Union (EBU) digital audio signals.

45 Mbps DVTS channels are provided on a full-time or part-time basis over digital network facilities between the customer designated premises involved or between a customer designated premises and a TVOC where compatible channels may be switched. Where suitable facilities are not available to provide 45 Mbps DVTS, Special Construction charges as set forth in Section 5.1.3 preceding may apply. At the customer designated premises, the Telephone Company will install coaxial cable for the transmission facilities within the building up to the channel interface. The channel interface enables delivery of digital audio signals which are embedded in the digital transmission stream. The quality of the video signal may be impaired if the distance of the coaxial cable results in transmission parameters which are not within the limits specified in the technical publications for 45 Mbps DVTS.

(2) Optional Features and Functions

(a) Video Encoder and Decoder (CODEC) (USOC MSQHA)

A codec may be provided at either or both ends of 45 Mbps DVTS service provided on a monthly (full-time) basis. The minimum period for the CODEC optional feature is one year. A codec enables compression of the NTSC composite video signal into a 44.736 Mbps data stream or decompression of the 44.736 Mbps data stream into NTSC composite video and audio signals. A codec is not available with 45 Mbps DVTS provided on a part-time basis.

(b) Advanced Video Switching

45 Mbps DVTS may be provided with the Advanced Video Switching option, subject to the same terms and conditions described for SCVS in (C)(2)(a) preceding.

7. Special Access Service (Cont'd)

7.2 Service Descriptions (Cont'd)

7.2.14 Advanced Video Services (Cont'd)

(E) 45 Mbps Digital Video Transport Service (Cont'd)

(3) Technical Specifications

The technical specifications for 45 Mbps DVTS are delineated in Technical Publications American National Standard Institute (ANSI) TI.102-1993 (R1999), ANSI TI.102.01-1996, ANSI TI.107-1995 and in Telcordia Documents SR 4274 A View of Systems M-NTSC Video Jitter and Wander Specifications on Compressed Systems at 45 MBS, and GR 338 Television Special Access and Local Channel Services – Transmission Parameter Limits and Interface Combinations.

The Telephone Company will only accept a 75-ohm impedance interface to/from customer-provided, high quality coaxial cable that meets Telephone Company transmission requirements.

(4) Channel Interfaces

The following channel interfaces (CI) are available with 45 Mbps DVTS.

04TE6.20D
10TE6.20D
10TV6.20D

Compatible channel interfaces are set forth in 7.3.5(N) following.

(5) Terms and Conditions

45 Mbps DVTS is available on a month to month basis or under a 1 year, 3 year or 5 year term plan as selected by the customer.

At any time prior to the expiration of a selected term plan, the customer may change to a longer term plan by canceling the existing plan and establishing a new, longer term plan. Early Termination Charges as set forth in 7.4.1(D) will not apply to the cancelled plan.

7. Special Access Service (Cont'd)

7.2 Service Descriptions (Cont'd)

7.2.14 Advanced Video Services (Cont'd)

(D) 45 Mbps Digital Video Transport Service (Cont'd)

(5) Terms and Conditions (Cont'd)

Upon expiration of a term plan, the customer's 45 Mbps DVTS will automatically be renewed for the same term at the currently effective rate, or the customer may subscribe to a new plan. To terminate service without incurring new termination liabilities, the customer must disconnect service within 90 days of the expiration date.

(6) Rate Regulations

The rates and charges for 45 Mbps DVTS include channel termination, channel mileage and when applicable, optional feature monthly rate elements.

A channel termination rate applies for each termination of 45 Mbps DVTS on a Transmit only or Receive only basis. Included as part of the channel termination is the use of up to twenty-five (25) feet of coaxial cable from the point at which the video service enters the customer's building to the channel interface. In the event that the customer requests that the Telephone Company extend the location of the channel interface beyond 25 feet, and the Telephone Company agrees to extend the communications path, the charges set forth for Other Labor in Section 13.2.5 following will apply for the extended portion of the communications path. The extended communications path is subject to distance limitations which are specific to the communications path being extended.

The Channel Mileage rate element applies on a fixed and per mile basis for the transmission facilities between the serving wire centers of the premises involved when the mileage is over zero.

The Advanced Video Switching option rates for 45 Mbps DVTS apply in the same manner as they apply for SCVS as described in (C)(2)(a) preceding.

The CODEC rate element applies monthly for each codec provided on a 45 Mbps DVTS channel.

45 Mbps DTVS is subject to the Access Order regulations set forth in Section 5. preceding.

7. Special Access Service (Cont'd)

7.2 Service Descriptions (Cont'd)

7.2.15 Channel Extension Service#

(A) General

The Telephone Company will provide monitoring of the ESCON® signal to the parameters specified in the technical specifications for the service.

Channel Extension Service provides dedicated point-to-point broadband data transmission between mainframe computers, between mainframes and peripheral devices and/or between Local Area Networks (LANs) using either a repeater backbone or a dense wave division multiplexing (DWDM) backbone architecture.

Channel Extension Service is provided over two fiber optic strands connecting the network interfaces at the customer designated premises. The repeater backbone architecture provides one ESCON® (Enterprise Systems CONnection protocol is an IBM registered trademark) channel over each fiber pair. The DWDM backbone architecture can provide up to fourteen channels over each fiber pair. For path redundancy, DWDM requires a second pair of fiber optic strands and a switch protection module in the equipment.

Effective October 5, 2007, orders for new Channel Extension Service are no longer permitted. The Telephone Company will continue to provide Channel Extension Service pursuant to this Section 7.2.15 on any existing Channel Extension Service that is in-service as of October 5, 2007, or any order for Channel Extension Service that is placed with the Telephone Company prior to October 5, 2007 (collectively, Existing CES), subject to the following condition:

The Telephone Company will continue to provide Existing CES to a term plan customer for the remainder of the customer's current commitment period plus an additional six (6) months beyond the expiration date of such commitment period at the existing rates of the current term plan, or until the customer replaces the Existing CES with a comparable Telephone Company provided service, or until the customer discontinues service, whichever occurs first. During the remainder of the current commitment period, and subject to the availability of facilities and equipment, orders involving additions and/or changes to Existing CES are permitted provided that they do not require a new commitment period. Orders involving additions and/or changes to Existing CES are not permitted during the additional six (6) month period.

7. Special Access Service (Cont'd)

7.2 Service Descriptions (Cont'd)

7.2.15 Channel Extension Service# (Cont'd)

(B) Service Availability

Channel Extension Service is available between a customer's two premises where suitable single mode fiber optic facilities exist to provide such service. Where suitable facilities do not exist to provide the service, the Telephone Company may require that facilities be specially constructed subject to the provisions set forth in Sections 2.1.4, Provision of Services, and 5.1.3, Special Construction, preceding.

Channel Extension Service is supported by the Telephone Company's Single Point of Contact (SPOC) center which provides continuous maintenance, trouble resolution and network monitoring twenty-four hours per day, seven days per week (24x7). Service order processing and network installation functions are performed during normal business hours only.

The customer is responsible for purchasing the appropriate circuits and associated equipment required to provide the Telephone Company with out-of-band monitoring of the network devices. These circuits will connect the equipment located at the customer's premises to a control center location.

Network maintenance and network upgrades for Channel Extension Service are performed between 11:00pm and 8:00am. At times, during the hours of maintenance activity, it will be necessary to place a customer's service in an inactive (out of service) condition. The amount of time that this scheduled out of service condition exists is called a "maintenance window". The Telephone Company will provide notice to the customer prior to the maintenance window. Down time during a maintained window does not qualify for credit allowance as a service outage.

(C) Technical Specifications

The technical specifications for Channel Extension Service using the repeater backbone architecture are delineated in Technical References Enterprise System Architecture (ESA)/390 ESCON® I/0 Interface Physical Layer SA23-0394-00, Enterprise Systems Architecture/390 ESCON® I/0 Interface SA22-7202-02, GA23-0383 and ANSI X3.271 Fibre Channel Single-byte Command Code Sets Connection Architecture (SBCON).

Service availability limited. Refer to # footnote on Page 7-126.

7. Special Access Service (Cont'd)

7.2 Service Descriptions (Cont'd)

7.2.15 Channel Extension Service# (Cont'd)

(D) Channel Interfaces

The compatible network channel interface code for Channel Extension Service using the repeater architecture is 02FCF.20, and using the DWDM backbone architecture is 02FCF.125.

(E) Network Interfaces

The repeater backbone architecture can support an ESCON® or External Time Reference (ETR) interface with a bandwidth of 200 Mbps. The DWDM backbone architecture can support a bandwidth of up to 1.25 Gbps.

(1) ESCON®/External Time Reference, a 200 Mbps interface, is used for high speed, point-to-point transport service to connect host channels and control units. The ETR centralized time reference unit maintains time of day synchronization. This interface can be used on both the repeater and the DWDM backbone architectures.

The Telephone Company cannot guarantee the successful performance of this service on the repeater backbone architecture when the distance between premises exceeds 20 kilometers or when transmission loss is greater than 14db. In these instances, a repeater is required. The maximum distance from end to end is approximately 43 kilometers, and the maximum number of repeaters per channel is one. The Telephone Company will determine the wire center in which such repeaters will be utilized.

The Telephone Company cannot guarantee the successful performance of this service on the DWDM backbone architecture when the transmission loss between premises is greater than 17db with Path Protection and 23db without Path Protection. The DWDM architecture does not have regeneration capabilities. The customer's interface will be 13nm.

Service availability limited. Refer to # footnote on Page 7-126.

7. Special Access Service (Cont'd)

7.2 Service Descriptions (Cont'd)

7.2.15 Channel Extension Service# (Cont'd)

(F) Rate Regulations

(1) The rates and charges for Channel Extension Service include channel termination, channel mileage, and where applicable, repeater or redundant path switching rate elements which apply in accordance with the rate regulations set forth in Section 7.4.9(C) following. Channel Extension Service is provided under a 3 year term plan or a 5 year term plan as selected by the customer. The rates and charges for Channel Extension Service are shown as a 3 year rate or a 5 year rate which applies each month during the term selected by the customer.

(2) At any time prior to the expiration of the selected term plan, the customer may change its 3 year term plan to a 5 year term plan by canceling the 3 year term plan and establishing a new 5 year term plan. Early Termination Charges as set forth in 7.4.1(D) following will not apply to the cancelled 3 year term plan.

(3) At the expiration of the term plan, the customer's Channel Extension Service will automatically be renewed at the currently effective 3 year or 5 year rate, as applicable, or the customer may subscribe to a new term plan.

(4) The minimum period for Channel Extension Service is 3 years.

Service availability limited. Refer to # footnote on Page 7-126.

7. Special Access Service (Cont'd)

7.2 Service Descriptions (Cont'd)

7.2.16 Facilities Management Service

(A) General

Facilities Management Service (FMS) is a service option that provides for Telephone Company management of engineering and design of a customer's Special Access Service network from the customer's designated primary premises location(s) to serving wire centers of secondary locations within the same LATA. Connection to the secondary location may be direct or through a Telephone Company location where multiplexing to a higher capacity service of a non-FMS customer occurs. With FMS, the Telephone Company assumes responsibility for the routing of the customer's dedicated circuits over the Telephone Company's Special Access Service network in order to maximize network efficiencies and to optimize economic efficiencies.

(B) Definitions

The following definitions are specific to FMS and are in addition to the definitions set forth in Section 2.6 preceding.

DSO Equivalency
The term "DS0 Equivalency" denotes a measure of DSO channels which are the basic building block for high capacity digital services. The DSO equivalency for the service levels provided with FMS are as follows.

Service Level	DSO Equivalency
OC12	8,064
OC3	2,016
DS3 High Capacity or STS1	672
DS1 High Capacity	24
DIGIROUTE℠ digital service II	1
Voice Grade Service	1

FMS Entrance Facility

The term "FMS Entrance Facility" denotes the transmission facilities between a customer's network interface at its designated primary premises and the associated serving wire center.

7. Special Access Service (Cont'd)

7.2 Service Descriptions (Cont'd)

7.2.16 Facilities Management Service (Cont'd)

(B) Definitions (Cont'd)

Network Interface
The term "Network Interface" denotes the interface point at a customer's designated primary premises where connection is made between the FMS network and the customer's network. FMS network interfaces include electrical DS1, DS3 and STS1 or optical IEF OC3 and OC12 interfaces.

Primary Premises
The term "Primary Premises" denotes a location (i.e., customer designated premises or Expanded Interconnection multiplexing node) designated by the customer where an FMS circuit/channel is either originated or terminated. Only one end of the circuit can be designated a primary premises. Such primary premises must meet the criteria for one of the following two types as follows.

Type 1: A location with an entrance facility of a minimum of 672 Switched and/or Special Access in-service DSO equivalent channel terminations and a DS3, STS1, OC3 or OC12 network interface(s), or an Expanded Interconnection multiplexing node with service cross-connected at the DS3 level and an electrical DS3 network interface.

Type 2: A location with an FMS Entrance Facility of a minimum of 144 Special and/or Switched Access in-service DSO equivalent channel terminations provided over DS1 network interface(s), or an Expanded Interconnection multiplexing node with service cross-connected at the DS1 level and a DS1 interface.

Secondary Premises
The term "Secondary Premises" denotes a customer designated premises other than the primary premises. Secondary premises are not included as part of FMS. Connection to the secondary premises may be direct or through a Telephone Company location where service is multiplexed on to a facility of a non-FMS customer. When the secondary premises of the non-FMS customer utilizes DSR as set forth in Section 34.1 following, the associated port on the DSR node will be billed to the FMS customer. The port on the DSR node allows for lower capacity service to be added to, or dropped from, the high capacity dedicated ring.

7. Special Access Service (Cont'd)

7.2 Service Descriptions (Cont'd)

7.2.16 Facilities Management Service (Cont'd)

(C) Service Description

With FMS, Voice Grade, DDS, DIGIROUTE℠ digital service II and High Capacity Special Access Services are provided to the customer over discrete channels. The Telephone Company will engineer the service from the FMS entrance facility at the customer's designated primary premises to the wire center associated with secondary premises over its own Special Access network. The wire center associated with the secondary premises may be the wire center serving the secondary premises, the wire center where the Special Access Service will be added to the IDSR node or DSR node of a non-FMS customer, or a Telephone Company Hub where service is multiplexed on to a higher capacity facility of a non-FMS customer. The channel routing to the serving wire center, IDSR node, DSR node, or Hub, as applicable, may not be designated by the customer as it is for most Telephone Company regular Special Access High Capacity Services.

FMS provides the customer with an alternative to the customer's self-management of its network of standard Special Access Service channels.

FMS is available in all of the Telephone Company's operating territories and is provided on a LATA-wide basis. FMS IEF is available where IEF facilities permit as described in Section 26.1.4(G) following.

Facilities Management Service is provided on a month-to-month basis or, at the option of the customer, under a three year term plan or a five year term plan. The minimum period for FMS when provided on a month-to-month basis is one year.

The minimum billing for individual channels within the FMS network is one month.

7. Special Access Service (Cont'd)

7.2 Service Descriptions (Cont'd)

7.2.16 Facilities Management Service (Cont'd)

(D) Minimum Service Requirements (Cont'd)

The customer must have at least one premises within a LATA which is designated as its primary premises for FMS as defined in (B) preceding.

All services terminated at the customer's designated primary premises and the associated Voice Grade, DDS, DIGIROUTE℠ digital service II or High Capacity Special Access Services must be included in the FMS plan for that LATA. However, a single plan may not include a mix of Type I and Type 2 primary premises as defined in (B) preceding.

The minimum requirements for Type 1 or Type 2 Primary Premises are as set forth in (B) preceding

ACCESS SERVICE

7. Special Access Service (Cont'd)

7.2 Service Descriptions (Cont'd)

7.2.16 Facilities Management Service (Cont'd)

(E) Terms and Conditions

(1) In its initial order for FMS, the customer will designate the LATA, type of primary premises and whether FMS will be provided on a month-to-month basis or under a term plan as selected by the customer.

(2) Only one FMS plan is allowed per LATA. The plan may be provided on a month-to-month basis or under a single term commitment as selected by the customer, but not both.

(3) When FMS is provided under a term plan of 3 or 5 years the customer must maintain an annual minimum of ninety percent (90%) of the initial commitment of DSO equivalent services for the preceding twelve months. The Telephone Company will conduct a true-up which compares the average number of DSO equivalents actually in service over the preceding twelve months to the annual minimum of ninety percent (90%) of the initial commitment.

(4) In the event that the annual average number of DSO equivalent services falls below 90% of the commitment level for the plan, the customer has the following options.

(a) Buy down the commitment level by paying termination liability on the shortfall between the commitment level and the annual average for the preceding 12 months. Termination liability is as set forth in (G)(3) following. The new commitment level may not be less than the minimum service requirements for FMS as described for Type 1 or Type 2 Primary Premises in (B) preceding; or

7. Special Access Service (Cont'd)

7.2 Service Descriptions (Cont'd)

7.2.16 Facilities Management Service (Cont'd)

(E) Terms and Conditions (Cont'd)

(4) (Cont'd)

(b) Retain the original commitment level and pay 12 months of charges for the DSO equivalent shortfall using the customer's average DSO rate based on the previous 12 months billing. The Telephone Company will calculate the shortfall charges as follows.

(Step 1) The Telephone Company will calculate the average number of DSO equivalent channel terminations which were in-service over the preceding twelve months by summing the actual number of DSO equivalent channel terminations for each of the last twelve months and dividing by twelve. The resulting number represents the average DSO equivalent channel terminations per month.

(Step 2) The Telephone Company will calculate the average DSO rate for an equivalent DSO by first summing the total monthly charges associated with each DSO which was in-service over the preceding twelve months and dividing by twelve. The resulting amount is then divided by the average monthly DSO equivalent channel terminations determined in Step 1.

(Step 3) The Telephone Company will determine the shortfall by subtracting the average number of DSO equivalent channel terminations determined in Step 1 from the number of DSO equivalent channel terminations in the original commitment level, and multiplying the difference by the average rate per DSO equivalent determined in Step 2. The resulting amount is the shortfall charge due from the customer. Such charge is not subject to any late payment factor as specified in Section 2.4.1 preceding.

(c) Apply Time In-Service Credits (TISCs) as set forth in (G)(1) following to offset the shortfall.

7. Special Access Service (Cont'd)

7.2 Service Descriptions (Cont'd)

7.2.16 Facilities Management Service (Cont'd)

(E) Terms and Conditions (Cont'd)

(5) If the FMS term plans in multiple LATAs share a common expiration date and the same type of primary premises, the associated commitment levels will be aggregated into a single total. Fulfillment of the commitment level will be determined as stated in (E)(3) preceding; however, the calculation will be on the aggregate level for all eligible LATAs.

(6) The customer will provide either DS1 or electrical DS3 network interfaces at each primary premises.

(7) The FMS customer, when ordering Voice Grade Service, DDS, DIGIROUTE℠ digital service II or High Capacity Service, must specify the type of service and the locations involved, one of which must be a primary premises.

(8) Reserved for future use.

(9) The Telephone Company will provide the same service intervals and quality standards for services in an FMS plan as are provided for non-FMS Special Access Services.

(10) Where Switched Access FMS is not available, when both Switched Access Service and Special Access Service terminate at the same primary premises, the Telephone Company will apply a Switched Access Service offset in the determination of the applicable rate band of FMS Channel Termination charges. This offset will be calculated by including up to seventy-five percent (75%) of the Feature Group B and D trunks in the DSO equivalency total with each trunk being counted as a single DSO equivalent. FMS rate bands are as set forth in Section 30.7.18 following for price band rates and 31.7.18 following for all other rates.

7. Special Access Service (Cont'd)

7.2 Service Descriptions (Cont'd)

7.2.16 Facilities Management Service (Cont'd)

(E) Terms and Conditions (Cont'd)

(11) FMS is not applicable to the following Switched Access, Special Access or SONET Services and options:

- DSR as set forth in Section 34.1 following
- IDSR as set forth in Section 26.1.1

- IntelliBeam Broadband Transport (IBT) as set forth in Section 26.1.5, except when associated with an IntelliBeam Entrance Facility
- IntelliBeam Shared Single Path (ISSP) as set forth in Section 26.1.6, except when associated with an IntelliBeam Entrance Facility
- Enterprise SONET Service as set forth in Section 26.1.2
- Services provided under a Service Discount Plan or a Commitment Discount Plan, except as specified in 7.2.16(E)(13) following
- Central Office Multiplexing optional features or BSEs
- Automatic Loop Transfer as set forth in Section 7.2.9(D)(1)
- Transfer Arrangement as set forth in Section 7.2.9(D)(2)
- Premises other than Primary Premises as defined in 7.2.16(B) preceding
- Service provided under a Shared Billing Arrangement as specified in Section 5.2 preceding, except as specified in (12) following.

(12) Except for services connected to secondary premises over a higher capacity facility of a non-FMS customer, services provided under FMS may not be included in Shared Billing Arrangements. Therefore potential FMS customers whose network contains Shared Billing Arrangement must choose one of two options prior to subscribing to an FMS plan.

(a) Shared Billing Arrangement Transition Period

Any service already provided under a Shared Billing Arrangement at the time of subscription to FMS must be converted within the first twelve months of the effective date of establishing FMS.

7. Special Access Service (Cont'd)

7.2 Service Descriptions (Cont'd)

7.2.16 Facilities Management Service (Cont'd)

(E) Terms and Conditions (Cont'd)

(12) (Cont'd)

(a) (Cont'd)

Prior to conversion, such services will not be included in the DSO calculation to determine the customer's FMS Rate Band for billing of Primary Premises channel terminations. However, these services will be billed at the same FMS rates as those applicable to the customer's other services provided under FMS.

The customer must remove the Shared Billing Arrangements prior to the end of the one-year transition period. The Telephone Company will notify the customer sixty (60) days prior to the end of the transition period of any Shared Billing Arrangements that remain on the customer's account. Failure to eliminate such arrangements will result in termination of service with termination liability charges being applied.

(b) Virtual Shared Billing Arrangement Billing Option

At the option of the customer, the Virtual Shared Billing Arrangement Billing Option for Shared Billing Arrangement circuits can be selected. Since FMS pricing is not allowed for Shared Billing Arrangement circuits, this Virtual Shared Billing Arrangement Billing Option can be used to develop separate, virtual facility charges for Shared Billing Arrangement circuits without the customer incurring the expense associated with physically moving these Shared Billing Arrangement circuits onto separate, non-FMS facilities at the point of termination. These virtual charges would represent, as closely as possible, the charges the customer would incur if the Shared Billing Arrangement circuits had been physically moved to separate, non-FMS facilities.

7. Special Access Service (Cont'd)

7.2 Service Descriptions (Cont'd)

7.2.16 Facilities Management Service (Cont'd)

(E) Terms and Conditions (Cont'd)

(12) (Cont'd)

(b) (Cont'd)

If the customer selects this Virtual Shared Billing Arrangement Billing Option, the Telephone Company will first produce an inventory of Shared Billing Arrangement circuits that are terminating at each of the customer's FMS point of termination locations. Once the number of Shared Billing Arrangement circuits at each FMS point of termination location has been determined, the Telephone Company will develop a count of DS3 channel terminations/collocation cross-connects and 3/1 muxes that would be required at each point of termination to serve these Shared Billing Arrangement circuits. The Telephone Company will then price these facilities by using five-year term rates specified in Sections 30.7.18 and 31.7.18 following. The result of this pricing exercise will be a replication of special access facility charges that the customer would incur if a separate network were to be established specifically to serve these Shared Billing Arrangement circuits.

The pricing for these virtual Shared Billing Arrangement facilities developed by using the method described above will be billed monthly for a period of one year. Sixty (60) days prior to the end of this billing period, a new inventory will be conducted that will result in new virtual Shared Billing Arrangement charges that will be billed through the next year of the customer's FMS term plan. This process will continue until the FMS plan has been terminated, or until/unless the customer physically removes the Shared Billing Arrangement circuits from the FMS facilities.

7. Special Access Service (Cont'd)

7.2 Service Descriptions (Cont'd)

7.2.16 Facilities Management Service (Cont'd)

(E) Terms and Conditions (Cont'd)

(13) The customer may also order the Alternate Serving Wire Center (ASWC) optional feature for FMS. ASWC is described in Section 7.2.9(D)(5), subject to the rates specified in Section 30.7.9(C)(5) following for price band rates and 31.7.9(C)(5) following for all other rates.

When ordering ASWC, the commitment period for this optional feature must match that of the FMS plan. When FMS is provided under a term plan of 3 or 5 years, the expiration date of the ASWC optional feature commitment period will be the same date on which the term plan expires for the FMS plan.

(14) When service is provided under a shared billing arrangement as set forth in (12) preceding, all rates and charges applicable to the service user for the type of arrangement involved will apply.

(F) Application of Rates

At the customer's option, FMS is provided on a month-to-month basis, under a 3 year term plan or under a 5 year term plan. The rates for FMS include Standard FMS Channel Terminations, Office FMS Channel Terminations, FMS Channel Mileage, FMS Multiplexing and a rate per DSO equivalent for Administration. Such rates are subject to change over the term selected by the customer, thereby causing an increase or decrease in the rates applicable to the customer. The rates and charges for any other service or option not provided under the FMS rate plan are subject to the rates and charges for the type of service or option being provided. The FMS rate elements and the manner in which such elements apply are described in 1 through 5 following.

(1) Primary Premises Standard Channel Termination

The Primary Premises Standard Channel Termination is a DSO equivalent channel provided over the FMS entrance facilities connecting the customer's primary premises to its serving wire center. At the customer's primary premises, standard channel terminations will be terminated over either an electrical DS3 interface or a DS1 interface.

7. Special Access Service (Cont'd)

7.2 Service Descriptions (Cont'd)

7.2.16 Facilities Management Service (Cont'd)

(F) Application of Rates (Cont'd)

(1) Primary Premises Standard Channel Termination (Cont'd)

The DSO channel terminations provided over a DS3 or higher interface are differentiated as being one of the initial 0 through 672 DSO equivalent channel terminations, for which a flat rate applies, or as being one of the DSO channel terminations over the initial 672, for which a rate for each DSO equivalent channel over 672 DSO equivalent channel terminations applies as specified in Section 30.7.18 following for price band rates and 31.7.18 following for all other rates. For term plan billing, a rate per DSO equivalent channel applies for each DSO channel termination provided and is further subject to the rate bands specified in Section 30.7.18(B)(1) following for price band rates and 31.7.18(B)(1) following for all other rates.

The DSO channel terminations provided over a DS1 interface are differentiated as being one of the initial 0 through 144 DSO equivalent channel terminations, for which a flat rate applies, or as being one of the DSO channel terminations over the initial 144, for which a rate for each DSO equivalent channel over 144 DSO Section 30.7.18 following for price band rates and 31.7.18 following for all other rates.

7. Special Access Service (Cont'd)

7.2 Service Descriptions (Cont'd)

7.2.16 Facilities Management Service (Cont'd)

(F) Application of Rates (Cont'd)

(2) Primary Premises Office Channel Termination

The Primary Premises Office Channel Termination provides for termination of FMS channel terminations to an Expanded Interconnection multiplexing node. At the customer's multiplexing node designated as its primary premises, office channel terminations will be terminated over an electrical DS3 interface or a DS1 interface. (See note below.)

For the DS3 interface, the rates for the primary premises office channel terminations are differentiated as being one of the initial 672 DSO equivalent channel terminations, for which a flat rate applies, or as being one of the DSO channel terminations over the initial 672, for which a rate for each DSO equivalent channel over 672 DSO equivalent channel terminations applies as specified in Section 30.7.18 following for price band rates and 31.7.18 following for all other rates. The rates are further differentiated by the type of billing arrangement (i.e., month-to-month billing or term plan billing).

For the DS1 interface, the rates for the primary premises office channel terminations are differentiated as being one of the initial 144 DSO equivalent channel terminations, for which a flat rate applies, or as being one of the DSO channel terminations over the initial 144, for which a rate for each DSO equivalent channel over 144 DSO equivalent channel terminations applies as specified in Section 30.7.18 following for price band rates and 31.7.18 following for all other rates. The rates are further differentiated by the type of billing arrangement (i.e., month-to-month billing or term plan billing).

Note: See Section 28 for further information.

7. Special Access Service (Cont'd)

7.2 Service Descriptions (Cont'd)

7.2.16 Facilities Management Service (Cont'd)

(F) Application of Rates (Cont'd)

(3) Channel Mileage

The FMS Channel Mileage rate element applies as a fixed rate and a rate per mile for each DSO equivalent channel provided as FMS. The mileage is determined by calculating the airline distance between the serving wire center associated with the primary premises and the wire center (serving wire center or hub, as applicable) associated with the secondary location involved. To determine the rate to be billed, first compute the mileage using the method described in 7.4.6 following and apply the rates shown in Section 30.7.18 following for price band rates and 31.7.18 following for all other rates. FMS Channel mileage applies as follows.

- DS1 channel mileage applies when the primary premises interface is DS1, and the signal rate to the secondary location is DS1 or less.

- Basic DS3/STS1 channel mileage applies when the interface at the primary premises is DS3 or STS1 and the signal rate to the secondary location is less than DS3 or STS1, respectively. Direct DS3/STS1 channel mileage applies when the interface at the primary premises is DS3 or STS1 and the signal rate to the secondary location is DS3 or STS1, respectively.

- OC3 channel mileage applies when the primary premises has an IEF OC3 or OC12 interface and the signal rate to the secondary location is OC3.

- OC12 channel mileage applies when the primary premises has an IEF OC12 interface and the signal rate to the secondary location is OC12.

- DS1, Basic DS3/STS1, and Direct DS3/STS1 channel mileage is provided on a month-to-month basis or under a term plan of 3 or 5 years. OC3 and OC12 channel mileage is provided under a term plan of 3 or 5 years.

7. Special Access Service (Cont'd)

7.2 Service Descriptions (Cont'd)

7.2.16 Facilities Management Service (Cont'd)

(F) Application of Rates (Cont'd)

(4) FMS Multiplexing

FMS multiplexing applies for each DSO equivalent channel provided as FMS. The rate for FMS multiplexing is differentiated by the level of multiplexing performed (i.e., DS3/STS1 to DS1 or DS1 to DSO). DS3/STS1 to DS1 multiplexing is applicable to all DS0 equivalent channels that terminate to a Primary premises and meet type 1 criteria as described in Section (B) preceding.

(5) Administration Fee

An administration fee applies for network administration performed by the Telephone Company. The fee applies for each DSO equivalent channel provided as FMS.

7. Special Access Service (Cont'd)

7.2 Service Descriptions (Cont'd)

7.2.16 Facilities Management Service (Cont'd)

(G) FMS Term Plans

When FMS is provided under a term plan, the customer must select a commitment period of either 3 or 5 years. For new installations, the FMS term plan shall be effective with the first bill following the establishment of FMS. When converting service from a Service Discount Plan to an FMS term plan, no termination liability charges will apply to the Service Discount Plan being discontinued. Additionally, if twenty-four months or more are remaining in the Service Discount Plan being discontinued, the portion of the commitment period already elapsed shall be applied to the FMS term plan on a Time-In Service Credit basis as specified in (1) following.

During the time that the customer is subscribed to an FMS Term Plan, the customer may concurrently subscribe to a National Discount Plan (NDP) in accordance with Section 25.2 following.

(1) Time In-Service Credit (TISC)

TISCs are granted on a per DSO equivalent basis for each Special Access Service converted from a Service Discount Plan to an FMS term plan when the plan being converted has at least twenty-four months remaining in the commitment period. TISCs are granted as follows.

- One TISC is given for each month or major fraction thereof that the service involved was provided under a Service Discount Plan. The maximum number of TISCs granted for a DSO equivalent channel may not exceed sixty (60), i.e., sixty months of credit, for time in-service. For example, at the time of conversion to FMS, a DS3 service under a Service Discount Plan that has been in-service for the past 30 months with 480 of the 672 available channels provisioned will be granted 14,400 TISCs (480 DSO equivalents x 30 months in-service).

- One TISC can be used to offset, or buy down, 1 month of termination liability on a per DSO equivalent basis.

- Twelve (12) TISCs can be used to offset one FMS channel service below the minimum commitment level for a year as described in (E)(4)(c) preceding.

7. Special Access Service (Cont'd)

7.2 Service Descriptions (Cont'd)

7.2.16 Facilities Management Service (Cont'd)

(G) FMS Term Plans (Cont'd)

(2) Renewal, Discontinuance or Conversion of an FMS Term Plan

The customer must provide the Telephone Company with at least three months' written notice prior to expiration of the commitment period of its desire to renew, discontinue or convert its FMS Term Plan.

(a) Renewal of the FMS Term Plan

At the customer's option, the expiring FMS term plan may be renewed for either a 3-year term or a 5-year term. The commitment level of the renewed plan will be equal to the number of DS0 equivalent services that are actually in-service as of the date of renewal.

(b) Discontinuance of an FMS Term Plan

When the customer notifies the Telephone Company of its desire to discontinue its FMS term plan upon expiration of the commitment period, the Telephone Company will, upon request, assist the customer in designing a dedicated Special Access Service network which supports the customer's traffic requirements.

In the event that the customer wishes to discontinue FMS and establish a new network arrangement, nonrecurring charges will not apply to convert the in-service channel terminations to a new network arrangement. Nonrecurring charges will apply for the installation of any additional channel terminations or optional features being established with the new network arrangement.

7. Special Access Service (Cont'd)

7.2 Service Descriptions (Cont'd)

7.2.16 Facilities Management Service (Cont'd)

(G) FMS Term Plans (Cont'd)

(2) Renewal, Discontinuance or Conversion of an FMS Term Plan (Cont'd)

(c) Conversion of an FMS Term Plan

When the customer notifies the Telephone Company of its desire to convert its FMS Services to standard Special Access Services, FMS rates will continue to apply after expiration of the FMS term plan until such time as the conversion is complete or for a period not to exceed six months, whichever occurs first. Such FMS rates will apply only to the services not yet converted, through the date of conversion or six months, as applicable.

In the event that the Telephone Company does not receive written notification from the customer of its desire to renew, discontinue or convert its FMS Term Plan, the expiring FMS Term Plan will be renewed upon expiration of the plan. The commitment level of the renewed plan will be equal to the number of DS0 equivalent services that are actually in service as of the date of renewal. The renewed plan will also have a commitment period equal to that of the expiring plan and the plan will be considered new. The renewed plan will be effective no later than the second bill period following the date of renewal. Billing based on the expiring plan and the expiring commitment level will continue until the renewed plan is in effect. If, within the first sixty (60) days of the date of renewal, the customer elects to cancel the renewed plan, discontinue the renewed plan or convert its FMS Services to standard Special Access Services, termination liability will not apply to make such changes.

7. Special Access Service (Cont'd)

7.2 Service Descriptions (Cont'd)

7.2.16 Facilities Management Service (Cont'd)

(G) FMS Term Plans (Cont'd)

(3) Termination Liability

(a) When Termination Liability Does Not Apply

Termination Liability does not apply when FMS is disconnected for the following reasons.

(i) Cancellation of an FMS term plan within thirty (30) days of the effective date of a Telephone Company initiated rate increase that is greater than eight percent on any rate applicable to FMS.

(ii) Cancellation or conversion of an FMS Term Plan within the first sixty days following renewal of the plan under (G)(2)(c) preceding.

(iii) Conversion of an FMS term plan to an FMS term plan with a longer commitment period. The replacing FMS term plan will be subject to termination liability as specified in (b) following.

(iv) Conversion of an FMS term plan to a Service Discount Plan as set forth in Section 7.4.10 following, a Commitment Discount Plan as set forth in Section 25.1 following, or a National Discount Plan as set forth in Section 25.2 following, provided that the following conditions are met.

- FMS has been in-service for a minimum of twelve months; and
- the quantity of DSO equivalent channel terminations in the new plan is equal to, or greater than, ninety percent (90%) of the existing FMS primary premises channel terminations or 90% of the original commitment level of FMS primary premises channel terminations, whichever is greater; and
- the commitment period for the new Service Discount Plan, Commitment Discount Plan, or National Discount Plan is equal to, or greater than, the time remaining in the FMS term plan being converted, except where an equal to or greater than commitment period is not available, in which case the longest available commitment period must be selected.

7. Special Access Service (Cont'd)

7.2 Service Descriptions (Cont'd)

7.2.16 Facilities Management Service (Cont'd)

(G) FMS Term Plans (Cont'd)

(3) Termination Liability (Cont'd)

(b) When Termination Liability Applies

Termination Liability applies when FMS is discontinued prior to the end of the selected commitment period, except as set forth in (a) preceding. The termination liability charge is computed as follows.

(i) If FMS is discontinued within the first year of the selected commitment period, the termination liability charge is 100% of the total FMS monthly charges for each month and fraction thereof remaining in the twelve month minimum service period, plus 20% of the total monthly charges for each month and fraction thereof beginning the month following the minimum service period for the balance of the commitment period for the plan.

(ii) If service is discontinued, or the customer wishes to buy down the commitment level as described in (E)(4)(a) preceding after the minimum service period has been satisfied but prior to the end of the selected commitment period, the termination liability charge is an amount equal to 20% of the total monthly charges for each month and fraction for the balance of the commitment period for the plan.

(iii) When calculating the termination liability charge, the total monthly charges to be used will be the total monthly charges billable as of the date of discontinuance.

7. Special Access Service (Cont'd)

7.2 Service Descriptions (Cont'd)

7.2.17 Reserved

7. Special Access Service (Cont'd)

7.2 Service Descriptions (Cont'd)

7.2.18 LAN Extension Service#

(A) General

LAN (Local Area Network) Extension Service (LES) provides fiber transport connectivity between:

(1) two customer designated premises (one of which must be a service provider's point of presence with the other being one of the service provider's end user); or
(2) a customer designated premises and Expanded Interconnection arrangement; or
(3) a customer designated premises (must be a service provider's point of presence) and a wire center where connection to a Telephone Company-provided TransConnect LAN Service Network-to-Network Interface (NNI) Port Only Connection occurs; or
(4) an Expanded Interconnection arrangement and another wire center (i.e., other than the wire center where the Expanded Interconnection arrangement is provided) where connection to a Telephone Company-provided TLS NNI Port Only Connection occurs.

LES may also be connected to Telephone Company provided switched Ethernet service, where such connections are technically and operationally feasible, as determined by the Telephone Company.

* Service is limited to existing customers of record as of February 11, 2003. Customers who are already subscribing to LES with a 16 Mbps Token Ring interface as of February 11, 2003, may continue with the service, add additional circuits or move service as needed.

The following footnote is not applicable to the Office Channel Termination, Virtual Office Channel Termination or Enhanced Ordering Option rate elements of LES. Effective May 31, 2007, orders for new LES are no longer permitted. The Telephone Company will continue to provide LES pursuant to this Section 7.2.18 on any existing LES that is in-service as of May 31, 2007, or any order for LES that is placed with the Telephone Company prior to May 31, 2007 (collectively, Existing LES), subject to the following conditions:

a. For any Existing LES that is currently subscribed to a term plan (i.e., commitment periods of 3- and 5-years), the Telephone Company will continue to provide Existing LES for an additional six (6) months beyond the expiration date of the customer's current commitment period, or until the customer replaces the Existing LES with a comparable Telephone Company provided service, or discontinues service, whichever comes first. Moves, additions, and/or changes are not permitted.
b. For any Existing LES whose term plan expired prior to May 31, 2007, but the Existing LES continued on a month-to-month basis at prevailing rates, the Telephone Company will continue to provide Existing LES purchased on a month-to-month basis until November 30, 2007, or until the customer replaces the Existing LES with a comparable Telephone Company provided service, or discontinues service, whichever comes first. Moves, additions, and/or changes are not permitted.

7. Special Access Service (Cont'd)

7.2 Service Descriptions (Cont'd)

7.2.18 LAN Extension Service# (Cont'd)

(A) General

LES is a point-to-point service, offered with a 10Mbps, 16Mbps Token Ring*, 100Mbps, 1Gbps Ethernet or 1Gbps Extended Distance interface connection, available where facilities and conditions permit. Where suitable facilities and conditions are not available to provide LES, facilities may be specially constructed subject to the provisions set forth in Sections 2.1.4, Provision of Services, and 5.1.3, Special Construction, preceding.

(B) Service Description

LES is provisioned over two dedicated fiber strands between the two locations involved where service is delivered over the network interface specified by the customer. The LES network interface converts the optical signal to an electrical Ethernet signal at speeds of 10 Mbps, 16 Mbps Token Ring* or 100 Mbps. The 1 Gbps network interface enables LES to be delivered as an optical signal.

When LES is delivered to an Expanded Interconnection arrangement, service will be cross-connected to the Expanded Interconnection multiplexing node or virtual collocation arrangement as described in Section 28, following. The provision of LES at 100Mbps, 1Gbps or 1Gbps Extended Distance may include the use of dense wave division multiplexing technology, where available.

Service availability limited. Refer to # footnote on Page 7-151.

* Service is limited to existing customers of record as of February 11, 2003. Customers who are already subscribing to LES with a 16 Mbps Token Ring interface as of February 11, 2003, may continue with the service, add additional circuits or move service as needed.

7. Special Access Service (Cont'd)

7.2 Service Descriptions (Cont'd)

7.2.18 LAN Extension Service# (Cont'd)

(B) Service Description (Cont'd)

When LES connects to a TLS NNI Port Only Connection or Telephone Company provided switched Ethernet service network-to-network interface port only connection, it is offered only with a 1 Gbps Ethernet or 1 Gbps Extended Distance interface.

The Telephone Company's equipment at the customer's designated premises must be on conditioned power circuits (surge protected); the Telephone Company recommends an uninterrupted power supply (UPS).

No credit allowance for a service interruption is provided with LES.

Service intervals for LES are specified in Section 5.2.1 preceding.

(C) Technical Specifications

LES requires the use of single mode, fiber optic facilities that meet the following specifications:

1310nm with a loss of 20dB or less for 10Mbps Ethernet
1310nm with a loss of 26dB or less for 100Mbps Ethernet
1310nm with a loss of 18dB or less for 1Gbps Ethernet
1550nm with a loss of 26dB or less for 1Gbps Ethernet (extended distance)

The dB loss is measured to include the special transport facility when applicable and any local and intra-building fibers used in the provision of LES.

(D) Responsibilities and Rights of the Telephone Company

- The Telephone Company will provide the necessary fiber converter at the customer's designated premises to meet the interface requirements specified on the order for service.
- The Telephone Company is responsible for service up to and including the network interface. The Telephone Company's responsibility is limited to the furnishing of communications facilities suitable for LES.
- LES will not be available during those times when the Telephone Company must perform software updates and other maintenance. The Telephone Company will provide customers reasonable and timely notification to minimize impacts to the customer's service. The Telephone Company reserves the right to temporarily interrupt LES at other times in emergency situations.
- All other general regulations pertaining to the responsibilities and rights of the Telephone Company as specified in Section 2, preceding also apply.

Service availability limited. Refer to # footnote on Page 7-151.

7. Special Access Service (Cont'd)

7.2 Service Descriptions (Cont'd)

7.2.18 LAN Extension Service# (Cont'd)

(E) Responsibilities of the Customer

- The customer is responsible for all wiring and connections of its local area network to the customer side of the network interface or fiber distributing frame, as applicable.
- The LES customer is responsible for the installation, operation and maintenance of any customer provided equipment.
- The customer must provide a protected path for all network fibers on private property, sufficient AC or DC power to network interface equipment, access to all sites as needed by the Telephone Company personnel to perform services and a secure environment for the network equipment.
- The customer must provide a relay rack or wall space for mounting of the network interface device.
- The customer must provide connecting facility assignment (CFA) to which LES will be cross-connected to its Expanded Interconnection arrangement.
- The customer is responsible for any damage to the Company's network equipment resulting from problems with power provided by the customer at its locations. With the exception of connecting customer provided equipment to the network interface device, the customer may not attempt to modify, adjust or otherwise change Telephone Company owned facilities or network equipment used in the provision of service. The Telephone Company reserves the right to discontinue the provision of LES to a customer who tampers with Telephone Company owned equipment and/or facilities.
- The Telephone Company does not monitor the LES circuit. The customer may perform its own monitoring using surveillance equipment within its own network.

Service availability limited. Refer to # footnote on Page 7-151.

7. Special Access Service (Cont'd)

7.2 Service Descriptions (Cont'd)

7.2.18 LAN Extension Service# (Cont'd)

(F) Rate Regulations

(1) The rates and charges for LES apply as channel terminations and channel mileage. The LES channel termination provides the transmission path to connect a customer designated premises to the associated serving wire center. Included as part of the LES channel termination is a converter interface arrangement which defines the technical characteristics and transmission rate of the service. LES channel terminations apply as a monthly recurring rate and nonrecurring charge for each termination provided. LES channel mileage applies as a recurring monthly charge for the airline distance between the serving wire centers associated with the locations involved. Channel mileage recurring monthly rates apply as a fixed and per mile rate element.

When LES connects a customer designated premises and an Expanded Interconnection Arrangement, as set forth in 7.2.18(A)(2) preceding, an LES Channel Termination rate element will not apply at the Expanded Interconnection arrangement end of the service.

When LES connects to a TLS NNI Port Only Connection, as set forth in 7.2.18(A)(3) preceding, the NNI Port Only Connection rate element will apply in lieu of an LES channel termination at the TLS end of the service.

When LES connects an Expanded Interconnection arrangement to a TLS NNI Port Only Connection in another wire center, as set forth in 7.2.18(A)(4) preceding, an LES Channel Termination rate element will not apply at the Expanded Interconnection arrangement end of the service and an NNI Port Only Connection rate element will apply in lieu of an LES channel termination at the TLS end of the service. LES channel mileage will apply for the airline distance between the serving wire centers associated with the locations involved.

When LES connects to a Telephone Company provided switched Ethernet service network-to-network interface port only connection, the LES channel termination will not apply at the switched Ethernet service end of the service.

When LES connects an Expanded Interconnection arrangement to a switched Ethernet service network-to-network interface port only connection in another wire center, an LES Channel Termination rate element will not apply at either the Expanded Interconnection arrangement end of the service or the switched Ethernet service end of the service. LES channel mileage will apply for the airline distance between the serving wire centers associated with the locations involved.

Service availability limited. Refer to # footnote on Page 7-151.

7. Special Access Service (Cont'd)

7.2 Service Descriptions (Cont'd)

7.2.18 LAN Extension Service# (Cont'd)

(F) Rate Regulations (Cont'd)

(2) LES Term Plans

(a) LES is provided with a term plan of 3 or 5 years at rates set forth in Section 30.7.20 following for price band rates and charges and 31.7.20 following for all other rates and charges. The customer must specify the term plan selected in its order for service. Rate elements associated with terminating LES at an Expanded Interconnection arrangement are provided on a month-to-month basis and will not be included in the term plan for the associated service.

(b) At any time during the term commitment period, the customer may replace LES with LES of a higher transmission rate without incurring termination liability on the LES being replaced, provided that the term plan of the replacing LES is equal to, or greater than, the term commitment period of the plan being replaced.

(c) At any time during the term commitment period, the customer may convert to a new LES term plan of the same or different term commitment, subject following:

- No time-in-service credit will be granted for the period of time the replaced term commitment period was in effect.

- Termination liability will not apply to the plan being replaced, provided that the term commitment period of the replacing plan is equal to or longer than the term commitment period being replaced.

Service availability limited. Refer to # footnote on Page 7-151.

7. Special Access Service (Cont'd)

7.2 Service Descriptions (Cont'd)

7.2.18 LAN Extension Service# (Cont'd)

(F) Rate Regulations (Cont'd)

(2) LES Term Plans (Cont'd)

(d) All rate elements associated with LES must be under the same term plan with the same term commitment period.

(e) At expiration of the term commitment period, the prevailing rates for the current plan will continue until the customer service or requests a new term plan.

(f) If service is disconnected in whole or in part prior to the end of the selected term commitment period, termination liability equal to the applicable monthly rate for the service multiplied by the number of months remaining in the unexpired portion of the term plan will apply. Minimum period charges as set forth in Section 5.2.5 preceding may also apply.

(g) Termination liability will not apply if the customer disconnects service due to a Telephone Company initiated rate increase. Within sixty calendar days of the rate increase, the customer must notify the Telephone Company in writing of its intent to disconnect service due to the increased rate and must disconnect the service within ninety calendar days of the rate increase.

(3) Cancellation of a LES order in whole or in part prior to the establishment of service is subject to the cancellation charges set forth in Section 5.2.3 preceding.

(4) A move in the point of termination of LES is subject to the regulations set forth in Section 7.4.5 and 7.4.10(C)(5) following.

(5) The minimum period for LES is three years. LES Office Channel Terminations and Virtual Office Channel Terminations are subject to a three month minimum period.

Service availability limited. Refer to # footnote on Page 7-151.

7. Special Access Service (Cont'd)

7.2 Service Description (Cont'd)

7.2.19 IntelliBeam Optical Transport Service#

(A) General

IntelliBeam Optical Transport Service (IOTS) provides managed optical transport of multiple protocols which are transmitted over a single fiber optic pair. IOTS is configured in a diversely routed ring architecture or topology and can be arranged as a full (closed) ring or as a partial ring. The ring architecture allows for point-to-point optical services of varying wavelengths to be multiplexed on or off of the ring.

IOTS allows for the native transmission of multiple high-speed protocols of various wavelengths over a single customized network. The wavelengths are arranged in a channelized format such that the protocol transmitted over each channel is independent of every other channel on the IOTS ring. The customer must specify, by channel, the interface that defines the transmission speed and protocol being transmitted over the associated wavelength.

(B) Terms and Conditions

An IOTS full (closed) ring provides connectivity to multiple customer designated locations (nodes). A full ring must have a minimum of three nodes at different locations or two nodes at different locations with a network optimization mid-span amplifier. At least one of the devices (node or amplifier) must be located in a Telephone Company Central Office (CO) and one must be located at a customer's designated premises.

Effective February 15, 2007, orders for new IOTS rings (including both partial and full rings) are no longer permitted. The Telephone Company will continue to provide IOTS pursuant to this Section 7.2.19 on any existing IOTS that is in-service as of February 15, 2007, or any order for IOTS that is placed with the Telephone Company prior to February 14, 2007 (collectively, Existing IOTS), subject to the following conditions:

a. For any Existing IOTS that is currently subscribed to a term plan (i.e., commitment periods of 3-, 5-, and 7-years), the Telephone Company will continue to provide the Existing IOTS for an additional six (6) months beyond the expiration date of the customer's current commitment period, or until the customer discontinues service, whichever comes first. Subject to availability of facilities and equipment, certain moves, additions and/or changes to the Existing IOTS are permitted provided that such moves, additions and/or changes do not require a new commitment period or an extension to an existing commitment period.

b. For any Existing IOTS whose term plan expired prior to February 15, 2007, but the Existing IOTS continued on a month-to-month basis at prevailing rates, the Telephone Company will continue to provide the Existing IOTS until August 16, 2007, or until customer discontinues service, whichever comes first. Moves, additions, and/or changes are not permitted.

7. Special Access Service (Cont'd)

7.2 Service Description (Cont'd)

7.2.19 IntelliBeam Optical Transport Service# (Cont'd)

(B) Terms and Conditions (Cont'd)

An IOTS partial ring connects multiple customer designated locations (nodes) between fiber-meet locations at which high-speed interconnection of the Telephone Company's backbone network facilities to the customer's facilities or the facilities of a third party occurs. Partial ring service may only be interconnected to (1) another partial ring provided by the Telephone Company or (2) ring facilities provided by the customer or a third party. The portion of the ring provided by the customer or third party must use vendor equipment that matches the equipment used by the Telephone Company and must maintain the same vintage in software release as the Telephone Company. Upon written notice by the Telephone Company, the customer or third party will have sixty (60) days in which to complete the change-out of any software release deployed by the Telephone Company. A fiber-meet may occur at a customer's designated premises, in a Telephone Company CO, or at a location that is mutually agreeable to both the customer and the Telephone Company. Such location will be designated as a premises for the purpose of administering the general regulations set forth in this tariff.

When the fiber-meet occurs at a customer's designated premises, the point of interconnection between the Telephone Company's facilities and the facilities of the customer or of a third party shall be a node.

When the fiber-meet occurs in a Telephone Company CO, high-speed interconnection from the device (node or amplifier) occurs at a Collocation arrangement via fiber cross-connects between the Telephone Company's fiber optic facilities and the customer's or third party's facilities.

When the fiber-meet occurs at a mutually agreed upon location, the point of interconnection shall be a high-speed (pass-through) interface as set forth in (C)(4) following.

The fiber-meet is subject to the regulations set forth in (B)(1) through (B)(5) following. A partial ring must have a minimum of two devices (nodes or amplifiers) one of which must be a node. Additionally, at least one of the devices (node or amplifier) must be located in a Telephone Company CO. When the fiber-meet occurs via a high-speed (pass-through) interface at a mutually agreed upon location, that interface is provided in lieu of the device (node or amplifier) at that location.

Service availability limited. Refer to # footnote on Page 7-158.

7. Special Access Service (Cont'd)

7.2 Service Description (Cont'd)

7.2.19 IntelliBeam Optical Transport Service# (Cont'd)

(B) Terms and Conditions (Cont'd)

The Telephone Company's network design will define the optical parameters at the fiber-meet locations. The Telephone Company is responsible for the quality and integrity of the high-speed optical signal at the fiber-meet where its facilities are interconnected to the facilities of the customer or of the third party. The Telephone Company bears no responsibility for the optical parameters beyond the fiber-meet (i.e., in the facilities of the customer or of the third party). The customer or third party is responsible for engineering its portion of the jointly provided ring. At their option, the Telephone Company will engineer the customer or third party's portion of the ring within the LATA subject to Additional Engineering as set forth in Section 13.1 following.

The IOTS ring is comprised of nodes, ring mileage, network optimization (amplification), high-speed (pass-through) interfaces (certain partial ring configurations only), and optical transport channels. These elements are described in (C) following and are provided at the rates set forth in Sections 30.7.21 following for price band rates and charges and 31.7.21 following for all other rates and charges).

The customer will be billed additional charges for any charges levied the Telephone Company for space and power required to place nodes on the Company's side of the network interface.

Connection of DSR to an IOTS ring is provided over an equal speed, unprotected optical transport channel (e.g. a 155.52 Mbps unprotected channel would connect to an OC3 DSR node). Each node on the DSR ring must be located at the same customer designated premises or in the same Telephone Company CO as its corresponding IOTS node. All other applicable DSR regulations as set forth in Section 34.1 apply to the derived DSR Service.

Service availability limited. Refer to # footnote on Page 7-158.

7. Special Access Service (Cont'd)

7.2 Service Description (Cont'd)

7.2.19 IntelliBeam Optical Transport Service# (Cont'd)

(B) Terms and Conditions (Cont'd)

Connection of IntelliBeam Broadband Transport (IBT) to an IOTS ring is provided over an equal speed OC3/OC3c, OC12/OC12c, OC48/OC48c or OC192/OC192c protected or unprotected optical transport channel as described in (C)(5) following.

Connection of an Optical Network OC3c or OC12c Ethernet-to-SONET mapped service is provided over an equal speed SONET OC3c or OC12c protected optical transport channel as described in (C)(4) following.

Connection of an Optical Network 1 Gbps Ethernet Full Rate service is provided over a Gigabit Ethernet optical transport channel.

An IOTS ring may also be connected to a Telephone Company provided dedicated SONET ring, Telephone Company provided point-to-point SONET service, or Telephone Company provided Optical Network service, provided that such connections are technically and operationally feasible, as determined by the Telephone Company.

The use of a multi-port interface card requires that all channels on a single card be interrupted during periods when the Telephone Company is performing maintenance on that card. No credit for such periods of interruption will apply.

The customer is responsible to ensure that its facilities and equipment meets any applicable technical requirements or limitations for the protocol being transmitted over the optical transport channels.

The Telephone Company is responsible for the overall design and configuration of the IOTS ring. Construction of the ring will not begin until such design and configuration are mutually agreeable to both the customer and the Telephone Company.

Credit for service interruption of IOTS is set forth in Section 2.8.1.1 (B) preceding.

The technical specifications for IOTS are delineated in Technical Publications GR-2918-CORE, Issue 4, GR-2979-CORE, Issue 3, GR-1312-CORE, Issue 3, ITU-T G.959.1 and ITU-T G.692. Technical specifications for the underlying protocols transmitted over the IOTS ring are specified in (C)(4) following.

Service availability limited. Refer to # footnote on Page 7-158.

7. Special Access Service (Cont'd)

7.2 Service Description (Cont'd)

7.2.19 IntelliBeam Optical Transport Service# (Cont'd)

(B) Terms and Conditions (Cont'd)

When IOTS is provided in a partial ring configuration, the following applies.

(1) The customer must provide the Telephone Company with its fiber optic facility requirements (i.e., whether it will use single mode fiber or multi-mode fiber) prior to the Telephone Company ordering the necessary devices (nodes and amplifiers) to provide the requested service. The customer may utilize its own fiber optic facilities or the facilities of a third party.

(2) The customer must provide, at no cost to the Telephone Company, suitable and secure space, suitable environmental conditions, an uninterrupted power supply, building entrance facilities, and conduit for placement of the facilities and network equipment at its locations as necessary to provide the service.

(3) Interconnection to IOTS partial ring services may occur (i) at the customer's designated premises for which interconnection will occur via a node; (ii) in a Telephone Company CO for which a node or amplification device and fiber cross-connects to a collocation arrangement within that CO apply. Fiber cross-connects used with IOTS partial ring service are the IBT fiber cross-connects as described in Section 26.1.5(D)(1)(a) following; or (iii) at a mutually agreed upon location via a high-speed (pass-through) interface as described in (C)(4) following.

(4) Interconnection to IOTS partial ring service is limited to high-speed fiber interconnection of the Telephone Company's backbone network fiber optic facilities and the fiber optic facilities of the customer or of a third party. Except as allowed under (C)(4) following, interconnection to other Telephone Company services may not occur at a premises which the customer has designated as its fiber-meet location.

(5) When ordering a transport channel that originates at and terminates to devices that are not within the partial ring provided by the Telephone Company, the customer must provide the Telephone Company with a copy of the order. This order provides the Telephone Company with authority to perform the necessary mapping of the channel through the partial ring to ensure continuity of the signal over the jointly provided ring. A Channel Mapping nonrecurring charge will apply for each channel mapped through the Telephone Company provided partial ring. Channel mapping charges do not apply when ordering point-to-point or point-to-meet-point optical transport channels. Channel mapping is further described in (C)(5) following at the charge set forth in Section 31.7.21(G) following.

Service availability limited. Refer to # footnote on Page 7-158.

7. Special Access Service (Cont'd)

7.2 Service Description (Cont'd)

7.2.19 IntelliBeam Optical Transport Service# (Cont'd)

(C) Service Components

Nodes are DWDM devices located at customer designated premises or Telephone Company wire centers from which optical transport channels are multiplexed on or off of the IOTS ring. The type of node that is deployed at each location is determined by the number of optical transport channels that will be multiplexed on or off of the IOTS ring at that location.

4 Channel Node
Placement of a 4 channel node at a location enables up to 4 protected optical transport channels to be deployed. Each protected optical channel may be replaced by two unprotected optical channels up to a maximum of 8 possible channels on the node. A 4 channel node may be utilized as the primary node at a location or as an expansion node to expand the capacity of a 16 channel primary node. 4 channel nodes are subject to the availability of suitable facilities and equipment to provide such device. No more than one 4 channel node will be provided at a location.

16 Channel Node
Placement of a 16 channel node at a location enables up to 16 protected optical transport channels to be deployed. Each protected optical channel may be replaced by two unprotected optical channels up to a maximum of 32 possible channels on the primary node.

The capacity of a 16 channel primary node may be increased through the addition of an expansion node at the same location. A 4 channel expansion node enables up to 20 protected optical transport channels (i.e., 16 on the primary node and 4 on the expansion node) to be deployed at a single location. Each protected optical channel may be replaced by 2 unprotected optical channels up to a maximum of 40 possible channels at that location. A 16 channel expansion node enables up to 32 protected optical transport channels (i.e., 16 on the primary node and 16 on the expansion node) to be deployed at a single location. Each protected optical channel may be replaced by two unprotected optical channels up to a maximum of 64 possible channels at that location.

The maximum number of optical transport channels that can be deployed at a single location is dependent upon the specific configuration of the IOTS ring and the type of optical transport channels being deployed from that location.

Service availability limited. Refer to # footnote on Page 7-158.

7. Special Access Service (Cont'd)

7.2 Service Description (Cont'd)

7.2.19 IntelliBeam Optical Transport Service# (Cont'd)

(C) Service Components (Cont'd)

(2) For full ring service configurations, IOTS Ring Mileage is the total of airline distances between devices (nodes and amplifiers) rounded up to the nearest mile. The mileage rate is based on total ring capacity and not on individual services between devices. For example, the mileage charge for a five device ring with two mid-span amplifiers and a distance of 4.3 miles between each device (21.5 total miles) would be calculated by multiplying the mileage rate in Section 30.7.21 following for price band rates or 31.7.21 following for all other rates by 22 miles.

For partial ring service configurations, IOTS Ring Mileage is the total of linear airline distances between fiber-meet locations (customer designated premises, CO, or mutually agreed upon location, as applicable) and each device (node or amplifier) on the partial ring. The total mileage is then rounded up to the nearest mile.

The mileage between devices (e.g., an initial node and an expansion node or an at-node amplifier, as applicable) located at the same customer designated premises or Telephone Company CO is zero. This mileage calculation applies regardless of the number of services on the ring.

(3) Network Optimization provides for amplification of the signal to ensure acceptable optical levels. When required, amplification is performed at the node (primary node or expansion node) or in a Telephone Company CO when mid-span amplification of the signal is required between nodes. Node amplification occurs in one or two directions (East to West and/or West to East). Amplification in two directions requires the use of two at-node amplifiers. Mid-span amplification occurs simultaneously in both directions (East to West and West to East). The Telephone Company shall have sole responsibility in determining when amplification is required and the quantity and type of amplification necessary to maintain acceptable optical levels.

(4) A high-speed (pass-through) interface is a device placed at a mutually agreed upon fiber-meet location where interconnection between the facilities of the Telephone Company and those of the customer or of a third party provider occurs. The high-speed (pass-through) interface will not be utilized when such interconnection occurs within a Telephone Company CO (for which a node or amplification device and fiber cross-connects apply) or at a customer's designated premises for which interconnection via a node occurs. Connection to other Telephone Company services is prohibited at locations utilizing a high-speed (pass-through) interface.

Service availability limited. Refer to # footnote on Page 7-158.

7. Special Access Service (Cont'd)

7.2 Service Description (Cont'd)

7.2.19 IntelliBeam Optical Transport Service# (Cont'd)

(C) Service Components (Cont'd)

(5) Optical transport channels allow for optical services to be multiplexed on to or off of the IOTS ring at locations equipped with an IOTS node. An optical interface at the node allows for connection of the applicable protocol to the customer's equipment.

Optical transport channels are provided on a node-to-node (i.e., point-to-point) basis or between a location equipped with an IOTS node and a fiber-meet location. These channels are provided on a point-to-fiber-meet basis. When a channel that originates at and terminates to devices which are not within the partial ring, the Telephone Company must map that channel through the partial ring to ensure continuity of the signal over the jointly provided ring. A Channel Mapping nonrecurring charge as set forth in Section 31.7.21(G) following applies in lieu of the rates and charges for a point-to-point or point-to-fiber-meet transport channel.

Optical Transport Channels are available on a protected or unprotected basis depending on the protocol being transmitted and the level of redundancy required for the optical channel. These channels may be ordered using a single-port interface (each a single channel per interface card) or using a multi-port interface. A multi-port interface is a facility capable of supporting up to 4 multi-port channels of ESCON®, Fibre Channel, FDDI, Fast Ethernet, D1 Video, or any combination of these multi-port channels. A multi-port optical transport channel provides a two-point facility over the IOTS ring for the purpose of aggregating multiple optical channels over a single wavelength.

Some protocols have facility distance limitations and may affect the design or availability of the IOTS ring or its optical transport channels. The multi-port interface is provided with a short reach, 2-fiber interface with a 1310nm signal.

A protected optical channel allows for a single signal from the customer to be duplicated and sent over separate diverse routes (working and protect) within the IOTS network.

An unprotected optical channel provides minimum protection of the signal from the customer. End-to-end protection is provided by the protection inherent in the connecting service provided by the Telephone Company (e.g., DSR), as applicable.

Service availability limited. Refer to # footnote on Page 7-158.

7. Special Access Service (Cont'd)

7.2 Service Description (Cont'd)

7.2.19 IntelliBeam Optical Transport Service# (Cont'd)

(C) Service Components (Cont'd)

(5) (Cont'd)

Optical transport channels are delivered over a single-port interface or multi-port interface unless otherwise specified. The use of a multi-port interface and the type of optical transport channels that can be provided over a single-port or multi-port interface are subject to the availability of suitable equipment to provide the requested service.

All signals generated by Customer provided equipment and delivered to the Telephone Company for multiplexing on to IOTS must meet industry standards and specifications for the underlying protocol. The customer is responsible to perform any error detection and error correction of the data generated by its equipment. The Telephone Company assumes no responsibility for the quality of the signal generated by the customer or any customer provided equipment and will deliver the signal to the receiving location in the same format and condition as generated by the customer.

Service availability limited. Refer to # footnote on Page 7-158.

7. Special Access Service (Cont'd)

7.2 Service Description (Cont'd)

7.2.19 IntelliBeam Optical Transport Service# (Cont'd)

(C) Service Components (Cont'd)

(5) (Cont'd)

The Telephone Company will transmit the following protocols over IOTS optical transport channels:

SONET OC3 – for transmission of 155.52 Mbps synchronous optical data transmission capability. SONET OC3 is delivered over a single-port interface only.

SONET OC3c – for transmission of concatenated 155.52 Mbps synchronous optical data transmission capability. SONET OC3c is delivered over a single-port interface only.

SONET OC12 – for transmission of 622.08 Mbps synchronous optical data transmission capability. SONET OC12 is delivered over a single-port interface only.

SONET OC12c – for transmission of concatenated 622.08 Mbps synchronous optical data transmission capability. SONET OC12c is delivered over a single-port interface only.

SONET OC48 – for transmission of 2.488 Gbps synchronous optical data transmission capability. SONET OC48 is delivered over a single-port interface only.

SONET OC48c – for transmission of concatenated 2.488 Gbps synchronous optical data transmission capability. SONET OC48c is delivered over a single-port interface only.

SONET OC192 – for transmission of 9.953 Gbps synchronous optical data transmission capability. SONET OC192 is delivered over a single-port interface only.

SONET OC192c – for transmission of concatenated 9.953 Gbps synchronous optical data transmission capability. SONET OC192c is delivered over a single-port interface only.

10 Gigabit Ethernet LAN-PHY – 10GBASE-R (LAN PHY) interfaces offer an effective line rate of 10.3125 Gbps (10 Gbps of data traffic encoded in a 64B/66B protocol compared to the traditional 8B/10B protocol of Gigabit Ethernet). 10 Gigabit Ethernet LAN-PHY is delivered over a single-port interface only.

10 Gigabit Ethernet WAN-PHY – 10GigE data rate and format compatible with the SONET OC192c transmission format defined by ANSI. 10 Gigabit Ethernet WAN-PHY is delivered a single-port interface only.

Service availability limited. Refer to # footnote on Page 7-158.

7. Special Access Service (Cont'd)

7.2 Service Description (Cont'd)

7.2.19 IntelliBeam Optical Transport Service# (Cont'd)

(C) Service Components (Cont'd)

(5) (Cont'd)

ESCON®* – for transmission of one 200 Mbps Enterprise Service CONnection channels between the same two IOTS nodes used for computer-to-computer data exchange. An ESCON® signal is limited to a maximum distance of 43km (physical route kilometers) between the locations involved. ESCON® is delivered over a multi-port interface only.

FICON* – for transmission of 1 Gbps and 2 Gbps Fibre CONnection among mainframes, storage devices and peripherals on a single channel. A FICON signal is limited to a maximum distance of 100km (physical route kilometers) between the locations involved. FICON is delivered over a single-port interface only.

Fibre Channel* – for transmission of 2.125 Gbps, 1.0625 Gbps, 531 Mbps, 266 Mbps, and 133 Mbps signals in a serial link between supercomputers, mainframes, workstations, desktop computers, storage devices, displays and other peripherals. A Fibre Channel signal is limited to a maximum distance of 100km (physical route kilometers) between the locations involved. Fibre Channel signals at transmission speeds of 2.125 Gbps, 1.0625 Gbps, 531 Mbps, 266 Mbps, and 133 Mbps are delivered over a single-port interface. Fibre Channel signals at transmission speeds of 266 Mbps and 133 Mbps may also be delivered over a multi-port interface.

ETR/CLO* – a channel for transmission of an 8 Mbps External Timing Reference/Control Link Oscillator signal for distributing time-of-day information to all central processing units in the Sysplex and to keep the Sysplex timer units synchronized with each other. An ETR/CLO signal is limited to a maximum distance of 40km (physical route kilometers) between the locations involved. ETR/CLO is delivered over a single-port interface only.

FDDI* – for transmission of 100 Mbps Fiber Distributed Data Interface channels for general purpose interconnection between computers and peripheral equipment, including interconnection of Local Area Networks and other networks. FDDI is delivered over a single-port or multi-port interface.

Service availability limited. Refer to # footnote on Page 7-158.

* Denotes an optical transport channel.

7. Special Access Service (Cont'd)

7.2 Service Description (Cont'd)

7.2.19 IntelliBeam Optical Transport Service# (Cont'd)

(C) Service Components (Cont'd)

(5) (Cont'd)

ISC* – for transmission of 1.06 Gbps Intersystem Channel for data caching, locking and queuing services between coupling facility and a central processing unit. An ISC signal is limited to a maximum distance of 40km (physical route kilometers) between the locations involved. ISC is delivered over a single-port interface only.

ISC3* – for transmission of 2.125 Gbps Intersystem Channel for data caching, locking and queuing services between coupling facility and a central processing unit. An ISC3 signal is limited to a maximum distance of 100km (physical route kilometers) between the locations involved. ISC3 is delivered over a single-port interface only.

Fast Ethernet* – for 100 Mbps transmission of Ethernet. Fast Ethernet is delivered over a single-port or multi-port interface.

Gigabit Ethernet* – for 1.0 Gbps transmission of Ethernet. Gigabit Ethernet is delivered over a single-port interface only.

D1 Video* – for uncompressed digital transmission of video signals operating at 270 Mbps. D1 Video is delivered over a single-port or multi-port interface.

Service availability limited. Refer to # footnote on Page 7-158.

7. Special Access Service (Cont'd)

7.2 Service Description (Cont'd)

7.2.19 IntelliBeam Optical Transport Service# (Cont'd)

(C) Service Components (Cont'd)

(5) (Cont'd)

The technical specifications for the protocols transmitted over IOTS optical transport channels are delineated in the following technical publications:

Protocol Transmitted	Technical Publication
SONET OC3, OC12, OC48	GR-253-CORE, Issue 3
SONET OC3c, OC12c, OC48c	GR-253-CORE, Issue 3
SONET OC192, OC192c	GR-253-CORE, Issue 3
10 Gigabit Ethernet WAN-PHY	IEEE 802.3ae with WAN Interface Sublayer
10 Gigabit Ethernet LAN-PHY	IEEE 802.3ae with LAN Interface Sublayer
ESCON®, FICON	IBM Publication SA23-0394-02, Third Edition IBM Publication GA23-0367-04, Fifth Edition ANSI X3.296
ISC	IBM Publication GA2076-00
ISC3	IBM Publication SA23-0395
ETR/CLO	IBM Publication SG24-2070
Fibre Channel	ANSI X3.303
FDDI	ANSI/IEEE X3.802.3u, ANSI X3.166, ANSI X3.148
Fast Ethernet	ANSI/IEEE X3.802.3, X3.802.3z
Gigabit Ethernet	ANSI/IEEE X3.802.3, X3.802.3z
D1 Video	ANSI/SMPTE 259M - 1997

Service availability limited. Refer to # footnote on Page 7-158.

ACCESS SERVICE

7. Special Access Service (Cont'd)

7.2 Service Descriptions (Cont'd)

7.2.19 IntelliBeam Optical Transport Service# (Cont'd)

(C) Service Components (Cont'd)

(6) An example of an IOTS Full Ring is diagrammed below:

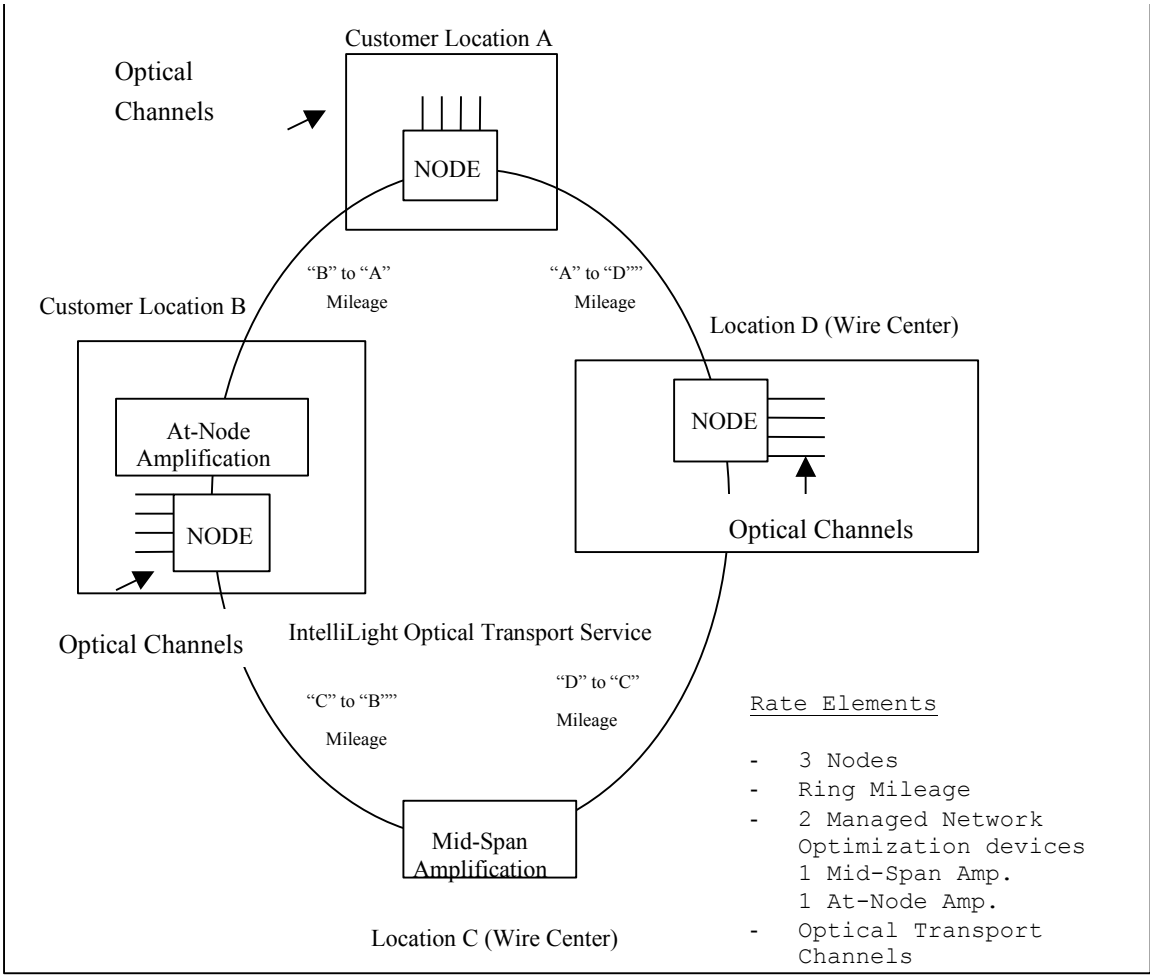

Service availability limited. Refer to # footnote on Page 7-158.

ACCESS SERVICE

7. Special Access Service (Cont'd)

7.2 Service Descriptions (Cont'd)

7.2.19 IntelliBeam Optical Transport Service# (Cont'd)

(C) Service Components (Cont'd)

(7) An example of an IOTS Partial Ring is diagrammed below:

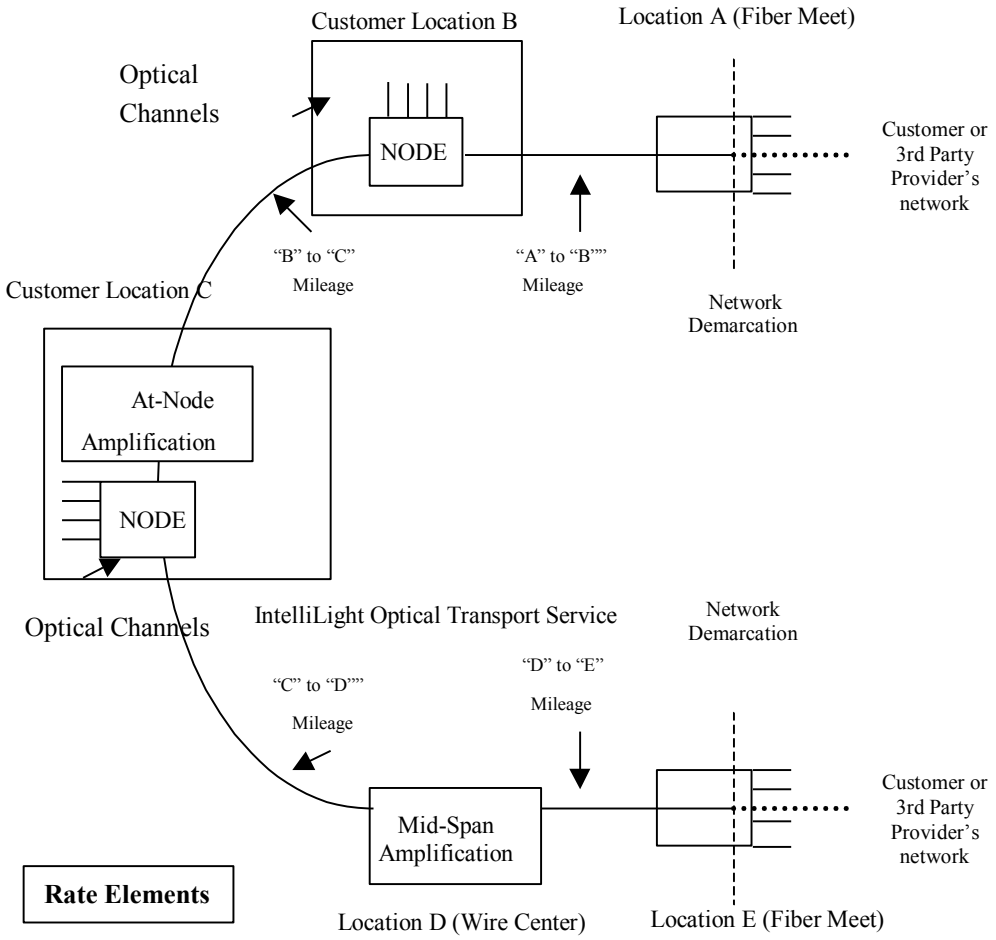

Rate Elements
- Nodes
- Ring Mileage
- Managed Network Optimization Devices

- 2 Fiber Meets (nodes, amps and/or high speed interfaces

-- Optical Transport Channels (point-to-point and point-to-fiber meet)

Service availability limited. Refer to # footnote on Page 7-158.

Vice President, Regulatory
521 East Morehead St., Suite 250, Charlotte, NC 28202

7. Special Access Service (Cont'd)

7.2 Service Description (Cont'd)

7.2.19 IntelliBeam Optical Transport Service# (Cont'd)

(D) Application of Rates and Charges

(1) IOTS is available for 3, 5 and 7 year commitment periods for the nodes, ring mileage, network optimization at-node amplification (subject to (D)(10) following), network optimization mid-span amplification, partial ring high-speed (pass-through) interfaces, and optical transport channels.

(2) Nodes, network optimization mid-span amplification and SONET optical transport channels added subsequent to the initial installation may be coterminous to the expiration date of the IOTS at the rates and charges specified for the term plan on the existing IOTS or may require an extension to the existing plan as follows. If the addition is prior to the 21st month for an existing 3-year plan, prior to the 36th month for an existing 5-year plan, or prior to the 50th month for an existing 7-year plan, the addition will be coterminous to the expiration date of the IOTS. If the addition is after the aforementioned periods, the customer must extend the commitment period of its existing plan for an additional one-year for a 3-year plan, an additional 2-years for a 5-year plan, or an additional 3-years for a 7-year plan.

(3) Effective August 16, 2005, separate rates and charges for network optimization at-node amplification apply subject to (D)(10) following.

(4) IBT and DSR services associated with IOTS are subject to termination liability. Termination liability for IBT is set forth in Section 26.1.5 following. Termination liability for DSR is set forth in Section 34.1 following.

(5) Data optical transport channels added subsequent to the initial installation will be coterminous to the expiration date of the IOTS at the rates and charges specified for the term plan on the existing IOTS. These channels are subject to a minimum service period of three months. Data optical transport channels are described in (C) preceding.

(6) The addition of SONET and/or Data optical transport channels subsequent to the initial installation of service may also require the addition of an expansion node(s) and/or network optimization device(s) to accommodate the increase in channels. The addition of an expansion node or network optimization is subject to the conditions set forth above.

Service availability limited. Refer to # footnote on Page 7-158.

7. Special Access Service (Cont'd)

7.2 Service Description (Cont'd)

7.2.19 IntelliBeam Optical Transport Service# (Cont'd)

(D) Application of Rates and Charges (Cont'd)

(6) Monthly recurring rates apply for the nodes, ring mileage, network optimization mid-span amplification, network optimization at-node amplification subject to (D)(10) following, partial ring high-speed (pass-through) interfaces (certain partial ring configurations only) and optical transport channels. The monthly rate for an optical transport channel applies for the entire point-to-point connection. The monthly rate for a point-to-fiber meet optical transport channel applies for the entire node to fiber meet (collocation arrangement in a CO, customer premises or mutually agreed upon location, as applicable) connection. Once a term period expires, the prevailing rates of the current plan will continue at Category I or Category II rates, as determined in (D)(10) following, until the customer service or requests a new term plan.

(7) The rates and charges for optical transport channels delivered over a single-port or multi-port interface are set forth in Section 31.7.21 following. When the optical transport channel is provided with a multi-port interface, rates and charges apply for the multi-port facility.

(8) Nonrecurring charges for IOTS apply for the initial installation of service and for any subsequent node, network optimization mid-span amplification or optical transport channel that is added at any time after the initial installation of service. A nonrecurring charge also applies to upgrade a 4 channel primary node to a 16 channel primary node or a 4 channel expansion node to a 16 channel expansion node.

(9) Additionally, a Channel Mapping nonrecurring charge as set forth in Section 31.7.21(G) following applies for each channel which the Telephone Company must map over the partial ring. Only channels that originate at and terminate to devices that are not within the partial ring require mapping.

Service availability limited. Refer to # footnote on Page 7-158.

7. Special Access Service (Cont'd)

7.2 Service Description (Cont'd)

7.2.19 IntelliBeam Optical Transport Service# (Cont'd)

(D) Application of Rates and Charges (Cont'd)

(10) Rates and charges for IOTS nodes, ring mileage, network optimization at-node amplification, network optimization mid-span amplification, high speed pass-through interfaces and optical transport channels which are in-service as of, or on order prior to, August 16, 2005 are subject to Category I rates, unless the customer has converted to Category II rates under (c) following.

Rates and charges for IOTS nodes, ring mileage, network optimization mid-span amplification, high speed pass-through interfaces and optical transport channels which are ordered on or after August 16, 2005 are subject to Category II rates. Category II rates also apply to IOTS which are converted from Category I under (c) following.

(a) Category I rates are grandfathered as of August 16, 2005 and apply to each of the following (i) IOTS that is in-service as of, or ordered prior to, August 16, 2005 under this Section 7.2.19 or under Section 6.2.14 preceding, or (ii) each IOTS subscribed under Contract Tariff Option 4, 5, 6, 11, and 14 as set forth in Section 32 following, which is in effect as of August 16, 2005; unless in each case above, the customer elects to convert IOTS billing to Category II rates in accordance with (D)(10)(c) following. Category I rates are subject to separate rates and charges for network optimization at-node amplification.

(b) Category II rates apply to each IOTS which is ordered on or after August 16, 2005 under this Section 7.2.19 or under Section 6.2.14 preceding. Category II rates also apply to nodes, network optimization, mileage, and optical transport channels which are ordered on or after August 16, 2005 as an addition to an existing IOTS, regardless of whether or not such existing IOTS is subject to Category I or Category II rates. When the Telephone Company's network design for such addition to an existing IOTS requires that a network optimization at-node amplifier be added to an existing node that is billed at Category I rates, the billing for such node will be converted to the Category II node rate element, which node rate element includes amplification at the node.

Notwithstanding anything to the contrary in any applicable Contract Tariff Options, any reduction or discount to Special Access rates under Contract Tariff Options 4, 5, 6, 11, or 14 of Section 32 following will not be applied to Category II rates.

Category II rates also apply to IOTS that are converted from Category I rates to Category II rates in accordance with (c) following. Category II rates do not include separate rates and charges for network optimization at-node amplification which is provided as part of the node rate element on or after August 16, 2005.

Service availability limited. Refer to # footnote on Page 7-158.

7. Special Access Service (Cont'd)

7.2 Service Description (Cont'd)

7.2.19 IntelliBeam Optical Transport Service# (Cont'd)

(D) Application of Rates and Charges (Cont'd)

(10) (Cont'd)

(c) A customer subject to Category I rates under (a) preceding may convert to Category II rates subject to the following:

(1) The customer must submit an access order for the conversion to Category II rates.

(2) Separate rates and charges applicable to network optimization at-node amplification under Category I rates shall cease coincident with the date that billing at Category II rates commence.

(3) A new commitment period commences with the conversion from Category I rates to Category II rates. The customer must select a new commitment period from those offered under (D)(1) preceding. The new commitment period must be equal to, or longer than, the original commitment period for the IOTS that was subject to the Category I rates. For example, an IOTS under a 5-year commitment period at Category I rates may only convert to a new 5-year commitment period or a new 7-year commitment period upon conversion to Category II rates.

(4) There can be no physical work activity (e.g., moves, additions, changes) associated with the orders for conversion to Category II rates. Upon conversion, all terms and conditions of this tariff shall apply to the converted IOTS service, including any applicable termination liability and minimum period obligations.

(5) When the conversion is ordered between the period beginning August 16, 2005 and ending November 16, 2005, the conversion will not be subject to minimum period and/or termination liability as they may otherwise apply for early termination of the Category I term plan, provided that the conditions set forth in (1) through (4) preceding are met.

Conversion from Category I rates to Category II rates that is ordered after November 16, 2005 is subject to all minimum period and/or termination liability as they apply for early termination of the Category I term plan. Additionally, conversion to Category II rates ordered after November 16, 2005 is subject to the requirements set forth in (1) through (4) preceding.

Service availability limited. Refer to # footnote on Page 7-158.

7. Special Access Service (Cont'd)

7.2 Service Description (Cont'd)

7.2.19 IntelliBeam Optical Transport Service# (Cont'd)

(D) Application of Rates and Charges (Cont'd)

(11) A change in the type (e.g., Fibre Channel to FICON) or optical carrier rate (e.g., OC3 to OC12) of optical transport channel is treated as a discontinuance of the existing channel and an installation of a new optical transport channel. Optical transport channels ordered on or after August 16, 2005 are provided at Category II rates.

(12) When an optical transport channel is ordered to connect with DSR or IBT, the optical transport channel will be billed to the DSR or IBT customer, as applicable.

(13) When an optical transport channel is delivered over a multi-port interface, the multi-port facility and each multi-port channel riding the multi-port facility must be billed to the same customer who subscribes to the IOTS ring.

(14) When an optical transport channel is ordered to connect to a Telephone Company provided dedicated SONET ring or a Telephone Company provided point-to-point SONET service, the optical transport channel will be billed to the dedicated SONET ring or point-to-point SONET service customer, as applicable.

Service availability limited. Refer to # footnote on Page 7-158.

7. Special Access Service (Cont'd)

7.2 Service Description (Cont'd)

7.2.19 IntelliBeam Optical Transport Service# (Cont'd)

(E) Termination Liability

(1) Termination liability applies to IOTS and is charged per monthly rate element on all nodes, network optimization, partial ring high-speed (pass-through) interfaces, optical transport channels and network management methods. IBT and DSR services associated with IOTS are subject to the termination liability in Sections 26.1.5 and 34.1, respectively. Data optical transport channels as set forth in (C) preceding are not subject to termination liability; however, such channels are subject to a minimum service period of three months.

A separate termination liability charge is assessed for each rate element associated with the disconnected IOTS or a Network Management Method. For example, assume that the customer subscribes to an IOTS ring that is arranged with the Direct TL1 Monitoring Optional Feature, as set forth in 7.2.19(K)(1)(b) following. Further, assume that the customer disconnects the IOTS ring along with the Direct TL1 Monitoring Optional Feature prior to the end of the commitment period. Then, the customer shall pay termination liability on the nodes, network optimization, partial ring high-speed interfaces, optical transport channels and the Direct TL1 Monitoring Optional Feature monthly recurring rate elements as set forth in this section.

(2) IOTS or a Network Management Method may be canceled without termination liability when cancellation of the IOTS or a Network Management Method occurs within thirty (30) days of the effective date of a Telephone Company initiated rate increase of eight percent (8%) or more on any rate applicable to the IOTS service or Network Management Method.

(3) Termination liability will not apply on any IOTS service or Network Management Method (1) if a customer changes its term plan to a longer commitment period; (2) if a 4 channel primary node is upgraded to a 16 channel primary node; (3) if a 4 channel expansion node is upgraded to a 16 channel expansion node; or (4) if a term plan subject to Category I rates is converted to a new term plan subject to Category II rates, when such conversion is ordered in accordance with (D)(10)(c) preceding and is ordered on or before November 16, 2005.

(4) Termination liability will apply when the conditions above are not met and the customer service prior to expiration of the plan period. If the cancellation occurs within the first two years of a term plan, termination liability is equal to 100 percent of the monthly charges for the unexpired portion of the first two years, and 25 percent of the monthly charges for the remainder of the plan. If the customer after the first two years of service, then termination liability is equal to 25 percent of the monthly charges for the remaining life of the term.

Service availability limited. Refer to # footnote on Page 7-158.

7. Special Access Service (Cont'd)

7.2 Service Description (Cont'd)

7.2.19 IntelliBeam Optical Transport Service# (Cont'd)

(E) Termination Liability (Cont'd)

(5) For IntelliBeam Optical Transport Service with a commitment period which was extended under (I) following, termination liability is calculated as the difference between the monthly rates for the highest Term Pricing Plan commitment period that could have been satisfied prior to disconnection of the service or cancellation of the plan and the monthly rates already paid for the expired commitment period and the extended commitment period for the period of time the service was in effect.

(F) Conversions

(1) Customers who wish to move or convert existing Special Access DSR or High Capacity Special Access Services to IOTS may do so without conversion charges (termination liability and installation charges) as long as the total capacity of Special Access service or DSR purchased by the customer does not decrease.

(2) Customers who wish to convert existing IOTS under a term plan with Category I rates to a new term plan with Category II rates may do so without conversion charges (minimum period obligations, termination liability and installation charges) as long as the requirements set forth in (D)(10)(c) preceding are met and is ordered on or before November 16, 2005.

(G) Deployment and Availability

Since IOTS is a dedicated high capacity customized network, it is deployed upon customer request. Where suitable facilities are not generally available, rates and charges as set forth in the Special Construction Section 16, may apply.

IOTS is available based on negotiated intervals as described in 5.2.1(B) preceding.

(H) Shared Use

The regulations applicable to the shared use of IOTS are set forth in Section 5.2.7 preceding. Switched Access IOTS is described in Section 6.2.14 preceding. Shared Use and Switched Access Services are prohibited on IOTS partial ring configurations.

Service availability limited. Refer to # footnote on Page 7-158.

7. Special Access Service (Cont'd)

7.2 Service Description (Cont'd)

7.2.19 IntelliBeam Optical Transport Service# (Cont'd)

(I) Extension of a Commitment Period

(1) The customer has the option, within sixty (60) days prior to the expiration date for its commitment period, to extend its expiring Term Pricing Plan to a plan with a longer commitment period, for which time-in-service credit will be allowed for the expiring plan. The commitment period selected for the extended plan must be longer than the commitment period of the expiring plan as follows:

- An expiring 3-Year Term may be extended to either a 5-Year or 7-Year Term Plan.
- An expiring 5-Year Term may be extended to a 7-Year Term Plan.

(2) Time-in-service credit on the expiring plan will be granted and applied towards the new extended plan. For example, an expiring 3-Year term plan will allow for 3 years of time-in-service credit towards the extended plan.

(3) A Category I term plan that is converted under (D)(10)(c) preceding to a Category II term plan is not eligible for time-in-service credit on the Category II term plan.

(4) The customer may also extend the commitment period in order to install additional nodes, network optimization devices or SONET optical channels as described in (D) preceding.

(5) The rate for the longer commitment period will apply effective with the first bill day following expiration of the commitment period for the existing plan and continue through the remainder of the commitment period associated with the extended plan. No adjustment for the increased discount associated with the extended plan will be made to the monthly rates already billed on the expiring plan.

(6) Extension of a term pricing plan under Category I rates will be extended at Category I rates. However, nodes, network optimization (mid-span and/or at-node amplification), ring mileage and optical transport channels added during the period of extension are subject to Category II rates unless otherwise specified.

(7) Extension of a term pricing plan under Category II rates will be extended at Category II rates.

Service availability limited. Refer to # footnote on Page 7-158.

7. Special Access Service (Cont'd)

7.2 Service Description (Cont'd)

7.2.19 IntelliBeam Optical Transport Service# (Cont'd)

(J) Channel Interface Codes

The following channel interface code is used for the IOTS ring:

CI
02FMF.004 or 02FMF.016

The following channel interface codes are used for channels using wavelengths on the IOTS ring:

Point-to-Point (Full Ring or Partial Ring)
02FCF.10C (FDDI SM 125 Mbps)
02FCF.10D (FDDI MM 125 Mbps)
02FCF.15 (SONET OC3/OC3c)
02FCF.25 (SONET OC48/OC48c)
02FCF.62 (SONET OC12/OC12c)
02SOF.B, D, F (SONET OC192/OC192c)
02FCF.CCS (ESCON®)
02FCF.CTS (ETR/CLO)
02FCF.FC (1.0625 Gbps Fibre Channel)
02OPF.A0+ (2.125 Gbps Fibre Channel)
02FCF.FC1 (133 Mbps Fibre Channel)
02FCF.FC2 (266 Mbps Fibre Channel)
02FCF.FC5 (531 Mbps Fibre Channel)
02FCF.GFM (1 Gbps FICON)
02OPF.A0+ (2 Gbps FICON)
02FCF.GIS (ISC)
02OPF.A0+ (ISC3 at 2.125 Gbps)
02FMF.S (DWDM 4-Port 1.25 Gbps)
02LNF.100 (Fast Ethernet)
02LNF.1GE (Gigabit Ethernet)
02LNF.A0+ (10 Gigabit Ethernet WAN-PHY)
02LNF.A0+ (10 Gigabit Ethernet LAN-PHY)
02TD6.E (D1 Video)

Service availability limited. Refer to # footnote on Page 7-158.

7. Special Access Service (Cont'd)

7.2 Service Description (Cont'd)

7.2.19 IntelliBeam Optical Transport Service# (Cont'd)

(J) Channel Interface Codes (Cont'd)

Point-to-Fiber-Meet (Partial Ring only)
02FCF.10C (FDDI SM 125 Mbps)
02FCF.10D (FDDI MM 125 Mbps)
02FCF.15 (SONET OC3/OC3c)
02FCF.25 (SONET OC48/OC48c)
02FCF.62 (SONET OC12/OC12c)
02SOF.B, D, F (SONET OC192/OC192c)
02FCF.CCS (ESCON®)
02FCF.CTS (ETR/CLO)
02FCF.FC (1.0625 Gbps Fibre Channel)
02LNF.A0+ (2.125 Gbps Fibre Channel)
02FCF.FC1 (133 Mbps Fibre Channel)
02FCF.FC2 (266 Mbps Fibre Channel)
02FCF.FC5 (531 Mbps Fibre Channel)
02FCF.FC (1 Gbps FICON)
02LNF.A0+ (2 Gbps FICON)
02FCF.GIS (ISC)
02LNF.A0+ (ISC3 at 2.125 Gbps)
02FMF.S (DWDM 4-Port 1.25 Gbps)
02LNF.100 (Fast Ethernet)
02LNF.1GE (Gigabit Ethernet)
02LNF.A0+ (10 Gigabit Ethernet WAN-PHY)
02LNF.A0+ (10 Gigabit Ethernet LAN-PHY)
02TD6.E (D1 Video)

Service availability limited. Refer to # footnote on Page 7-158.

7. Special Access Service (Cont'd)

7.2 Service Description (Cont'd)

7.2.19 IntelliBeam Optical Transport Service# (Cont'd)

(K) Network Management Methods

The customer has the option of purchasing one of the following Network Management Methods for use with an IOTS Special Access service provided by the Telephone Company in accordance with this Section 7.2.19. Only one method may be provided on a single IOTS. Network Management Methods will be available subject to compatibility of the current release of the Network Management Methods software with the IOTS equipment deployed for the customer's network.

- Customer Service Management Optional Feature, as set forth in 7.2.19(K)(1)(a) following
- Direct TL1 Monitoring Optional Feature, as set forth in 7.2.19(K)(1)(b) following

(1) Customer Service Management Optional Feature (CSM)

(a) Description

CSM provides a customer with real-time information about the operational status of its IOTS network. CSM provides a network view of real-time detection and reporting of network alarm conditions within the customer's IOTS network. In addition, CSM provides the customer with the ability to generate basic network performance reports for its IOTS network. The customer may also request network performance reports that are customized to meet their specific needs.

(b) Application of Rates and Charges

(i) A CSM monthly recurring charge applies, per full or partial ring, for each IOTS provided with the CSM optional feature.
(ii) A Node Setup charge applies, per primary or expansion node, for each node that is equipped with CSM at the time that CSM is initially established on the IOTS.
(iii) An Initial CSM Setup charge applies for establishment of the customer's initial CSM database partition. The initial CSM database partition includes setup for up to six (6) users.

Service availability limited. Refer to # footnote on Page 7-158.

7. Special Access Service (Cont'd)

7.2 Service Description (Cont'd)

7.2.19 IntelliBeam Optical Transport Service# (Cont'd)

(K) Network Management Methods (Cont'd)

(1) Customer Service Management Optional Feature (CSM) (Cont'd)

(b) Application of Rates and Charges (Cont'd)

(iv) A Setup of Additional Users charge applies for the setup of up to six (6) additional users beyond those users included with the setup of initial or additional database partitions.

(v) A Setup of Additional Partition charge applies for the setup of an additional CSM database partition created for the same customer. Each additional CSM database partition provides for the setup of up to six (6) additional users.

(vi) An Add/Remove Node charge applies, per primary and expansion node, for each node that is added to, or removed from, an IOTS ring equipped with CSM subsequent to the initial establishment of CSM.

(vii) A Consultation and Support charge applies for each thirty (30) minutes or fraction thereof that the customer requests Telephone Company consultation and support of its CSM network. This charge does not apply during initial setup of CSM.

(viii) A Change in Network Management Method charge applies, per primary and expansion node, when the customer requests a change in Network Management Method (e.g., from CSM to DTM).

(c) Rate Regulations

(i) CSM is provided under a term plan of 3 years, 5 years or 7 years, as described following.

- The duration of the term plan for CSM must be the same duration as the term plan for the IOTS nodes provided with CSM. At the expiration of its 3, 5 or 7 year term plans for CSM, the customer has the option of extending CSM with a coterminous end date as described following.

Service availability limited. Refer to # footnote on Page 7-158.

7. Special Access Service (Cont'd)

7.2 Service Description (Cont'd)

7.2.19 IntelliBeam Optical Transport Service# (Cont'd)

(K) Network Management Methods (Cont'd)

(1) Customer Service Management Optional Feature (CSM) (Cont'd)

(c) Rate Regulations (Cont'd)

(i) (Cont'd)

- The expiration date of each CSM added subsequent to the initial installation must be coterminous to the expiration date of the associated IOTS, provided the addition is prior to the 21st month for a 3-year plan, prior to the 36th month for a 5-year plan, or prior to the 50th month for a 7-year plan. A CSM added after the aforementioned periods requires extension of the commitment period for the associated IOTS in accordance with 7.2.19(I) preceding. Such extension results in the establishment of a new plan that includes both the IOTS and the CSM under the same plan with the same expiration date.

(ii) The customer may retrieve basic reports containing performance-monitoring information on its IOTS network. Basic reports are available at no additional charge to the customer. The customer may also request that a report be customized to meet its particular needs. Rates and charges for customized reports are provided on an individual case basis (ICB) only.

(iii) CSM is subject to termination liability if the service is disconnected prior to completion of the existing commitment period. The terms and conditions in 7.2.19(E) preceding apply to termination of CSM prior to completion of the existing commitment period. Changes in Network Management Method (e.g., from CSM to DTM) will be made without termination liability subject to the Change in Network Management Method charge set forth in (1)(b)(viii) preceding.

Service availability limited. Refer to # footnote on Page 7-158.

7. Special Access Service (Cont'd)

7.2 Service Description (Cont'd)

7.2.19 IntelliBeam Optical Transport Service# (Cont'd)

(K) Network Management Methods (Cont'd)

(1) Customer Service Management Optional Feature (CSM) (Cont'd)

(d) Terms and Conditions

(i) The customer must utilize Internet web access to connect its customer-provided terminal equipment to the Telephone Company's CSM management system. Access to the internet and any associated rates and charges are the responsibility of the customer. The customer is also responsible for obtaining communications software that is compatible with the software the Telephone Company utilizes to provide CSM. The Telephone Company will work cooperatively with the customer to determine compatibility of its communications software.

(ii) CSM is provided only when the Telephone Company provides all nodes on the ring.

(iii) Subject to the restrictions set forth in 7.2.19(K)(1)(c)(i) preceding, CSM is provided coincident with the installation of the associated IOTS ring or may be added to an existing ring.

(2) Direct TL1 Monitoring Optional Feature (DTM)

(a) Description

DTM provides a customer with near real-time information about the operational status of its IOTS network over a TL1 connection. A TL1 connection is a machine-to-machine communication language protocol. The connection allows a customer to monitor its IOTS network via a limited set of executable TL1 commands in order to query alarm and performance criteria.

Service availability limited. Refer to # footnote on Page 7-158.

7. Special Access Service (Cont'd)

7.2 Service Description (Cont'd)

7.2.19 IntelliBeam Optical Transport Service# (Cont'd)

(K) Network Management Methods (Cont'd)

(2) Direct TL1 Monitoring Optional Feature (DTM) (Cont'd)

(a) Description (Cont'd)

(i) DTM enables the following:

- Near real-time access to system-generated alarm and performance messages originating from the customer's IOTS network elements.
- Query and response capability that enables two-way communications with the capability to poll and retrieve messages, such as command alarms and performance messages.
- Access to ring inventory information that will enable the customer to maintain its own inventory database containing network element configurations and usage records for active service channels.
- Notification that a power failure has occurred at an IOTS network element and that the affected network element has reverted to battery backup.
- Ability to monitor the ring, as well as all service channels riding the ring.

(b) Application of Rates and Charges

(i) A DTM monthly recurring charge applies, per full or partial ring, for each IOTS provided with the DTM optional feature.

(ii) A Node Setup charge applies, per primary or expansion node, for each node that is equipped with DTM at the time that DTM is initially established on the IOTS.

(iii) A DTM Setup charge applies for establishment of the customer's DTM database partition.

Service availability limited. Refer to # footnote on Page 7-158.

7. Special Access Service (Cont'd)

7.2 Service Description (Cont'd)

7.2.19 IntelliBeam Optical Transport Service# (Cont'd)

(K) Network Management Methods (Cont'd)

(2) Direct TL1 Monitoring Optional Feature (DTM) (Cont'd)

(b) Application of Rates and Charges (Cont'd)

(iv) An Add/Remove Node charge applies, per primary and expansion node, for each node that is added to, or removed from, an IOTS ring equipped with DTM subsequent to the initial establishment of DTM.

(v) A Consultation and Support charge applies for each thirty (30) minutes or fraction thereof that the customer requests Telephone Company consultation and support of its DTM network. This charge does not apply during initial setup of DTM.

(vi) A Change in Network Management Method charge applies, per primary and expansion node, when the customer requests a change in Network Management Method (e.g., from DTM to CSM).

(c) Rate Regulations

(i) DTM is provided under a term plan of 3 years, 5 years or 7 years, as described following.

- The duration of the term plan for DTM must be the same duration as the term plan for the IOTS nodes provided with DTM. At the expiration of its 3, 5 or 7 year term plans for DTM, the customer has the option of extending DTM with a coterminous end date as described following.

- The expiration date of each DTM added subsequent to the initial installation must be coterminous to the expiration date of the associated IOTS, provided the addition is prior to the 21st month for a 3-year plan, prior to the 36th month for a 5-year plan, or prior to the 50th month for a 7-year plan. A DTM added after the aforementioned periods requires extension of the commitment period for the associated IOTS in accordance with 7.2.19(I) preceding. Such extension results in the establishment of a new plan that includes both the IOTS and the DTM under the same plan with the same expiration date.

Service availability limited. Refer to # footnote on Page 7-158.

7. Special Access Service (Cont'd)

7.2 Service Description (Cont'd)

7.2.19 IntelliBeam Optical Transport Service# (Cont'd)

(K) Network Management Methods (Cont'd)

(2) Direct TL1 Monitoring Optional Feature (DTM) (Cont'd)

(c) Rate Regulations (Cont'd)

(ii) Termination liability will apply if DTM is removed prior to completion of the existing commitment period. The terms and conditions in 7.2.19(E) preceding apply to termination of DTM prior to completion of the existing commitment period. Changes in Network Management Method (e.g., from DTM to CSM) will be made without termination liability subject to the Change in Network Management Method charge set forth in (2)(b)(vi) preceding.

(d) Terms and Conditions

(i) The customer must order two (2) special access services, provided by the Telephone Company under this Section 7 or provided by another carrier, in order to ensure secure, dedicated private line access and enable full redundancy for DTM. These special access lines must originate at the customer's designated premises and terminate at a DTM site designated by the Telephone Company with the terms and conditions of this tariff. The customer is responsible for procuring any additional services that may be necessary to connect the special access service to the customer's designated premises.

(ii) When requested by the customer, and where technically feasible to do so, the Telephone Company will provide encryption capabilities on the Special Access Services used to access DTM. The Telephone Company will specify any equipment or software required to provide encryption. Obtaining such equipment or software is the responsibility of the customer. The customer is also responsible for:

- security of any equipment, servers, systems or other facilities provided by the customer and which have access to the DTM network; and
- monitoring access to the DTM service using the facilities, systems, equipment or servers provided by the customers.

(iii) DTM is only provided when the Telephone Company provides all the nodes on the ring.

Service availability limited. Refer to # footnote on Page 7-158.

7. Special Access Service (Cont'd)

7.2 Service Description (Cont'd)

7.2.20 Bonded Digital Link Service

(A) Service Description

Bonded Digital Link Service provides connecting channels for the transmission of voice or data between an end user's local exchange service terminating at a digital cross connect facility and a special access service provided by the Telephone Company within the same wire center or at another wire center within the same LATA.

Bonded Digital Link Service is comprised of Intra-office channels (channels within a single wire center) or Inter-office channels (channels between two wire centers) connecting the wire centers of the locations involved. The minimum transmission rate for the service is 64 kbps in a DS0 channel. The Telephone Company will provide for the transmission of DS0 channels within a DS1 signal of the customer's (the end user) associated local exchange service from the digital cross connect facility in the customer's wire center to a 64 kbps channel of a customer's DS1 to DS0 central office multiplexing arrangement within the same wire center or in a different wire center. The total number of DS0s on a Bonded Digital Link Service channel may not exceed the total capacity of the DS1 or equivalent service to which it is connected.

At the customer's option, the Telephone Company will bond contiguous DS0 channels in order to provide higher data rates. The following data rates are available:

- 64 kbps; 1 DS0 equivalent channel
- 256 kbps; 4 bonded DS0 equivalent channels
- 384 kbps; 6 bonded DS0 equivalent channels
- 512 kbps; 8 bonded DS0 equivalent channels
- 768 kbps; 12 bonded DS0 equivalent channels

For the transmission of the Bonded Digital Link Service channels, the Telephone Company assumes responsibility for the routing of the customer's DS0 circuits and for the bonded DS0 circuits over the Telephone Company's interoffice network in order to maximize network efficiencies and to optimize economic efficiencies.

7. Special Access Service (Cont'd)

7.2 Service Description (Cont'd)

7.2.20 Bonded Digital Link Service (Cont'd)

(B) Terms and Conditions

(1) Bonded Digital Link Service is available within or between wire centers where suitable digital cross-connect (hubbing) technology exists to perform DS1 to DS0 multiplexing functions. Those locations (wire centers) are set forth in NATIONAL EXCHANGE CARRIER ASSOCIATION, INC. TARIFF F.C.C. NO. 4.

(2) The service may only be used for connection from a wire center with a digital hubbing arrangement to a DS1 special access service capable of assignment to compatible DS0 channels. The customer or its authorized representatives must designate the DS0 channels on the special access service connected to this service. Data rates above 64 kbps require contiguous DS0 channel assignments. Connection to services other than special access service is prohibited.

(3) Bonded Digital Link Service is provided with a one-year minimum service period. If service is disconnected prior to satisfying the minimum service period (i.e., within the first twelve months), minimum period charges apply. The minimum one-year service period and minimum period charges do not apply if the rates have increased during the one-year period. The minimum period charge is equal to 100 % of the monthly rate from the date of disconnection through the balance of the first twelve months of service.

(4) This service is used for connectivity within or between wire centers. The rates and charges for Bonded Digital Link Service apply as a flat rate per DS0 equivalent channel.

(5) Credit for an interruption of Bonded Digital Link Service is subject to the basic credit allowance set forth for Special Access services as set forth in Section 2.8.1.1 preceding.

(6) Bonded Digital Link Service is provided with a negotiated interval as set forth in Section 5.2.1(B) preceding.

(7) The rates and charges for Bonded Digital Link Service apply per DS0 equivalent (64 kbps). The customer is assessed either an Intra-office or an Inter-office Channel Charge for each DS0. Rates and charges are set forth in 31.7.22 following.

7. Special Access Service (Cont'd)

7.2 Service Description (Cont'd)

7.2.21 Optical Network#

(A) General

(1) Optical Network service provides managed optical transport of data signals of various speeds over the Telephone Company's shared network. Optical Network architecture allows for point-to-point transmissions of varying bandwidths between customer designated premises or between a customer designated location and a collocation arrangement where a customer is provided Expanded Interconnection as described in Section 28 following.

(2) Optical Network is provided where Telephone Company fiber optic facilities and equipment with sufficient bandwidth capacity permit.

(B) Service Description

(1) Optical Network service consists of 3 components, an On-Net Channel Extension, an On-Net Channel Mileage, and an Access Aggregation Port.

(a) On-Net Channel Extension provides the communications path and interface termination from a customer's premises to the serving wire center or between the customer premises and serving wire center where the customer has Expanded Interconnection Service pursuant to Section 28 following. The On-Net Channel Extension utilizes an optical network element at the customer-designated premises.

Effective March 30, 2007, orders for Optical Network are no longer permitted. The Telephone Company will continue to provide Optical Network pursuant to this Section 7.2.16 on any existing Optical Network that is in-service as of March 30, 2007, or any order for Optical Network that is placed with the Telephone Company prior to March 29, 2007 (collectively, Existing Optical Network), subject to the following conditions:

a. For any Existing Optical Network that is currently subscribed to a term plan (i.e., commitment periods of 1-, 3-, 5-, and 7-years), the Telephone Company will continue to provide the Existing Optical Network for an additional six (6) months beyond the expiration date of the customer's current commitment period, or until the customer replaces the Existing Optical Network with a comparable Telephone Company provided service, or discontinues service, whichever comes first. Effective March 30, 2007, moves, additions and/or changes are not permitted.

b. For any Existing Optical Network whose term plan expired prior to March 30, 2007, but the Existing Optical Network continued on a month-to-month basis at prevailing rates, the Telephone Company will continue to provide the Existing Optical Network until September 30, 2007, or until the customer replaces the Existing Optical Network with a comparable Telephone Company provided service, or discontinues service, whichever comes first. Effective March 30, 2007, moves, additions and/or changes are not permitted.

7. Special Access Service (Cont'd)

7.2 Service Description (Cont'd)

7.2.21 Optical Network# (Cont'd)

(B) Service Description (Cont'd)

(1) Optical Network service consists of 3 components, an On-Net Channel Extension, an On-Net Channel Mileage, and an Access Aggregation Port.

(a) On-Net Channel Extension provides the communications path and interface termination from a customer's premises to the serving wire center or between the customer premises and serving wire center where the customer has Expanded Interconnection Service pursuant to Section 28 following. The On-Net Channel Extension utilizes an optical network element at the customer-designated premises.

(b) On-Net Channel Mileage provides transport between two Telephone Company Serving Wire Centers (SWCs). On-Net Channel Mileage is measured in airline miles between the SWCs involved.

(c) Access Aggregation Ports support multiple Ethernet, Fibre Channel, and/or FiCON signals(s) that are mapped into SONET at one end of the channel.

(2) Optical Network On-Net Channel Extensions may be available as protected or unprotected.

(a) For protected services, the Telephone Company will provision the service over diversely routed, self-healing architecture. Protected services allow for a near 100% availability and restoration in the event of a network failure.

(b) For unprotected services, the Telephone Company does not guarantee the service will be provisioned over diversely routed facilities.

Service availability limited. Refer to # footnote on Page 7-192.

7. Special Access Service (Cont'd)

7.2 Service Description (Cont'd)

7.2.21 Optical Network# (Cont'd)

(B) Service Description (Cont'd)

(3) Channel Interfaces

The following demonstrates the number of STS1s and Access Aggregation Ports that are required for each Optical Network Mapped Interfaces.

SONET Mappings & Ports

SONET Mapped Interface	STS1s	Access Aggregation Port
100 Mbps Ethernet (50Mb) Mapped to STS1	1 - STS1	OC3, OC12, OC48
100 Mbps Ethernet (Full Rate) Mapped to OC3c	3 - STS1s	OC12, OC48
1 Gbps Ethernet (50Mb) Mapped to OC3	1 - STS1	OC3, OC12, OC48
1 Gbps Ethernet (150Mb) Mapped to OC3	3 - STS1s	OC12, OC48
1 Gbps Ethernet (300Mb) Mapped to OC12	6 - STS1s	OC12, OC48
1 Gbps Ethernet (450Mb) Mapped to OC12	9 - STS1s	OC12, OC48
1 Gbps Ethernet (600Mb) Mapped to OC12	12 - STS1s	OC48
1 Gbps Ethernet (Full Rate) Mapped to OC48	21 - STS1s	OC48
1 Gbps Fibre Channel (Full Rate) Mapped to OC48	19 - STS1s	OC48
1 Gbps FiCON (Full Rate) Mapped to OC48	19 - STS1s	OC48
Aggregation Ports	Total STS1s	
OC3 Port - Supports Up to 3 Total Mapped STS1s	3 - Total STS1s	N/A
OC12 Port - Supports Up to 12 Mapped STS1s	12 - Total STS1s	N/A
OC48 Port - Supports Up to 48 Mapped STS1s	48 - Total STS1s	N/A

Service availability limited. Refer to # footnote on Page 7-192.

7. Special Access Service (Cont'd)

7.2 Service Description (Cont'd)

7.2.21 Optical Network# (Cont'd)

(B) Service Description (Cont'd)

(4) The Access Aggregation Port will only be permitted at a customer designated premises. The Access Aggregation Port is not available to an Expanded Interconnection location.

(a) This port must utilize a SONET interface (i.e., OC3, OC12, OC48) at the point of demarcation at the customer designated premises. An Access Aggregation Port can only reside at one end of a Optical Network circuit. The end of a Optical Network circuit that is not assigned to an Access Aggregation Port must have a native Ethernet hand-off.

(5) Optical Network service transmissions are provided in the following protocols/data interfaces:

- Ethernet: transmits Ethernet at 10 Mbps
- Fast Ethernet: transmits at 100 Mbps
- Gigabit Ethernet: transmits at 1 Gbps
- Ethernet Mapped to STS1
- Fast Ethernet Mapped to STS1
- Fast Ethernet Mapped to OC3c
- Gigabit Ethernet Mapped to OC3
- Gigabit Ethernet Mapped to OC12
- Gigabit Ethernet Mapped to OC12c
- Gigabit Ethernet Mapped to OC48
- Gigabit Fibre Channel Mapped to OC48
- Gigabit FiCON Mapped to OC48
- Optical Network Services Mapped to OC3 Access Aggregation Port
- Optical Network Services Mapped to OC12 Access Aggregation Port
- Optical Network Services Mapped to OC48 Access Aggregation Port

Service availability limited. Refer to # footnote on Page 7-192.

7. Special Access Service (Cont'd)

7.2 Service Description (Cont'd)

7.2.21 Optical Network# (Cont'd)

(B) Service Description (Cont'd)

(6) Optical Network services may connect to other Telephone Company services capable of transmitting the specified protocol.

(a) A Optical Network Ethernet mapped to STS1; Fast Ethernet mapped to STS1 and/or OC3c; Gigabit Ethernet mapped to OC3, OC12, OC12c and/or OC48 service may be multiplexed onto a port on a higher speed node of a DSR service for transport over the higher bit rate DSR.

(b) A Optical Network Ethernet mapped to STS1; Fast Ethernet mapped to OC3c; and/or Gigabit Ethernet mapped to OC12c service may be multiplexed on to an IBT service of higher bit rate for transport.

(c) A Optical Network Ethernet mapped to STS1; Fast Ethernet mapped to STS1 and/or OC3c; Gigabit Ethernet mapped to OC3, OC12 and/or OC12c service may be connected to an equal speed service of an IntelliBeam Entrance Facility (IEF).

(d) A Optical Network Fast Ethernet mapped to OC3c and/or Gigabit Ethernet mapped to OC12c service may connect to an equal speed Optical Transport Channel of an IntelliBeam Optical Transport Service (IOTS) at a node on the IOTS ring.

(e) A Optical Network Gigabit 50, 150, 300, 450, or 600 Mbps Partial Rate and/or Full Rate Ethernet service may be multiplexed onto a GigE port on a higher speed Enhanced Node of a DSR service for transport over the higher bit rate DSR at an equivalent speed GigE.

(f) A Optical Network Gigabit Full Rate Ethernet service may be connected to Gigabit Ethernet Optical Transport Channel of an IntelliBeam Optical Transport Service (IOTS) at a node on the IOTS ring.

(g) Reserved

(h) A Optical Network Gigabit Fibre Channel and/or Gigabit FiCON service may be connected to a Gigabit Fibre Channel and/or Gigabit FiCON Optical Transport Channel via a node on an IntelliBeam Optical Transport Service (IOTS) ring.

(i) Gigabit 50, 150, 300, 450, or 600 Mbps Partial Rate and/or Full Rate Ethernet service may connect where a customer has an Expanded Interconnection arrangement pursuant to Section 28 following.

Service availability limited. Refer to # footnote on Page 7-192.

7. Special Access Service (Cont'd)

7.2 Service Description (Cont'd)

7.2.21 Optical Network# (Cont'd)

(B) Service Description (Cont'd)

(6) (Cont'd)

(j) A Optical Network Full Rate Gigabit Ethernet service may connect, as native Ethernet to native Ethernet only, from a customer designated location to a wire center where connection to a TransConnect LAN Service (TLS) Network-to-Network Interface (NNI) Port Only Connection occurs. An Ethernet-to-SONET mapped option is not available on any Optical Network circuit which connects to a TLS NNI Port Only Connection.

(k) A Optical Network Full Rate Gigabit Ethernet service may connect, as native Ethernet to native Ethernet only, from an Expanded Interconnection arrangement, as set forth in Section 28 following, to another wire center (i.e., other than the wire center where the Expanded Interconnection arrangement is provided) where connection to a TLS NNI Port Only Connection occurs. An Ethernet-to-SONET mapped option is not available on any Optical Network circuit which connects to a TLS NNI Port Only Connection.

(l) Reserved

Service availability limited. Refer to # footnote on Page 7-192.

7. Special Access Service (Cont'd)

7.2 Service Description (Cont'd)

7.2.21 Optical Network# (Cont'd)

(B) Service Description (Cont'd)

(6) (Cont'd)

(m) Optical Network may also be connected to the following Telephone Company provided services, where such connections are technically and operationally feasible, as determined by the Telephone Company.

- dedicated SONET ring service
- point-to-point SONET service
- optical hubbing service
- DWDM ring service
- SONET entrance facility service
- switched ethernet service

Service availability limited. Refer to # footnote on Page 7-192.

7. Special Access Service (Cont'd)

7.2 Service Description (Cont'd)

7.2.21 Optical Network# (Cont'd)

(C) Technical Specifications

The technical specifications for the protocols transmitted over Optical Network are delineated in the following technical publications:

Protocol	Publication
SONET	GR-253-CORE, Issue 3
10 Mbps Ethernet	ANSI/IEEE X3.802.3
100 Mbps Fast Ethernet	ANSI/IEEE X3.802.3u
1 Gbps Ethernet	ANSI/IEEE X3.802.3z
1 Gbps Gigabit Fibre Channel	ANSI/IEEE X3.303
1 Gbps Gigabit FiCON	ANSI/IEEE X3.296

(D) Terms and Conditions

(1) A planning session is required prior to the submission of an order for Optical Network. Optical Network is available based on negotiated intervals as described in Section 5.2.1 preceding.

(2) Where distance limitations affect the Telephone Company's ability to engineer end-to-end transport of some protocols, the Telephone Company will notify the customer that it cannot provide the requested service.

(3) All signals generated by the customer's equipment (CPE/customer provided equipment) must meet industry standards and specifications. See (C) of this section preceding.

(4) The customer is responsible to ensure that its equipment meets any applicable technical requirements or limitations for the protocol being transmitted.

(5) The customer is responsible for any error detection and error correction of the data generated by its equipment.

(6) The Telephone company assumes no responsibility for the quality of the signal generated by CPE and will deliver the signal in the format provided by the customer.

Service availability limited. Refer to # footnote on Page 7-192.

7. Special Access Service (Cont'd)

7.2 Service Description (Cont'd)

7.2.21 Optical Network# (Cont'd)

(D) Terms and Conditions (Cont'd)

(7) When requested by the customer, one or more Optical Network Ethernet, Fast Ethernet, Gigabit Ethernet, Gigabit Fibre Channel, and/or FiCON signal(s) may be mapped into a SONET signal. The options for mapping a single signal are:

(a) The options for mapping a single signal are:

- 10 Mbps Ethernet to STS1
- 100 Mbps Fast Ethernet to STS1 and/or OC3c
- 1 Gbps Gigabit Ethernet to OC3, OC12, OC12c, and/or OC48
- 1 Gbps Fibre Channel to OC48
- 1 Gbps FiCON to OC48

(b) The options for mapping multiple signals are:

- 10 Mbps Ethernet to OC3, OC12, and/or OC48
- 100 Mbps Fast Ethernet to OC3, OC12, and/or OC48
- 1 Gbps Gigabit Ethernet to OC3, OC12, and/or OC48
- 1 Gbps Fibre Channel to OC48
- 1 Gbps FiCON to OC48

(c) Only one end of a Optical Network channel may be Ethernet-to-SONET mapped. The mapping of multiple signals requires placement of a Optical Network Access Aggregation Port as described in (B)(4) preceding.

(d) An Ethernet-to-SONET mapped option is not available on any Optical Network circuit which connects to an Expanded Interconnection arrangement pursuant to Section 28 following. A Optical Network circuit which connects to an Expanded Interconnection arrangement is not allowed to connect to any other Telephone Company service. When a Optical Network circuit connects to an Expanded Interconnection arrangement, no additional Channel Extension charges apply as a result of the connection to the Expanded Interconnection arrangement. When Optical Network connects to an Expanded Interconnection arrangement, the Optical Network circuit will be cross-connected to the Expanded Interconnection arrangement, and all rates and charges for such Expanded Interconnection arrangement as set forth in Section 28 following shall apply in addition to any charges for Optical Network.

(e) The Aggregation port option is not available where cross-connection to an Expanded Interconnection arrangement occurs.

Service availability limited. Refer to # footnote on Page 7-192.

7. Special Access Service (Cont'd)

7.2 Service Description (Cont'd)

7.2.21 Optical Network# (Cont'd)

(D) Terms and Conditions (Cont'd)

(8) Where facilities, conditions, and/or sufficient bandwidth capacity permit, the Telephone Company, upon customer request, may provide a diverse fiber path between the customer designated premises and its Serving Wire Center. Rates and charges may apply as specified in the Special Construction tariff.

(E) Rate Regulations

(1) Optical Network is available for 1, 3, 5, and 7-year commitment periods/term plans.

(2) The minimum service period for Optical Network is one year.

(3) Upon expiration of a commitment period, the customer may choose to continue service under a new commitment period or cancel service. If the customer does not choose one of these options, the Telephone Company will continue the service at the monthly rate for the 1st Original commitment period.

Service availability limited. Refer to # footnote on Page 7-192.

7. Special Access Service (Cont'd)

7.2 Service Description (Cont'd)

7.2.21 Optical Network# (Cont'd)

(E) Rate Regulations (Cont'd)

(4) The customer has the option, within sixty (60) days prior to the expiration date for its commitment period, to extend its expiring Plan to a longer commitment period, for which time-in-service credit will be allowed for the expiring plan. The commitment period selected for the extended plan must be longer that the commitment period of the expiring plan, e.g., an expiring 1-Year Term may be extended to either a 3-Year, 5-Year, or 7-Year Commitment period. Time-in-service credit lessens the actual time commitment for the extended plan. For example, Time in Service Credit for an expiring 3-Year term plan applied toward a new 7-year plan equals a new commitment period of 4 years at the 7-year plan rate. The rate for the longer commitment period will apply effective with the first bill day following expiration of the commitment period for the existing plan and continue through the remainder of the commitment period associated with the extended plan. No adjustment for the increased discount associated with the extended plan will be made to the monthly rates already billed on the expiring plan.

(5) A change in protocol of an On-Net Channel Extension is treated as a discontinuance of service and an installation of both, a new On-Net Channel Extension and the appropriate On-Net Channel Mileage, and will result in termination liability charges applied for the discontinuance of the existing service.

(6) Monthly recurring charges (MRCs) apply for On-Net Channel Extensions, On-Net Channel Mileage, and Access Aggregation Ports.

(7) The MRC for the Channel Extension applies per channel extension and at the specified term plan rate. The On-Net Channel Extension charge is also dependent on the type of facility interface provided.

(8) The MRC for the Channel Mileage applies on a per mile basis for the airline miles between the Serving Wire Centers. When the mileage calculation results in a fraction of a mile, it is rounded up to the next whole mile.

Service availability limited. Refer to # footnote on Page 7-192.

7. Special Access Service (Cont'd)

7.2 Service Description (Cont'd)

7.2.21 Optical Network# (Cont'd)

(E) Rate Regulations (Cont'd)

(9) The MRC for the Access Aggregation Port applies per port and at the specified term plan rate. The Access Aggregation Port charge is also dependent on the type of facility interface provided.

(10) Nonrecurring charges (NRCs) apply for the initial installation of On-Net Channel Extensions and Access Aggregation Ports.

(11) When connecting Optical Network services to other Telephone Company provided services, the rates and charges, and terms and conditions of the connecting services also apply.

(12) The MRCs and NRCs for Optical Network are listed in Section 31.7.23.

(13) When connecting a Optical Network circuit to an Expanded Interconnection arrangement pursuant to Section 28 following, the MRC for the Channel Extension that provides the communications path and interface termination from a customer's premises to the serving wire center will apply at the specified term plan rate, as set forth in Section 30.7.23 following for Price Band rates and charges and Section 31.7.23 following for all other rates and charges. The customer shall also be charged an MRC for the Channel Mileage at the specified term plan rate on a fixed and on a per mile basis for the airline miles between the Serving Wire Centers, if applicable. In addition to charges described herein, any other charges associated with connecting Optical Network to an Expanded Interconnection arrangement are described in Section 28 following.

(14) When a Optical Network circuit is ordered from a customer designated premises to a wire center where connection to a TLS NNI Port Only Connection occurs, as set forth in Section 7.2.20(B)(6)(j) preceding, the Channel Extension rate element at the customer designated premises will apply at the specified term plan rate, as set forth in Section 30.7.23 following for Price Band rates and charges and Section 31.7.23 following for all other rates and charges. The NNI Port Only Connection rate element will apply in lieu of the Channel Extension rate element at the TLS end of the service. The customer shall also be charged Optical Network Channel Mileage at the specified term plan rate on a fixed and on a per mile basis for the airline miles between the serving wire centers, if applicable.

Service availability limited. Refer to # footnote on Page 7-192.

7. Special Access Service (Cont'd)

7.2 Service Description (Cont'd)

7.2.21 Optical Network# (Cont'd)

(E) Rate Regulations (Cont'd)

(15) When a Optical Network circuit is ordered to connect an Expanded Interconnection arrangement pursuant to Section 28 following and a TLS NNI Port Only Connection in another wire center, as set forth in Section 7.2.20(B)(6)(k) preceding, the Channel Extension rate element will not apply at the Expanded Interconnection arrangement end of the service. The NNI Port Only Connection rate element will apply in lieu of the Channel Extension rate element at the TLS end of the service. The customer shall also be charged Optical Network Channel Mileage at the specified term plan rate on a fixed and on a per mile basis for the airline miles between the serving wire centers. In addition to charges described herein, any other charges associated with connecting Optical Network to an Expanded Interconnection arrangement are described in Section 28 following.

(16) When a Optical Network circuit is ordered from a customer designated premises to a wire center where connection to a Telephone Company provided switched ethernet service network-to-network interface port only connection occurs, the Channel Extension rate element at the customer designated premises will apply. The switched ethernet service network-to-network interface port only connection rate element will apply in lieu of the Channel Extension rate element at the switched ethernet service end of the service. The customer shall also be charged Optical Network Channel Mileage at the specified term plan rate on a fixed and on a per mile basis for the airline miles between the Serving Wire Centers, if applicable.

(17) When a Optical Network circuit is ordered to connect an Expanded Interconnection arrangement pursuant to Section 28 following and a Telephone Company provided switched ethernet service network-to-network interface port only connection in another wire center, the Channel Extension rate element will not apply at the Expanded Interconnection arrangement end of the service. The switched ethernet service network-to-network interface port only connection rate element will apply in lieu of the Channel Extension rate element at the switched ethernet service end of the service. The customer shall also be charged Optical Network Channel Mileage at the specified term plan rate on a fixed and on a per mile basis for the airline miles between the serving wire centers. In addition to charges described herein, any other charges associated with connecting Optical Network to an Expanded Interconnection arrangement are described in Section 28 following.

Service availability limited. Refer to # footnote on Page 7-192.

7. Special Access Service (Cont'd)

7.2 Service Description (Cont'd)

7.2.21 Optical Network# (Cont'd)

(F) Termination Liability

(1) Termination liability applies to On-Net Channel Mileage, On-Net Channel Extension, and Access Aggregation Port service components and applies when either is disconnected prior to expiration of the commitment period, i.e., term plan.

(2) The termination liability charge is equal to 25% of the remaining monthly charges for the balance of the commitment period beginning with the date of disconnection or cancellation, and ending with the expiration date of the commitment period.

(3) Termination liability applies in addition to any charges associated with satisfying the minimum period obligation.

(4) When the service includes connection to another Telephone Company service, termination liability for the connecting service also applies in accordance with the regulations specified for that connecting service.

(5) Termination liability will not apply if a customer changes its term plan to a longer commitment period as explained in (E) preceding.

(6) Termination liability will not apply to the existing service when (1) a Optical Network Ethernet service is upgraded to a higher bit rate Optical Network Ethernet service, Fibre Channel service, and/or FiCON service (e.g., a Optical Network Ethernet 10 Mbps service is changed to a Optical Network Ethernet 100 Mbps service or to a Optical Network Ethernet 1 Gbps service), and (2) the new term is equal to or of greater length than the term for the terminating service.

Service availability limited. Refer to # footnote on Page 7-192.

ACCESS SERVICE

7. Special Access Service (Cont'd)

7.3 Channel Interface and Network Channel Codes

This section explains the Channel Interface codes and Network Channel codes that the customer must specify when ordering Special Access Service. Included is an example which explains the specific characters of the code, a glossary of Channel Interface codes, impedance levels, Network Channel codes and compatible Channel Interfaces.

Example: If the customer specifies a NT Network Channel Code and a 02DC8.3 Channel Interface at the customer's designated premises, the following is being requested:

NT	=	Metallic Channel with a Predefined Technical Specification Package (1)
02	=	Number of physical wires at customer designated premises
DC	=	Facility interface for direct current or voltage
8	=	Variable impedance level
3	=	Metallic facilities (DC continuity) for direct current/1ow frequency control signals or slow speed data (30 baud)

7.3.1 Glossary of Channel Interface Codes and Options

Code	Option	Definition
AB -		accepts 20 Hz ringing signal at customer's Point of Termination
AC -		accepts 20 Hz ringing signal at customer's end user's Point of Termination
AH -		analog high capacity interface
-	B	60 kHz to 108 kHz (12 channels)
-	C	312 kHz to 552 kHz (60 channels)

7. Special Access Service (Cont'd)

7.3 Channel Interface and Network Channel Codes (Cont'd)

7.3.1 Glossary of Channel Interface Codes and Options (Cont'd)

Code	Option	Definition
CS-		digital hierarchy interface at a digital cross-connect system
-	10R	reconfigurable through DCS at DS1 to DSO level
-	11R	reconfigurable through DCS at DS1 to DS1 level
-	15	1.544 Mbps (DS1) format per PUB 62411 Plus D4
-	15B*	1.544 Mbps (DS1) Superframe (SF) format and B8ZS clear channel capability
-	15J*	1.544 Mbps (DS1) per PUB 62411
-	15K*	1.544 Mbps (DS1) format per PUB 62411 plus extended framing format
-	15L*	1.544 (DS1) format with SF signaling
-	15S*	1.544 Mbps (DS1) format with B8ZS clear channel capability per Technical Reference PUB TR-INS-000342
-	44	44.736 Mbps
-	30R	reconfigurable through DCS at DS3 to DSO level
-	31R	reconfigurable through DCS at DS3 to DS1 level
CT-		Centrex Tie Trunk Termination
CX-		digital termination on a Switch
DA-		data stream in VF frequency band at customer's end user's Point of Termination
DB-		data stream in VF frequency band at customer's Point of Termination
-	10	Frequency shift (108 data set type)
-	43	43A1 to 43B1 Carrier format

* For mid-Link applications only.

7. Special Access Service (Cont'd)

7.3 Channel Interface and Network Channel Codes (Cont'd)

7.3.1 Glossary of Channel Interface Codes and Options (Cont'd)

Code	Option	Definition
DC-		direct current or voltage
-	1	monitoring interface with series RC combination (McCulloh format)
-	2	Telephone Company energized alarm channel
-	3	Metallic facilities (DC continuity) for direct current/low frequency control signals or slow speed data (30 baud)
DD-		DATAPHONE® Select-A-Station (and TABS) interface at customer's Point of Termination
DE-		DATAPHONE® Select-A-Station (and TABS) interface at the customer's end user's Point of Termination
DS-		digital hierarchy interface
-	1S	1.544 Mbps (DS1) ANSI T1.403-1989 Extended Superframe (ESF) and B8ZS Clear Channel Capability
-	15	1.544 Mbps (DS1) format per PUB 62411 plus D4
-	15B	1.544 Mbps (DS1) Superframe (SF) format and B8ZS Clear Channel Capability
-	15E	8-bit PCM encoded in one 64 kbps of the DS1 signal
-	15F	8-bit PCM encoded in two 64 kbps of the DS1 signal
-	15G	8-bit PCM encoded in three 64 kbps of the DS1 signal
-	15H	14/11-bit PCM encoded in six 64 kbps of the DS1 signal
-	15J	1.544 Mbps (DS1) format per PUB 62411
-	15K	1.544 Mbps (DS1) format per PUB 62411 plus extended framing format
-	15L	1.544 Mbps (DS1) with SF signaling
-	15S	1.544 Mbps (DS1) format with B8ZS Clear Channel Capability per Technical Reference PUB TR-INS-000342
-	31	3.152 Mbps (DSIC)
-	31L	3.152 Mbps (DS1C) with SF signaling
-	44	44.736 Mbps (DS3)
-	44A	44.736 Mbps digital video and audio; or 44.736 Mbps (DS3) unchannelized and C-Bit Parity per GR-342, Issue 1
-	44I	44.736 Mbps (DS3) with C-Bit Parity
-	44L	44.736 Mbps (DS3) with SF signaling

7. Special Access Service (Cont'd)

7.3 Channel Interface and Network Channel Codes (Cont'd)

7.3.1 Glossary of Channel Interface Codes and Options (Cont'd)

Code	Option	Definition
DU-		digital access interface
-	19	19.2 kbps
-	19S	19.2 kbps with Secondary Channel Capability
-	24	2.4 kbps
-	24S	2.4 kbps with Secondary Channel Capability
-	48	4.8 kbps
-	48S	4.8 kbps with Secondary Channel Capability
-	56	56.0 kbps
-	56S	56.0 kbps with Secondary Channel Capability
-	96	9.6 kbps
-	96S	9.6 kbps with Secondary Channel Capability
-	A	1.544 Mbps (DS1) format per PUB 62411
-	B	1.544 Mbps (DS1) format per PUB 62411 plus D4
-	lK	1.544 Mbps (DS1) format per PUB 62411 plus extended framing format
-	D	1.544 Mbps (DS1) Superframe (SF) format per TR-NPL-000054 with B8ZS Clear Channel Capability
-	S	1.544 Mbps (DS1) format with B8ZS Clear Channel Capability per TR-NPL-000054
DV-		data/voice interface
-	BA	2.4 kbps
-	BB	4.8 kbps
-	BC	9.6 kbps
-	BL	19.2 kbps
DX-		duplex signaling interface at customer's Point of Termination
DY-		duplex signaling interface at customer's end user's Point of Termination

7. Special Access Service (Cont'd)

7.3 Channel Interface and Network Channel Codes (Cont'd)

7.3.1 Glossary of Channel Interface Codes and Options (Cont'd)

Code		Option	Definition
EA	-	E	Type I E&M Lead Signaling. Customer at POT or customer's end user at POT originates on E Lead
EA	-	M	Type I E&M Lead Signaling. Customer at POT or customer's end user at POT originates on M Lead
EB	-	E	Type II E&M Lead Signaling. Customer at POT or customer's end user at POT originates on E Lead
EB	-	M	Type II E&M Lead Signaling. Customer at POT or customer's end user at POT originates on M Lead
EC	-		Type III E&M signaling at customer POT
EX	-	A	tandem channel unit signaling for loop start or ground start and customer supplies open end (dial tone, etc.) functions
EX	-	B	tandem channel unit signaling for loop start or ground start and customer supplies closed end (dial pulsing, etc.) functions

7. Special Access Service (Cont'd)

7.3 Channel Interface and Network Channel Codes (Cont'd)

7.3.1 Glossary of Channel Interface Codes and Options (Cont'd)

Code	Option	Definition
FC -		optical interface
	1	133 Mbps Fibre Channel
	2	266 Mbps Fibre Channel
	5	531 Mbps Fibre Channel
	10C	FDDI SM 125 Mbps
	10D	FDDI MM 125 Mbps
	13	135 Mbps (3 - DS3s) optical interface transmission bit rate
	15	wavelength channel at 155.520 Mbps
	20	200 Mbps optical interface transmission bit rate
	62	wavelength channel at 2.488 Gbps
	FC	fibre channel 1.06 Gbps
	CCS	ESCON® 200 Mbps
	GFM	FICON 1.06 Gbps
	GIS	ISC 1.06 Gbps
	CTS	ETR/CLO 8 Mbps
	FS	flexible bandwidth of 115.520 Mbps to 2.5 Gbps
	40	405 Mbps (9 - DS3s) optical interface transmission bit rate
	54	560 Mbps (12 - DS3s) optical interface
FM -		DWDM 4-port
	S	sub rate multiplexing, 1.25 Gbps transmission bit rate
GO -		ground start loop signaling - open end function by customer or customer's end user
GS -		ground start loop signaling - closed end function by customer or customer's end user
-	C	Centrex foreign exchange termination
-	M	for termination in central office located answering service concentrator
IA -		E.I.A. (25 pin RS-232)
LA -		end user loop start loop signaling - Type A OPS registered port open end
LB -		end user loop start loop signaling - Type B OPS registered port open end
LC -		end user loop start loop signaling - Type C OPS registered open end
LO -		loop start signaling - open end function by customer or customer's end user
LN -		Local Area Network Interface
	100	Fast Ethernet 125 Mbps
	1GE	Gigabit Ethernet 1.25 Gbps

ACCESS SERVICE

7. Special Access Service (Cont'd)

7.3 Channel Interface and Network Channel Codes (Cont'd)

7.3.1 Glossary of Channel Interface Codes and Options (Cont'd)

Code	Option	Definition
LR-		20 Hz automatic ringdown interface at customer POT with Telephone Company provided PLAR
-	A*	DA Type PLAR channel unit signaling format
-	B*	DS Type PLAR channel unit signaling format
LS-		loop start loop signaling – closed end function by customer or customer's end user
-	M	for terminating in central office located answering service concentrator
NO-		no signaling interface, transmission only
OP-		Optical Parameter (N)
	F	Facility (N)
SO-		SONET Optical
-	AB	Long Range Multilongitudinal Mode (LR1-MLM) Bidirectional Ring
-	AU	LR1-MLM Unidirectional Ring
-	BB	Long Range Single Longitudinal Mode (LR1-SLM) Bidirectional Ring
-	BU	LR1-SLM Unidirectional Ring
-	CB	Intermediate Range Multilongitudinal Mode (IR1-MLM) Bidirectional Ring
-	CU	IR1-MLM Unidirectional Ring
-	DB	Intermediate Range Single Longitudinal Mode (IR1-SLM) Bidirectional Ring
-	DU	IR1-SLM Unidirectional Ring
-	EB	Short Range Multilongitudinal Mode Light Emitting Diode (SR-MLM/LED) Bidirectional Ring
-	EU	SR-MLM/LED Unidirectional Ring
-	FB	Short Range Multilongitudinal Mode (SR-MLM) Bidirectional Ring
-	FU	SR-MLM Unidirectional Ring
SN-		SONET Network (N)
	F	Facility (N)
ST-		Synchronous Transmission Signal (STS)
-	A	STS-1 (51.840 Mbps)

* The designation of the A or B option signifies the type of channel unit employed at the distant end.

7. Special Access Service (Cont'd)

7.3 Channel Interface and Network Channel Codes (Cont'd)

7.3.1 Glossary of Channel Interface Codes and Options (Cont'd)

Code	Option	Definition
PG-		program transmission - no dc signaling
-	1	nominal frequency from 50 to 15000 Hz
-	3	nominal frequency from 200 to 3500 Hz
-	5	nominal frequency from 100 to 5000 Hz
-	8	nominal frequency from 50 to 8000 Hz
PR-		protective relaying*
RV-	O	reverse battery signaling, one way operation, originate by customer
-	T	reverse battery signaling, one way operation, terminate function by customer or customer's end user
SF-		single frequency signaling with VF band at either customer POT or customer's end user
SO-		SONET/SONET Digital Hierarch Optical Interface POT
TB	-0	Hi-Def broadband digital video transport (receive only)
	0-	Hi-Def broadband digital video transport (transmit only)
TD	-0	serial component digital video-uncompressed (receive only)
	0-	serial component digital video-uncompressed (transmit only)
TE	-0	45 Mbps broadband digital video transport (receive only)
	0-	45 Mbps broadband digital video transport (transmit only)
TF-		telephotograph interface
TT-		telegraph/teletypewriter interface at either customer POT or customer's end user
-	2	20.0 milliamperes
-	3	3.0 milliamperes
-	6	62.5 milliamperes

* Available only for the transmission of audio tone protective relaying signals used in the protection of electric power systems during fault conditions.

7. Special Access Service (Cont'd)

7.3 Channel Interface and Network Channel Codes (Cont'd)

7.3.1 Glossary of Channel Interface Codes and Options (Cont'd)

Code	Option	Definition
TV-		television interface
-	0	video signal only (no audio)
-	1	combined (diplexed) video and one 15kHz audio signal
-	2	combined (diplexed) video and two 15kHz audio signals
-	5	video plus one (or two) two-wire 5 kHz audio signal(s)
-	15	video plus one (or two) 15 kHz audio signal(s)
-	15A	video plus one through four 15 kHz audio signal(s)
-	17	video and composite BTSC stereo audio signal
-	20	video plus one through four 20 kHz audio signal(s)
WA-		wideband bandwidth interface at customer's end user POT
-	1	limited bandwidth
-	2	nominal passband from 29000 to 44000 Hz

7. Special Access Service (Cont'd)

7.3 Channel Interface and Network Channel Codes (Cont'd)

7.3.1 Glossary of Channel Interface Codes and Options (Cont'd)

Code	Option	Definition
WB -		wideband data interface at customer POT
-	18S	18.75 kbps, synchronous
-	19A	up to 19.2 kbps asynchronous
-	19S	19.2 kbps synchronous
-	23A	up to 230.4 kbps, asynchronous
-	23S	230.4 kbps, synchronous
-	40S	40.8 kbps, synchronous
-	50A	up to 50.0 kbps, asynchronous
-	50S	50.0 kbps, synchronous
WC -		wideband data interface at customer's end user POT
-	18	18.75 kbps, synchronous
-	19	for 12-wire interface: 19.2 kbps, synchronous for 10-wire interface: up to 19.2 kbps, asynchronous
-	23	up to 230.4 kbps, asynchronous
-	23S	230.4 kbps, synchronous
-	40	40.8 kbps, synchronous
-	50	for 12-wire interface: 50.0 kbps, synchronous for for 10-wire interface: up to 50.0 kbps, asynchronous
WD -		wideband bandwidth interface at customer POT
-	1	nominal passband from 300 to 18000 Hz
-	2	nominal passband from 28000 to 44000 Hz
-	3	nominal passband from 29000 to 44000 Hz

7. Special Access Service (Cont'd)

7.3 Channel Interface and Network Channel Codes (Cont'd)

7.3.2 Impedance

The nominal reference impedance with which the channel will be terminated for the purpose of evaluating transmission performance:

Value (ohms)	Code(s)
110	0
150	1
600	2
900	3+
135	5
75	6
124	7
Variable	8
100	9

\+ For those interface codes with a 4-wire transmission path at the customer designated POT, rather than a standard 900 ohm impedance, the code (3) denotes a customer provided transmission equipment termination. Such terminations were provided to customers in accordance with the F.C.C. Docket No. 20099 Settlement Agreement.

7. Special Access Service (Cont'd)

7.3 Channel Interface and Network Channel Codes (Cont'd)

7.3.3 Digital Hierarchy Channel Interface Codes (4DS)

Customers selecting the multiplexed four-wire DS1 or higher facility interface option at the customer designated premises will be requested to provide subsequent system and channel assignment data. The various digital bit rates in the digital hierarchy employ the channel interface code 04STF, 4DS9, 4DS6 or 04SOF plus the speed options indicated below:

Interface Code and Speed Option	Nominal Bit Rate(Mbps)	Digital Hierarchy Level
4CS9-15	1.544	DS1
4DS9-15	1.544	DS1
4DS9-31	3.152	DS1C
4DS6-44	44.736	DS3
04STF-A	51.840	STS-1

Optical Fiber Interface Option Code and Speed Option	Nominal Bit Rate (Mbps)	Number of Equivalent DS3s
2FCF-13	135	3
2FCF-40	405	9
2FCF-54	560	12
04SOF-A*,C*,E* OR F*	155.520	3
045OF-A*,B*,C*,D*,E* OR F*	622.080	12
O4SOF-A*,B*,C*,D*,E* OR F*	2488.320 (2.488 GBPS)	48

* B or U

7. Special Access Service (Cont'd)

7.3 Channel Interface and Network Channel Codes (Cont'd)

7.3.4 Service Designator/Network Channel Code Conversion Table

The purpose of this table is to show the relationship between the service designator codes (e.g. VGC, MT2, etc.) and the network channel codes that are used for various administrative purposes.

Service Designator Code	Network Channel Code
MTC	MQ
MT1	NT
MT2	NU
MT3	NV
TGC	NQ
TG1	NW
TG2	NY
VGC	LQ
VG1	LB
VG2	LC

7. Special Access Service (Cont'd)

7.3 Channel Interface and Network Channel Codes (Cont'd)

7.3.4 Service Designator/Network Channel Code Conversion Table (Cont'd)

Service Designator Code	Network Channel Code
VG3	LD
VG4	LE
VG5	LF
VG6	LG
VG7	LH
VG8	LJ
VG9	LK
VG10	LN
VG11	LP
VG12	LR
APC	PQ
AP1	PE
AP2	PF
AP3	PJ
AP4	PK
TVC	TQ
TVD	DS
TV1D	TV
TV1	TV
TV2	TW
TV3	TZ
WA1	WJ
WA2	WL
WA3	WN
WA4	WP
WD1	WB
WD2	WE

7. Special Access Service (Cont'd)

7.3 Channel Interface and Network Channel Codes (Cont'd)

7.3.4 Service Designator/Network Channel Code Conversion Table (Cont'd)

Service Designator Code	Network Channel Code
WD3	WF
DA1	XA
DA2	XB
DA3	XG
DA4	XH
DA5	XE
DOV	LV
HC0	HS
HC1	HC
HC1C	HD
HC3	HF, HH
WAL1	SE
WAL1	SF
WAL2	SF
OC3	OB
OC12	OD
OC48	OF

7. Special Access Service (Cont'd)

7.3 Channel Interface and Network Channel Codes (Cont'd)

7.3.5 Compatible Channel Interfaces

The following tables show the channel interface codes (CIs) which are compatible:

(A) Metallic

Compatible CIs

02DC8.1	02DC8.2
02DC8.3	02DC8.3
04DS6.*	02DC8.1
04DS6.*	02DC8.2
04DS9.*	02DC8.1
04DS9.*	02DC8.2

* See 7.3.3 preceding for explanation.

7. Special Access Service (Cont'd)

7.3 Channel Interface and Network Channel Codes (Cont'd)

7.3.5 Compatible Channel Interfaces (Cont'd)

The following tables show the channel interface codes (CIs) which are compatible:

(B) Telegraph Grade

Compatible CIs		Compatible CIs		Compatible CIs	
04CS9.*	02TT2.2	04DB2.43+	04TT2.2	02TT2.2	02TT2.2
04CS9.*	02TT2.6	04DS6.*	02TT2.2	02TT2.3	02TT2.2
04CS9.*	04TT2.2	04DS6.*	02TT2.6	02TT2.3	04TT2.2
04CS9.*	04TT2.6	04DS6.*	04TT2.2	02TT2.6	02TT2.6
02DB2.10	02TT2.2	04DS6.*	04TT2.6	02TT2.6	04TT2.2
02DB2.10	04TT2.2	04DS9.*	02TT2.2	04TT2.2	04TT2.2
02DB2.43+	02TT2.2	04DS9.*	02TT2.6	04TT2.6	02TT2.6
02DB2.43+	02TT2.6	04DS9.*	04TT2.2		
02DB2.43+	04TT2.2	04DS9.*	04TT2.6		
04DB2.10	02TT2.2				
04DB2.10	04TT2.2				
04DB2.43+	02TT2.6				

* See 7.3.3 preceding for explanation.

ACCESS SERVICE

7. Special Access Service (Cont'd)

7.3 Channel Interface and Network Channel Codes (Cont'd)

7.3.5 Compatible Channel Interfaces (Cont'd)

The following tables show the channel interface codes (CIs) which are compatible:

(C) Voice Grade

Compatible CIs		Compatible CIs		Compatible CIs	
04AB2	04AB2	04CS9.*	09DY2	04CS9.*	02LA2
04AB2	04AC2	04CS9.*	09DY3	04CS9.*	02LB2
04AB3	04AC2	04CS9.*	06DY3	04CS9.*	02LC2
04AB2	02AC2	04CS9.*	06DY2	04CS9.*	02LO2
04AB3	02AC2	04CS9.*	04DY2	04CS9.*	02LO3
02AB2	02AC2	04CS9.*	02DY2	04CS9.*	04LR2
02AB3	02AC2	04CS9.*	09EA2	04CS9.*	02LR2
04AB2	04SF2	04CS9.*	09EA3	04CS9.*	06LS2
04AB3	04SF2	04CS9.*	06EA2.E	04CS9.*	04LS2
04AC2	04AC2	04CS9.*	06EA2.M	04CS9.*	02LS2
04AC2	02AC2	04CS9.*	04EA2.E	04CS9.*	02LS3***
04CS9.*	04AC2	04CS9.*	04EA2.M	04CS9.*	02N02
04CS9.*	02AC2	04CS9.*	08EB2.E	04CS9.*	04RV2.T
04CS9.*	06DA2	04CS9.*	08EB2.M	04CS9.*	02RV2.T
04CS9.*	04DA2	04CS9.*	06EB2.E	04CS9.*	04SF3
04CS9.*	02DA2	04CS9.*	06EB2.M	04CS9.*	04TF2
04CS9.*	04DE2	04CS9.*	02G02	04CS9.*	02TF2
04CS9.*	02DE2	04CS9.*	02G03		
04CS9.*	04DX2	04CS9.*	06GS2		
04CS9.*	04DX3	04CS9.*	04GS2		
		04CS9.*	02GS2		
		04CS9.*	02GS3**		

* See 7.3.1 preceding for explanation. The Channel Interface 04CS6.* may be substituted for 04CS9.*.

** The "C" and "M" options as described in 7.3.1 preceding are also available with this combination (i.e., 02GS3.C or 02GS3.M).

*** The "M" option as described in 7.3.1 preceding is also available with this combination (i.e., 02LS3.M).

ACCESS SERVICE

7. Special Access Service (Cont'd)

7.3 Channel Interface and Network Channel Codes (Cont'd)

7.3.5 Compatible Channel Interfaces (Cont'd)

The following tables show the channel interface codes (CIs) which are compatible:

(C) Voice Grade (Cont'd)

Compatible CIs≠		Compatible CIs≠		Compatible CIs≠	
04CT2	04CS9.#	02CT3	08EB2.E	06DA2	06DA2
02CT3	04CS9.#	02CT3	08EB2.M	06DA2	04DA2
02CT3	04DS6.*	02CT3	06EB2.E	06DA2	02DA2
02CT2	04DS9.*	02CT3	06EB2.M	04DA2	04DA2
02CT3	06DX2	02CT3	06EB3.E	04DA2	02DA2
02CT3	04DX2	02CT3	08EC2	02DA2	02DA2
02CT3	04DX3	04CT2	04SF2	04DB2	06DA2
02CT3	09DY3	02CT3	04SF2	04DB2	04DA2
02CT3	06DY3	02CT3	04SF3	04DB2	02DA2
02CT3	09DY2	04CT2	04DS9.*	02DB3	02DA2
02CT3	06DY2	04CT2	04DX2	02DB2	02DA2
02CT3	04DY2	04CT2	06EA2.E	04DB2	04DB2
02CT3	02DY2	04CT2	06EA2.M	04DB2	04N02
02CT3	09EA3	04CT2	08EB2.E	04DB2	02N02
02CT3	09EA2	04CT2	08EB2.M	04DB2	04PR2
02CT3	06EA2.E	04CT2	08EC2	04DB2	02PR2
02CT3	06EA2.M			02DB2	02PR2
02CT3	04EA2.E				
02CT3	04EA2.M				

* See 7.3.3. preceding for explanation.
\# See 7.3.1 preceding for explanation. The Channel Interface 04C26.# may be substituted for 04CS9.#.
≠ The SONET channel interface code 02SOF.B, D or F; 04SOF.B, D or F; or 04SMF.A3, A21, A12, AC, AF, A03, B, B9, C6, E, EE, FD, GC, or H may be substituted for the channel interface code 04DS6.* or 04DS9.*.

ACCESS SERVICE

7. Special Access Service (Cont'd)

7.3 Channel Interface and Network Channel Codes (Cont'd)

7.3.5 Compatible Channel Interfaces (Cont'd)

The following tables show the channel interface codes (CIs) which are compatible:

(C) Voice Grade (Cont'd)

Compatible CIs≠		Compatible CIs≠		Compatible CIs≠	
04DD3	04DE2	04DS9.*	04DE2	04DS9.*	02DY2
04DD3	02DE2	04DS9.*	02DE2	04DS6.*	09EA2
04DS6.*	04AC2	04DS9.*	04DX3	04DS6.*	06EA2.E
04DS6.*	02AC2	04DS6.*	04DX2	04DS6.*	06EA2.M
04DS9.*	04AC2	04DS9.*	04DX2	04DS6.*	04EA2.E
04DS9.*	02AC2	04DS6.*	09DY2	04DS6.*	04EA2.M
04DS6.*	06DA2	04DS6.*	06DY2	04DS9.*	09EA2
04DS6.*	04DA2	04DS9.*	09DY3	04DS9.*	09EA3
04DS6.*	02DA2	04DS9.*	09DY2	04DS9.*	06EA2.E
04DS9.*	06DA2	04DS9.*	06DY3	04DS9.*	06EA2.M
04DS9.*	04DA2	04DS9.*	06DY2	04DS9.*	04EA2.E
04DS9.*	02DA2	04DS6.*	04DY2	04DS9.*	04EA2.M
04DS6.*	04DE2	04DS6.*	02DY2		
		04DS9.*	04DY2		

* See 7.3.3 preceding for explanation.

≠ The SONET channel interface code 02SOF.B, D or F; 04SOF.B, D or F; or 04SMF.A3, A21, A12, AC, AF, A03, B, B9, C6, E, EE, FD, GC, or H may be substituted for the channel interface code 04DS6.* or 04DS9.*.

Vice President, Regulatory
521 East Morehead St., Suite 250, Charlotte, NC 28202

7. Special Access Service (Cont'd)

7.3 Channel Interface and Network Channel Codes (Cont'd)

7.3.5 Compatible Channel Interfaces (Cont'd)

The following tables show the channel interface codes (CIs) which are compatible:

(C) Voice Grade (Cont'd)

Compatible CIs≠		Compatible CIs≠		Compatible CIs≠	
04DS6.*	08EB2.E	04DS6.*	02LB2	04DS6.*	02N02
04DS6.*	08EB2.M	04DS9.*	02LB2	04DS9.*	04N02
04DS6.*	06EB2.E	04DS6.*	02LC2	04DS9.*	02N02
04DS6.*	06EB2.M	04DS9.*	02LC2	04DS6.*	04PR2
04DS9.*	08EB2.E	04DS6.*	02LO2	04DS6.*	02PR2
04DS9.*	08EB2.M	04DS9.*	02LO2	04DS9.*	04PR2
04DS9.*	06EB2.E	04DS9.*	02LO3	04DS9.*	02PR2
04DS9.*	06EB2.M	04DS6.*	04LR2	04DS6.*	04RV2.T
04DS6.*	02GO2	04DS9.*	04LR2	04DS6.*	02RV2.T
04DS9.*	02GO2	04DS6.*	02LR2	04DS9.*	04RV2.T
04DS9.*	02GO3	04DS9.*	02LR2	04DS9.*	02RV2.T
04DS6.*	06GS2	04DS6.*	06LS2	04DS6.*	04SF2
04DS6.*	04GS2	04DS6.*	04LS2	04DS9.*	04SF2
04DS6.*	02GS2	04DS6.*	02LS2	04DS9.*	04SF3
04DS9.*	06GS2	04DS9.*	06LS2	04DS6.*	04TF2
04DS9.*	04GS2	04DS9.*	04LS2	04DS9.*	04TF2
04DS9.*	02GS2	04DS9.*	02LS2	04DS9.*	02TF2
04DS9.*	02GS3**	04DS9.*	02LS3***		
04DS6.*	02LA2	04DS6.*	04NO2		
04DS9.*	02LA2				

* See 7.3.3 preceding for explanation.

** The "C" and "M" options as described in 7.3.1 preceding are also available with this combination (i.e., 02GS3.C or 02GS3.M).

*** The "M" option as described in 7.3.1 preceding is also available with this combination (i.e., 02LS3.M).

≠ The SONET channel interface code 02SOF.B, D or F; 04SOF.B, D or F; or 04SMF.A3, A21, A12, AC, AF, A03, B, B9, C6, E, EE, FD, GC, or H may be substituted for the channel interface code 04DS6.* or 04DS9.*.

7. Special Access Service (Cont'd)

7.3 Channel Interface and Network Channel Codes (Cont'd)

7.3.5 Compatible Channel Interfaces (Cont'd)

The following tables show the channel interface codes (CIs) which are compatible:

(C) Voice Grade (Cont'd)

Compatible CIs		Compatible CIs		Compatible CIs	
04DX2	04DX2	04DX3	06DY3	04DX3	09EA2
04DX3	04DX2	04DX2	06DY2	04DX2	09EA3
04DX3	04DX3	04DX3	06DY2	04DX3	09EA3
06DX2	09DY3	04DX2	04DY2	04DX2	06EA2.E
06DX2	09DY2	04DX3	04DY2	04DX3	06EA2.E
06DX2	06DY3	04DX2	02DY2	04DX2	06EA2.M
06DX2	06DY2	04DX3	02DY2	04DX3	06EA2.M
06DX2	04DY2	06DX2	09EA3	04DX2	04EA2.E
06DX2	02DY2	06DX2	09EA2	04DX3	04EA2.E
04DX2	09DY3	06DX2	06EA2.E	04DX2	04EA2.M
04DX3	09DY3	06DX2	06EA2.M	04DX3	04EA2.M
04DX2	09DY2	06DX2	04EA2.E		
04DX3	09DY2	06DX2	04EA2.M		
04DX2	06DY3	04DX2	09EA2		

ACCESS SERVICE

7. Special Access Service (Cont'd)

7.3 Channel Interface and Network Channel Codes (Cont'd)

7.3.5 Compatible Channel Interfaces (Cont'd)

The following tables show the channel interface codes (CIs) which are compatible:

(C) Voice Grade (Cont'd)

Compatible CIs		Compatible CIs		Compatible CIs	
06DX2	08EB2.E	04DX2	06LS2	09DY2	06DY3
06DX2	08EB2.M	04DX3	06LS2	09DY3	04DY2
06DX2	06EB2.E	04DX3	04LS2	09DY2	04DY2
06DX2	06EB2.M	04DX2	04LS2	09DY2	02DY2
04DX2	08EB2.E	04DX3	02LS3*	09DY3	02DY2
04DX2	08EB2.M	04DX2	02LS3*	06DY3	06DY3
04DX3	08EB2.E	04DX3	02LS2	06DY3	06DY2
04DX3	08EB2.M	04DX2	02LS2	06DY2	06DY2
04DX2	06EB2.E	02DX3	02LS2	06DY3	04DY2
04DX2	06EB2.M	02DX3	02LS3*	06DY3	02DY2
04DX3	06EB2.E	04DX3	04RV2.T	06DY2	04DY2
04DX3	06EB2.M	04DX2	04RV2.T	06DY2	02DY2
04DX2	02LA2	04DX3	02RV2.T	04DY2	02DY2
04DX3	02LA2	04DX2	02RV2.T	04DY2	04DY2
02DX3	02LA2	06DX2	04SF2	02DY2	02DY2
04DX2	02LB2	04DX2	04SF2	06EA2.E	04AC2
04DX3	02LB2	04DX3	04SF2	06EA2.M	04AC2
02DX3	02LB2	04DX2	04SF3	06EA2.E	02AC2
04DX2	02LC2	04DX3	04SF3	06EA2.M	02AC2
04DX3	02LC2	09DY3	09DY3	09EA2	09DY3
02DX3	02LC2	09DY3	09DY2	09EA2	09DY2
04DX2	02LO3	09DY2	09DY2	09EA2	06DY3
04DX3	02LO3	09DY3	06DY3	09EA2	06DY2
		09DY3	06DY2	09EA2	04DY2
		09DY2	06DY2	09EA2	02DY2
				09EA3	09DY3

* The "M" option as described in 7.3.1 preceding is also available with this combination (i.e., 02LS3.M).

7. Special Access Service (Cont'd)

7.3 Channel Interface and Network Channel Codes (Cont'd)

7.3.5 Compatible Channel Interfaces (Cont'd)

The following tables show the channel interface codes (CIs) which are compatible:

(C) Voice Grade (Cont'd)

Compatible CIs		Compatible CIs		Compatible CIs	
09EA3	09DY2	04EA2.M	09DY2	04EA2.E	09EA2
09EA3	06DY3	04EA2.M	06DY3	04EA2.E	09EA3
09EA3	06DY2	04EA2.M	06DY2	04EA2.M	04EA2.M
09EA3	04DY2	04EA2.M	04DY2	09EA2	08EB2.E
09EA3	02DY2	04EA2.M	02DY2	09EA2	08EB2.M
06EA2.E	09DY3	09EA2	09EA2	09EA2	06EB2.E
06EA2.E	09DY2	09EA2	09EA3	09EA2	06EB2.M
06EA2.E	06DY3	09EA2	06EA2.E	09EA3	08EB2.E
06EA2.E	06DY2	09EA2	06EA2.M	09EA3	08EB2.M
06EA2.E	04DY2	09EA2	04EA2.E	09EA3	06EB2.E
06EA2.E	02DY2	09EA2	04EA2.M	09EA3	06EB2.M
06EA2.M	09DY3	09EA3	09EA3	06EA2.E	08EB2.E
06EA2.M	09DY2	09EA3	06EA2.E	06EA2.E	08EB2.M
06EA2.M	06DY3	09EA3	06EA2.M	06EA2.E	06EB2.E
06EA2.M	06DY2	09EA3	04EA2.E	06EA2.E	06EB2.M
06EA2.M	04DY2	09EA3	04EA2.M	06EA2.M	08EB2.E
06EA2.M	02DY2	06EA2.E	06EA2.E	06EA2.M	08EB2.M
04EA3.E	09DY3	06EA2.E	06EA2.M	06EA2.M	06EB2.E
04EA3.E	09DY2	06EA2.M	06EA2.M	06EA2.M	06EB2.M
04EA3.E	09DY3	06EA2.E	04EA2.E	04EA2.E	08EB2.E
04EA3.E	09DY2	06EA2.E	04EA2.M	04EA2.E	08EB2.M
04EA3.E	06DY3	06EA2.M	04EA2.E	04EA3.E	08EB2.E
04EA3.E	06DY2	06EA2.M	04EA2.M	04EA3.E	08EB2.M
04EA3.E	04DY2	04EA2.E	04EA2.E	04EA2.E	06EB2.E
04EA3.E	02DY2	04EA3.E	06EA2.E	04EA2.E	06EB2.M
04EA2.E	06DY3	04EA3.E	06EA2.M	04EA3.E	06EB2.E
04EA2.E	06DY2	04EA3.E	04EA2.E	04EA3.E	06EB2.M
04EA2.E	04DY2	04EA3.E	04EA2.M	04EA2.M	08EB2.E
04EA2.E	02DY2	04EA2.E	04EA2.M		
04EA2.M	09DY3				

7. Special Access Service (Cont'd)

7.3 Channel Interface and Network Channel Codes (Cont'd)

7.3.5 Compatible Channel Interfaces (Cont'd)

The following tables show the channel interface codes (CIs) which are compatible:

(C) Voice Grade (Cont'd)

Compatible CIs		Compatible CIs		Compatible CIs	
04EA2.M	08EB2.M	09EA3	04SF2	06EB3.E	09DY2
04EA2.M	06EB2.E	09EA2	04SF2	06EB3.E	09DY3
04EA2.M	06EB2.M	06EA2.E	04SF3	06EB2.E	06DY2
06EA2.E	02LA2	06EA2.M	04SF3	06EB3.E	06DY2
06EA2.M	02LA2	06EA2.E	04SF2	06EB2.E	06DY3
06EA2.E	02LB2	06EA2.M	04SF2	06EB3.E	06DY3
06EA2.M	02LB2	04EA3.E	04SF2	06EB2.E	04DY2
06EA2.E	02LC2	04EA2.E	04SF2	06EB3.E	02DY2
06EA2.M	02LC2	04EA2.M	04SF2	06EB3.E	04DY2
06EA2.E	02LO3	08EB2.E	04AC2	06EB3.M	09DY2
06EA2.M	02LO3	08EB2.M	04AC2	06EB2.M	09DY3
06EA2.E	06LS2	08EB2.E	02AC2	06EB2.M	06DY2
06EA2.M	06LS2	08EB2.M	02AC2	06EB2.M	06DY3
06EA2.E	04LS2	08EB2.E	09DY3	06EB2.M	04DY2
06EA2.M	04LS2	08EB2.E	09DY2	06EB2.E	02DY2
06EA2.E	02LS2	08EB2.E	06DY3	06EB2.M	02DY2
06EA2.M	02LS2	08EB2.E	06DY2	06EB3.E	09EA2
06EA2.E	02LS3*	08EB2.E	04DY2	06EB3.E	09EA3
06EA2.M	02LS3*	08EB2.E	02DY2	06EB3.E	06EA2.E
06EA2.E	04RV2.T	08EB2.M	09DY3	06EB3.E	06EA2.M
06EA2.M	04RV2.T	08EB2.M	09DY2	06EB3.E	04EA2.E
06EA2.E	02RV2.T	08EB2.M	06DY3	06EB3.E	04EA2.M
06EA2.M	02RV2.T	08EB2.M	06DY2	08EB2.E	08EB2.E
		08EB2.M	04DY2	08EB2.E	08EB2.M
		08EB2.M	02DY2	08EB2.M	08EB2.M
		06EB2.E	09DY2	08EB2.E	06EB2.E
		06EB2.E	09DY3	08EB2.E	06EB2.M

* The "M" option as described in 7.3.1 preceding is also available with this combination (i.e., 02LS3.M).

ACCESS SERVICE

7. Special Access Service (Cont'd)

7.3 Channel Interface and Network Channel Codes (Cont'd)

7.3.5 Compatible Channel Interfaces (Cont'd)

The following tables show the channel interface codes (CIs) which are compatible:

(C) Voice Grade (Cont'd)

Compatible CIs		Compatible CIs		Compatible CIs	
08EB2.M	06EB2.E	08EB2.E	04RV2.T	08EC2	08EB2.M
08EB2.M	06EB2.M	08EB2.M	04RV2.T	08EC2	06EB2.E
06EB2.E	06EB2.E	08EB2.E	02RV2.T	08EC2	06EB2.M
06EB2.E	06EB2.M	08EB2.M	02RV2.T	08EC2	04SF2
06EB3.E	08EB2.E	08EB2.E	04SF2	06EX2.B	02G03
06EB3.E	08EB2.M	08EB2.M	04SF2	06EX2.A	06GS2
06EB2.M	06EB2.M	08EB2.E	04SF3	06EX2.A	04GS2
08EB2.E	02LA2	08EB2.M	04SF3	06EX2.A	02GS2
08EB2.M	02LA2	06EB3.E	04SF2	06EX2.A	02GS3**
08EB2.E	02LB2	06EB2.E	04SF2	06EX2.B	02LA2
08EB2.M	02LB2	06EB2.M	04SF2	06EX2.B	02LB2
08EB2.E	02LC2	08EC2	09DY2	06EX2.B	02LC2
08EB2.M	02LC2	08EC2	09DY3	06EX2.B	02LO2
08EB2.E	02LO3	08EC2	06DY2	06EX2.B	02L03
08EB2.M	02LO3	08EC2	06DY3	06EX2.B	04LR2
08EB2.E	06LS2	08EC2	04DY2	06EX2.B	02LR2
08EB2.M	06LS2	08EC2	02DY2	06EX2.A	06LS2
08EB2.E	04LS2	08EC2	09EA2	06EX2.A	04LS2
08EB2.M	04LS2	08EC2	09EA3	06EX2.A	02LS2
08EB2.E	02LS2	08EC2	06EA2.E	06EX2.A	02LS3*
08EB2.M	02LS2	08EC2	06EA2.M		
08EB2.E	02LS3*	08EC2	04EA2.E		
08EB2.M	02LS3*	08EC2	04EA2.M		
		08EC2	08EB2.E		

** The "C" and "M" options as described in 7.3.1 preceding are also available with this combination (i.e., 02GS3.C or 02GS3.M).

* The "M" option as described in 7.3.1 preceding is also available with this combination (i.e., 02LS3.M).

ACCESS SERVICE

7. Special Access Service (Cont'd)

7.3 Channel Interface and Network Channel Codes (Cont'd)

7.3.5 Compatible Channel Interfaces (Cont'd)

The following tables show the channel interface codes (CIs) which are compatible:

(C) Voice Grade (Cont'd)

Compatible CIs		Compatible CIs		Compatible CIs	
06EX2.A	04SF2	06L02	06LS2	04LR3	04SF2
06EX2.B	04SF2	06L02	04LS2	06LS2	02LA2
06G02	06GS2	06L02	02LS2	04LS2	02LA2
06G02	04GS2	06L02	02LS3**	04LS3	02LA2
06G02	02GS2	04L02	06LS2	02LS2	02LA2
06G02	02GS3*	04L02	04LS2	02LS3**	02LA2
04G02	06GS2	04L03	06LS2	06LS2	02LB2
04G03	06GS2	04L03	04LS2	04LS2	02LB2
04G02	04GS2	04L03	02LS3**	04LS3	02LB2
04G03	04GS2	04L03	02LS2	02LS2	02LB2
04G02	02GS2	04L02	02LS2	02LS3**	02LB2
04G02	02GS3*	04L02	02LS3**	06LS2	02LC2
04G03	02GS2	02L03	02LS3**	04LS2	02LC2
04G03	02GS3*	02L03	02LS2	04LS3	02LC2
02G02	02GS2	02L02	02LS2	02LS2	02LC2
02G03	02GS2	02L02	02LS3**	02LS3**	02LC2
02G02	02GS3*	06L02	04SF2	06LS2	02LO3
02G03	02GS3*	04L02	04SF2	06LS2	02LO2
06G02	04SF2	04L03	04SF2	04LS2	02LO2
04G02	04SF2	04LR3	04LR2	04LS2	02LO3
04G03	04SF2	04LR3	02LR2	04LS3	02LO2
06GS2	02G02	04LR2	04LR2	04LS3	02LO3
04GS2	04G02	04LR2	02LR2		
04GS2	02G02	02LR2	02LR2		
04GS3	02G02	02LR3	02LR2		
04GS2	02G03	04LR2	04SF2		

* The "C" and "M" options as described in 7.3.1 preceding are also available with this combination (i.e., 02GS3.C or 02GS3.M).

** The "M" option as described in 7.3.1 preceding is also available with this combination (i.e., 02LS3.M).

ACCESS SERVICE

7. Special Access Service (Cont'd)

7.3 Channel Interface and Network Channel Codes (Cont'd)

7.3.5 Compatible Channel Interfaces (Cont'd)

The following tables show the channel interface codes (CIs) which are compatible:

(C) Voice Grade (Cont'd)

Compatible CIs		Compatible CIs		Compatible CIs	
06LS2	04SF2	04SF2	09DY3	04SF2	02LB2
04LS3	04SF2	04SF3	06DY3	04SF3	02LB2
04NO2	06DA2	04SF2	06DY2	04SF2	02LC2
04NO2	04DA2	04SF2	06DY3	04SF3	02LC2
04NO2	02DA2	04SF3	06DY2	04SF2	02LO3
02NO2	06DA2	04SF2	04DY2	04SF3	02LO3
02NO2	04DA2	04SF3	04DY2	04SF2	02LR2
02NO2	02DA2	04SF3	02DY2	04SF3	04LR2
04NO2	04DE2	04SF2	02DY2	04SF3	02LR2
04NO2	02DE2	04SF3	09EA2	04SF3	06LS2
04NO2	04NO2	04SF3	09EA3	04SF2	04LS2
04NO2	02NO2	04SF3	04EA2.E	04SF3	04LS2
02NO2	02NO2	04SF3	04EA2.M	04SF2	02LS2
02NO3	02NO2	04SF3	06EB2.E	04SF2	02LS3**
02NO3	02PR2	04SF3	06EB2.M	04SF3	02LS2
04RV2.O	04RV2.T	04SF2	02G03	04SF3	02LS3**
04RV2.O	02RV2.T	04SF3	06GS2	04SF3	04RV2.T
02RV2.O	02RV2.T	04SF2	06GS2	04SF2	04RV2.T
04RV2.O	04SF2	04SF2	04GS2	04SF2	02RV2.T
04SF2	04AC2	04SF3	04GS2	04SF3	02RV2.T
04SF2	02AC2	04SF2	02GS2	04SF3	04SF3
04SF3	09DY3	04SF2	02GS3*	04SF3	04SF2
04SF2	09DY2	04SF3	02GS2	04SF2	04SF2
04SF3	09DY2	04SF3	02GS3*	04TF2	04TF2
		04SF2	02LA2	04TF2	02TF2
		04SF3	02LA2	02TF3	02TF2

* The "C" and "M" options as described in 7.3.1 preceding are also available with this combination (i.e., 02GS3.C or 02GS3.M).

** The "M" option as described in 7.3.1 preceding is also available with this combination (i.e., 02LS3.M).

ACCESS SERVICE

7. Special Access Service (Cont'd)

7.3 Channel Interface and Network Channel Codes (Cont'd)

7.3.5 Compatible Channel Interfaces (Cont'd)

The following tables show the channel interface codes (CIs) which are compatible:

(D) Program Audio

Compatible CIs		Compatible CIs		Compatible CIs	
04DS9.15E	02PG1.3	04DS6.44	02PG2.5	02PG2.1	02PG1.1
04DS9.15F	02PG1.5	04DS6.44	02PG1.8	02PG2.1	02PG2.1
04DS9.15G	02PG1.8	04DS6.44	02PG2.8	02PG2.3	02PG1.3
04DS9.15H	02PG1.1	04DS6.44	02PG1.1	02PG2.3	02PG2.3
04DS9.15E	02PG2.3	04DS6.44	02PG2.1	02PG2.5	02PG1.5
04DS6.44	02PG1.3	04DS9.15F	02PG2.5	02PG2.5	02PG2.5
04DS6.44	02PG2.3	04DS9.15G	02PG2.8	02PG2.8	02PG1.8
04DS6.44	02PG1.5	04DS9.15H	02PG2.1	02PG2.8	02PG2.8

7. Special Access Service (Cont'd)

7.3 Channel Interface and Network Channel Codes (Cont'd)

7.3.5 Compatible Channel Interfaces (Cont'd)

The following tables show the channel interface codes (CIs) which are compatible:

(E) Video

(1) Broadcast Video

Compatible CIs		Compatible CIs		Compatible CIs	
02TV6.1	04TV6.15	04TV6.15A	04TV6.15A	06TV6.15A	06TV6.15A
02TV6.1	04TV7.15	04TV6.15	04TV7.15	06TV6.15	06TV7.15
02TV6.2	06TV6.15	04TV6.15A	04TV7.15A	06TV6.15A	06TV7.15A
02TV6.2	06TV7.15	04TV7.15	04TV6.15	06TV7.5	06TV6.5
02TV7.1	04TV6.15	04TV7.15A	04TV6.15A	06TV7.5	06TV7.5
02TV7.1	04TV7.15	04TV7.15	04TV7.15	06TV7.15	06TV6.15
02TV7.2	06TV6.15	04TV7.15A	04TV7.15A	06TV7.15A	06TV6.15A
02TV7.2	06TV7.15	04TV7.5	04TV6.5	06TV7.15	06TV7.15
04TV6.5	04TV6.5	04TV7.5	04TV7.5	06TV7.15A	06TV7.15A
04TV6.5	04TV7.5	06TV6.5	06TV6.5	08TV6.15A	08TV6.15A
04TV6.15	04TV6.15	06TV6.5	06TV7.5	08TV6.15A	08TV7.15A
		06TV6.15	06TV6.15	10TV6.15A	10TV6.15A
				10TV6.15A	10TV7.15A

(2) Supertrunking Transport Video Service

Compatible CIs	
04WVF.L	04WVF.L

(3) Fiber Based Multichannel Video

Compatible CIs		Compatible CIs		Compatible CIs	
04TV6.15A	04TV6.15A	04TV6.17	04TV6.17	08TV6.15A	08TV6.15A
04TV6.15A	04TV7.15A	04TV6.17	04TV7.17	08TV6.15A	08TV7.15A
		06TV6.15A	06TV6.15A	10TV6.15A	10TV6.15A
		06TV6.15A	06TV7.15A	10TV6.15A	10TV7.15A

7. Special Access Service (Cont'd)

7.3 Channel Interface and Network Channel Codes (Cont'd)

7.3.5 Compatible Channel Interfaces (Cont'd)

The following tables show the channel interface codes (CIs) which are compatible:

(F) Wideband Analog

Compatible CIs		Compatible CIs		Compatible CIs	
04AH5.B	04AH5.B	04AH5.B	04DU9.A,B, or C	04WD5.1	04WA5.1
04AH6.C	04AH6.C	04AH6.C	04DU9.A,B, or C	04WD5.2	04WA5.1
				04WD5.3	04WA5.2

7. Special Access Service (Cont'd)

7.3 Channel Interface and Network Channel Codes (Cont'd)

7.3.5 Compatible Channel Interfaces (Cont'd)

The following tables show the channel interface codes (CIs) which are compatible:

(G) Wideband Data

Compatible CIs		Compatible CIs		Compatible CIs	
08WB5.18S	12WC6.18	08WB5.23A	10WC6.23	08WB5.50A	10WC6.50
08WB5.19A	10WC6.19	08WB5.23S	12WC6.23S	08WB5.50S	12WC6.50
08WB5.19S	12WC6.19	08WB5.40S	12WC6.40		

7. Special Access Service (Cont'd)

7.3 Channel Interface and Network Channel Codes (Cont'd)

7.3.5 Compatible Channel Interfaces (Cont'd)

The following tables show the channel interface codes (CIs) which are compatible:

(H) Digital Data

Compatible CIs		Compatible CIs		Compatible CIs	
04CS9.15	04DU5.24	04DS6.44	04DU5.24	04DU5.24	04DU5.24
04CS9.15	04DU5.48	04DS6.44	04DU5.48	04DU5.48	04DU5.48
04CS9.15	04DU5.56	04DS6.44	04DU5.56	04DU5.56	04DU5.56
04CS9.15	04DU5.96	04DS6.44	04DU5.96	04DU5.96	04DU5.96
04DS6.44	04CS9.15+	04DS9.15	04DU5.24		
04DS6.44	04DS6.44+	04DS9.15	04DU5.48		
04DS9.15	04DS9.15+	04DS9.15	04DU5.56		
		04DS9.15	04DU5.96		

\+ Available only as a cross connect of two digital channels at appropriate digital speeds at a Telephone Company Hub.

7. Special Access Service (Cont'd)

7.3 Channel Interface and Network Channel Codes (Cont'd)

7.3.5 Compatible Channel Interfaces (Cont'd)

The following tables show the channel interface codes (CIs) which are compatible:

(I) High Capacity

Compatible CIs		Compatible CIs	
04CS9.#	04CS9.#	04SOF.B	04DS6.44i
04CS9.#	04DU9	04SOF.C	04DS6.44i
04CS9.#	04DU9.1K	04SOF.D	04DS6.44i
04CS9.#	04DU9.S	04DS9.15K	04DU9.B
04DS6.15	04CS9.#	04DS9.15J	04DU9.A
04DS9.15	04CS9.#	04DS9.15K	04DU9.1K
04DS6.44	04CS9.#	04DS9.15S	04DU9.S
04DS6.15	04DS9.15+	04DS9.31	04DU9.A,B or 1K
04DS9.15	04DS9.15+	04DS6.44	04DS6.44
04DS9.15J	04DS9.15J	04DS6.44	04DU9.A,B or 1K
04DS9.15K	04DS9.15K	04DS6.44A	04DS6.44A
04DS6.44	04DS9.15+	04DS6.44I	04DS6.44I
04DS9.31	04DS9.31	04DU9.A,B or 1K	04DU9.A,B OR 1K
04DS9.1S	04DU9.1S	02FCF.13	04DS6.44
04DS9.1K	04DS9.1K	02FCF.54	044DS6.44
04DS9.15	04DU9-B	04SOF.A*	04DS6.44
04SOF.E	04DU9.DN^	04SOF.B*	04SOF.A*
04SOF.E	04DU9.BN^	04SOF.C*	04SOF.B*
04SOF.E	04DS9.KN^	04SOF.D*	04SOF.C*
04SOF.E	04DS9.1SN^	04SOF.E*	04SOF.D*
04SOF.E	04DS6.44^	04SOF.F*	04SOF.E*
02SOF.B	04DS6.44i	04STF.A	04SOF.F*
02SOF.C	04DS6.44i		04STF.A
02SOF.D	04DS6.44i		

See 7.3.1 preceding for explanation. The Channel Interface 4CS6.# may be substituted for 4CS9.#.
+ Available only as a cross connect of two digital channels at appropriate digital speeds at a Telephone Company Hub.
* B or U
^ Available only when provided in conjunction with Enterprise SONET Service.

7. Special Access Service (Cont'd)

7.3 Channel Interface and Network Channel Codes (Cont'd)

7.3.5 Compatible Channel Interfaces (Cont'd)

The following tables show the channel interface codes (CIs) which are compatible:

(I) High Capacity (Cont'd)

Compatible CIs	
04SMF	04DS6.44I
04SMF.A03	04DS6.44I
04SMF.A3	04DS6.44I
04SMF.A12	04DS6.44I
04SMF.A21	04DS6.44I
04SMF.AC	04DS6.44I
04SMF.AF	04DS6.44I
04SMF.B	04DS6.44I
04SMF.B9	04DS6.44I
04SMF.C6	04DS6.44I
04SMF.EE	04DS6.44I
04SMF.FD	04DS6.44I
04SMF.GC	04DS6.44I
02SOF.B	04DS9.15
02SOF.C	04DS6.15
02SOF.D	04DS6.15
04SOF.B	04DS6.15
04SOF.C	04DS6.15
04SOF.D	04DS6.15
04SMF	04DS9.15
04SMF.A03	04DS6.15
04SMF.A3	04DS6.15
04SMF.A12	04DS6.15
04SMF.A21	04DS6.15
04SMF.AC	04DS6.15
04SMF.AF	04DS6.15
04SMF.B	04DS6.15
04SMF.B9	04DS6.15
04SMF.C6	04DS6.15
04SMF.EE	04DS6.15
04SMF.FD	04DS6.15
04SMF.GC	04DS6.15

Compatible CIs	
02SOF.B	04DS9.1S
02SOF.C	04DS6.1S
02SOF.D	04DS6.1S
04SOF.B	04DS6.1S
04SOF.C	04DS6.1S
04SOF.D	04DS6.1S
04SMF	04DS9.1S
04SMF.A03	04DS6.1S
04SMF.A3	04DS6.1S
04SMF.A12	04DS6.1S
04SMF.A21	04DS6.1S
04SMF.AC	04DS6.1S
04SMF.AF	04DS6.1S
04SMF.B	04DS6.1S
04SMF.B9	04DS6.1S
04SMF.C6	04DS6.1S
04SMF.EE	04DS6.1S
04SMF.FD	04DS6.1S
04SMF.GC	04DS6.1S

7. Special Access Service (Cont'd)

7.3 Channel Interface and Network Channel Codes (Cont'd)

7.3.5 Compatible Channel Interfaces (Cont'd)

The following tables show the channel interface codes (CIs) which are compatible:

(J) WATS Access Line (WAL)

WATS Serving Office Supervisory Signaling	Customer Premises Interface Code
Loop Start (LO)	02LS2, 02LS3 04LS2
Ground.Start (G)	02GS2, 02GS3 04GS2
Loop.Reverse.Battery (RV)	02RV2.T, 02RV3.T 06EA2.E, 06EA2.M, 08EB2.E 08EB2.M
E&M	06EA2.E, 06EA2.M, 08EB2.E, 08EB2.M

7. Special Access Service (Cont'd)

7.3 Channel Interface and Network Channel Codes (Cont'd)

7.3.5 Compatible Channel Interfaces (Cont'd)

The following tables show the channel interface codes (CIs) which are compatible:

(K) DIGIROUTE℠ Digital Service II

Compatible CIs≠	
04CS9.#	04CS9.#
04CS9.#	04DU5.19
04CS9.#	04DU5.19S
04CS9.#	04DU5.24
04CS9.#	04DU5.24S
04CS9.#	04DU5.48
04CS9.#	04DU5.48S
04CS9.#	04DU5.56
04CS9.#	04DU5.56S
04CS9.#	04DU5.96
04CS9.#	04DU5.96S
04CS9.#	02DU5.19
04CS9.#	02DU5.24
04CS9.#	02DU5.48
04DS6.44	04CS9.#
04DS9.15	04DS9.15+
04DS6.44	04DS9.15+
04DS9.15	04DU5.19
04DS9.15	04DU5.19S
04DS9.15	04DU5.24
04DS9.15	04DU5.24S
04DS9.15	04DU5.48

Compatible CIs≠	
04DS9.15	04DU5.48S
04DS9.15	04DU5.56
04DS9.15	04DU5.56S
04DS9.15	04DU5.96
04DS9.15	04DU5.96S
04DS9.15	02DU5.19
04DS9.15	02DU5.24
04DS9.15	02DU5.48
04DS9.15	02DU5.96
04DS6.44	04DU5.19
04DS6.44	04DU5.19S
04DS6.44	04DU5.44+
04DS6.44	04DU5.44+
04DS6.44	04DU5.24
04DS6.44	04DU5.24S
04DS6.44	04DU5.48
04DS6.44	04DU5.48S
04DS6.44	04DU5.56
04DS6.44	04DU5.56S
04DS6.44	04DU5.96
04DS6.44	04DU5.96S
04DS6.44	02DU5.19
04DS6.44	02DU5.24
04DS6.44	02DU5.48
04DS6.44	02DU5.96

Compatible CIs≠	
2DU5.19	02DU5.19
2DU5.24	02DU5.24
2DU5.48	02DU5.48
2DU5.96	02DU5.96
04DU5.19	04DU5.19
04DU5.19S	04DU5.19S
04DU5.24	04DU5.24
04DU5.24S	04DU5.24s
04DU5.48	04DU5.48
04DU5.48S	04DU5.48S
04DU5.56	04DU5.56
04DU5.56S	04DU5.56S
04DU5.96	04DU5.96
04DU5.96S	04DUS.96S

See 7.3.1 preceding for explanation. The Channel Interface 04CS6.# may be substituted for 04CS9.#.

* Available only as a cross connect of two digital channels at appropriate digital speeds at a Telephone Company Hub.

≠ The SONET channel interface code 02SOF.B, D or F; 04SOF.B, D or F; or 04SMF.A3, A21, A12, AC, AF, A03, B, B9, C6, E, EE, FD, GC, or H may be substituted for the channel interface code 04DS6.* or 04DS9.*.

7. Special Access Service (Cont'd)

7.3 Channel Interface and Network Channel Codes (Cont'd)

7.3.5 Compatible Channel Interfaces (Cont'd)

The following tables show the channel interface codes (CIs) which are compatible:

(L) DOVROUTE℠ Service

Compatible CIs≠		Compatible CIs≠		Compatible CIs≠	
04CS9.#	04CS9.#	04DS9.15	02DV8.BA	02DV8.BA	02LC2*
04CS9.#	2DV8.BA	04DS9.15	02DV8.BB	02DV8.BB	02LC2*
04CS9.#	2DV8.BB	04DS9.15	02DV8.BC	02DV8.BC	02LC2*
04CS9.#	2DV8.BC	04DS9.15	02DV8.BL	02DV8.BL	02LC2*
04CS9.#	2DV8.BL	02DV8.BA	02DV8.BA		
04DS9.15+	04DS9.15+	02DV8.BB	02DV8.BB		
		02DV8.BC	02DV8.BC		
		02DV8.BL	02DV8.BL		

(M) Reserved for Future Use

\+ Available only as a cross connect of two digital channels at appropriate digital speeds at a Telephone Company Hub.

\# See 7.3.1 preceding for explanation. The Channel Interface 04CS6.# may be substituted for 04CS9.#.

≠ The SONET channel interface code 02SOF.B, D or F; 04SOF.B, D or F; or 04SMF.A3, A21, A12, AC, AF, A03, B, B9, C6, E, EE, FD, GC, or H may be substituted for the channel interface code 04DS6.* or 04DS9.*.

7. Special Access Service (Cont'd)

7.3 Channel Interface and Network Channel Codes (Cont'd)

7.3.5 Compatible Channel Interfaces (Cont'd)

The following tables show the channel interface codes (CIs) which are compatible:

(N) Advanced Video Service

(1) Advanced Uncompressed Digital Video

Compatible CIs		Compatible CIs	
04TV6.0	04TV6.0	10TV6.20	10TV6.20
04TV6.20	04TV6.20		
04TV6.17	04TV6.17		
06TV.20	06TV6.20		

(2) Advanced Broadcast Video Service*

Compatible CIs		Compatible CIs	
04TV6.15	04TV6.15	06TV6.15A	6TV6.15A
04DS6.44A	04TV6.15	06DS6.44A	06TV6.15A
04TV6.15A	04TV6.15A	08TV6.15A	08TV6.15A
04DS6.44A	04TV6.15A	08DS6.44A	08TV6.15A
06TV6.15	06TV6.15	10TV6.15A	10TV6.15A
06DS6.44A	06TV6.15A	10DS6.44A	10TV6.15A

(3) Serial Component Video Service

Compatible CIs	
02TD6.E	02TD6.E

* Service availability is limited. See footnote in Section 7.2.14(B) for more details.

7. Special Access Service (Cont'd)

7.3 Channel Interface and Network Channel Codes (Cont'd)

7.3.5 Compatible Channel Interfaces (Cont'd)

The following tables show the channel interface codes (CIs) which are compatible:

(N) Advanced Video Service (Cont'd)

(4) Hi-Def Digital Video Transport Service

Compatible CIs	
02TB6	02TB6

(5) 45 Mbps Digital Video Transport Service

Compatible CIs	
10TV6.20D	10TV6.20D
04TE6.20D	04TE6.20D
10TV6.20D	04TE6.20D
04TE6.20D	10TV6.20D

(O) Channel Extension Service

Compatible CIs	
02FCF.20	02FCF.20

(P) IntelliBeam Optical Transport Service

Compatible CIs		Compatible CIs	
02FCF.15	02FCF.15	02FMS.S	02FMS.S
02FCF.62	02FCF.62	02FMF.4	02FMF.4
02FCF.25	02FCF.25	02LNF.100	02LNF.100
02FCF.FC1	02FCF.FC1	02LNF.1GE	02LNF.1GE
02FCF.FC2	02FCF.FC2	02TD6.E	02TD6.E
02FCF.FC5	02FCF.FC5	02FCF.FC	02FCF.FC
02FCF.CCS	02FCF.CCS	02FCF.CTS	02FCF.CTS
02FCF.GFM	02FCF.GFM	02FCF.10C	02FCF.10C
02FCF.GIS	02FCF.GIS	02FCF.10D	02FCF.10D
O2SOF.D	O2CXF.A, B, or C		
O4SOF.D	O2CXF.A, B, or C		

(Q) Optical Network

Compatible CIs	Compatible CIs	Compatible CIs
02LNF.A02	02LNF.A04	02LNF.A07
02SOF.B	02SOF.D	02SOF.F
04LN9.1CT	04LN9.10T	04SOF.B
04SOF.D	04SOF.F	04SOF.X
04ST6.A	04CMF.C3	04CMF.C12
04CMF.C48	02OPF.A02	02OPF.A04
02OPF.A07	02QBF.K02	O2SOF.X

7. Special Access Service (Cont'd)

7.4 Rate Regulations

This section contains the specific regulations governing the rates and charges that apply for Special Access Service.

7.4.1 Types of Rates and Charges

There are three types of rates and charges. These are monthly rates, daily rates and nonrecurring charges. The rates and charges are described as follows:

(A) Monthly Rates

Monthly rates are flat recurring rates that apply each month or fraction thereof that a Special Access Service is provided. For billing purposes, each month is considered to have 30 days.

When a rate is shown as a three year rate or a five year rate, the rate applies each month or fraction thereof that the Special Access Service is provided. However, early termination charges apply as set forth in (D) following if the service is disconnected prior to completion of the three or five year term for the service. Section 7.4.9(C) following contains regulations which are specific to the application of three year and five year rates. Service Discount Plans as set forth in Section 7.4.10 following are not available with Channel Extension Service.

In the states where Expanded Interconnection has become operational, monthly rates for Standard Channel Terminations, Channel Mileage and certain Optional Features and Functions/Basic Service Elements for 1.544 Mbps and 44.736 Mbps (electrical) Special Access High Capacity Services and certain SONET Services are arranged in pricing zones. The pricing zone for each serving wire center in the states where Expanded Interconnection has become operational is specified in the NATIONAL EXCHANGE CARRIER ASSOCIATION, INC. TARIFF F.C.C. No. 4.

In wire centers within a participating Metropolitan Statistical Area (MSA), monthly rates for certain Special Access and SONET Service rate elements are arranged in price bands. The price band for each serving wire center within a qualifying MSA and the type of Special Access Services which are subject to price band rating are specified in Section 15.2 following.

7. Special Access Service (Cont'd)

7.4 Rate Regulations (Cont'd)

7.4.1 Types of Rates and Charges (Cont'd)

(A) Monthly Rates (Cont'd)

When a customer's designated premises is served by a serving wire center located in a state other the state in which the customer's designated premises is located, the rates for Special Access Services for such customer shall be the Special Access Service rates then in effect for the serving wire center from which the customer is served.

7. Special Access Service (Cont'd)

7.4 Rate Regulations (Cont'd)

7.4.1 Types of Rates and Charges (Cont'd)

(B) Daily Rates

Daily Rates are flat recurring rates that apply to each 24 hour period or fraction thereof that a Program Audio, Video or Advanced Video Special Access Service is provided for part-time or occasional use. For purposes of applying daily rates, the 24 hour period is not limited to a calendar day.

Part-time or occasional Video or Program Audio Service provided within a consecutive 30 day period will be charged the daily rate, not to exceed an amount equal to the monthly rate. For each subsequent day or part day, a charge equal to 1/30th of the monthly rate shall apply.

Part-time or occasional Advanced Video Services provided within a consecutive 30 day period will be charged either the daily rate for each day on which part-time or occasional Advanced Video Service is provided or the monthly rate, whichever produces the lesser rate.

(C) Nonrecurring Charges

Nonrecurring charges are one-time charges that apply for specific work activity (i.e., installation or change to an existing service). The types of nonrecurring charges that apply for Special Access Service are: installation of service, installation of optional features and functions, Basic Service Elements and service rearrangements.

7. Special Access Service (Cont'd)

7.4 Rate Regulations (Cont'd)

7.4.1 Types of Rates and Charges (Cont'd)

(C) Nonrecurring Charges (Cont'd)

(1) Installation of Service

For part-time Broadcast Video and part-time Advanced Video Services, nonrecurring charges also apply for a Telephone Company technician to oversee the operation of service during an event for which the customer has ordered part-time Broadcast Video or Advanced Video Service and requested that a technician be present. The charge for a Telephone Company technician to oversee the operation of a part-time service during an event will be the same as the charge for Stand By Labor. The charge for Stand By Labor will apply per customer. When a single Telephone Company technician oversees the operation of part-time service(s) for more than one customer, the total charge to perform Stand By Labor will be divided equally between the customers involved. Stand By Labor charges are set forth in Section 31.13.2(B) following.

Nonrecurring charges apply to each Special Access Service installed. Orders for the installation of Metallic, Telegraph Grade, Voice Grade, Program Audio, Video*, 1.544 Mbps High Capacity, WATS, DIGIROUTE℠ digital service II, Advanced Video Service* and DOVROUTE℠ service will be subject to a first and additional nonrecurring charge rate structure. A First Nonrecurring Charge will apply, per channel termination, for the initial service ordered. An additional Nonrecurring Charge will apply, per channel termination, for each additional service which is ordered at the same time on the same Access Order, for the same due date and between the same premises, provided the service and operating characteristics (e.g., bridging) are identical to the initial service ordered. Orders for the installation of Channel Extension Service are subject to the regulations set forth in Section 7.4.9(C) following.

* The First and Additional nonrecurring charge rate structure is not applicable to Premises to Hub Channel Terminations.

7. Special Access Service (Cont'd)

7.4 Rate Regulations (Cont'd)

7.4.1 Types of Rates and Charges (Cont'd)

(C) Nonrecurring Charges (Cont'd)

(1) Installation of Service (Cont'd)

For part-time Broadcast Video or Advanced Broadcast Video Service*, the nonrecurring charge for the installation of service** is further subject to an initial occurrence and a subsequent occurrence nonrecurring rate structure. An Initial Occurrence Charge will apply for the initial (first) installation of part-time service. A Subsequent Occurrence Charge will apply for any subsequent (additional) installation of the same part-time service between the same premises or between the same premises and Telephone Company Hub as the initial occurrence (i.e., the customer requests repeated installations for the same type of part-time service between the same locations). The Subsequent Occurrence Charge applies only when the customer has requested a minimum of four installations and is subject to the following conditions.

(a) The customer has provided the Telephone Company with a schedule of dates which includes at least four separate occurrences where part-time service will be required between the same locations. The schedule must include the date of the initial occurrence and the dates of the subsequent occurrences; and

(b) the scheduled dates for the subsequent occurrences are within nine months of the scheduled date for the initial occurrence; and

(c) at the premises involved, the points of termination used for the initial occurrence are the same points for termination used for the subsequent occurrences; and

(d) except for the duration that service is to be provided, the part-time service requested for the initial occurrence is identical to the part-time service requested for the subsequent occurrences.

* Part time ABVS availability is limited. See footnote in Section 7.2.14(B) more details.

** The initial and subsequent occurrence nonrecurring charge rate structure is not applicable to Premises to Hub channel terminations.

7. Special Access Service (Cont'd)

7.4 Rate Regulations (Cont'd)

7.4.1 Types of Rates and Charges (Cont'd)

(C) Nonrecurring Charges (Cont'd)

(1) Installation of Service (Cont'd)

For 44.736 Mbps Network Access Ports, the 44.736 Mid-link Charge, the nonrecurring cost for the installation of service will be recovered over the first twelve months of service for FES Standard Channel Terminations, NRS 44.736 Mbps Network Access Ports and the 44.736 Mbps Mid-link Charge. Nonrecurring Charges for the FES Office Channel Terminations will be billed on the first bill following installation of service. In the event that service is disconnected prior to satisfying the nonrecurring charge recovery period, the customer shall be responsible for:

- a nonrecurring charge liability equal to the balance of the nonrecurring charge not yet recovered. For FES Channel Terminations ordered on a month to month basis, NRS 44.736 Mbps Network Access Ports and the 44.736 Mbps Mid-link Charge, the nonrecurring charge not yet recovered will be determined by multiplying the nonrecurring liability charge by the number of months remaining in the recovery period. For FES Channel Terminations ordered under a Service Discount Plan, the nonrecurring charge not yet recovered will be satisfied with the application of termination liability charges for the balance of the commitment period as set forth in 7.4.10(C) following, and

- satisfying the minimum period requirement as set forth in Section 5.2.5 preceding, and

- payment of any service Discount Plan termination liability as set forth in 7.4.10 following associated with the disconnected service.

7. Special Access Service (Cont'd)

7.4 Rate Regulations (Cont'd)

7.4.1 Types of Rates and Charges (Cont'd)

(C) Nonrecurring Charges (Cont'd)

(1) Installation of Service (Cont'd)

Nonrecurring Liability Charges are set forth in Section 30.7.9(B)(4) following for price band charges and 31.7.9(B)(4) following for all other charges for the 44.736 Mbps Mid-link Charge in Section 30.7.15(D) following for price band charges and 31.7.15(D) following for all other charges for FES and Section 30.19.4 following for price band charges and 31.19.4 following for all other charges for the 44.736 Mbps NRS Network Access Port.

7. Special Access Service (Cont'd)

7.4 Rate Regulations (Cont'd)

7.4.1 Types of Rates and Charges (Cont'd)

(C) Nonrecurring Charges (Cont'd)

(1) Installation of Service (Cont'd)

The nonrecurring charges for the installation of service are set forth in 30.7 following for price band charges and 31.7 following for all other charges, as applicable, as a nonrecurring charge for the Channel Termination rate element (Standard, Office Channel Termination cross-connect or Virtual Office Channel Termination, as applicable).

Nonrecurring charges do not apply for the rearrangement of Special Access Services on to an Enterprise SONET Service (ESS) ring provided that (i) the same customer designated premises are maintained; and (ii) rearrangement on the ESS ring occurs during the ESS conversion period as set forth in Section 26.1.2(D) following.

When service is added to a Commitment Discount Plan or the National Discount Plan (as specified in Section 25.2 following), the channel termination nonrecurring charge which applies to such installed service is the lesser of (i) the applicable nonrecurring charge as specified in Section 30 following for price band charges, and 31 following for all other charges or (ii) $1.00.

In addition, a nonrecurring charge as set forth in 7.1.2(B) preceding applies to Channel Mileage between two Telephone Company Hubs where multiplexing and/or FairPoint Enterprise Network Reconfiguration Service functions are performed. Such nonrecurring charges are set forth in 30.7.9 following for price band charges and 31.7.9 following for all other charges as a nonrecurring charge for Mid-link Channel Mileage.

Note: See Section 28 for further information.

7. Special Access Service (Cont'd)

7.4 Rate Regulations (Cont'd)

7.4.1 Types of Rates and Charges (Cont'd)

(C) Nonrecurring Charges (Cont'd)

(1) Installation of Service (Cont'd)

In the states where Expanded Interconnection has become operational, nonrecurring charges for the Standard Channel Termination and the Mid-link Charge for 1.544 Mbps and 44.736 Mbps (electrical) Special Access High Capacity Services are arranged in pricing zones. The pricing zone for each serving wire center in the states where Expanded Interconnection has become operational is specified in the NATIONAL EXCHANGE CARRIER ASSOCIATION, INC. TARIFF F.C.C. NO.4.

In wire centers within a qualifying Metropolitan Statistical Area (MSA), nonrecurring charges for certain Special Access and SONET Service rate elements are arranged in price bands. The price band for each serving wire center within a qualifying MSA and the type of Special Access Services which are subject to price band rating are specified in Section 15.3 following.

When a customer's designated premises is served by a serving wire center located in a state other than the state in which the customer's designated premises is located, the nonrecurring charges for Special Access Services for such customer shall be the Special Access Service nonrecurring charges then in effect for the serving wire center from which the customer is served.

7. Special Access Service (Cont'd)

7.4 Rate Regulations (Cont'd)

7.4.1 Types of Rates and Charges (Cont'd)

(C) Nonrecurring Charges (Cont'd)

(1) Installation of Service (Cont'd)

For Video Service, Nonrecurring Charges also apply for the installation of repeaters in the facility between the serving wire centers involved. The charge for the installation of repeaters is applied as a nonrecurring charge for each channel mileage band for full-time or part-time Video Service. The nonrecurring charge for the installation of repeaters in the channel mileage will not apply to part-time Video Service provided solely over microwave transmission.

Included as part of the channel termination is the use of up to twenty-five (25) feet of coaxial cable from the point at which the video service enters the customer's building to the channel interface. In the event that the customer requests that the Telephone Company extend the location of the channel interface beyond 25 feet, and the Telephone Company agrees to extend the communications path, the charges set forth for Other Labor in Section 13.2.5 following will apply for the extended portion of the communications path.

The nonrecurring charges applicable to the installation of Video Service are set forth in Section 30.7.5 following for price band charges and 31.7.5 following for all other charges.

In the event the Telephone Company must construct facilities for Video Service for which no foreseeable reuse of those facilities is forecast, Special Construction rates and charges as set forth in Section 5.1.3 preceding may also apply.

7. Special Access Service (Cont'd)

7.4 Rate Regulations (Cont'd)

7.4.1 Types of Rates and Charges (Cont'd)

(C) Nonrecurring Charges (Cont'd)

(1) Installation of Service (Cont'd)

In the event that video electronic equipment is unavailable and the Telephone Company must secure and ship electronic equipment in order to satisfy a customer's request for part-time Broadcast Video or Advanced Broadcast Video Service*, the customer shall be given the option to authorize the Telephone Company to secure and ship the equipment or to cancel the order. If authority is given to the Telephone Company to obtain the equipment, the customer shall be advised of all shipping and related charges (USOC NREVE will identify the amount of shipping and related charges.) Such charges shall be flowed through to, and be the responsibility of, the customer. If the customer is unwilling to authorize payment of shipping and related charges and elects to cancel the order for service, cancellation charges as set forth in Section 5.2.3 preceding will not apply. **(D)** | | | | | | | | **(D)**

* Part time ABVS availability is limited. See footnote in Section 7.2.14(B) for more details.

7. Special Access Service (Cont'd)

7.4 Rate Regulations (Cont'd)

7.4.1 Types of Rates and Charges (Cont'd)

(C) Nonrecurring Charges (Cont'd)

(1) Installation of Service (Cont'd) **(D)**

(D)

7. Special Access Service (Cont'd)

7.4 Rate Regulations (Cont'd)

7.4.1 Types of Rates and Charges (Cont'd)

(C) Nonrecurring Charges (Cont'd)

(2) Installation of Optional Features and Functions/Basic Service Elements

Nonrecurring charges apply for the installation of some of the optional features and functions or Basic Service Elements available with Special Access Service. Except for 1.544 Mbps Clear Channel Capability and MVS or Advanced Video Service optional features and functions, the charge applies whether the feature or function or BSE is installed coincident with the initial installation of service or at any time subsequent to the installation of the service. The charge for 1.544 Mbps High Capacity Clear Channel Capability and MVS or Advanced Video Service optional features and functions, applies only when the feature or function is installed at any time subsequent to the installation of service. The MVS Rf Subcarrier Transport optional feature is further subject to a First and Additional Nonrecurring Charge structure as set forth in (C)(1) preceding and 7.4.9(B)(3) following.

The optional features or BSEs for which nonrecurring charges apply are:

- Voice Grade Data Capability
- Voice Grade Telephoto Capability
- Program Audio Gain Conditioning
- Program Audio Stereo
- Wideband Data Transfer Arrangement
- WATS Access Line Extension Service
- DS3 to DS1 Central Office Multiplexing
- 1.544 Mbps High Capacity Clear Channel Capability
- MVS Video Bridging
- MVS Additional Separate Audio Signals
- MVS BTSC Stereo Audio Signal
- MVS Rf Subcarrier Transport
- SVS Video Bridging
- AUDVS Video Bridging

Nonrecurring charges also apply for DSR rate elements as set forth in Section 34.1 following.

ACCESS SERVICE

7. Special Access Service (Cont'd)

7.4 Rate Regulations (Cont'd)

7.4.1 Types of Rates and Charges (Cont'd)

(C) Nonrecurring Charges (Cont'd)

(2) Installation of Optional Features and Functions/Basic Service Elements (Cont'd)

In the states where Expanded Interconnection has become operational, nonrecurring charges for certain Optional Features and Functions/Basic Service Elements for 1.544 Mbps and 44.736 Mbps (electrical) High Capacity Special Access Services are arranged in pricing zones. The pricing zone for each serving wire center in the states where Expanded Interconnection has become operational is specified in the NATIONAL EXCHANGE CARRIER ASSOCIATION, INC. TARIFF F.C.C. NO. 4.

When a customer's designated premises is served by a serving wire center located in a state other than the state in which the customer's designated premises is located, the nonrecurring charges for Special Access Services Optional Features and Functions/Basic Service Elements for such customer shall be the Special Access Service nonrecurring charges then in effect for the serving wire center from which the customer is served.

ACCESS SERVICE

7. Special Access Service (Cont'd)

7.4 Rate Regulations (Cont'd)

7.4.1 Types of Rates and Charges (Cont'd)

(C) Nonrecurring Charges (Cont'd)

(3) Service Rearrangements

Service rearrangements are changes to existing (installed) services which do not result in either a change in the minimum period requirements or a change in the physical location of the point of termination at a customer designated premises. Changes which result in a change in the minimum period requirements (i.e., a change from one type of Special Access Service to another) are treated as discontinuances of existing service and installations of new service and are described in 5.2.5(D) preceding. Changes in the physical location of the point of termination at a customer designated premises are treated as moves and are described and charged for as set forth in 7.4.5 following.

The charge to the customer for the service rearrangement is dependent on whether the change is administrative only in nature or involves actual physical change to the service.

Administrative changes, as follow, will be made without charge(s) to the customer:

- Change of customer name,
- Change of customer or customer's end user premises address when the change of address is not a result of a physical relocation of equipment,
- Change in billing data (name, address, or contact name or telephone number),
- Change of agency authorization,
- Change of customer circuit identification
- Change of billing account number,
- Change of customer test line number,
- Change of customer or customer's end user contact name or telephone number, and
- Change of jurisdiction.

7. Special Access Service (Cont'd)

7.4 Rate Regulations (Cont'd)

7.4.1 Types of Rates and Charges (Cont'd)

(C) Nonrecurring Charges (Cont'd)

(3) Service Rearrangements (Cont'd)

All other service arrangements will be charged for as follows:

- If the changes involves the addition of, or rearrangement to, one or more channel terminations to an existing multipoint service, the appropriate nonrecurring charge(s) will apply as set forth in (1) preceding. The charge(s) will apply only for the channel termination(s) that is being added or rearranged.

- If the change involves the addition of an optional feature or function or a BSE which has a separate nonrecurring charge, that nonrecurring charge will apply.

- If the change involves changing the type of signaling on a Voice Grade service, a charge equal to the Voice Grade channel termination rate element nonrecurring charge will apply on a first and additional basis. The charge will apply per channel termination affected.

- If the change involves the rearrangement of an existing Voice Grade Service or an existing multiplexed Voice Grade Service (e.g., Voice Grade Service multiplexed to Telegraph Grade Service) to a High Capacity Service, a Voice Grade to DS1 Rearrangement Charge will apply. The Voice Grade to DS1 Rearrangement Charge, as set forth in 30.7.3(E) following for price band charges and 31.7.3(E) following for all other charges will apply to each Voice Grade Service rearranged.

7. Special Access Service (Cont'd)

7.4 Rate Regulations (Cont'd)

7.4.1 Types of Rates and Charges (Cont'd)

(C) Nonrecurring Charges (Cont'd)

(3) Service Rearrangements (Cont'd)

- If the change involves the rearrangement of an existing Voice Grade Service derived from a High Capacity Service to a different High Capacity Service, a Voice Grade to DS1 Rearrangement Charge will apply. The charge applies only when both High Capacity Services involved are between the same customer premises and Telephone Company Hub where the multiplexing function is performed. The Voice Grade to DS1 Rearrangement Charge, as set forth in 30.7.3(E) following for price band charges and 31.7.3(E) following for all other charges will apply to each Voice Grade Service rearranged.

- If the change involves the rearrangement of an existing DIGIROUTE℠ digital service II special access service to a High Capacity Service, a DDS II to DS1 Rearrangement Charge will apply. The DDS II to DS1 Rearrangement Charge, as set forth in 30.7.12(E) following for price band charges and 31.7.12(E) following for all other charges will apply to each DIGIROUTE℠ digital service II rearranged.

- If the change involves the rearrangement of an existing DIGIROUTE℠ digital service II special access service derived from a High Capacity Service to a different High Capacity Service, a DDS II to DS1 Rearrangement Charge will apply. The charge applies only when both High Capacity Services involved are between the same customer premises and Telephone Company Hub where the multiplexing function is performed. The DDS II to DS1 Rearrangement Charge, as set forth in 30.7.12(E) following for price band charges and 31.7.12(E) following for all other charges will apply to each DIGIROUTE℠ digital service II rearranged.

7. Special Access Service (Cont'd)

7.4 Rate Regulations (Cont'd)

7.4.1 Types of Rates and Charges (Cont'd)

(C) Nonrecurring Charges (Cont'd)

(3) Service Rearrangements (Cont'd)

- If the change involves the rearrangement of an existing High Capacity Service or an existing multiplexed High Capacity Service into a greater bit rate High Capacity Service, into an optical fiber interface arrangement, into a FairPoint Enterprise SONET Private Network Service or into Switched Access Service Interface Group 9, a Digital to Digital Rearrangement Charge as set forth in 30.7.9(D) following for price band charges and 31.7.9(D) following for all other charges will apply for each service reconfigured. No charge applies to the multiplexed services on the existing High Capacity Service unless the customer changes service types, in which case the appropriate nonrecurring charge for each change will apply.

- If the change involves the rearrangement of an existing Telephone Company provided High Capacity Service or an existing Telephone Company provided multiplexed High Capacity Service into a Telephone Company provided High Capacity under an Expanded Interconnection Arrangement, or from one Telephone Company provided Expanded Interconnection Arrangement to another within the same Telephone Company serving wire center, an Interconnection Rearrangement Charge as set forth in 31.7.9(D)(3)(a) following will apply for each service reconfigured.

7. Special Access Service (Cont'd)

7.4 Rate Regulations (Cont'd)

7.4.1 Types of Rates and Charges (Cont'd)

(C) Nonrecurring Charges (Cont'd)

(3) Service Rearrangements (Cont'd)

- If the change involves the rearrangement of a Telephone Company provided High Capacity provided under an Expanded Interconnection Arrangement to a Telephone Company provided High Capacity or multiplexed High Capacity Service, an Interconnection Rearrangement Charge as set forth in 31.7.9(D)(3)(b) following will apply for each service reconfigured.

- If the change involves the rearrangement of an IntelliBeam Broadband Transport (IBT) service that is terminated with a 2-fiber interface into an IBT service that is terminated with a 4-fiber interface or vice versa, a Fiber Interface Rearrangement Charge as set forth in Section 31.26.5(A)(5)(a) following applies.

- If the change involves the rearrangement of the manner a multiplexing node of IBT service is configured which involves a DS1 Port and/or a DS3/STS1 Port, a Multiplexing Node Mapping Rearrangement Charge as set forth in Section 31.26.5(A)(5)(b) following applies. An example of a change in service configuration on an IBT OC3 node would be a change in the mapping of an existing channel(s) on that node. For instance, if the existing channel on the IBT OC3 node is an STS1 that is DS3 mapped, the node could be rearranged such that the mapping for that STS1 is changed to 28 DS1s that are Virtual Tributary mapped (VT-1.5). In this case a Multiplexing Node Mapping Rearrangement Charge as set forth in Section 31.26.5(A)(5)(b) following applies. Service configuration options for IBT channels are delineated in Section 26.1.5(A) following. The Multiplexing Node Mapping Rearrangement Charge applies for each multiplexing node of the IBT service configured and not on a per channel basis within the IBT service.

- For all other changes, including the addition of optional features or BSEs without separate nonrecurring charges, a charge equal to a channel termination rate element nonrecurring charge. Only one such charge will apply per service, per change.

7. Special Access Service (Cont'd)

7.4 Rate Regulations (Cont'd)

7.4.1 Types of Rates and Charges (Cont'd)

(C) Nonrecurring Charges (Cont'd)

(3) Service Rearrangements (Cont'd)

- If the change involves the rearrangement of an entire central office multiplexing arrangement (i.e., Special Access Services and multiplexer) to Special Access Services provided to FairPoint Enterprise Network Reconfiguration Service network access ports (NRS ports), a Mux to NRS Rearrangement Charge applies provided that:

(a) the same wire center is maintained (i.e., the serving wire center of the Hub where the multiplexing function was performed is the same serving wire center of the Hub where the NRS function is performed); and

(b) the same speed and type of service is maintained; and

(c) all Service Discount Plan Termination Liability requirements are met if the services and/or multiplexer were included in a Service Discount Plan prior to rearranging to FairPoint Enterprise Network Reconfiguration Service. The regulations applicable for replacement of, or upgrade to, service within a Service Discount Plan are set forth in 7.4.10(C) following:

The Mux to NRS Rearrangement Charge will apply in lieu of all applicable nonrecurring charges associated with the installation of the Special Access Services provided to the NRS ports. Only 1 (one) such rearrangement charge will apply per multiplexing arrangement, regardless of the number of Special Access Services involved in the rearrangement. Nonrecurring charges will apply for each NRS port installed in conjunction with each Special Access Service. Nonrecurring charges for the NRS Network Access Ports are specified in Section 30.19 following for price band charges and 31.19 following for all other charges.

The Mux to NRS Rearrangement Charge is specified in Section 30.7.9 following for price band charges and 31.7.9 following for all other charges.

7. Special Access Service (Cont'd)

7.4 Rate Regulations (Cont'd)

7.4.1 Types of Rates and Charges (Cont'd)

(C) Nonrecurring Charges (Cont'd)

(3) Service Rearrangements (Cont'd)

- If the change involves the rearrangement of existing Special Access Service or multiplexed Special Access Service into a Special Access, no charge will apply to connect or groom the Special Access Service. No charge applies to the multiplexed Special Access Services unless the customer changes service types, in which case the appropriate nonrecurring charge for each change will apply.

- If the change involves the rearrangement of an 8 bit Advanced Uncompressed Digital Video Service into a 10 bit Advanced Uncompressed Digital Video Service, a charge equal to the nonrecurring charge for the subsequent addition of one 10 bit Additional Transmit or Additional Receive channel termination, as applicable, will apply.

- If the change involves the rearrangement of a two-point Advanced Broadcast Video Service* into an Advanced Broadcast Video Service provided on a point to Hub basis (i.e., from a customer designated premises to a Telephone Company Hub) at which the ABVS channel will be connected to other compatible ABVS channels, no charge will apply provided that the same point (i.e., customer designated premises) is maintained.

* ABVS availability is limited. See footnote in Section 7.2.14(B) for more details.

7. Special Access Service (Cont'd)

7.4 Rate Regulations (Cont'd)

7.4.1 Types of Rates and Charges (Cont'd)

(D) Early Termination Charges

Early Termination charges apply to Special Access Service which is provided under a term plan and disconnected in full or in part prior to the customer satisfying the selected term plan for the service. Unless otherwise specified for the specific Special Access Service, the early termination charge will be the calculated using the methods set forth in (1) and (2) following.

(1) For disconnects prior to the end of the selected term plan for which there is no term plan less than the actual time the service has been in effect, the Early Termination Charge is 100% of the applicable monthly rates for each month and fraction thereof in the balance of the term plan.

(2) For disconnects prior to the end of the selected term plan for which a term plan exists which is less than the actual time the service has been in effect, the Early Termination Charge is the lesser amount of (i) 100% of the applicable monthly rates for each month and fraction thereof in the balance of the selected term plan or (ii) the difference between the monthly rates for the highest term plan that could have been satisfied prior to disconnection of the service and the monthly rate for the selected term plan multiplied by the actual number of months the service has been in effect.

7. Special Access Service (Cont'd)

7.4 Rate Regulations (Cont'd)

7.4.2 Surcharge for Special Access Service

(A) General

In additional to the rates and charges described in 7.4.1 preceding, there is a monthly surcharge that applies to Special Access Service. The Special Access Surcharge compensates the Telephone Company for use of the local exchange network when Special Access Service is connected to a PBX or equivalent device which is capable of interconnecting the Special Access Service with local exchange service.

The Telephone Company will automatically bill the surcharge on each Special Access Service installed irrespective of whether the interconnection capability exists in the customer's premises equipment or in a Centrex type switch unless written certification is received from the customer certifying exemption status as set forth in (B) following.

(B) Special Access Surcharge Exemptions

The Special Access Service will be exempted from the surcharge if the customer provides the Telephone Company written certification that the Special Access Service termination is one of the following:

- an open-end termination in a Telephone Company switch of an FX line, including CCSA and CCSA-equivalent ONALS; or

- an analog channel termination that is used for radio or television program transmission; or

- a termination used for TELEX service; or

- a termination that by the nature of its operating characteristics could not make use of Telephone Company common lines; or

7. Special Access Service (Cont'd)

7.4 Rate Regulations (Cont'd)

7.4.2 Surcharge for Special Access Service (Cont'd)

(B) Special Access Surcharge Exemptions (Cont'd)

- a termination that interconnects either directly or indirectly to the local exchange network where the usage is subject to Carrier Common Line charges such as, where the Special Access Service accesses only FGA or CSL BSA and no local exchange lines, or Special Access Service between customer points of termination or Special Access Service connecting CCSA or CCSA-type equipment (inter-machine trunks); or

- a termination that the customer certifies to the Telephone Company is not connected to a PBX or other device capable of interconnecting the special access facility to a local exchange subscriber line; or

- a termination that the customer certifies to the Telephone Company is connected to a PBX or other device which, through either hardware or software restrictions, is not capable of interconnecting the special access facility to a local exchange subscriber line.

7. Special Access Service (Cont'd)

7.4 Rate Regulations (Cont'd)

7.4.2 Surcharge for Special Access Service (Cont'd)

(C) Exemption Certification

(1) Special Access Services which are terminated as set forth in (B) preceding will be exempted from the Special Access Surcharge if the customer provides the Telephone Company with a written notification certifying exemption. Such notification shall be provided by the customer (1) at the time the Special Access Service is ordered or installed; (2) at such time as the Special Access Service is reterminated to a device not capable of interconnecting to the local exchange network, or (3) at such time as the Special Access Service becomes associated with a Switched Access Service that is subject to Carrier Common Line charges.

(2) If written certification is not received at the time the Special Access Service is obtained, the surcharge will be applied. Exempt status will become effective on the certification date indicated by the customer, subject to the regulations in (D) following.

7. Special Access Service (Cont'd)

7.4 Rate Regulations (Cont'd)

7.4.2 Surcharge for Special Access Service (Cont'd)

(C) Exemption Certification (Cont'd)

(3) The exemption certification is to be provided by the customer ordering the service. The certification must be signed by the customer or authorized representative and include the category of exemption, as set forth in (B) preceding, for each termination, and the date which the exemption is effective.

(4) The customer shall also notify the Telephone Company when an exempted Special Access Service is changed or reterminated such that the exemption is no longer applicable.

(D) Crediting the Surcharge

The Telephone Company will cease billing the Special Access Surcharge when certification that the Special Access Service has become exempt from the surcharge, as set forth in (B) preceding is received. If the status of the Special Access Service was changed prior to receipt for the exemption certification, the Telephone Company will credit the customer's account, not to exceed ninety (90) days, based on the effective date of the change specified by the customer in the letter of certification.

ACCESS SERVICE

7. Special Access Service (Cont'd)

7.4 Rate Regulations (Cont'd)

7.4.2 Surcharge for Special Access Service (Cont'd)

(E) Application of Rates

(1) The monthly Special Access Surcharge applies to Special Access Services arranged, as set forth in (A) preceding, on a per voice equivalent basis as shown in the following example.

Special Access Service	Voice Grade Equivalent	Surcharge	Monthly Charge
Voice Grade	1 X	$25	$ 25.00
Wideband Analog Group Level	12 X	$25	300.00
DS1	24 X	$25	600.00
DS3	672 X	$25	16,800.00
OC3	2016 X	$25	50,400.00
OC12	8064 X	$25	201,600.00
OC48	32256X	$25	806,400.00

7. Special Access Service (Cont'd)

7.4 Rate Regulations (Cont'd)

7.4.2 Surcharge for Special Access Service (Cont'd)

(E) Application of Rates (Cont'd)

(2) In the case of multipoint Special Access Service, one Special Access Surcharge will apply for each termination at a customer designated premises except that no surcharge applies at the customer designated premises at which the Special Access Service is connected to the customer's interstate facilities.

For example, a multipoint Special Access Service connects three customer designated premises, A, B and C. Customer designated premises A is where the Special Access Service is connected to the customer's interstate facilities, and no Special Access Surcharge will apply to that termination. However, the Special Access Surcharge will apply, per termination, to customer designated premises B and C.

(3) The Telephone Company will bill the surcharge to the customer who orders the Special Access Service unless the Service is exempt as set forth in (B) preceding or as specified in (4) following.

(4) In the case of Special Access Service, IDSR, or DSR provided under a Shared Billing Arrangement, one Special Access Surcharge will apply for each derived service. In no case shall the total number of Special Access Surcharges applied exceed the total voice equivalency for the type of High Capacity, IDSR, or DSR service ordered.

7.4.3 Reserved for Future Use

7. Special Access Service (Cont'd)

7.4 Rate Regulations (Cont'd)

7.4.4 Minimum Periods

Except for the following services, the minimum period for all services is three months. The minimum period for optional features and functions or BSEs is the same minimum period as the associated Special Access Service, unless otherwise specified.

(A) For part-time and occasional Broadcast Video, Advanced Video and Program Audio services, the minimum period is one day (i.e., a continuous 24 hour period, not limited to a calendar day).

(B) For Advanced Uncompressed Digital Video Service, Advanced Broadcast Video Service, Serial Component Video Service, Fiber Based Multichannel Video Service and Supertrunking Transport Video Service, the minimum period is one year. The CODEC optional feature, available with 45 Mbps Digital Video Transport Service, has a minimum period of one year.

(C) For Channel Extension Service, the minimum period is three years.

(D) For service provided under a Commitment Discount Plan as set forth in Section 25.1 following, the minimum period is one year from the date that service is installed and is in lieu of the minimum period which would normally apply to that service. Commitment Discount Plan minimum period regulations are specified in Section 25.1.10 following.

(E) For DSR as set forth in Section 34.1 following, the minimum period is one year for the mileage and node rate elements and one month for the port rate elements.

(F) For IntelliBeam Optical Transport Service as set forth in 7.2.19 preceding, the minimum period is two years for the ring mileage, node, network optimization and SONET optical transport rate elements and three months for the data optical transport channel rate elements.

(G) For Facilities Management Service (FMS) as set forth in 7.2.16 preceding, the minimum period is one year when FMS is provided with the month-to-month billing option. This minimum period applies on a network basis when the entire FMS network is discontinued within the first twelve (12) months of service. When FMS is provided with term plan billing, the minimum period is satisfied through the application of termination liability as set forth in Section 7.2.16(G)(3) preceding. Additionally, the minimum billing for individual channels within the FMS network is one month.

(H) For Optical Network as set forth in 7.2.20(E) preceding, the minimum period is one year for all term plans, including Month-to-Month.

7. Special Access Service (Cont'd)

7.4 Rate Regulations (Cont'd)

7.4.4 Minimum Periods (Cont'd)

(I) For service provided under the National Discount Plan as set forth in Section 25.2 following, the minimum period for a Special Access DS3 Service or Special Access DS1 Service that is included in the National Discount Plan is specified in Section 25.2.8 following.

7. Special Access Service (Cont'd)

7.4 Rate Regulations (Cont'd)

7.4.5 Moves

A move involves a change in the physical location of one of the following:

- The Point of Termination at the customer's designated premises
- The customer's designated premises

The charges for the move are dependent on whether the move is to a new location within the same building or to a different building.

(A) Moves Within the Same Building

When the move is to a new location within the same building, the charge for the move will be an amount equal to one half of the applicable channel termination nonrecurring charge for the service affected as set forth in 7.4.1 preceding. There will be no change in the minimum period or Service Discount Plan requirements.

(B) Moves To A Different Building

Moves to a different building will be treated as a discontinuance and start of service and all associated nonrecurring charges will apply. New minimum period and/or Service Discount Plan requirements will be established for the new services. The customer will also remain responsible for satisfying all outstanding minimum period and/or termination liability charges for the discontinued service except as specified in 7.4.10(C)(5) following.

For 1.544 Mbps/DS1 High Capacity, 44.736 Mbps/DS3 High Capacity (excluding Short-Term DS3), or Facilities Management Service moves of a primary circuit termination from one Telephone Company Central Office to another Telephone Company Central Office, the customer may pay a Coordinated Retermination Charge in lieu of treating the move as a discontinuance and start of service. The Coordinated Retermination Charge applies per circuit or DS1/DS3 equivalent circuit reterminated. The Telephone Company will coordinate the work activities required in order to minimize the length of time the service being moved is unavailable. Monthly rates will apply as if the circuit remained in service with no disruption. There will be no change in minimum period requirements. No termination liabilities will apply except where the retermination eliminates chargeable services such as IOF mileage or primary premises Channel Terminations for which specific termination liabilities exist.

7. Special Access Service (Cont'd)

7.4 Rate Regulations (Cont'd)

7.4.6 Mileage Measurement

The mileage to be used to determine the monthly rate for the Channel Mileage is calculated on the airline distance between the locations involved, i.e.:

(i) the serving wire centers associated with two customer designated premises, except as set forth in 2.4.7(C) preceding;
(ii) a serving wire center associated with a customer designated premises and a Network Controller location or a Telephone Company Hub*;
(iii) a serving wire center associated with a customer designated premises and an Expanded Interconnection multiplexing location;
(iv) an Expanded Interconnection multiplexing location and a Telephone Company Hub* where multiplexing functions are performed;
(v) a serving wire center associated with a customer designated premises and a WATS Serving Office;
(vi) a wire center associated with an IDSR or DSR CO Node and a wire center associated with an IBT multiplexing node; or
(vii) two Telephone Company Hubs*.

The serving wire center associated with a customer designated premises is the serving wire center from which the customer designated premises would normally obtain dial tone.

Mileage is shown in Section 30.7 following for price band rates and 31.7 following for all other rates in terms of mileage bands. Except as specified otherwise, there are two rates that apply per band, i.e., a fixed rate per band and a rate per mile. To determine the rate to be billed, first compute the mileage using the V&H coordinates method, as set forth in the NATIONAL EXCHANGE CARRIER ASSOCIATION, INC. TARIFF F.C.C. NO. 4, then find the band into which the computed mileage falls and apply the rates shown for that band. When the calculation results in a fraction of a mile, always round up to the next whole mile before determining the mileage band and applying the rates.

* Includes connection to or between locations where IntelliBeam Broadband Transport (IBT) multiplexing capability occurs as described in Section 26.1.5(B)(3) following.

7. Special Access Service (Cont'd)

7.4 Rate Regulations (Cont'd)

7.4.6 Mileage Measurement (Cont'd)

When Hubs are involved, mileage is computed and rates applied separately for each section of the Channel Mileage, i.e., (i) customer designated premises serving wire center to Hub, (ii) Hub to Hub, and/or (iii) Hub to customer designated premises serving wire center, Expanded Interconnection multiplexing node or virtual collocation arrangement*.

However, when any service is routed through a Hub for purposes other than customer specified bridging, multiplexing, grooming, or Vertical Service (i.e., NRS or FRS), rates will be applied only to the distance calculated between the serving wire centers associated with the customer designated premises.

Mileage measurement for DSR or IOTS is calculated as the total airline distance between nodes rounded up to the nearest mile as described in Sections 34.1 following and 7.2.19 preceding, respectively. For example, if the total mileage between all nodes is 20.4 miles, the mileage is calculated based on 21 miles.

7.4.7 Facility Hubs*

A customer has the option of ordering Voice Grade facilities or digital high capacity facilities (i.e., DS1, DS1C or DS3) to a facility Hub for channelizing to individual services requiring lower capacity facilities (e.g., Telegraph Grade, Voice Grade, Program Audio, etc.).

Different locations may be designated as Hubs for different facility capacities, e.g., multiplexing from digital to digital may occur at one location while multiplexing from digital to analog may occur at a different location. Locations (wire centers) that provide multiplexing of High Capacity Services have been designated as Intermediate Hubs, Super-Intermediate Hubs or Terminus Hubs (described in 2.6. preceding). When ordering, the customer will specify the desired multiplexing Hub(s), as applicable, selected from the NATIONAL EXCHANGE CARRIER ASSOCIATION, INC., TARIFF F.C.C. NO. 4. This tariff identifies the types(s) of multiplexing or grooming functions which are available, the serving wire centers at which they are available and the serving wire centers that subtend High Capacity DS3 to DS1 and DS1 to Voice multiplexing Hubs. Multiplexing of (IBT) Services are described in Section 26.1.5 following.

* Includes connection to or between locations where IBT multiplexing capability occurs as described in Section 26.1.5(B)(3) following.

7. Special Access Service (Cont'd)

7.4 Rate Regulations (Cont'd)

7.4.7 Facility Hubs* (Cont'd)

Some of the types of multiplexing or grooming available include the following:

- from higher to lower bit rate

- from higher to lower bandwidth

- from digital to voice frequency channels

End to end services may be provided on channels of these facilities to a Hub. The transmission performance for the end to end service provided between customer designated premises will be that of the lower capacity or bit rate. For example, when a 1.544 Mbps facility is multiplexed to voice frequency channels, the transmission performance of the channelized services will be Voice Grade, not High Capacity.

The Telephone Company will commence billing the monthly rate for the facility to the Hub on the date specified by the customer on the service order. Individual services utilizing these facilities may only be ordered and/or installed subsequent to the installation of the facility to the Hub. The customer will be billed for a Voice Grade, high capacity or FES digital Channel Termination, Channel Mileage (when applicable), and the multiplexer at the time the facility is installed. Individual service rates (by service type) will apply for a Channel Termination and additional Channel Mileage (as required) for each channelized service. These will be billed to the customer as each individual service is installed.

* Includes connection to or between locations where IntelliBeam Broadband Transport (IBT) multiplexing capability occurs as described in Section 26.1.5(B)(3) following.

7. Special Access Service (Cont'd)

7.4 Rate Regulations (Cont'd)

7.4.7 Facility Hubs* (Cont'd)

Cascading multiplexing or grooming occurs when a high capacity digital channel is de-multiplexed to provide channels with a lesser capacity and one of the lesser capacity channels is further de-multiplexed or groomed. For example, a DS1 facility is de-multiplexed to twenty four Voice Grade channels and then one of the Voice Grade channels is further de-multiplexed to individual Telegraph Grade channels.

When cascading multiplexing is performed, whether in the same or a different Hub, a charge for the additional multiplexing unit also applies. When cascading multiplexing is performed at different Hubbing locations, Channel Mileage rates and Mid-link nonrecurring charges also apply between the Hubs.

* Includes connection to or between locations where IntelliBeam Broadband Transport (IBT) multiplexing capability occurs as described in Section 26.1.5 following.

7. Special Access Service (Cont'd)

7.4 Rate Regulations (Cont'd)

7.4.7 Facility Hubs* (Cont'd)

A ThruPath Service connection occurs when a channel which has been derived from one multiplexed or groomed facility is interconnected with a channel which has been derived from a different multiplexed or groomed facility of the same bit rate. When the ThruPath Service connection involves IDSR, DSR, or an IntelliBeam Broadband Transport (IBT) multiplexing node, those services must use symmetrical port combinations. ThruPath Service connections may not be associated with asymmetrical port combinations of an IDSR, DSR, or IBT multiplexing node. The two derived channels are interconnected to create a single channel of a lesser capacity between the two multiplexed or groomed facilities as follows.

- DigiRoute℠ digital service II between two multiplexed 1.544 Mbps High Capacity Services
- 1.544 Mbps High Capacity Services between two 44.736 Mbps High Capacity Services
- 1.544 Mbps High Capacity Service or FES DS1 between an IDSR node, a DSR node, or multiplexed IBT and a multiplexed 44.736 Mbps High Capacity facility or groomed FES DS3 facility.
- DS3, FES DS3 or IBT OC3/OC3c, OC12/OC12c or OC48/OC48c between two IDSR or DSR services of higher capacity.
- IBT OC3/OC3c or OC12/OC12c between two multiplexed IBT Services of a higher capacity.
- FES DSO, SDA, Voice or FDS1 between two Special Access groomed DS1 facilities
- FES DS1 between two Special Access multiplexed or groomed DS3 facilities
- 44.736 Mbps High Capacity Service between two Optical Line Multiplexers associated with two 44.736 Mbps High Capacity Services, each of which are provided with the optical fiber interface option

* Includes connection to or between locations where IBT multiplexing capability occurs as described in Section 26.1.5 following.

7. Special Access Service (Cont'd)

7.4 Rate Regulations (Cont'd)

7.4.7 Facility Hubs* (Cont'd)

For example, two separate DS3 facilities are each de-multiplexed or groomed down to twenty eight DS1 channels and a DS1 channel from one multiplexed or groomed DS3 facility is interconnected with a DS1 channel from the other DS3 multiplexed or groomed facility to create a single DS1 channel between the two multiplexed facilities.

Example: Through-connection of multiplexed facilities

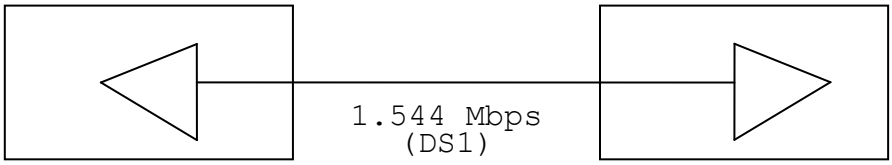

Intermediate Hub
(DS3 to DS1 Multiplexing
or grooming)

Intermediate Hub
(DS3 to DS1 Multiplexing
or grooming)

In addition to the channel mileage rates for the lesser capacity channel arranged between the two Hubs or between the Hub and either an IDSR or DSR central office node, a nonrecurring charge (Thrupath Connection Charge) applies. The ThruPath Connection Charge applies whether the Hubs or Hub and IDSR or DSR central office node are located in the same or different wire centers. Except for the Telephone Company hub locations set forth below, High Capacity ThruPath Service connections* are available at or between (i) all Intermediate or Super-Intermediate Hubs; or (ii) all IBT multiplexing nodes; or (iii) an Intermediate or Super-Intermediate Hub and either an IDSR or DSR central office node or IBT multiplexing node.

- Essex Junction, VT

* Includes connection to or between locations where IntelliBeam Broadband Transport (IBT) multiplexing capability occurs as described in Section 26.1.5(B)(3) following.

7. Special Access Service (Cont'd)

7.4 Rate Regulations (Cont'd)

7.4.7 Facility Hubs* (Cont'd)

The Telephone Company will work cooperatively with the customer in determining the routing required for Video, Advanced Video and Program Audio services. A customer can order full-time and/or part-time service(s) between customer designated premises or between customer designated premises and a Hub and will be billed accordingly at the rates set forth in 30.7.4 or 30.7.5 following for price band rates and 31.7.4 or 31.7.5 following for all other rates for the full-time or part-time service, as appropriate.

At the request of a customer, compatible full-time and/or part-time services provided to a Hub may be connected together in the following configurations: full-time to full-time, full-time to part-time or part-time to part-time. The customer will be charged for each such connection made at the rates for Other Labor as set forth in 31.13 following. The rates that apply for the service between each customer-designated premises and the Hub are a Channel Termination and Channel Mileage, if applicable, and any associated optional features and functions or BSEs.

7.4.8 Shared Use Digital High Capacity Services

Shared use occurs when Special Access Service and Switched Access Service including CCSA are provided over the same High Capacity facilities through a common interface. The regulations governing Shared Use Arrangements are set forth in Section 5.2.7 preceding.

* Includes connection to or between locations where IntelliBeam Broadband Transport (IBT) multiplexing capability occurs as described in Section 26.1.5(B)(3) following.

7. Special Access Service (Cont'd)

7.4 Rate Regulations (Cont'd)

7.4.9 Service-Specific Rate Regulations

(A) 44.736 Mbps High Capacity Service

Standard rates and charges apply to 44.736 Mbps Service, and 44.736 Mbps Service provided with an optical fiber interface option (i.e., 135 Mbps capacity, 405 Mbps capacity and 560 Mbps capacity), as specified in 30.7 following for price band rates and charges and 31.7 following for all other rates and charges.

(1) Channel Termination Monthly Rates

The channel termination rate structure for 44.736 Mbps Service (electrical and optical fiber interface option) differs based upon whether or not the channel termination is at a primary or secondary premises. A Primary Premises is a customer designated premises where a 44.736 Mbps Service channel is either originated or terminated. Only one end of the channel can be a primary premises. A Secondary Premises is any customer designated premises other than the primary premises.

If one end of a 44.736 Mbps Service channel is either connected to or derived from a higher speed facility (e.g., 560 Mbps capacity 44.736 Mbps High Capacity Service with OFIO, IDSR, or DSR), the customer location with the 44.736 Mbps standard channel termination is classified as a Secondary Premises. If one end of a 44.736 Mbps Service is connected to a multiplexing node or virtual collocation arrangement, the location with the standard channel termination is classified as a Secondary Premises. When a 44.736 Mbps Service channel is provided with the Alternate Serving Wire Center optional feature, the alternately routed channel termination is considered to be at either a primary premises or a secondary premises, depending on the classification of the customer designated premises of the associated 44.736 Mbps Service channel termination.

7. Special Access Service (Cont'd)

7.4 Rate Regulations (Cont'd)

7.4.9 Service-Specific Rate Regulations (Cont'd)

(A) 44.736 Mbps High Capacity Service (Cont'd)

(1) Channel Termination Monthly Rates (Cont'd)

Monthly rates for 44.736 Mbps High Capacity Service channel terminations at a primary premises apply on a tapered schedule as et forth in 30.7 following for price band rates and 31.7 following for all other rates. The rate to be billed for each channel termination is based on a count of the total eligible Switched and Special Access channel terminations that are in service and in billing at the end of the bill period whether provided on a month to month basis, under one or more discount plans or a combination of both.

7. Special Access Service (Cont'd)

7.4 Rate Regulations (Cont'd)

7.4.9 Service-Specific Rate Regulations (Cont'd)

(A) 44.736 Mbps High Capacity Service (Cont'd)

(1) Channel Termination Monthly Rates (Cont'd)

The following Switched and Special Access channel termination rate elements are eligible for inclusion in the Telephone Company's monthly count:

- 44.736 Mbps High Capacity Special Access Service standard channel terminations (electrical) at a primary premises as described herein;
- 44.736 Mbps High Capacity Special Access Service standard channel terminations (optical) at a primary premises;

7. Special Access Service (Cont'd)

7.4 Rate Regulations (Cont'd)

7.4.9 Service-Specific Rate Regulations (Cont'd)

(A) 44.736 Mbps High Capacity Service (Cont'd)

(1) Channel Termination Monthly Rates (Cont'd)

Once a month, the Telephone Company will count all eligible 44.736 Mbps High Capacity Special Access Services that are in service at a primary premises. The Telephone Company will then count all eligible DS3 Switched Access Entrance Facility channel terminations that are in service at that location as specified in 6.7.1(A) preceding. The results are added to obtain the total count for a particular customer designated premises and determine the applicable rate band. This step is repeated for each customer designated premises.

When a facility carries both Special Access and Switched Access Service under a Shared Use Arrangement as set forth in 5.2.7 preceding, each channel termination will be counted as either Special Access or Switched Access only, depending on the type of facility originally ordered, but the total number of such circuits will be counted in determining the rate band charged.

The Telephone Company will conduct a count on the first day of each month to use for the next month's billing.

For example, the Telephone Company's total DS3 count for a customer on the first day of December is 16. A customer has ten eligible High Capacity 44.736 Mbps Special Access Service channel terminations and six eligible DS3 Switched Access Entrance Facilities in service at its premises. The applicable rate band for each category (Special or Switched) is band 16. In December, each of the ten High Capacity 44.736 Mbps Special Access Services is billed at the then effective rate under band 16 (for Special Access) and each of the six DS3 Switched Access Entrance Facilities is billed at the then effective rate under band 16 (for Switched Access).

The rate band determined by the last count taken shall be used to calculate all charges incurred by and credits due to the customer for 44.736 Mbps High Capacity Special Access Service channel terminations established or discontinued during the preceding billing period. The count will not be adjusted for any reason for service order activity occuring after the count is made, including services that were installed prior to the count but were not in billing when the count was taken.

A secondary premises channel termination monthly rate applies to channel terminations at secondary premises locations.

7. Special Access Service (Cont'd)

7.4 Rate Regulations (Cont'd)

7.4.9 Service-Specific Rate Regulations (Cont'd)

(A) 44.736 Mbps High Capacity Service (Cont'd)

(2) Channel Mileage Measurement

Channel Mileage Measurement for 44.736 Mbps Service and 44.736 Mbps Service with an optical interface (i.e., 135 Mbps capacity, 405 Mbps capacity and 560 Mbps capacity) is specified in 7.4.6 preceding.

7. Special Access Service (Cont'd)

7.4 Rate Regulations (Cont'd)

7.4.9 Service-Specific Rate Regulations (Cont'd)

(B) Fiber Based Multichannel Video Service (MVS) and Advanced Uncompressed Digital Video Service (AUDVS)

Standard rates and charges apply to MVS and AUDVS as specified in 30.7.5 and 30.7.15 following, respectively, for price band rates and charges and 31.7.5 and 31.7.15 following for all other rates and charges.

(1) Channel Termination Monthly Rates

For Transmit and Receive channel terminations provided on a first and additional basis, the First channel termination monthly rate applies to the first video signal of each channel installed at a customer designated premises. An Additional channel termination monthly rate applies for each additional video signal added to the same channel at the same customer designated premises. The customer may disconnect the Additional channel terminations in any order desired. However, the First channel termination monthly rate remains in effect until all video signals on the channel are disconnected.

For the AUDVS Dual Transmit channel termination, the monthly rate applies per point of termination, regardless of the number of video signals provided over

(2) Channel Mileage Measurement

Channel Mileage monthly rates consist of a Fixed and Per Mile rate which apply to each channel regardless of the number the Channel Terminations provided over the channel. Channel Mileage measurement is as specified in 7.4.6 preceding.

7. Special Access Service (Cont'd)

7.4 Rate Regulations (Cont'd)

7.4.9 Service-Specific Rate Regulations (Cont'd)

(B) Fiber Based Multichannel Video Service (MVS) and Advanced Uncompressed Digital Video Service (AUDVS) (Cont'd)

(3) Optional Features and Functions

Nonrecurring charges apply to optional features and functions. Except for Video Bridging, MVS Additional Separate Audio Signals, MVS BTSC Stereo Audio Signals and MVS Rf Subcarrier Transport, the charge applies whether the feature or function is installed coincident with the initial installation of service or at any time subsequent to the installation of service. For Video Bridging, MVS Additional Separate Audio Signals, MVS BTSC Stereo Audio Signals and MVS Rf Subcarrier Transport, the charge applies only when the feature or function is installed at any time subsequent to the installation of service.

For the MVS Rf Subcarrier Transport optional feature, the nonrecurring charge is further subject to a first and additional nonrecurring rate structure. A First Nonrecurring Charge will apply, per option, for the initial optional feature ordered. An Additional Nonrecurring Charge will apply, per option, for each additional optional feature which is ordered at the same time on the same Access Order, for the same due date and between the same premises, provided the optional feature is identical to the initial optional feature. The Rf Subcarrier Transport charge applies per point of termination.

7. Special Access Service (Cont'd)

7.4 Rate Regulations (Cont'd)

7.4.9 Service-Specific Rate Regulations (Cont'd)

(C) Channel Extension Service

Rates and charges apply for Channel Extension Service as specified in Section 30.7.17 following for price band rates and charges and 31.7.17 following for all other rates and charges. Unique rate elements will apply depending on the backbone architecture in use by the customer. Such charges are shown as a 3-year rate or a 5-year rate and apply on a monthly basis during the term selected by the customer. Channel termination, channel mileage, redundant path switching and repeater rates and charges apply as set forth in (1) through (4) following. When service is disconnected in whole or in part prior to completion of the 3-year or 5-year term plan, as applicable, early termination charges apply as set forth in Section 7.4.1(D) preceding.

(1) Channel Termination Monthly Rates and Nonrecurring Charges

The First Channel Termination Monthly Rate and Nonrecurring Charge applies to the first channel termination installed at a customer designated premises. When more than one Channel Extension Service channel terminations using the same backbone architecture are provided to a customer designated premises at which a First Channel Termination has already been provided, the Additional Channel Termination Monthly Rate and Nonrecurring Charge applies to each additional channel termination provided to that same customer designated premises. The Additional Channel Termination Monthly Rate and Nonrecurring Charge applies whether or not the additional service(s) are ordered at the same time, are on the same or different Access Order or are scheduled for the same or different due dates.

7. Special Access Service (Cont'd)

7.4 Rate Regulations (Cont'd)

7.4.9 Service-Specific Rate Regulations (Cont'd)

(C) Channel Extension Service (Cont'd)

(2) Channel Mileage Monthly Rates

Channel Mileage for Channel Extension Service is calculated on the airline distance between the serving wire centers associated with the two customer designated premises involved. The rates for channel mileage are shown in terms of mileage bands. The manner in which the channel mileage is calculated and rates apply are as set forth in Section 7.4.6 preceding.

(3) Repeater Monthly Rates

When required to meet the transmission requirements for the service using the repeater architecture, a First Repeater monthly rate applies to the first repeater placed in a Telephone Company wire center. When more than one Channel Extension Service repeater is provided in the same wire center in which a First Repeater has already been provided, an Additional Repeater monthly rate applies to each additional repeater provided to that same wire center.

(4) Redundant Path Switching

The Redundant Path Switching monthly rate applies when path redundancy is provided in the network for the service using the DWDM backbone architecture.

(D) IntelliBeam Optical Transport Service (IOTS)

IOTS is subject to Category I and Category II rates as determined in the application of rates and charges set forth in 7.2.19(D)(10) preceding.

7. Special Access Service (Cont'd)

7.4 Rate Regulations (Cont'd)

7.4.10 Service Discount Plan

(A) General

Service Discount Plans are provided with Rate Stability (defined in (G) following) for these services:

- IntelliBeam Dedicated SONET Ring

Service Discount Plans are provided with Base Rates only (without Rate Stability) as set forth in (G) following for these services:

- 44.736 Mbps Service

Service Discount Plans are available for the following types of services. Neither Rate Stability or Base Rates apply to these services:

- DIGIROUTE℠ digital service II
- 1.544 Mbps Service
- DOVROUTE℠ Service
- FairPoint Enterprise Network Reconfiguration Service+
- Broadcast Video Service
- Enterprise SONET Service
- Advanced Uncompressed Digital Video Service
- Serial Component Video Service
- Supertunking Transport Video Service
- Fiber Based Multichannel Video Service
- IntelliBeam Dedicated SONET Ring (IDSR in Section 26.1 only)^

+ Denotes a Vertical Service.

^ Service availability limited. See footnote on Page 26-1.

7. Special Access Service (Cont'd)

7.4 Rate Regulations (Cont'd)

7.4.10 Service Discount Plan (Cont'd)

(A) General (Cont'd)

A customer with one or more services has the option of requesting, at any time, a Service Discount Plan for some or all services of the same type and, in the case of certain digital services, of the same speed (i.e., 2.4, 4.8, 9.6, or 56.0 kbps Digital Data Services, 1.544 Mbps and 44.736 Mbps Service with an optical fiber interface option). In the case of FES FDDI Service, all Channel Termination and Channel Mileage rate elements associated with a FES FDDI Service must be under the same Service Discount Plan. In the case of 1.544 Mbps and 44.736 Mbps Service, the services must be provided within the same Telephone Company operating territory. In addition, when a customer requests a Service Discount Plan for a 1.544 Mbps or 44.736 Mbps High Capacity or FES DS1 or DS3 Special Access Service provided under a Shared Use Agreement, the equivalent Switched Access Service Discount Plan and its terms and conditions as specified in Section 6.7.16 preceding, will apply to the Switched Access channels provided over the Shared Use facility. For all other services, the services must be billed on the same billing account.

When the customer has elected a Commitment Discount Plan as set forth in Section 25.1 following, a Service Discount Plan will not be established for any service level which is included in a Commitment Discount Plan. A Service Discount Plan may be established for service levels which are not included in the Commitment Discount Plan subject to the regulations specified in Section 25.1.2 following.

When the customer has elected a National Discount Plan (NDP) as set forth in Section 25.2 following, a Service Discount Plan will not be established for any Special Access DS3 Service or Special Access DS1 Service during the time that the customer subscribes to NDP.

7. Special Access Service (Cont'd)

7.4 Rate Regulations (Cont'd)

7.4.10 Service Discount Plan (Cont'd)

(A) General (Cont'd)

When a Host Customer with an existing multiplexed High Capacity or IntelliBeam Dedicated SONET Ring requests a Shared Billing Arrangement as set forth in Section 7.2.9(D)(6) and a Service Discount Plan is currently in effect on the portion of the multiplexed or groomed service that will be billed to a Service User, the Service User will have the option of (1) continuing the existing discount plan and terms and conditions in effect as set forth in Section 7.4.10(C)(1) following or, (2) requesting a new Service Discount Plan for a commitment period equal to or longer than the original commitment period at the then effective discount percentage. If the Service User does not agree to (1) or (2) preceding, the existing customer will be responsible for payment of any termination liability associated with the portion of service that will be billed to the Service User prior to the establishment of a Shared Billing Arrangement.

When requesting a Service Discount Plan, the customer must specify which services are to be included in the Service Discount Plan. When requesting any activity set forth in (C)(2) through (6) following, the customer must specify by circuit identification which services are affected.

7. Special Access Service (Cont'd)

7.4 Rate Regulations (Cont'd)

7.4.10 Service Discount Plan (Cont'd)

(B) Description

A Service Discount Plan applies to:

- Special Access Service Standard Channel Terminations, Channel Mileage and applicable Optional Features and Functions or BSEs monthly or base rates, as set forth in 30.7 following for price band rates and 31.7 following for all other rates;
- FairPoint Enterprise Network Reconfiguration Service Network Access Ports monthly rates as set forth in 30.19 following for price band rates and 31.19 following for all other rates;
- IntelliBeam Dedicated SONET Ring SONET Distribution Channels, Channel Mileage, Nodes and Ports as set forth in 30.26 following for price band rates and 31.26 following for all other rates;
- FairPoint Enterprise Service Fiber Distributed Data Interface Channel Terminations and Channel Mileage as set forth in 30.23 following for price band rates and 31.23 following for all other rates;
- and to Enterprise SONET Service Ring Transport Services as set forth in Section 30.26 following for price band rates and 31.26 following for all other rates.

For services provided with Rate Stability as set forth in (G) following, a fixed discount percentage is applied to the Rate Stability Base Rates specified in Section 30.7 following for price band rates and 31.7 following for all other rates.

For services provided with Base Rates (without rate stability), a discount percentage is applied to the Base Rates specified in Section 30.7 following for price band rates and 31.7 following for all other rates.

For all other services, the month-to-month rates for such services are reduced by a fixed percentage.

The amount of the discount percentage differs based on the length of the commitment period selected by the customer and the type of service. The customer must specify the number of months selected as the commitment period for its Service Discount Plan. For existing Service Discount Plans with commitment periods of 2, 3, 4, 5, 7 or 10 years, the commitment period will be converted to a commitment period of 24, 36, 48, 60, 84, or 120 months, respectively.

7. Special Access Service (Cont'd)

7.4 Rate Regulations (Cont'd)

7.4.10 Service Discount Plan (Cont'd)

(B) Description (Cont'd)

The discount percentage is applied to the currently effective monthly or base rates. Except as set forth in (G) following, such rates may change during the commitment period, thereby causing an increase or decrease in the rates applicable to the customer.

Except for services provided with Rate Stability, in the event that the Telephone Company initiates a rate increase and the total discounted monthly rate for the affected service increases by eight percent (8%) or more, the customer may cancel its service discount plan for the affected service without termination liability as set forth in (C) following. The customer must exercise its option to cancel the service discount plan for the affected service within thirty (30) days of the date of the effective rate increase.

The discount percentage will not be subject to Telephone Company initiated decreases during that period. However, if the Telephone Company initiates an increase in the discount percentage during that period, that increased discount will be used to determine the rates applicable to the customer.

7. Special Access Service (Cont'd)

7.4 Rate Regulations (Cont'd)

7.4.10 Service Discount Plan (Cont'd)

(B) Description (Cont'd)

(1) Service Commitment Periods and Discount Percentages Applicable to Monthly Rates

Service Discount Plans are not applicable to Optional Features and Functions or BSEs except as specified following. Optional Features and Functions or BSEs associated with the service will have the same commitment period as the corresponding service. Optional Features and Functions or BSEs may be added subsequent to the establishment of the service discount plan on the corresponding service, subject to the provisions set forth in (D) following for Additions of Service.

(a) DS3 Level Services
High Capacity 44.736 Mbps – Optical Fiber Interface*

- Channel Terminations and Channel Mileage

24 months - 35 months	5%#
36 months - 47 months	10%#
48 months - 59 months	25%#
60 months - 71 months	35%#
84 months - 95 months	40%#
120 months – 131 months	40%#

* When ordered in conjunction with ESS, the commitment period for the Special Access Service must be the same commitment period as the corresponding ESS as specified in (j) following.

\# Service provided with Base Rates. The percentage discount is applied to the base rate set forth in 30.7 following for price band rates and 31.7 following for all other rates.

7. Special Access Service (Cont'd)

7.5 Rate Regulations (Cont'd)

7.4.11 Service Discount Plan (Cont'd)

(B) Description (Cont'd)

(1) Service Commitment Periods and Discount Percentages Applicable to Monthly Rates

(a) DS3 Level Services
High Capacity 44.736 Mbps – Optical Fiber Interface *(Cont'd)

- DS3 to DS1 Multiplexer

24 months - 35 months	5%#
36 months - 47 months	10%#
48 months - 59 months	25%#
60 months - 71 months	35%#
84 months - 95 months	40%#
120 months – 131 months	40%#

* When ordered in conjunction with ESS, the commitment period for the Special Access Service must be the same commitment period as the corresponding ESS as specified in (j) following.

Service provided with Base Rates. The percentage discount is applied to the base rate set forth in 30.7 following for price band rates and 31.7 following for all other rates.

7. Special Access Service (Cont'd)

7.4 Rate Regulations (Cont'd)

7.4.10 Service Discount Plan (Cont'd)

(B) Description (Cont'd)

(1) Service Commitment Periods and Discount Percentages Applicable to Monthly Rates. (Cont'd)

(a) DS3 Level Services
High Capacity 44.736 Mbps – Optical Fiber Interface *(Cont'd)

- Alternate Serving Wire Center

24 months - 35 months	5%#
36 months - 47 months	10%#
48 months - 59 months	25%#
60 months - 71 months	35%#
84 months - 95 months	40%#
120 months – 131 months	40%#

* When ordered in conjunction with ESS, the commitment period for the Special Access Service must be the same commitment period as the corresponding ESS as specified in (j) following.

Service provided with Base Rates. The percentage discount is applied to the base rate set forth in 30.7 following for price band rates and 31.7 following for all other rates.

7. Special Access Service (Cont'd)

7.4 Rate Regulations (Cont'd)

7.4.10 Service Discount Plan (Cont'd)

(B) Description (Cont'd)

(1) Service Commitment Periods and Discount Percentages Applicable to Monthly Rates. (Cont'd)

(a) DS3 Level Services
High Capacity 44.736 Mbps - Electrical Interface*

- Channel Terminations and Channel Mileage

24 months - 35 months	5%#
36 months - 47 months	10%#
48 months - 59 months	25%#
60 months - 71 months	35%#
84 months - 95 months	40%#
- Alternate Serving Wire Center 24 months - 35 months	5%#
36 months - 47 months	10%#
48 months - 59 months	25%#
60 months - 71 months	35%#
84 months - 95 months	40%#

* When ordered in conjunction with ESS, the commitment period for the Special Access Service will have the same commitment period as ESS as specified in (j) following.

\# Service provided with Base Rates. The percentage discount is applied to the base rate set forth in Section 30.7 following for price band rates and 31.7 following for all other rates.

7. Special Access Service (Cont'd)

7.4 Rate Regulations (Cont'd)

7.4.10 Service Discount Plan (Cont'd)

(B) Description (Cont'd)

(1) Service Commitment Periods and Discount Percentages Applicable to Monthly Rates (Cont'd)

(a) DS3 Level Services (Cont'd)
High Capacity 44.736 Mbps - Electrical Interface* (Cont'd)

- DS3 to DS1 Multiplexer

24 months - 35 months	5%#
36 months - 47 months	10%#
48 months - 59 months	25%#
60 months - 71 months	35%#
84 months - 95 months	40%#

* When ordered in conjunction with ESS, the commitment period for the Special Access Service will have the same commitment period as the corresponding ESS as specified in (j) following.

\# Service provided with Base Rates. The percentage discount is applied to the base rate set forth in Section 30.7 following for price band rates and 31.7 following for all other rates.

7. Special Access Service (Cont'd)

7.4 Rate Regulations (Cont'd)

7.4.10 Service Discount Plan (Cont'd)

(B) Description (Cont'd)

(1) Service Commitment Periods and Discount Percentages Applicable to Monthly Rates (Cont'd)

(b) DS1 Level Services
High Capacity 1.544 Mbps *

- Channel Terminations and Channel Mileage

24 months - 35 months	15%
36 months - 47 months	25%
48 months - 59 months	30%
60 months - 71 months	35%
84 months - 95 months	40%

- Alternate Serving Wire Center

24 months - 35 months	15%
36 months - 47 months	25%
48 months - 59 months	30%
60 months - 71 months	35%
84 months - 95 months	40%

* When ordered in conjunction with ESS, the commitment period for the Special Access Service will have the same commitment period as the corresponding ESS as specified in (h) following.

7. Special Access Service (Cont'd)

7.4 Rate Regulations (Cont'd)

7.4.10 Service Discount Plan (Cont'd)

(B) Description (Cont'd)

(1) Service Commitment Periods and Discount Percentages Applicable to Monthly Rates (Cont'd)

(c) DS0 Level Services

DIGIROUTE℠ digital service II

- Channel Terminations and Channel Mileage

24 months - 35 months	5%
36 months - 47 months	10%
48 months - 59 months	15%
60 months - 71 months	20%
84 months - 95 months	25%

- Bridging

24 months - 35 months	5%
36 months - 47 months	10%
48 months - 59 months	15%
60 months - 71 months	20%
84 months - 95 months	25%

DOVROUTE℠ Service

- Channel Terminations and Channel Mileage

36 months - 47 months	10%
60 months - 71 months	20%

7. Special Access Service (Cont'd)

7.4 Rate Regulations (Cont'd)

7.4.10 Service Discount Plan (Cont'd)

(B) Description (Cont'd)

(1) Service Commitment Periods and Discount Percentages Applicable to Monthly Rates (Cont'd)

(d) Video Services

Broadcast Video

- Channel Terminations and Channel Mileage

36 months - 59 months	10%
60 months - 83 months	20%#
84 months - 95 months	30%*#

- Bridging Optional Feature

36 months - 59 months	10%
60 months - 83 months	20%
84 months - 95 months	30%*

Supertrunking Transport Video Service

- Channel Terminations and Channel Mileage

36 months - 59 months	10%
60 months - 83 months	20%
84 months - 95 months	35%
120 months - 131 months	40%

* Effective October 11, 2001, Broadcast Video Service will no longer be provided under a Service Discount Plan of 84 months – 95 months. Customers who are already subscribing to, or have on order, Broadcast Video Service with a commitment period of 84 months – 95 months may continue with service under this plan through the end of the commitment period, at which time the customer may renew under any other commitment period being offered at that time.

\# Not available on Premises to Hub or Premises to Port Channel Terminations.

7. Special Access Service (Cont'd)

7.4 Rate Regulations (Cont'd)

7.4.10 Service Discount Plan (Cont'd)

(B) Description (Cont'd)

(1) Service Commitment Periods and Discount Percentages Applicable to Monthly Rates (Cont'd)

(d) Video Services (Cont'd)

Fiber Based Multichannel Video

- Channel Terminations, Channel Mileage and Optional Features and Functions

36 months - 59 months	10%
60 months - 83 months	20%
84 months - 119 months	40%
120 months - 131 months	40%

Advanced Uncompressed Digital Video

- Channel Terminations, Channel Mileage and Optional Features and Functions

36 months - 59 months	10%
60 months - 71 months	20%

Serial Component Video Service

- Channel Terminations and Channel Mileage

36 months - 59 months	10%
60 months - 71 months	20%

7. Special Access Service (Cont'd)

7.4 Rate Regulations (Cont'd)

7.4.10 Service Discount Plan (Cont'd)

(B) Description (Cont'd)

(1) Service Commitment Periods and Discount Percentages Applicable to Monthly Rates (Cont'd)

(e) FairPoint Enterprise Network Reconfiguration Service

- DDS II Network Access Port

36 months - 47 months	10%
60 months - 71 months	20%

- 1.544 Mbps Network Access Port

36 months - 47 months	10%
60 months - 71 months	20%

- 44.736 Mbps Network Access Port

36 months - 47 months	10%
60 months - 71 months	20%
84 months - 95 months	30%

7. Special Access Service (Cont'd)

7.4 Rate Regulations (Cont'd)

7.4.10 Service Discount Plan (Cont'd)

(B) Description (Cont'd)

(1) Service Commitment Periods and Discount Percentages Applicable to Monthly Rates (Cont'd)

(f) FairPoint Enterprise FDDI Service

- Channel Terminations and Channel Mileage

24 months - 35 months	5% #
36 months - 47 months	10% #
48 months - 59 months	25% #
60 months - 71 months	35% #
84 months - 95 months	40% #
120 months - 131 months	40% #

Service provided with Rate Stability. The percentage discount is applied to the Rate Stability base rate set forth in Section 30.7 following for price band rates and 31.7 following for all other rates.

7. Special Access Service (Cont'd)

7.4 Rate Regulations (Cont'd)

7.4.10 Service Discount Plan (Cont'd)

(B) Description (Cont'd)

(1) Service Commitment Periods and Discount Percentages Applicable to Monthly Rates (Cont'd)

(g) IntelliBeam Dedicated SONET (IDSR) Ring ^

IDSR OC3, OC12, and OC48 Services

36 months - 47 months	10%*
48 months - 59 months	25%*
60 months - 71 months	35%*
84 months - 95 months	40%*

* Service provided with Rate Stability. The percentage discount is applied to the Rate Stability base rate set forth in Section 30.7 following for price band rates and 31.7 following for all other rates.

^ Service availability limited. See footnote on Page 26-1.

7. Special Access Service (Cont'd)

7.4 Rate Regulations (Cont'd)

7.4.10 Service Discount Plan (Cont'd)

(B) Description (Cont'd)

(1) Service Commitment Periods and Discount Percentages Applicable to Monthly Rates (Cont'd)

(h) Enterprise SONET Service (ESS)

- ESS DS1 Ring Transport

36 months	15%
60 months	35%

- ESS DS3 Ring Transport

36 months	15%
60 months	35%

7. Special Access Service (Cont'd)

7.4 Rate Regulations (Cont'd)

7.4.10 Service Discount Plan (Cont'd)

(C) Termination Liability

(1) General

A termination liability applies during the selected commitment period. Except as set forth in (2) through (6) following, if service is disconnected in full or in part prior to the end of the selected commitment period, the customer is liable for a termination liability charge. In addition, should a customer, prior to the end of the selected commitment period, request that some or all channels of a High Capacity or FES facility be used for Switched Access Service the terms and conditions specified in 6.7.16 preceding for the equivalent Switched Access discount plan will apply to such channels for the balance of the selected commitment period. Further, except as provided in (D) and (E) following, when a customer a Service Discount Plan prior to the end of the selected commitment period, the customer is liable for a termination liability charge.

The termination liability charge applies to each service, BSE, Optional Feature or Function, and Network Access Port, or, in the case of cancellation of a Service Discount Plan, to each service, BSE, Optional Feature or Function, and Network Access Port which had been included in the cancelled Service Discount Plan.

When the jurisdiction of a Special Access Service (line), NRS Network Access Port or Packet Switching Access Service (port) furnished under a Service Discount Plan is changed to intrastate, no termination liability charge applies provided the service (line or port) is furnished under an intrastate service discount plan.

ACCESS SERVICE

7. Special Access Service (Cont'd)

7.4 Rate Regulations (Cont'd)

7.4.10 Service Discount Plan (Cont'd)

(C) Termination Liability (Cont'd)

(1) General (Cont'd)

For the following services, the termination liability charge is calculated for the applicable Channel Termination, Channel Mileage, BSE, and Optional Feature or Function monthly rates as set forth in (a) following.

- Voice Grade Service
- Digital Data Service
- DOVROUTE℠ service

For the following services, the termination liability charge is calculated for the applicable Channel Termination, SONET Distribution Channel, Dedicated Channel Mileage, IDSR Node, BSE, and Optional Feature or Function monthly rates as set forth in (a) or (b) following. When calculating termination liability charges, the Telephone Company will apply the option that provides the customer with the lowest termination liability charge.

- DDS II
- 1.544 Mbps High Capacity Service*
- Advanced Uncompressed Digital Video Service
- Fiber Based Multichannel Video Service
- FairPoint Enterprise FDDI Service
- 44.736 Mbps High Capacity Service*
- Supertrunking Transport Video Service
- IntelliBeam Dedicated SONET Ring
- Broadcast Video Service

* When provided in conjunction with ESS Ring Transport Services, the termination liability charge is as set forth in (c) following in lieu of the termination liability charge as determined in (a) or (b), as applicable.

7. Special Access Service (Cont'd)

7.4 Rate Regulations (Cont'd)

7.4.10 Service Discount Plan (Cont'd)

(C) Termination Liability (Cont'd)

(1) General (Cont'd)

- For Enterprise SONET Service (ESS), the termination liability charge is calculated for the applicable ESS Ring Transport Service and the associated 1.544 Mbps or 44.736 Mbps Special Access Service as set forth in (c) following.

7. Special Access Service (Cont'd)

7.4 Rate Regulations (Cont'd)

7.4.10 Service Discount Plan (Cont'd)

(C) Termination Liability (Cont'd)

(1) General (Cont'd)

(a) Option 1

(i) IntelliBeam Dedicated SONET Ring (IDSR)

- For disconnects on or prior to the end of the minimum period and prior to the end of the selected commitment period, the termination liability charge is 17% of the applicable monthly rates for each month and fraction thereof remaining between the end of the minimum period and the end of the selected commitment period.

- For disconnects after the end of the minimum period but prior to the end of the selected commitment period and for cancellations prior to the end of the selected commitment period, the termination liability charge is 17% of the applicable monthly rates for each month and fraction thereof in the balance of the selected commitment period.

(ii) All Other Services

- For disconnects on or prior to the end of the minimum period and prior to the end of the selected commitment period, the termination liability charge for is 50% of the applicable monthly rates for each month and fraction thereof remaining between the end of the minimum period and the end of the selected commitment period.

- For disconnects after the end of the minimum period but prior to the end of the selected commitment period and for cancellations prior to the end of the selected commitment period, the termination liability charge is 50% of the applicable monthly rates for each month and fraction thereof in the balance of the selected commitment period.

(b) Option 2

- For disconnects on or prior to the end of the minimum period and prior to the end of the selected commitment period, the termination liability charge will be the difference between the full monthly rates and the discounted monthly rates for the period the service has been in effect.

7. Special Access Service (Cont'd)

7.4 Rate Regulations (Cont'd)

7.4.10 Service Discount Plan (Cont'd)

(C) Termination Liability (Cont'd)

(1) General (Cont'd)

(b) Option 2 (Cont'd)

- For disconnects after the end of the minimum period but prior to the end of the selected commitment period and for cancellations of the Service Discount Plan prior to the end of the selected commitment period the following applies.

- Where there is no Service Discount Plan commitment period less than the actual time the services have been in effect, the termination liability charge will be the difference between the full monthly rates and the discounted monthly rates for the period the service has been in effect.

- Where there is a Service Discount Plan commitment period less than the actual time the services have been in effect, the termination liability charge will be calculated as follows:

  (i) For IntelliBeam Dedicated SONET Ring (ISDR) with a commitment period which was extended under (E)(2) following, termination liability does not apply during the period of extension.

  (ii) For all other services, termination liability is calculated as the difference between the monthly rates for the highest Service Discount Plan commitment period that could have been satisfied prior to disconnection of the service or cancellation of the plan and the monthly rates for the selected commitment period multiplied by the actual number of months the service has been in effect. For example, if a customer has a 45 month commitment period and disconnects a 1.544 Mbps High Capacity Service after forty months and 5 days, the highest Service Discount Plan commitment period that could have been satisfied is forty months. To determine the termination liability charge, the monthly rate for the 45 month plan is subtracted from the monthly rate for the 40 month plan and the difference is multiplied by the forty months that the service has been in effect. If the monthly rate for the 45 month plan and the monthly rate for the 40 month plan are the same rate, the termination liability charge is zero.

7. Special Access Service (Cont'd)

7.4 Rate Regulations (Cont'd)

7.4.10 Service Discount Plan (Cont'd)

(C) Termination Liability (Cont'd)

(1) General (Cont'd)

(b) Enterprise SONET Service (ESS)

- When an ESS Ring Transport Service is disconnected during the ESS conversion period and prior to the customer satisfying its minimum service requirement, no termination liability charge applies. However, the ESS Ring Transport Service being disconnected is subject to minimum period requirements as set forth in Section 26.1.2(E) following.

- When an ESS Ring Transport Service is disconnected after the ESS conversion period and prior to the end of the selected commitment period, no termination liability charge applies provided that the minimum service requirement is maintained. However, the ESS Ring Transport Service being disconnected is subject to minimum period requirements as set forth in Section 26.1.2(E) following.

- When all of the customer's ESS Ring Transport Services are disconnected during the ESS conversion period and prior to the customer satisfying the minimum service requirement, the termination liability charge is 100% of the applicable discounted monthly rate, for each ESS Ring Transport Service that in-service as of the date of disconnection, for each month and fraction thereof remaining in the ESS conversion period. In addition, termination liability will apply to the minimum service requirement of 336 equivalent DS1s at 50% of the applicable discounted monthly rate for each month beginning in the nineteenth month (i.e., the month following the ESS conversion period) through the remainder of the customer selected commitment period. For the purpose of determining the termination liability charge applicable after the ESS conversion period, the monthly rate to be applied will be the discounted rate for the "O Mile" mileage band.

7. Special Access Service (Cont'd)

7.4 Rate Regulations (Cont'd)

7.4.10 Service Discount Plan (Cont'd)

(C) Termination Liability (Cont'd)

(1) General (Cont'd)

(c) Enterprise SONET Service (ESS) (Cont'd)

- When all of the customer's ESS Ring Transport Services are disconnected after the ESS conversion and prior to the end of the customer selected commitment period, termination liability will apply to the minimum service commitment as determined in Section 26.1.2(D) following at 50% of the applicable discounted monthly rate for each month and fraction thereof remaining in the customer selected commitment period. For the purpose of determining the termination liability charge applicable after the ESS conversion period, the monthly rate to be applied will be the discounted rate for the "O Mile" mileage band. No termination liability charge applies to any of the remaining ESS Ring Transport Service which are in excess of the minimum service commitment, however, such services are subject to the minimum period requirements as set forth in Section 26.1.2(E) following.

- The regulations set forth in (C)(2) through (C)(6) following for upgrades, changes, cancellations, moves and replacements under the Service Discount Plan, respectively, are not applicable to ESS Ring Transport Services or any service connected to an ESS Ring Transport Service.

7. Special Access Service (Cont'd)

7.4 Rate Regulations (Cont'd)

7.4.10 Service Discount Plan (Cont'd)

(C) Termination Liability (Cont'd)

(1) General (Cont'd)

The monthly rates used to calculate termination liability charges are subject to the reductions, as set forth in Section 5.2.7 preceding when Switched Access Services are provided on a Shared Use Digital High Capacity facility.

When some, but not all, services are disconnected for which a first and additional monthly rate is applicable, the monthly rates used to calculate termination liability charges are applied in ascending order beginning with the lowest applicable rates.

Termination liability for 44.736 Mbps Standard Channel Terminations at a primary premises is calculated based upon the rate band determined by the last count taken.

The termination liability charge applies in addition to applicable minimum period charges.

Termination liability does not apply when IDSR as set forth in Section 26.1 following is converted to an equal or higher speed DSR under a term plan as set forth in Section 34.1 following. Time-in-service credit will be granted on the new DSR term plan based on the number of months that service was under the Service Discount Plan. For example, conversion of IDSR under a 60 month term plan that was in service for 32 months will allow for 32 months of time-in-service credit towards the DSR term plan under Section 34.1 following.

ACCESS SERVICE

7. Special Access Service (Cont'd)

7.4 Rate Regulations (Cont'd)

7.4.10 Service Discount Plan (Cont'd)

(C) Termination Liability (Cont'd)

(2) Upgrades

Upgrades include the following types of customer requests:

- A request to disconnect some or all of its discounted digital services in order to replace them with Telephone Company provided digital Special Access Services with a bit rate higher than that of services being disconnected or,

- A request to disconnect some or all of its discounted two-point or multipoint services in order to have these services provided over a multiplexed Telephone Company provided 1.544 Mbps High Capacity facility or,

- A request to disconnect some or all of its discounted FES channels in order to include the channels in FES grooming arrangements or to replace them with FES channels provided with FairPoint Enterprise Network Reconfiguration Service.

- A request to disconnect some or all of its discounted Digital Data Services in order to replace them Telephone Company provided DIGIROUTE℠ digital services II.

- A request to disconnect some or all of its discounted DIGIROUTE℠ digital service II Network Access Ports in order to replace them with FES DSO, 1.544 Mbps, 44.736 Mbps or Network Access Ports.

7. Special Access Service (Cont'd)

7.4 Rate Regulations (Cont'd)

7.4.10 Service Discount Plan (Cont'd)

(C) Termination Liability (Cont'd)

(2) Upgrades (Cont'd)

Upgrades include the following types of customer requests (Cont'd):

- A request to disconnect some or all of its discounted 1.544 Mbps Network Access Ports in order to replace them with 44.736 Mbps Network Access Ports or DS1 or DS3 Network Access Ports.
- A request to disconnect some or all of its High capacity in order to replace them with IDSR s, DSRs, IntelliBeam Entrance Facility, or IntelliBeam Broadband Transport.
- A request to disconnect Video Service in order to replace it with Advanced Uncompressed Digital Video Service.
- A request to disconnect an 8 bit Advanced Uncompressed Digital Video Service in order to replace it with a 10 Bit Advanced Uncompressed Digital Video Service.

7. Special Access Service (Cont'd)

7.4 Rate Regulations (Cont'd)

7.4.10 Service Discount Plan (Cont'd)

(C) Termination Liability (Cont'd)

(2) Upgrades (Cont'd)

Upgrades include the following types of customer requests (Cont'd):

- A request to disconnect Advanced Uncompressed Digital Video Service (AUDVS) in order to replace it with Serial Component Video Service (SCVS), provided that the total dollar amount of the plan for the SCVS is equal to, or greater than, the total dollar amount remaining in the plan for the AUDVS being disconnected.

- A request to disconnect Broadcast Video Service in order to replace it with Serial Component Video Service.

- A request to disconnect a central office multiplexer when the entire multiplexing arrangement (i.e., Special Access Services and multiplexer) is replaced with Special Access Services provided to FairPoint Enterprise Network Reconfiguration Service Network Access Ports (NRS ports).

  The order(s) associated with the new (replacing) services must include the same number and type of Special Access Services as were previously included in the multiplexing arrangement. In addition, the order for each Special Access Service must include the appropriate NRS port for the service ordered.

  Termination liability will not apply to the Special Access Services previously included in the multiplexing arrangement provided that the replacement regulations set forth in (6) following are met.

  The regulations applicable to replacing an entire mutliplexing arrangement with services provided to NRS ports are set forth in 7.4.1(C)(3) preceding as a Mux to NRS Rearrangement Charge.

- A request to disconnect a discounted Standby Channel Termination and its associated Standby NRS Network Access Port in order to replace them with an active Channel Termination and a non-standby NRS Network Access Port of the same or higher bit rate.

- A request to disconnect some or all of its disconnected NRS Network Access Ports in order to replace them with NRS Network Access Ports of a higher bit rate.

- A request to disconnect some or all of its point to point DIGIROUTE℠ digital service II, 1.544 Mbps High Capacity or FairPoint Enterprise DS0, Fractional DS1 or DS1 Service in order to replace them with Special Access Service provided with Frame Relay Service Port Only Connections or FRS UNI Port With Access Line Connections.

ACCESS SERVICE

7. Special Access Service (Cont'd)

7.4 Rate Regulations (Cont'd)

7.4.10 Service Discount Plan (Cont'd)

(C) Termination Liability (Cont'd)

(2) Upgrades (Cont'd)

Upgrades include the following types of customer requests: (Cont'd)

- A request to disconnect some or all of its point to point DIGIROUTE℠ digital service II, 1.544 Mbps High Capacity, 44.736 Mbps High Capacity or FairPoint Enterprise DS0, Fractional DS1, DS1, or DS3 Service in order to replace them with Special Access Service provided with Internet Protocol – Virtual Private Network Dedicated User Network Interface Port Only Connections.

7. Special Access Service (Cont'd)

7.4 Rate Regulations (Cont'd)

7.4.10 Service Discount Plan (Cont'd)

(C) Termination Liability (Cont'd)

(2) Upgrades (Cont'd)

Termination liability charges do not apply to the preceding requests provided that:

- The orders for the disconnect of the existing services or ports and the connect of the new services or ports are placed with the Telephone Company at the same time.

- The new Network Access Ports are provided on the same digital cross-connect system as the replaced Network Access ports were provided.

- With the exception of Special Access Service provided with Internet Protocol – Virtual Private Network Dedicated User Network Interface Port Only Connections, the new services are provided between the same locations as the existing services were provided and

- The replacing Special Access Services or ports have a total channel capacity equal to or greater than the total channel capacity of the services or ports being disconnected or

- The number of replacing channelized services provided over a multiplexed High Capacity facility is equal to or greater than the number of services being disconnected.

7. Special Access Service (Cont'd)

7.4 Rate Regulations (Cont'd)

7.4.10 Service Discount Plan (Cont'd)

(C) Termination Liability (Cont'd)

(2) Upgrades (Cont'd)

- The replacing services and/or Network Access Ports are provided under a Service Discount Plan for a commitment period equal to or longer than that of the service and/or port or port connection being disconnected.

(3) Changes

For DIGIROUTE℠ digital service II and DOVROUTE℠ service, no termination liability charge applies to the following changes:

- Change from two-point to multipoint or from multipoint to two-point.
- Change in transmission speed.

7. Special Access Service (Cont'd)

7.4 Rate Regulations (Cont'd)

7.4.10 Service Discount Plan (Cont'd)

(C) Termination Liability (Cont'd)

(3) Changes (Cont'd)

For Video and Advanced Video Services, no termination liability charge applies to the following changes:

- Change in channel interface (i.e., audio bandwidth, audio signal options, number of audio channels).

- Change from two point to multipoint or vice versa provided that the total number of channels under the customer's Service Discount Plan does not decrease. For Advanced Digital Uncompressed Video Service, no termination liability charge will further apply if a multipoint configuration is replaced by two channels, one of which has the Dual Transmit Channel Termination, provided that the same customer designated premises are maintained.

- Change MVS from One-way Transport to interactive. No termination liability charge applies for discontinuance of the One-way Transport Optional Feature.

7. Special Access Service (Cont'd)

7.4 Special Access Service (Cont'd)

7.4.10 Service Discount Plan(Cont'd)

(C) Termination Liability (Cont'd)

(4) Cancellations

A customer may cancel a 10 year Service Discount Plan for 44.736 Mbps Service provided with an optical fiber interface option, without the application of termination liability charges to such cancellation, if the ratio of the sum of 1/3 (for 135 Mbps capacity), 1/9 (for 405 Mbps capacity) or 1/12 (for 560 Mbps capacity) of the applicable discounted optical fiber interface Channel Termination monthly rates and one DS3 to DS1 Multiplexing monthly rate divided by the non-discounted monthly rate of a 1.544 Mbps High Capacity Channel Termination exceeds 10.

In the event that the Telephone Company initiates a rate increase and the total discounted monthly rate for the affected service increases by eight percent (8%) or more, the customer may cancel its service discount plan for the affected service without termination liability as set forth in (C) following. The customer must exercise its option to cancel the service discount plan for the affected service within thirty (30) days of the date of the effective rate increase.

A customer may cancel a Service Discount Plan for High Capacity Service or FairPoint Enterprise DS1 or DS3 service in order to replace it with one of the following services provided under a term/extended service plan, provided that the total dollar amount of the term/extended service plan for that service is equal to, or greater than, the total dollar amount remaining in the plan for the service being disconnected. No termination liability charge will apply to such cancellation.

- SONET Service, as set forth in Sections 26 and 34.1 following
- Internet Protocol – Virtual Private Network Dedicated User Network Interface Port With Access Line Connection, as set forth in Section 14.

A customer may cancel a Service Discount Plan for Broadcast Video Service, Advanced Broadcast Video Service* or Serial Component Video Service in order to replace it with Hi-Def or 45 Mbps Digital Video Transport Service (DVTS) provided under a term plan, provided that the total dollar amount of the term plan for the DVTS is equal to, or greater than, the total dollar amount remaining in the plan for the service being disconnected. No termination liability charge will apply to such cancellation.

* ABVS availability is limited. See footnote in Section 7.2.14(B) for more details.

7. Special Access Service (Cont'd)

7.4 Rate Regulations (Cont'd)

7.4.10 Service Discount Plan(Cont'd)

(C) Termination Liability (Cont'd)

(4) Cancellations (Cont'd)

A customer may cancel a Service Discount Plan for DIGIROUTE℠ digital service II, FairPoint Enterprise DS0, or FairPoint Enterprise Fractional DS1 services in order to replace it with the following service provided under an extended service plan, provided that the total dollar amount of the extended service plan for that service is equal to, or greater than, the total dollar amount remaining in the plan for the service being disconnected. No termination liability charge will apply to such cancellation.

- Internet Protocol – Virtual Private Network Dedicated User Network Interface Port With Access Line Connection, as set forth in Section 14.

A customer may cancel a Service Discount Plan on its 1.544 Mbps and/or 44.736 High Capacity Services without the application of termination liability in order to include such 1.544 Mbps and/or 44.736 High Capacity Services in a Commitment Discount Plan (as set forth in Section 25.1 following) or the National Discount Plan (as set forth in Section 25.2 following).

(5) Moves

Except for 1.544 Mbps and 44.736 Mbps Service, when a customer requests that some or all of its services under a Service Discount Plan be moved to a different building, no termination liability charge applies provided the services remain on the same billing account. When a customer requests that some or all of its 1.544 Mbps or 44.736 Mbps Service under a Service Discount Plan be moved to a different building, no termination liability charge applies provided the services remain within the same Telephone Company operating territory.

7. Special Access Service (Cont'd)

7.4 Rate Regulations (Cont'd)

7.4.10 Service Discount Plan (Cont'd)

(C) Termination Liability (Cont'd)

(6) Replacements

(a) When a customer with existing services or ports under a Service Discount Plan wishes to replace one or more of the service(s) or ports included in that Service Discount Plan with other new or existing services(s) or ports of the same speed or type, as appropriate, for the balance of the commitment period for that Service Discount Plan, no termination liability charge will apply provided that:

(i) The orders to accomplish the replacement are placed with the Telephone Company at the same time to be completed at the same time, or for 1.544 Mbps and 44.736 Mbps High Capacity Services, DDS II and Supertrunking Transport Video Services, and their applicable Optional Features and Functions (except as specified in (b) following) or their associated NRS Network Access Ports which are included in the Service Discount Plan, the orders to accomplish the replacement are (1) placed with the Telephone Company within sixty (60) days of each other and (2) the replacing services or ports are provided within the same Telephone Company operating territory as the services or ports that are replaced in the Service Discount Plan.

7. Special Access Service (Cont'd)

7.4 Rate Regulations (Cont'd)

7.4.10 Service Discount Plan (Cont'd)

(C) Termination Liability (Cont'd)

(6) Replacements (Cont'd)

(a) (Cont'd)

(ii) The number of services or ports included in the Service Discount Plan remains the same. The replacing services may not be equipped with the same Optional Features and Functions or BSEs as the services they replace. In this case, the appropriate termination liability charges apply to the Optional Features and Functions or BSEs no longer provided.

(b) When a customer with existing multiplexers under a Service Discount Plan wishes to replace one or more of the multiplexers included in that Service Discount Plan with other new or existing multiplexer(s) of the same type for the balance of the commitment period for that Service Discount Plan, no termination liability charge will apply provided that:

(i) The orders to accomplish the replacement are placed with the Telephone Company at the same time to be completed at the same time, or for DS3 to DS1, DS1 to DS0 and DS1 to Voice multiplexers, the orders to accomplish the replacement are (1) placed with the Telephone Company within sixty (60) days of each other and (2) the replacing multiplexer is provided in the same Telephone Company operating territory as the multiplexer being replaced in the Service Discount Plan, and

(ii) The number of multiplexers included in the Service Discount Plan remains the same, and

(iii) For multiplexers other than DS3 to DS1, DS1 to DS0 and DS1 to Voice, the replacing multiplexers must be located in the same Telephone Company Hub as the multiplexers being replaced.

7. Special Access Service (Cont'd)

7.4 Rate Regulations (Cont'd)

7.4.10 Service Discount Plan (Cont'd)

(C) Termination Liability (Cont'd)

(6) Replacements (Cont'd)

(c) When a customer with an existing FES FDDI Service configuration under a Service Discount Plan wishes to replace one or more of the Channel Terminations on the configuration included in the Service Discount Plan with other new Channel Termination(s) of the same type for the balance of the commitment period for that Service Discount Plan, no termination liability charge will apply provided that:

(i) The orders to accomplish the replacement are placed with the Telephone Company at the same time, or the orders to accomplish the replacement are placed with the Telephone Company within sixty (60) days of each other, and

(ii) The number of Channel Terminations included in the Service Discount Plan remains the same.

(D) Additions of Service

(1) Except as set forth in (2) through (5) following, when a customer with an existing Service Discount Plan wishes to increase the number of services or Network Access Ports for a FairPoint Enterprise Network Reconfiguration Service it has the following options.

- Subscribe to the additional services under non-discounted rates.
- Subscribe to the additional services under a separate Service Discount Plan at the then effective discount percentage, rates and charges.
- Cancel the existing Service Discount Plan and include both the existing and the additional services under a new Service Discount Plan for a commitment period equal to or longer than the original period. No termination charges apply to such cancellation.

When a customer with an existing Service Discount Plan wishes to add FairPoint Enterprise Network Reconfiguration Service (NRS) capability to those services, the customer may add the NRS capability to its existing Service Discount Plan for the balance of the commitment period on the associated service, at the rates specified for the existing commitment period.

7. Special Access Service (Cont'd)

7.4 Rate Regulations (Cont'd)

7.4.10 Service Discount Plan (Cont'd)

(D) Additions of Service (Cont'd)

(2) When a customer with an existing Service Discount Plan wishes to increase the number of Channel Terminations or Channel Mileage, if applicable, to its FES FDDI Service, the customer may do so for the balance of the commitment period remaining in its Service Discount Plan. Effective November 3, 2000, FES FDDI is no longer available to new customers.

(3) For additions of service (e.g., nodes or CO Extensions) to an existing IDSR service under Section 26.1 following, the additional services will be added for the remainder of the applicable commitment period of such IDSR (including any permitted extensions as set forth in (E)(2) following).

(4) A customer with an existing Service Discount Plan wishing to add an optional feature or function or BSE to an existing service has the following options:

- Cancel the existing Service Discount Plan for the service and include both the optional feature or function or BSE and its corresponding service under a new Service Discount Plan for a commitment period equal to or longer than the that of the cancelled plan for the corresponding service. No termination charges apply to such cancellation.

- Subscribe to the Optional Feature or function or BSE under the existing service discount plan for a commitment period equal to the number of months remaining in the commitment period for the corresponding service, if such a commitment period exists for the applicable optional feature or function or BSE.

(5) When a customer with ESS wishes to increase the number of ESS DS1 or DS3 Ring Transport Services, the additional services will be added for the balance of the commitment period.

7. Special Access Service (Cont'd)

7.4 Rate Regulations (Cont'd)

7.4.10 Service Discount Plan (Cont'd)

(E) Extension of Commitment Period

(1) For all services except IntelliBeam Dedicated SONET Ring (IDSR) as set forth in Section 26.1 following, a customer may, at any time prior to the expiration of the selected commitment period for an existing Service Discount Plan, change to a Service Discount Plan with a longer commitment period at the then effective discount percentage. No termination liability charges will apply for any service or Network Access Ports extended under the longer commitment period. The monthly rates applicable for the longer commitment period will apply effective with the next bill day following the request for the change.

(2) For IntelliBeam Dedicated SONET Ring (IDSR) as set forth in Section 26.1 following, the conditions set forth in (a) through (d) following apply.

(a) The customer may not extend its Service Discount Plan to a plan with a longer commitment period as allowed under (E)(1) preceding; and

(b) The Telephone Company will not renew such IDSR Service Discount Plan under the terms and conditions specified in (F) following.

(c) For a customer whose Service Discount Plan commitment period has not yet expired as of October 5, 2006, the customer may continue with the service to the end of the Service Discount Plan commitment period currently in effect. Upon expiration of the Service Discount Plan commitment period currently in effect, the customer has the following options.

(1) Disconnect service.

(2) Convert the service in accordance with the footnote in Section 26.1 following.

(3) Continue the service under a single extension to the Service Discount Plan commitment period for its IDSR. The extension may not exceed twenty-four (24) months from the date that the current Service Discount Plan commitment period is due to expire. At the end of such extension, the customer must either disconnect service or convert the service in accordance with the footnote in Section 26.1 following.

7. Special Access Service (Cont'd)

7.4 Rate Regulations (Cont'd)

7.4.10 Service Discount Plan (Cont'd)

(E) Extension of Commitment Period (Cont'd)

(2) (Cont'd)

(d) For a Service Discount Plan whose commitment period has already expired as of October 5, 2006, and regardless of whether the expiration date of such plan had previously been extended or not, the customer has the following options.

(1) Disconnect service no later than October 5, 2008.

(2) Convert the service in accordance with the footnote in Section 26.1 following no later than October 5, 2008.

7. Special Access Service (Cont'd)

7.4 Rate Regulations (Cont'd)

7.4.10 Service Discount Plan (Cont'd)

(F) Rate Regulations

(1) Where the Service Discount Plan is requested to be provided coincident with the connection of new service, it will be effective with the establishment of service.

(2) Where the Service Discount Plan is requested to be provided on existing service, the plan will be effective on the date the Telephone Company receives the Access Order requesting the discount.

(3) When a Service Discount Plan is provided on Enterprise SONET Service, the commitment period for the Service Discount Plan will be effective with the establishment of the first ESS Ring Transport Service on the ring.

(4) Unless otherwise noted, at the end of its selected commitment period, the customer will have the option of subscribing to any then effective Service Discount Plan. If the customer does not notify the Telephone Company of its choice prior to the expiration of the commitment period, the customer's current Service Discount Plan will be renewed upon expiration of the selected period. The renewed plan will have a commitment period equal to that originally selected by the customer and the plan will be considered new. For FDDI Service, applicable rates for the expiring commitment period will continue to apply. With respect to IDSR service provided pursuant to Section 26.1 following, the regulations set forth in this paragraph shall not apply, and the regulations set forth in Section (E)(2) preceding shall apply in lieu thereof.

(5) If the customer notifies the Telephone Company of its choice within the first sixty days of the date of renewal, the customer may cancel the renewed plan and subscribe to any then effective Service Discount plan or continue with the renewed plan. If, within the first sixty days of the date of renewal, the customer elects to cancel the renewed plan and subscribe to the service on a month-to-month basis or subscribe to a then effective Service Discount Plan, termination liability will not apply.

7. Special Access Service (Cont'd)

7.4 Rate Regulations (Cont'd)

7.4.10 Service Discount Plan (Cont'd)

(G) Rate Stability and Base Rates

For services provided with Rate Stability, the discount percentage is applied to the Rate Stability base rates specified in Section 30.7 following for price band rates and 31.7 following for all other rates. Such rates will not be subject to Telephone Company initiated rate increases over the commitment period selected by the customer. However, the Telephone Company may initiate an increase in the discount percentage, thereby causing a decrease in the rates applicable to the customer. In no case will the Rate Stability base rate exceed the non-discounted monthly rate for the service.

For services provided with Base Rates (without rate stability), the discount percentage is applied to the Base Rates specified in Section 30.7 following for price band rates and 31.7 following for all other rates. Such rates are not rate stable and may change during the commitment period, causing an increase or decrease in the rates applicable to the customer. In no case will the Base Rate exceed the non-discounted monthly rate for the service.

7. Special Access Service (Cont'd)

7.4 Rate Regulations (Cont'd)

7.4.10 Service Discount Plan (Cont'd)

(H) Prepayment Option for Fiber Based Multichannel Video Service (FBMVS), FairPoint Enterprise Service Fiber Distributed Data Interface (FDDI) and IntelliBeam Dedicated SONET Ring (IDSR)

A customer subscribing to MVS, FES FDDI* or IDSR Service under a Service Discount Plan may, at any time during the commitment period, elect to prepay a portion or all recurring charges for the remainder of the commitment period. For partial prepayments, a minimum of twelve (12) months of the Service Discount Plan commitment period may be prepaid. The prepayment amount will be calculated using the monthly rate in effect at the time the prepayment option is elected, adjusted by the prime lending rate in effect when the prepayment amount is calculated. Recurring charges will cease for the portion of the commitment period which was prepaid. No adjustments will be made for Telephone Company initiated rate changes which may occur subsequent to the customer's election to prepay. Upon expiration of the service period for the selected Service Discount Plan, regulations set forth in (E) and (F) preceding apply. When a customer electing the Prepayment Option discontinues the Service Discount Plan prior to expiration of the service period, credit for the unused portion of the monthly charges already paid will apply. Such credit will include an adjustment for the prime lending rate in effect when the prepayment was calculated, reduced by the appropriate termination liability charges as specified in (C) preceding.

* Service availability limited. See Section 23.1 for more information.

7. Special Access Service (Cont'd)

7.4 Rate Regulations (Cont'd)

7.4.11 Shared Billing Arrangement

Each Host Customer and Service User entering into a Shared Billing Arrangement is solely responsible to the Telephone Company for charges associated with that customer's portion of the shared multiplexed or groomed service. Disconnection of service by the Host Customer does not relieve the Service User of the shared multiplexed or groomed service of any obligation to pay access charges associated with the portion of the shared multiplexed or groomed service to which that Service User subscribes. Billing for services and facilities will continue until a disconnect request from the Host Customer or Service User has been received by the Telephone Company. The Host Customer of a Shared Billing Arrangement is solely responsible for notifying the connecting Service User(s) participating in the Shared Billing Arrangement in the event of disconnection of the Host Customer's service.

7. Special Access Service (Cont'd)

7.4 Rate Regulations (Cont'd)

7.4.11 Shared Billing Arrangement (Cont'd)

For administrative purposes, one "Arrangement" under the High Capacity, IDSR, DSR, or IntelliBeam Broadband Transport Shared Billing Arrangement option shall be limited to one Host Customer permitting one Service User to connect a specified number of services to one specified multiplexer on the Host Customer's service. A subsequent request by the Service User to increase the number of services connected to the same multiplexer shall not constitute a new or separate "Agreement".

A Shared Billing Arrangement shall be established between a Host Customer and a Service User upon the completion of the service order for the first circuit(s) in the Arrangement. A Shared Billing Arrangement shall be deemed cancelled when the last circuit in the Arrangement belonging to the Service User has been disconnected.

A Processing Charge will apply for each Service User DS1, DS3 or STS-1 order processed for a Shared Billing Arrangement. The High Capacity, IDSR, and DSR Shared Billing Arrangement Processing Charge is contained in Section 30.7.9 following for price band charges and 31.7.9 following for all other charges and the FairPoint Enterprise Service Shared Billing Arrangement Processing charge is contained in Section 30.7.15 following for price band charges and 31.7.15 following for all other charges. The order processing charge does not apply when a Service User's IBT Service is connected to a Host Customer's IBT, IDSR, or DSR or between two separate Host Customer's IDSR or DSR rings. A Processing Charge does not apply for Service User Integrated Optical Service Rider order(s) processed for a Shared Billing Arrangement. The order processing charge applies in addition to all other applicable rates and charges for the Service User's service(s).

7. Special Access Service (Cont'd)

7.5 Rates and Charges

Rates and charges for Special Access Service are found in Section 30.7 following for price band rates and charges and Section 31.7 following for all other rates and charges.

ACCESS SERVICE

8. Operator Services

8.1 Inward Operator Service

8.1.1 General

Inward Operator Services enable customers to be connected to Telephone Company Traffic Operation Position Systems (TOPS) office(s) for the purpose of providing operator services to their end users.

8.1.2 Service Description

(A) Busy Line Verification (BLV)

BLV is a service where, at the request of the customer's operator, a Telephone Company operator will attempt to determine the status of an exchange service line (e.g., conversation in progress, available to receive a call or out of service) and report to the customer's operator.

(B) Busy Line Verification/Interrupt (BLV/I)

BLV/I is a service where, at the request of the customer's operator, a Telephone Company operator determines and reports that a conversation is in progress on an exchange service line and subsequently interrupts such conversation to request that the conversation be terminated so that the customer's end user can attempt to complete a call to the line.

8.1.3 Technical Specifications

Inward Operator Services are provided over trunks between the customer's premises and Telephone Company TOPS Office(s). Where FGD or CST BSA - Option 3 trunks which carry other customer traffic are used, the technical specifications for such trunks apply. Where FGD or CST BSA - Option 3 trunks arranged exclusively for Inward Operator Services are used, the following technical specifications apply:

8. Operator Services (Cont'd)

8.1 Inward Operator Service (Cont'd)

8.1.3 Technical Specifications (Cont'd)

- Type A transmission specifications applicable to a FGD or CST BSA Option 3 trunk routed to an access tandem, as set forth in 6.4.1(A) preceding.
- Interface Groups 2, 6 and 9, as set in 6.1.3(A)(1) preceding.
- Special Facilities Routing, Design Layout Reports, Acceptance Testing and Testing Capabilities as set forth in 6.1.4, 6.1.5, 6.1.6 and 6.2.4(D) preceding, respectively.

8.1.4 Undertaking of the Telephone Company

In addition to the obligations of the Telephone Company set forth in Section 2. preceding, the Telephone Company has certain obligations pertaining only to the provision of Inward Operator Services. These obligations are as follows:

- The Telephone Company will provide BLV and BLV/I for telephone numbers provided in its operating territory.
- The Telephone Company operator will respond to one telephone number per call on requests for BLV and BLV/I.
- The Telephone Company will designate which TOPS office(s) serves which NXXs and make such information available to the customer.

8. Operator Services (Cont'd)

8.1. Inward Operator Service (Cont'd)

8.1.5 Obligations of the Customer

In addition to the obligations of the customer set forth in Section 2. preceding, the customer has other obligations pertaining only to the provision of Inward Operator Services. These obligations are as follows:

- The customer shall order Inward Operator Services as set forth in Section 5. preceding.
- The customer shall indemnify and save the Telephone harmless against all claims that may arise from either party to the interrupted call or any other person.

8.1.6 Rate Regulations

(A) No minimum monthly charge applies.

(B) Switched Access Service per access minute charges do not apply to Inward Operator Services trunks.

(C) The charge for BLV applies per verification requested. The charge for BLV/I applies per verification and interruption requested.

(D) Rearrangements and moves of FGD or CST BSA - Option 3 trunks are as set forth in 6.7.1(C)(3) and 6.7.5 preceding, respectively.

8.1.7 Rates and Charges

Rates and Charges for Inward Operator Services are found in 31.8.1 following.

8. Operator Services (Cont'd)

8.2 Operator Passthrough Service

8.2.1 General

Operator Passthrough Service enables a customer who provides operator services to receive calls passed through to it by the Telephone Company, within a specified LATA, for the purpose of operator assisted call completion or, for customers who do not provide operator services, Operator Passthrough Service enables end user calls to be passed through to either a customer designated Operator Services Provider or a Telephone Company provided recording. Operator Passthrough Service is only available in end offices equipped with Feature Group D or CST BSA - Option 3.

8.2.2 Service Description

Operator Passthrough Service provides end users with access to the operators of the customer for operator assisted call completion, when the customer provides operator services for end users for calls originating from a particular LATA and is capable of receiving calls passed through to it by the Telephone Company in that LATA.

The Telephone Company will, when requested by an end user, connect that end user to a specified customer for operator call completion provided that customer offers operator services in the end user's originating LATA and is capable of receiving calls passed through to it by the Telephone Company in that LATA.

If the customer does not provide operator services for end users, at the option of the customer, the Telephone Company will provide end users with access to a customer designated Operator Services Provider or to a Telephone Company provided announcement which will direct the end user to contact their Presubscribed Interexchange Carrier for dialing instructions. For customers who opt to designate an Operator Services Provider, only one Operator Services Provider may be designated within a specified LATA.

8.2.3 Rate Regulations

(A) The Operator Passthrough charge, which includes the costs associated with handling the operator traffic, applies on a per call passed through basis.

(B) The customer will be assessed the Operator Passthrough Charge per call passed through to either the customer's operator or a Telephone Company provided recording.

8. Operator Services (Cont'd)

8.2 Operator Passthrough Service (Cont'd)

8.2.3 Rate Regulations (Cont'd)

(C) The Operator Passthrough charge will be assessed on the designated Operator Services Provider when the customer designates an Operator Services Provider to handle its operator traffic.

8.2.4 Service Rearrangements

In the event that a customer who does not provide operator services for its end users requests a change in its designated operator services traffic arrangement, a Service Rearrangement charge as set forth in 31.8.2 following will apply. A First TOPS Office Rearrangement Charge will apply for the first TOPS office affected by the change, and an Additional TOPS Office Rearrangement Charge will apply for each additional TOPS office affected if ordered at the same time and for the same date.

8.2.5 Rates and Charges

Rates and charges for Operator Passthrough Service are set forth in 31.8.2 following.

9. Directory Assistance Service

The Telephone Company will provide Directory Assistance (DA) Service to a customer from Directory Assistance Service locations (DA location).

9.1 General Description

DA Service provides Directory Access Service to DA locations, use of DA access equipment, and use of DA operators to provide telephone numbers.

9.2 Manner of Provision

9.2.1 Directory Access Service

Transport of Directory Access Service is provided between the customer's premises, multiplexing node or virtual collocation arrangement and a DA location using the Switched Access Service Local Transport facilities set forth in Section 6.5 preceding.

(A) General

Each Directory Access Service will consist of the following:

- An Interface Group equipped with an available Premises Interface Code at the customer's premises, multiplexing node or virtual collocation arrangement.

- Directory Transport between the premises, multiplexing node or virtual collocation arrangement of the ordering customer and the DA location.

The following Switched Access Service Transport facilities are used in the provision of Directory Access Service Transport:

- Entrance Facility for the transport of the DA Access Service call from the customer's premises, multiplexing node or virtual collocation arrangement to the serving wire center of the customer premises, multiplexing node or virtual collocation arrangement.

- Direct Trunked Transport for transport of the DA Access Service call from the serving wire center of the customer premises, wire center with SONET Multiplexing capability, multiplexing node or virtual collocation arrangement to a DA location.

- Tandem Switched Transport for transport of the DA Access Service call from the serving wire center of the customer premises, wire center with SONET multiplexing capability, multiplexing node or virtual collocation arrangement to the DA location where the transport is routed through a tandem before reaching the DA location. Tandem Switched Transport includes the switching functions performed at the access tandem.

9. Directory Assistance Service (Cont'd)

9.2 Manner of Provision (Cont'd)

9.2.1 Directory Access Service (Cont'd)

(B) Interface Group and Premises Interface Code

Interface Groups 2, 6, 7 and 9 as set forth in 6.1.3(A)(1) preceding are available for Directory Access Service based on the Entrance Facility over which the Directory Access Service is provided. When only Directory Access Service is provided, only the following Premises Interface Codes are available:

4DS9-15	6EA2-E	4RV2-0
4DS9-31	6EA2-M	
4DS6-44	4SF3	

Such Premises Interface Codes are described in 6.1.3(A)(1) preceding. When Directory Access Service is combined with Feature Group B, C, D or CST BSA - Option 1, 2 or 3 Switched Access Service, the Premises Interface Code for the combination will be the available Premises Interface Code provided for the Feature Group B, C, D or CST BSA - Option 1, 2 or 3 Switched Access Service ordered by the customer. Except as set forth in 9.4.1 following, the Interface Groups and Premises Interface Codes provided under a Special Order for Directory Access Service are subject to the order conditions as set forth in Section 5. preceding. For purposes of applying the order regulations, a DA location is considered to be a customer end user serving wire center.

(C) Directory Transport

Directory Transport provides the transmission facilities and transport termination between the premises, multiplexing node or virtual collation arrangement of the ordering customer and the DA location.

At the customer's option, DA Access Service may either be provided over trunk groups dedicated to DA Access Service or it may be combined with the customer's FGB, FGC, FGD, CST BSA - Option 1, 2 or 3 Switched Access Service as set forth in (1) and (2) following.

9. Directory Assistance Service (Cont'd)

9.2 Manner of Provision (Cont'd)

9.2.1 Directory Access Service (Cont'd)

(C) Directory Transport (Cont'd)

(1) Dedicated Trunk Groups

When the customer requests trunk groups routed directly to a DA location or an access tandem, a Direct Trunked Transport facility is required to transport the DA Access Service call from the serving wire center of the customer premises, wire center with SONET multiplexing capability, multiplexing node or virtual collocation arrangement to the DA location or access tandem. When Direct Trunked Transport to the access tandem is ordered, common transport will be used to transport the call to the DA location and the Tandem Switched Transport rates will apply for that portion of the call. An Entrance Facility for the dedicated trunk groups is also required for transport of the Directory Access Service call from the customer premises, multiplexing node or virtual collocation arrangement to the serving wire center of the customer premises or multiplexing node. When the dedicated trunk groups are requested, address signaling is not provided on either the Entrance Facility or the Direct Trunked Transport.

When dedicated trunk groups are requested, the Telephone Company may require the customer to order a separate trunk group for each NPA. Separate trunk groups will be required when the Telephone Company notifies the customer that the mechanized search of its data base and its mechanized operator practices require a mechanized identification of the NPA code for which the customer's end user desires DA information.

(2) Combined Trunk Groups

Trunks routed through a tandem to a DA location may be ordered as Tandem Switched Transport. At the customer's option, tandem switched Directory Access service will be provided either as a separate Directory Access Service trunk group or in combination with the customer's other Feature Group B, C, D or CST BSA - Option 1, 2 or 3 Switched Access Service. An Entrance Facility for the trunk groups combining the trunk side Switched Access Service and the DA Access Service is also required for transport of the DA Access Service call from the customer premises, multiplexing node or virtual collocation arrangement to the serving wire center of the customer premises, multiplexing node or virtual collocation arrangement.

9. Directory Assistance Service (Cont'd)

9.2 Manner of Provision (Cont'd)

9.2.1 Directory Access Service (Cont'd)

(C) Directory Transport (Cont'd)

(2) Combined Trunk Groups (Cont'd)

DA Access Service using combined trunk groups allows for transport of the DA Access Service call (555-1212 or NPA-555-1212) from the customer's premises or multiplexing node to the access tandem to the DA location. Only NPA codes handled by the DA location served by the access tandem switch will be processed.

Directory Transport is a two-way voice frequency transmission path which transports calls in the terminating direction (from the premises, multiplexing node or virtual collocation arrangement of the ordering customer to the DA location). The voice frequency transmission path may be comprised of any form or configuration of plant capable of and typically used in the telecommunications industry for the transmission of voice and associated telephone signals within the frequency bandwidth of approximately 300 to 3000 Hz.

The Directory Transport rate category, when provided as Tandem Switched Transport (dedicated transport to an access tandem and common transport from the access tandem to the DA location), is comprised of Channel Mileage and Dedicated Tandem Trunk Port rates as set forth in Section 6. preceding, a Directory Transport Termination rate, a Directory Transport Facility rate, a Tandem Switching rate, a DA Transport Multiplexing rate and an Interconnection Charge. The Directory Transport Termination rate provides for the termination of the voice frequency transmission path at the DA location or at the access tandem. The Directory Transport Facility rate provides for that portion of the voice frequency transmission path between the DA location and the access tandem. The DA Transport Multiplexing rate provides for the use of common DS3 to DS1 multiplexers in conjunction with traffic that is switched at an access tandem.

9. Directory Assistance Service (Cont'd)

9.2 Manner of Provision (Cont'd)

9.2.1 Directory Access Service (Cont'd)

(C) Directory Transport (Cont'd)

The Direct Trunked Directory Transport rate element is comprised of fixed and per mile Channel Mileage as set forth in Section 6. preceding, and, when ordered directly to the DA location Dedicated Tandem Trunk Port rates and an Interconnection Charge. The Channel Mileage rates provide for that portion of the voice frequency transmission path at the DA location and the serving wire center of the customer premises, multiplexing node or virtual collocation arrangement. DS3 to DS1 Multiplexing charges will apply, as appropriate.

The application of Directory Transport rates is as set forth in 9.6.2 following.

9. Directory Assistance Service (Cont'd)

9.2 Manner of Provision (Cont'd)

9.2.1 Directory Access Service (Cont'd)

(C) Directory Transport (Cont'd)

The customer will instruct the Telephone Company as to whether the Directory Access Service is to be routed directly to a DA location or through an access tandem switch appropriately equipped for DA measurement and served by DA trunks to the DA location when such an access tandem switch is available. The combination of Feature Group B, C, D or CST BSA - Option 1, 2 or 3 Switched Access Service with DA Service will only be provided at such available and appropriately equipped access tandem switches.

When Direct Trunked Directory Transport is provided to the DA location, no address signaling is provided. When Tandem Switched Directory Transport is provided, wink start-start pulsing signaling is provided at the access tandem switch. The customer shall address each call to the DA location using NPA+555+1212 or when required by the Telephone Company, 555-1212.

The number of Directory Transport transmission paths provided is based on the customer's order.

Directory Transport may, at the option of the customer, be provided for both interstate and intrastate communications. When the customer requests such mixed access, the interstate Directory Transport charges will be determined by the Telephone Company using the data furnished by the customer as set forth in 2.3.10 preceding.

Except as set forth in 9.5.1 following, Directory Transport provided under a Special Order is subject to the order conditions as set forth in Section 5. preceding.

Directory Transport is provided with a Local Transport Interface Group as set forth in 6.1.3(A)(1) preceding. Only Local Transport Interface Groups 2, 6, 7 and 9 will be provided.

9. Directory Assistance Service (Cont'd)

9.2 Manner of Provision (Cont'd)

9.2.1 Directory Access Service (Cont'd)

(D) Special Facilities Routing

A customer may request that Directory Access Service be provided via Special Facilities Routing. The regulations, rates and charges for Special Facility Routing (Avoidance Diversity and Cable only) are as set forth in Section II. Following.

9.2.2 Transmission Specifications

Directory Access Service is provided with either Type A or B Transmission Specification. The specifications associated with the parameters are guaranteed to the DA location, whether routed directly or via an access tandem. Type B Transmission Specification is provided with the Interface Group 2, 6, 7, and 9 when routed via an access tandem switch.

When DA Service is combined with Feature Group D or CST BSA - Option 3 Switched Access Service, Type A Transmission Specifications is provided. When DA Service is combined with Feature Group B or CST BSA - Option 1 Switched Access Service, Type B Transmission Specification is provided for Interface Groups 2, 6, 7, and 9. When DA Service is combined with Feature Group C or CST BSA - Option 2 Switched Access Service, Type B Transmission Specification is provided.

Type A and B Transmission Specifications are set forth in 6.4.1 preceding.

9. Directory Assistance Service (Cont'd)

9.2 Manner of Provision (Cont'd)

9.2.3 Acceptance Testing and Testing Capabilities

The acceptance testing and testing capabilities for Directory Access Service traffic routed through an access tandem are the same as those for the associated Feature Group B, C, D or CST BSA - Option 1, 2 or 3 end office switching. The acceptance testing for Directory Access Service traffic routed directly to or routed in a separate trunk group through an access tandem to the DA location will be as set forth in 6.1.6 preceding. The testing capabilities for Directory Access Service traffic routed directly to or routed in separate trunk group through an access tandem to the DA location will be as set forth for cooperative scheduled testing or manual scheduled testing in Section 13. Following.

9.3 Undertaking of the Telephone Company

9.3.1 A Telephone Company DA operator, when furnished a name and locality, will provide or attempt to provide the telephone number listed in the Telephone Company DA records associated with the name given at the rates and charges as set forth in 31.9 following. The Telephone Company's contact with the customer's end user shall be limited to that effort necessary to process a customer's end user's request for a telephone number; and the Telephone Company will no transfer, forward or redial a customer's end user call to any other location for any purpose other than provision of DA Service.

9. Directory Assistance Service (Cont'd)

9.3 Undertaking of the Telephone Company (Cont'd)

9.3.2 A maximum of two (2) requests for telephone numbers will be accepted for call to the DA operator.

9.3.3 A telephone number which is not listed in DA records will not be available to the customer's end user.

9.3.4 The Telephone Company will specify the DA location which provides the DA service for each numbering plan area code (NPA). The DA locations are as shown in NATIONAL EXCHANGE CARRIER ASSOCIATION,INC. TARIFF F.C.C NO. 4.

When it becomes necessary, as determined by the Telephone Company, to change a DA location, the Telephone Company will notify the involved customers six months prior to the change. For such changes, the regulations as set forth in 2.1.7 preceding apply.

9.3.5 Trunk side switching is provided at the DA Service access location. The DA Service access locations will provide trunk answer and disconnect supervisory signaling.

9.3.6 The Telephone Company will distribute the calls received over the Directory Access Services to the DA operators using the DA location access equipment.

9.3.7 Design Layout Report

The Telephone Company will provide to the customer the makeup of the facilities and services provided under this section as Directory Access service. This information will be provided in the form of a Design Layout Report similar to that as set forth in 6.1.5. Design Layout Reports for Directory Access Service will be provided only when specifically requested by the customer. The Design Layout Report will be provided to the customer at no charge, and will be reissued or updated whenever the facilities provided for the customer's use are materially changed.

9. Directory Assistance Service (Cont'd)

9.3 Undertaking of the Telephone Company (Cont'd)

9.3.8 In the event that the telephone number is unavailable to the DA operator, no credit applies for the charge for the call to the DA operator. When the DA location or DA operator equipment or terminals are out of service due to a Telephone Company failure or an incorrect number is provided, a credit as set forth in 9.5.7 following will apply.

9.3.9 DA Service may, at the option of the customer, be provided for interstate and intrastate communications. When the customer requests such mixed access, the interstate DA Service charges will be determined by the Telephone Company using the data furnished by the customer as set forth in 2.3.10 preceding.

9.4 Obligations of the Customer

9.4.1 The customer shall determine and order the quantity of trunks and interface type of Directory Access Services it needs for DA service.

For Tandem Switched Transport, the customer may order in either trunk quantities or busy hour minutes of capacity. The customer shall specify the interface type of Directory Access Services it need for DA Service.

9.4.2 When DA Service is initially ordered, the customer shall order the service for at least six months. Thereafter, additional service may be ordered for a minimum of six months. Not later than three months prior to the end of the six month period, the customer shall notify the Telephone Company if the service is to be discontinued at the end of the six month period. If no notice is received from the customer, the Telephone Company will automatically extend the service for another six months and all appropriate charges as set forth in 31.9 following for another six months will apply.

9.4.3 The customer facilities at the premises of the ordering customer shall provide the necessary on-hook and off-hook supervision.

9. Directory Assistance Service (Cont'd)

9.4 Obligations of the Customer (Cont'd)

9.4.4 When requested by the Telephone Company, the customer shall order a separate trunk group for DA Service for each NPA. The conditions when the customer will be requested to order separate trunk groups for each NPA are set forth in 9.2.1(C) preceding.

9.4.5 When the customer bills its end users, the customer shall be responsible for all contacts and arrangements with end users concerning the provision and maintenance of, and the billing and collecting of charges for, DA Service furnished to its end users.

9.4.6 The customer understands that DA operators will respond to only two (2) telephone number requests per call and will not transfer, forward or redial the call to another location for any purpose other than the provision of DA Service.

9.5 Payment Arrangement

9.5.1 Minimum Period

The minimum period for which DA Service and the Directory Access Service is provided and for which charges apply in six months. A minimum period of six months applies for each additional period of service ordered or extended.

If DA Service is discontinued prior to the end of each six month period, the charges that apply for the remaining months are the nonrecoverable costs. Such costs include the nonrecoverable cost of equipment and material ordered, provided or used, plus the nonrecoverable cost of installation and removal including the costs engineering, labor, supervision, transportation, right-of-way and other associated cost less estimated net salvage.

9. Directory Assistance Service (Cont'd)

9.5 Payment Arrangement (Cont'd)

9.5.2 Minimum Monthly Charge

DA service is subject to a minimum monthly charge.

The minimum monthly charge for Directory Assistance Service calls and the rate elements for Directory Transport (whether Tandem Switched or Direct Trunked) is the sum of the monthly charges as set forth in 31.6 following and the sum of the Directory Assistance Service calls and Interconnection Charge as set forth in 31.9 following for the actual usage for the month.

9.5.3 Cancellation of a Special Order

A customer may cancel a Special Order for DA Service on any date prior to the service date. The cancellation date is the date the Telephone Company receives written or verbal notice from the customer that the Special Order is to be cancelled. The verbal notice must be followed by written confirmation within 10 days.

When a customer a Special order for DA Service after the order date but prior to the start of service, the appropriate charges as set forth in Section 5. preceding apply for the Directory Access Service cancelled. In addition, a charge equal to any unrecoverable capital costs incurred by the Telephone Company will apply to the customer.

9.5.4 Changes to Special Orders

When a customer requests changes to a pending order for DA Service, such changes will be undertaken if they can be accommodated by the Telephone Company. The appropriate charges as set forth in Section 5. preceding apply for the Directory Access Service cancelled. In addition, a charge equal to any other cost incurred by the Telephone Company because of the change will apply.

9. Directory Assistance Service (Cont'd)

9.5 Payment Arrangement (Cont'd)

9.5.5 Moves

A move involves a change in the physical location of the point of termination at the customer premises or of the customer premises. Moves will be treated as set forth in 6.7.5 preceding and all associated nonrecurring charges will apply. Minimum period requirements will be established at the new location as set forth in 6.7.5 preceding. The customer will also remain responsible for satisfying all outstanding minimum period of charges for the discontinued service.

9.5.6 DA Service Rearrangements

Nonrecurring charges apply for service arrangement. Service rearrangements are as set forth in 6.7.1(C)(3) preceding. The Service Rearrangement Charges are set forth in 6.7.1 for the type of change provided by the Telephone Company.

9.5.7 Credit Allowance for DA Service

(A) When the DA location or DA operator equipment or terminals are out of service due to a Telephone Company equipment failure or an incorrect number is provided and a customer DA all has been answered or forwarded to a DA operator, a credit allowance for a call answered or forwarded to the DA operator equal to the rate for Directory Assistance Service call, as set forth in 31.9 following plus the rate for a Tandem Switched Directory Transport call, if applicable, will be applies to the customer's charges.

9. Directory Assistance Service (Cont'd)

9.5 Payment Arrangements (Cont'd)

9.5.7 Credit Allowance for DA Service (Cont'd)

(B) In addition to the credit as set forth in (A) preceding, when a DA operator or DA equipment provides an incorrect number for a call and the customer reports such occurrences to the Telephone Company, a credit allowance for such DA call will apply. The credit will be as set forth in (C) following. When the customer reports such a call and the number requested, the number provided and the reason the number provided is incorrect, the number of calls for which a credit will apply will be developed by the Telephone Company in cooperation with the customer.

(C) When a DA call is not completed due to the failure of Directory Access Service to DA locations, DA access equipment or DA operator activities, a credit allowance for the Switched Access Service portion in the originating LATA of such DA call will apply. When the customer reports such a call and DA number dialed, time of the call and the date of the call, the number of calls for which a credit will apply will be developed by the Telephone Company in cooperation with the customer. The credit will be as set forth in 31.9 following.

(D) Credit allowances for other service interruption will be provided as set forth in Section 2.8.1.1 preceding.

9.6 Rate Regulations

9.6.1 Rate Categories

There are two rate categories which apply to Directory Access Service:

- Directory Transport (described in (A) following)

- Directory Assistance Service Call (described in (B) following).

9. Directory Assistance Service (Cont'd)

9.6 Rate Regulations (Cont'd)

9.6.1 Rate Categories (Cont'd)

(A) Directory Transport

The Directory Transport rate category provides for the transmission facilities and transport termination used for Directory Access Service in transporting a call between the customer's premises, multiplexing node or virtual collocation arrangement and the DA location. Directory Transport provides a two-way voice frequency transmission path using facilities set forth in Section 6.5 preceding.

(B) Directory Assistance Service Call

The DA Service call rate category provides for the use of Telephone Company DA equipment and DA operators.

9.6.2 Application of Rates and Charges

(A) The Directory Transport rate is dependent on the type of Directory Transport chosen by the customer. Entrance Facilities, Direct Trunked DA Transport and Dedicated Tandem Trunk Ports apply on a monthly basis. The regulations pertaining to Entrance Facilities, Direct Trunked Transport and Dedicated Tandem Trunk Ports are set forth in Section 6. preceding.

Tandem Switched DA Transport as described in 9.2.1(C)(2) preceding is comprised of a Termination per call rate, a Facility per mile per call rate, a Tandem Switching and a DA Transport Multiplexing per call rate. The Tandem Switched DA Transport rates apply per call answered by or forwarded to a DA operator. Mileage measurement is set forth in 9.6.3 following.

In the states where Expanded Interconnection has become operational, usage rates for Tandem Switched Directory Transport Service and Credit Allowances for DA Service are arranged in pricing zones. The pricing zone for each serving wire center in the states where Expanded Interconnection has become operational is specified in the NATIONAL EXCHANGE CARRIER ASSOCIATION, INC. TARIFF F.C.C. NO. 4.

When a customer's designated premises is served by a serving wire center located in a state other than the state in which the customer's designated premises is located, the rates for Switched Access Services for such customer shall be the Switched Access Service rates then in effect for the serving wire center from which the customer is served.

ACCESS SERVICE

9. Directory Assistance Service (Cont'd)

9.6 Rate Regulations (Cont'd)

9.6.2 Application of Rates and Charges (Cont'd)

(A) (Cont'd)

In addition, a Directory Assistance Interconnection Charge applies per call answered by or forwarded to a DA operator. The number of calls to be billed an Interconnection Charge will be accumulated by Telephone Company measuring equipment. The charge applies whether or not the DA operator provides the requested number.

(B) The charge per call for Directory Assistance Service Calls, applies for each call which has been answered by or forwarded to a DA operator. The number of calls will be accumulated by Telephone Company measuring equipment.

9. Directory Assistance Service (Cont'd)

9.6 Rate Regulations (Cont'd)

9.6.3 Mileage Measurement

The mileage for the Direct Trunked Transport Channel Mileage rate is measured from the serving wire center for the premises, wire center with SONET multiplexing capability, multiplexing node or virtual collocation arrangement of the ordering customer to the access tandem or DA location. The mileage for the Directory Transport Facility is measured from the access tandem to the DA location. Title Page notwithstanding, these two wire centers may be in different LATAs. In addition, the premises, multiplexing node or virtual collocation arrangement of the ordering customer must be in the LATA where DA service is requested or in the LATA where the DA location is located. The measurement will be performed as set forth in 6.7.11 preceding.

When the Channel Mileage is zero (i.e., the DA location and the serving wire center for the premises, multiplexing node or virtual collocation arrangement of the ordering customer are located in the same building), the Channel Mileage fixed and per mile rate does not apply.

9.7 Rates and Charges

Rates and charges are found in Section 31.9 following.