ACCESS SERVICE

ACCESS SERVICE

Regulations, rates and charges
applying to the provision of Access Service
for connection to interstate communications facilities
for interstate customers within the
operating territory of
HunTel Communications

The title and street address of this tariff's Issuing Officer are located on the bottom of each page of this tariff. Access Services are provided by means of wire, fiber optics, radio or any other suitable technology or a combination thereof.

Joe Jetensky, Manager
HunTel Communications
1605 Washington Street
Blair, NE 68008

ACCESS SERVICE

Check Sheet

Title Page, Check Sheet Pages and pages 1 to 13-1 are effective as of the date shown.

Page	Number of revision,	Page	Number of revision,
Title Page	Original	2-9	Original
Check Sheet Page 1	1st*	2-10	Original
Check Sheet Page 2	1st*	2-11	Original
Check Sheet Page 3	1st*	2-12	Original
Check Sheet Page 4	Original	2-13	Original
1	Original	2-14	Original
2	Original	2-15	Original
3	Original	2-16	Original
4	1st*	2-17	Original
5	Original	2-18	Original
6	Original	2-19	Original
7	Original	2-20	Original
8	Original	2-21	Original
9	Original	2-22	Original
10	1st*	2-23	Original
11	1st*	2-24	Original
12	1st*	2-25	Original
13	Original	2-26	Original
14	Original	2-27	Original
15	Original	2-28	Original
16	Original	2-29	Original
1-1	Original	2-30	Original
2-1	Original	2-31	Original
2-2	Original	2-32	Original
2-3	Original	2-33	Original
2-4	Original	2-34	Original
2-5	Original	2-35	Original
2-6	Original	2-36	Original
2-7	Original	2-37	Original
2-8	Original	2-38	Original

*New or Revised

Joe Jetensky, Manager
HunTel Communications
1605 Washington Street
Blair, NE 68008

ACCESS SERVICE

Check Sheet

Page	Number of revision,	Page	Number of revision,	Page	Number of revision,
2-39	Original	4-1	Original	6-14	Original
2-40	Original	4-2	Original	6-15	Original
2-41	Original	4-3	Original	6-16	Original
2-42	Original	4-4	Original	6-17	Original
2-43	Original	5-1	Original	6-18	Original
2-44	Original	5-2	Original	6-19	Original
2-45	Original	5-3	Original	6-20	Original
2-46	Original	5-4	Original	6-21	Original
2-47	Original	5-5	Original	6-22	Original
2-48	Original	5-6	Original	6-23	Original
2-49	Original	5-7	Original	6-24	Original
2-50	Original	5-8	Original	6-25	Original
2-51	Original	5-9	Original	6-26	Original
2-52	Original	5-10	Original	6-27	Original
2-53	Original	5-11	Original	6-28	Original
2-54	Original	5-12	Original	6-29	Original
2-55	1st*	5-13	Original	6-30	Original
2-56	1st*	5-14	Original	6-31	Original
2-57	Original	5-15	Original	6-32	Original
2-58	1st*	5-16	Original	6-33	Original
2-59	Original	5-17	Original	6-34	Original
2-60	Original	5-18	Original	6-35	Original
2-61	Original	6-1	Original	6-36	Original
2-62	1st*	6-2	1st*	6-37	Original
2-63	Original	6-3	Original	6-38	Original
2-64	1st*	6-4	Original	6-39	Original
2-65	1st*	6-5	Original	6-40	Original
2-66	Original	6-6	Original	6-41	Original
2-67	1st*	6-7	Original	6-42	Original
2-68	Original	6-8	Original	6-43	Original
2-69	Original	6-9	Original	6-44	Original
2-70	1st*	6-10	Original	6-45	Original
2-71	1st*	6-11	Original	6-46	Original
2-72	Original	6-12	Original	6-47	Original
3-1	Original	6-13	Original	6-48	Original

*New or Revised

Joe Jetensky, Manager
HunTel Communications
1605 Washington Street
Blair, NE 68008

ACCESS SERVICE
Check Sheet

Page	Number of revision,	Page	Number of revision,	Page	Number of revision,
6-49	Original	6-85	Original	7-17	Original
6-50	Original	6-86	Original	7-18	Original
6-51	Original	6-87	Original	7-19	Original
6-52	Original	6-88	Original	7-20	Original
6-53	Original	6-89	Original	7-21	Original
6-54	Original	6-90	Original	7-22	Original
6-55	Original	6-91	Original	7-23	Original
6-56	Original	6-92	Original	7-24	Original
6-57	Original	6-93	Original	7-25	Original
6-58	Original	6-94	Original	7-26	Original
6-59	Original	6-95	Original	7-27	Original
6-60	Original	6-96	Original	7-28	Original
6-61	Original	6-97	Original	7-29	Original
6-62	Original	6-98	Original	7-30	Original
6-63	Original	6-99	Original	7-31	Original
6-64	Original	6-100	Original	7-32	Original
6-65	Original	6-101	Original	7-33	Original
6-66	Original	6-102	Original	7-34	Original
6-67	Original	6-103	Original	7-35	Original
6-68	Original	6-104	Original	7-36	Original
6-69	Original	7-1	Original	7-37	Original
6-70	Original	7-2	Original	7-38	Original
6-71	Original	7-3	Original	8-1	Original
6-72	Original	7-4	Original	8-2	Original
6-73	Original	7-5	Original	8-3	Original
6-74	Original	7-6	Original	8-4	Original
6-75	Original	7-7	Original	8-5	Original
6-76	Original	7-8	Original	8-6	Original
6-77	Original	7-9	Original	8-7	Original
6-78	Original	7-10	Original	8-8	Original
6-79	Original	7-11	Original	8-9	Original
6-80	Original	7-12	Original	9-1	Original
6-81	Original	7-13	Original	9-2	Original
6-82	1st*	7-14	Original	9-3	Original
6-83	Original	7-15	Original	9-4	Original
6-84	Original	7-16	Original	9-5	Original

*New or Revised

Joe Jetensky, Manager
HunTel Communications
1605 Washington Street
Blair, NE 68008

ACCESS SERVICE

Check Sheet

Page	Number of revision,	Page	Number of revision,	Page	Number of revision,
9-6	Original	11-31	Original		
9-7	Original	11-32	Original		
9-8	Original	11-33	Original		
9-9	Original	11-34	Original		
9-10	Original	11-35	Original		
9-11	Original	11-36	Original		
11-1	Original	11-37	Original		
11-2	Original	11-38	Original		
11-3	Original	11-39	Original		
11-4	Original	11-40	Original		
11-5	Original	11-41	Original		
11-6	Original	11-42	Original		
11-7	Original	11-43	Original		
11-8	Original	11-44	Original		
11-9	Original	11-45	Original		
11-10	Original	11-46	Original		
11-12	Original	11-47	Original		
11-13	Original	11-48	Original		
11-14	Original	11-49	Original		
11-15	Original	11-50	Original		
11-16	Original	11-51	Original		
11-17	Original	12-1	1st		
11-18	Original	12-2	1st*		
11-19	Original	12-3	Original		
11-20	Original	12-4	3rd*		
11-21	Original	12-5	Original		
11-22	Original	12-6	Original		
11-23	Original	12-7	Original		
11-24	Original	12-8	Original		
11-25	Original	12-9	Original		
11-26	Original	12-10	Original		
11-27	Original	12-11	Original		
11-28	Original	13-1	Original		
11-29	Original				
11-30	Original				

*New or Revised

Joe Jetensky, Manager
HunTel Communications
1605 Washington Street
Blair, NE 68008

ACCESS SERVICE

TABLE OF CONTENTS

Joe Jetensky, Manager
HunTel Communications
1605 Washington Street
Blair, NE 68008

ACCESS SERVICE

2. GENERAL REGULATIONS (cont'd.)

Joe Jetensky, Manager
HunTel Communications
1605 Washington Street
Blair, NE 68008

ACCESS SERVICE

Joe Jetensky, Manager
HunTel Communications
1605 Washington Street
Blair, NE 68008

ACCESS SERVICE

ACCESS SERVICE

7. SPECIAL ACCESS SERVICE (Cont'd)

Joe Jetensky, Manager
HunTel Communications
1605 Washington Street
Blair, NE 68008

ACCESS SERVICE

Joe Jetensky, Manager
HunTel Communications
1605 Washington Street
Blair, NE 68008

ACCESS SERVICE

Joe Jetensky, Manager
HunTel Communications
1605 Washington Street
Blair, NE 68008

ACCESS SERVICE

Joe Jetensky, Manager
HunTel Communications
1605 Washington Street
Blair, NE 68008

ACCESS SERVICE

CONCURRING CARRIERS

NO CONCURRING CARRIERS

CONNECTING CARRIERS

NO CONNECTING CARRIERS

OTHER PARTICIPATING CARRIERS

NO OTHER PARTICIPATING CARRIERS

REGISTERED SERVICE MARKS	REGISTERED TRADEMARKS
NONE	NONE

Joe Jetensky, Manager
HunTel Communications
1605 Washington Street
Blair, NE 68008

ACCESS SERVICE

EXPLANATION OF SYMBOLS USED IN TARIFF

C-	to signify a changed regulation
D-	to signify a discontinued rate or regulation
I-	to signify an increased rate of charge
M-	to signify a relocation of material with no change
N-	to signify new material or a new rate or regulation
R-	to signify a reduced rate or charge
S-	to signify reissued material without change
T-	to signify a change in text only
Z-	to signify a correction

EXPLANATION OF ABBREVIATIONS

ac	-Alternating current
ANI	-Automatic Number Identification
AT&T	-American Telephone and Telegraph Company
BD	-Business Day
BHMC	-Busy Hour Minutes of Capacity
BNA	-Bill Name and Address
BTN	-Billed Telephone Number
CCS	-Common Channel Signaling
CCSN	-Common Channel Signaling Network
CCSAC	-Common Channel Signaling Access Capability
CN	-Charge Number (N)
CO	-Central Office
CNP	-Charge Number Parameter
Cont'd	-Continued
CPE	-Customer Premises Equipment
CPN	-Calling Party Number
CSP	-Carrier Selection Parameter
DA	-Directory Assistance
dB	-Decibel
dc	-Direct current
EPL	-Echo Path Loss
ESS	-Electronic Switching System
ESSX	-Electronic Switching System Exchange
f	-Frequency
FCC	-Federal Communications Commission
FX	-Foreign Exchange

ACCESS SERVICE

EXPLANATION OF ABBREVIATIONS (Cont'd)

Hz	-Hertz
IC	-Interexchange Carrier
ICB	-Individual Case Basis
kbps	-Kilobits per second
kHz	-Kilohertz
LATA	-Local Access and Transport Area
MMUC	-Minimum Monthly Usage Charge
MRC	-Monthly Recurring Charge
MTS	-Message Telecommunications
N/A	-Not Applicable
NPA	-Numbering Plan Area
NRC	-Nonrecurring Charge
NTS	-Non-Traffic Sensitive
NXX	-Three-Digit Central Office Code
PBX	-Private Branch Exchange
PCM	-Pulse Code Modulation
PI	-Priority Installation
POT	-Point of Termination
PR	-Priority Restoration
PSTN	-Public Switched Telephone Network (N)
SAC	-Service Access Code
SNAL	-Signaling Network Access Link
SP	-Signaling Point
SPOI	-Signaling Point of Interface
SRL	-Singing Return Loss
SSN	-Switched Service Network
SS7	-Signaling System 7
SSP	-Service Switching Point
STP	-Signaling Transfer Point

ACCESS SERVICE

EXPLANATION OF ABBREVIATIONS (Cont'd)

TDM	-Time Division Multiplexing	(N)
TSP	-Telecommunications Service Priority	
TV	-Television	
USOC	-Uniform Service Order Code	
VG	-Voice Grade	
V&H	-Vertical & Horizontal	
WATS	-Wide Area Telecommunications Service(s)	

REFERENCE TO OTHER TARIFFS

Whenever reference is made in this tariff to other tariffs of the Telephone Company, the reference is to the tariffs in force as of the effective date of this tariff, and to amendments thereto and successive issues thereof.

Joe Jetensky, Manager
HunTel Communications
1605 Washington Street
Blair, NE 68008

ACCESS SERVICE

USE OF THE TARIFF

This tariff contains the regulations, rates and charges applicable to the provision of Access Service by the Issuing Carrier listed on Title Page 1.

The regulations applicable to the provision of Access Service are contained in Sections 1 through 12.

Section 13 applies to the rates and regulations for non-access service reciprocal compensation to be paid to the Issuing Carrier pursuant to Section 251(b) of the Telecommunications Act of 1996.

The Issuing Carrier's rates and charges for all Access Services are shown in Section 12. If the Issuing Carrier does not presently have a rate for one of the rate elements shown in Section 12, the rate is shown as "Not Applicable" (N/A). Upon receipt of an order by a customer for the service not presently offered, the Issuing Carrier will file with the F.C.C. the appropriate information necessary to establish rates.

Joe Jetensky, Manager
HunTel Communications
1605 Washington Street
Blair, NE 68008

ACCESS SERVICE

REFERENCE TO TECHNICAL PUBLICATIONS

The following technical publications are referenced in this tariff and may be obtained from Telcordia Technologies, Inc. (formerly Bell Communications Research, Inc., - Bellcore), Direct Sales, 8 Corporate Place, Piscataway, NJ 08854-4156 (www.telcordia.com).

Technical Reference:

PUB 41004 (MDP-326-584) Data Communications Using Voiceband Private Line Channels
Issued: October, 1973

PUB 62310 (MDP-326-726) Digital Data System Channel Interface Specification
Issued: September, 1983

PUB 62411 High Capacity Digital Service Channel Interfact Specification
Issued: September 1983, Addendum October 1984

TR-NWT-000335, Issue 3 Voice Grade Switched Access Service - Transmission Parameter Limits and Interface Combinations
Issued: May 1993

TR-TSY-000335, Issue 2 Voice Grade Special Access Service - Transmission Parameter Limits and Interface Combinations
Issued: May 1990

TR-NPL-000336 Metallic and Telegraph Grade Special Access Service - Transmission Parameter Limits and Interface Combinations
Issued: October 1987

TR-NWT-000341, Issue 2 Digital Data Special Access Service - Transmission Parameter Limits and Interface Combinations
Issued: February 1993

TR-TSV-001370, Issue 1 Generic Requirements for Exchange Access Frame Relay PVC Service
Issued: May 1993

ACCESS SERVICE

REFERENCE TO TECHNICAL PUBLICATIONS (Cont'd)

GR-342-CORE, Issue 1 High Capacity Digital Special Access Service –
Transmission Parameters, Limits and Interface Combinations
Issued: December 1995

Telecommunications Transmission Engineering
Volume 3 – Networks and Services (Chapters 6 and 7)
Third Edition, 1989
Issued: August 1989

ACCESS SERVICE

REFERENCE TO TECHNICAL PUBLICATIONS (Cont'd)

The following publications are referenced in this tariff and may be obtained from the Government Printing Office, Superintendent of Documents, Document Control Branch, 941 N. Capitol St., N.E., Washington, D.C. 20401.

Telecommunications Service Priority (TSP) System for National Security Emergency Preparedness (NSEP) Service Vendor Handbook, National Communications System (NCSH 3-1-2)
Issued: July 1990

Telecommunications Service Priority (TSP) System for National Security Emergency Preparedness (NSEP) Service User Manual, National Communications System (NCSM 3-1-1)
Issued: July 1990

ACCESS SERVICE

1. **Application of Tariff**

1.1 This tariff contains regulations, rates and charges applicable to the provision of End User Access, Switched Access, Special Access Services, Lifeline Assistance, Universal Service Fund, and other miscellaneous services, hereinafter referred to collectively as service(s), provided by the Issuing Carrier of this tariff hereinafter referred to as the Telephone Company, to Customer(s).

1.2 The provision of such services by the Telephone Company as set forth in this tariff does not constitute a joint undertaking with the customer for the furnishing of any service.

1.3 The use of any service provided by the Telephone Company shall constitute an order for service and the user of the service is obligated to pay the Telephone Company for that service in accordance with the provisions of this tariff.

Joe Jetensky, Manager
HunTel Communications
1605 Washington Street
Blair, NE 68008

ACCESS SERVICE

2. General Regulations

2.1 Undertaking of the Telephone Company

2.1.1 Scope

(A) The Telephone Company does not undertake to transmit messages under this tariff.

(B) The Telephone Company shall be responsible only for the installation, operation and maintenance of the service it provides.

(C) The Telephone Company will, for maintenance purposes, test its services only to the extent necessary to detect and/or clear troubles.

(D) Services are provided 24 hours daily, seven days per week except as set forth in other sections of this tariff.

2.1.2 Limitations

(A) The customer may assign or transfer the use of services under this tariff if there is no interruption in or relocation of services. The assignee or transferee must agree to assume all outstanding indebtedness for services provided under this tariff and any termination liability associated with the services provided. The customer will remain jointly liable with the assignee or transferee for any obligations existing at the time of the assignment.

Joe Jetensky, Manager
HunTel Communications
1605 Washington Street
Blair, NE 68008

ACCESS SERVICE

2. **General Regulations**

2.1 Undertaking of the Telephone Company (Cont'd)

2.1.2 Limitations (Cont'd)

(A) (Cont'd)

Prior to assignment, the Telephone Company must acknowledge in writing that all requirements have been met. Acknowledgement will be made within fifteen days after the Telephone Company has been notified of the proposed assignment.

(B) All services offered in this tariff will be provided on a first-come first-served basis except as provided for following. The regulations for the installation and restoration of Telecommunications Service Priority (TSP) System Services shall be subject to Part 64.401, Appendix A, of the Federal Communications Commissions Rules and Section 10, following.

2.1.3 Liability

(A) Except in the case of willful misconduct, for which the Telephone Company's liability is not limited by this tariff, the Telephone Company's liability for damages shall not exceed an amount equal to the proportionate tariff charge for the period during which the service was affected. This liability for damages shall be in addition to any amounts that may be due the customer as described in Section 2.4.3, following.

Joe Jetensky, Manager
HunTel Communications
1605 Washington Street
Blair, NE 68008

ACCESS SERVICE

2. **General Regulations (Cont'd)**

2.1 Undertaking of the Telephone Company (Cont'd)

2.1.3 Liability (Cont'd)

(B) The Telephone Company shall not be liable for any act or omission of any other carrier or customer providing a portion of a service.

(C) The Telephone Company is not liable for damages to the customer premises resulting from the furnishing of a service, including the installation and removal of equipment and associated wiring.

(D) The Telephone Company shall be indemnified, defended and held harmless by the end user against any claim, loss or damage arising from the end user's use of services offered under this tariff, involving:

(1) Claims for libel, slander, invasion of privacy, or infringement of copyright or unauthorized use of any trademark, trade name, or servicemark arising out of the material, data, information, or other content arising from the end user's own communications;

(2) Claims for patent infringement arising from the end user's acts combining or using the service furnished by the Telephone Company in connection with facilities or equipment furnished by the end users or IC or;

(3) Any claim, loss or damage arising from the use of services offered under this tariff including but not limited to claims by subscribers to or users of any services provided to end users; and

(4) All other claims arising out of any act or omission of the end user in the course of using services provided pursuant to this tariff.

Joe Jetensky, Manager
HunTel Communications
1605 Washington Street
Blair, NE 68008

ACCESS SERVICE

2. **General Regulations (Cont'd)**

2.1 Undertaking of the Telephone Company (Cont'd)

2.1.3 Liability (Cont'd)

(E) The Telephone Company shall be indemnified, defended and held harmless by the IC against any claim, loss or damage arising from the IC's use of services offered under this tariff involving;

(1) Claims for libel, slander, invasion of privacy, or infringement of copyright or unauthorized use of any trademark, trade name, or service mark arising out of the material, data, information, or other content arising from the IC's own communications;

(2) Claims for patent infringement arising from the IC's acts combining or using the service furnished by the Telephone Company in connection with facilities or equipment furnished by the end user or IC or;

(3) Any claim, loss or damage arising from the use of services offered under this tariff including but not limited to claims by subscribers to or users of any services provided to or resold by the IC; and

(4) All other claims arising out of any act or omission of the IC in the course of using services provided pursuant to this tariff.

(F) The Telephone Company's failure to provide or maintain services under this tariff shall be excused by labor difficulties, governmental orders, civil commotions, criminal actions taken against the Telephone Company, Acts of God and other circumstances beyond the Telephone Company's reasonable control, subject to the Credit Allowance for a Service Interruption as set forth in Section 2.4.3, following.

(G) The Telephone company shall be indemnified, defended and held harmless by the Customer, against any claim, loss or damage arising from the use of services offered under this tariff including, but not limited to, claims by subscribers to services provided to the Customer, and users of services provided by or resold by the Customer.

Joe Jetensky, Manager
HunTel Communications
1605 Washington Street
Blair, NE 68008

ACCESS SERVICE

2. **General Regulations** (Cont'd)

2.1 Undertaking of the Telephone Company (Cont'd)

2.1.4 Provision of Services

The Telephone Company's obligation to furnish the services described in this tariff is dependent upon its ability to provide such service after provision has been made for the Telephone Company's exchange services.

2.1.5 Installation and Termination of Services

The services provided under this tariff will include any entrance cable or drop wiring and wire or intrabuilding cable to that point where provision is made for termination of the Telephone Company's outside distribution network facilities at a suitable location inside a customer premises and will be installed by the Telephone Company to such Point of Termination. Wire required within a building to extend Access Service facilities will be provided, at the Customer's request, on a time sensitive charge basis. The labor rates for the installation of such wire are the same as those set forth in Section 12.4(B), following, for Other Labor.

2.1.6 Maintenance of Services

The services provided under this tariff shall be maintained by the Telephone Company. The customer or others may not rearrange, move, disconnect, remove or attempt to repair any facilities provided by the Telephone Company, other than by connection or disconnection to any interface means used, except with the written consent of the Telephone Company.

ACCESS SERVICE

2. **General Regulations** (Cont'd)

2.1 Undertaking of the Telephone Company (Cont'd)

2.1.7 Changes and Substitutions

Except as provided for equipment and systems subject to FCC Part 68 Regulations at 47 C.F.R. section 68.110(b), the Telephone Company may, where such action is reasonably required in the operation of its business, (A) change any facilities used in providing service under this tariff, (B) change minimum protection criteria, (C) change operating or maintenance characteristics of facilities or (D) change operations or procedures of the Telephone Company. The Telephone Company shall not be responsible if the change renders customer furnished services obsolete or requires modification of the customer-furnished services. If such change materially affects the operating characteristics of the facility, the Telephone Company will provide reasonable notification to the customer in writing. Reasonable time will be allowed for any redesign and implementation required by the changes made. The Telephone Company will work cooperatively with the customer to determine reasonable notification procedures.

2.1.8 Refusal and Discontinuance of Service

(A) Unless the provisions of Sections 2.2.1(B) or 2.5, following apply, if a customer fails to comply with Section 2.1.6, preceding, or Sections 2.2.2, 2.3.1, 2.3.4, 2.3.5, or 2.4, following, including any payments to be made by it on the dates and times herein specified, the Telephone Company may on thirty (30) day's written notice by Certified U.S. Mail to the person designated by that customer to receive such notices of noncompliance, refuse additional applications for service and/or refuse to complete any pending orders for service by the non-complying customer at any time thereafter.

Joe Jetensky, Manager
HunTel Communications
1605 Washington Street
Blair, NE 68008

ACCESS SERVICE

2. **General Regulations** (Cont'd)

2.1 Undertaking of the Telephone Company (Cont'd)

2.1.8 Refusal and Discontinuance of Service (Cont'd)

(A) (Cont'd)

If the Telephone Company does not refuse additional applications for service on the date specified in the thirty (30) days notice, and the customer's non-compliance continues, nothing contained herein shall preclude the Telephone Company's right to refuse additional applications for service to the non-complying customer without further notice.

(B) Unless the provisions of Sections 2.2.1(B) or 2.5, following apply, if a customer fails to comply with Section 2.1.6, preceding, or Sections 2.2.2, 2.3.1, 2.3.4, 2.3.5, or 2.4, following, including any payments to be made by it on the dates and times herein specified, the Telephone Company may, on thirty (30) day's written notice by Certified U.S. Mail to the person designated by that customer to receive such notices of non-compliance, discontinue the provision of the services to the non-complying customer at any time thereafter. In the case of such discontinuance, all applicable charges, including termination charges, shall become due. If the Telephone Company does not discontinue the provision of the services involved on the date specified in the thirty (30) day's notice, and the customer's non-compliance continues, nothing contained herein shall preclude the Telephone Company's right to discontinue the provision of the services to the non-complying customer without further notice.

Joe Jetensky, Manager
HunTel Communications
1605 Washington Street
Blair, NE 68008

ACCESS SERVICE

2. **General Regulations** (Cont'd)

2.1 Undertaking of the Telephone Company (Cont'd)

2.1.8 Refusal and Discontinuance of Service (Cont'd)

(C) When access service is provided by more than one Telephone Company, the companies involved in providing the joint service may individually or collectively deny service to a customer for nonpayment. Where the Telephone Company(s) affected by the nonpayment is incapable of effecting discontinuance of service without cooperation from the other joint providers of Switched Access Service, such other Telephone Company(s) will, if technically feasible, assist in denying the joint service to the customer. Service denial for such joint service will only include calls originating or terminating within, or transiting, the operating territory of the Telephone Companies initiating the service denial for nonpayment. When more than one of the joint providers must deny service to effectuate termination for nonpayment, in cases where a conflict exists in the applicable tariff provisions, the tariff regulations of the end office Telephone Company shall apply for joint service discontinuance.

Joe Jetensky, Manager
HunTel Communications
1605 Washington Street
Blair, NE 68008

ACCESS SERVICE

2. **General Regulations** (Cont'd)

2.1 Undertaking of the Telephone Company (Cont'd)

2.1.8 Refusal and Discontinuance of Service (Cont'd)

(D) If the Customer fails to comply with Section 3 of this tariff (Lifeline Assistance and Universal Service Fund charges) including any Customer's failure to make payments on the date and times specified therein, the Telephone Company, may, on thirty days' written notice to the Customer by Certified U.S. Mail, take any of the following actions: (1) refuse additional applications for service and/or (2) refuse to complete any pending orders for service, (3) discontinue the provision of service to the Customer. In the case of discontinuance, all applicable charges including termination charges shall become due.

2.1.9 Reserved for future use.

ACCESS SERVICE

2. **General Regulations** (Cont'd)

2.1 Undertaking of the Telephone Company (Cont'd)

2.1.10 Notification of Service-Affecting Activities

The Telephone Company will provide the customer reasonable notification of service-affecting activities that may occur in normal operation of its business. Such activities may include, but are not limited to, equipment additions, removals, and routine preventive maintenance. Generally, such activities are not individual customer service specific; they affect many customer services. No specific advance notification period is applicable to all service activities. The Telephone Company will work cooperatively with the customer to determine the notification requirements.

2.1.11 Provision and Ownership of Telephone Numbers

The Telephone Company reserves the reasonable right to assign, designate or change telephone numbers associated with Access Services, or the Telephone Company serving central office prefixes associated with such numbers, when necessary in the conduct of its business. Should it become necessary to make a change, the Telephone Company will furnish to the customer 6 months notice, by certified mail, of the effective date and an explanation of the reason(s) for such change(s).

2.1.12 Coordination with Respect to Network Contingencies

The Telephone Company intends to work cooperatively with the customer to develop network contingency plans in order to maintain maximum network capability following natural or man-made disasters, which affect telecommunications services.

2.1.13 Nonchargeable Confirmation Services

(A) Billed Number Screening (BNS): At the request of the customer, the Telephone Company business office will confirm BNS codes associated with a line to which a call is to be billed.

(B) Originating Line Screening (OLS): At the request of the customer, the Telephone Company business office will confirm OLS codes associated with an exchange access line from which a call originates.

Joe Jetensky, Manager
HunTel Communications
1605 Washington Street
Blair, NE 68008

ACCESS SERVICE

2. **General Regulations** (Cont'd)

2.2 Use

2.2.1 Interference or Impairment

(A) The facilities and equipment provided by the customer which are used in conjunction with Telephone Company facilities in the provision of Access Service shall not interfere with or impair the provision of service by the Telephone Company.

(B) If interference as described in (A), above exists, except for equipment subject to the F.C.C. Part 68 rules in 47 C.F.R. Section 68.108, when practicable, the Telephone Company will notify the customer that service will be temporarily disconnected until the problem is corrected. When prior notice is not practical, the Telephone Company may temporarily disconnect services without prior notification to the customer. The customer will be notified of the action as soon as possible and given the opportunity to correct the problem. During the period of discontinuance, the credit allowance for service interruptions as set forth in Section 2.4.3, following, does not apply.

2.2.2 Unlawful Use

The service provided under this tariff shall not be used for an unlawful purpose.

ACCESS SERVICE

2. **General Regulations** (Cont'd)

2.3 Obligations of the Customer

2.3.1 Damages

The customer shall reimburse the Telephone Company for damages to the Telephone Company facilities utilized to provide services under this tariff caused by the negligence or willful act of the customer, or resulting from the customer's improper use of the Telephone Company facilities, or due to malfunction of any facilities or equipment provided by other than the Telephone Company. Nothing in the foregoing provision shall be interpreted to hold one customer liable for another customer's actions. The Telephone Company will, upon reimbursement for damages, cooperate with the customer in prosecuting a claim against the person causing such damage and the customer shall be subrogated to the right of recovery by the Telephone Company for the damages to the extent of such payment.

2.3.2 Ownership of Facilities

Facilities utilized by the Telephone Company to provide service under the provisions of this tariff shall remain the property of the Telephone Company. Such facilities shall be returned to the Telephone Company by the customer, whenever requested, within a reasonable period following the request in as good condition as reasonable wear will permit. Any cost of repair or replacement for unreasonable wear or damage will be billed to the customer who utilized the equipment.

ACCESS SERVICE

2. **General Regulations** (Cont'd)

2.3 Obligations of the Customer (Cont'd)

2.3.3 Equipment Space and Power

The customer shall furnish or arrange to have furnished to the Telephone Company, at no charge, equipment space and electrical power required by the Telephone Company to provide services under this tariff at the points of termination of such services. The selection of ac or dc power shall be mutually agreed to by the customer and the Telephone Company. The customer shall also make necessary arrangements in order that the Telephone Company will have access to such space at reasonable times for installing, testing, repairing or removing Telephone Company services.

2.3.4 Availability for Testing

The services provided under this tariff shall be available to the Telephone Company at times mutually agreed upon in order to permit the Telephone Company to make tests and adjustments appropriate for maintaining the services in satisfactory operating condition. Such tests and adjustments shall be completed within a reasonable time. No credit will be allowed for any interruptions involved during such tests and adjustments.

ACCESS SERVICE

2. **General Regulations** (Cont'd)

2.3 Obligations of the Customer (Cont'd)

2.3.5 Balance

All signals for transmission over the services provided under this tariff shall be delivered by the customer balanced to ground except for ground start, duplex (DX) and McCulloh-Loop (Alarm System) type signaling and dc telegraph transmission at speeds of 75 baud or less.

2.3.6 Design of Customer Services

Subject to the provisions of Section 2.1.7, preceding, the customer shall be solely responsible, at its own expense, for the overall design of its services and for any redesigning or rearrangement of its services which may be required because of changes in facilities, operations or procedures of the Telephone Company, minimum protection criteria or operating or maintenance characteristics of the facilities.

2.3.7 Reference to the Telephone Company

The customer may advise End Users that certain services are provided by the Telephone Company in connection with the service the customer furnishes to End Users; however, the customer shall not represent that the Telephone Company jointly participates in the customer's services.

ACCESS SERVICE

2. **General Regulations** (Cont'd)

2.3 Obligations of the Customer (Cont'd)

2.3.8 Claims and Demands for Damages

The customer shall defend, indemnify and hold harmless the Telephone Company from and against any suits, claims, losses or damages, including punitive damages, attorney fees and court costs by third persons arising out of the construction, installation, operation, maintenance, or removal of the customer's circuits, facilities, or equipment connected to the Telephone Company's services provided under this tariff, including, without limitation, Worker's Compensation claims, actions for infringement of copyright and/or unauthorized use of program material, libel and slander actions based on the content of communications transmitted over the customer's circuits, facilities or equipment, and proceedings to recover taxes, fines, or penalties for failure of the customer to obtain or maintain in effect any necessary certificates, permits, licenses, or other authority to acquire or operate the services provided under this tariff; provided, however, the foregoing indemnification shall not apply to suits, claims, and demands to recover damages for damage to property, death, or personal injury unless such suits, claims or demands are based on the tortuous conduct of the customer, its officers, agents or employees. The customer shall defend, indemnify and save harmless the Telephone Company from and against any suits, claims, losses or damages, including punitive damages, attorney fees and court costs by the customer or third parties arising out of any act or omission of the customer in the course of using services provided under this tariff.

Joe Jetensky, Manager
HunTel Communications
1605 Washington Street
Blair, NE 68008

ACCESS SERVICE

2. **General Regulations** (Cont'd)

2.3 Obligations of the Customer (Cont'd)

2.3.9 Jurisdictional Report Requirements

(A) Jurisdictional Reports - Switched Access

(1) (a) Except in cases where the Telephone Company is billing according to actuals by jurisdiction, when a customer orders Feature Group A and/or Feature Group B Switched Access Service the customer shall, in its order, state the projected interstate percentage for interstate usage for each Feature Group A and/or Feature Group B Switched Access Service group ordered. If the customer discontinues some but not all of the Feature Group A and/or Feature Group B Switched Access Services in a group, it shall provide the projected interstate percentage for such services which are discontinued.

(b) Pursuant to Federal Communications Commission Order FCC 85-145 adopted April 16, 1985, interstate usage is to be developed as though every call that enters a customer network at a point within the same state as that in which the called station (as designated by the called station telephone number) is situated is an intrastate communication and every call for which the point of entry is in a state other than that where the called station (as designated by the called station telephone number) is situated is an interstate communication.

ACCESS SERVICE

2. **General Regulations** (Cont'd)

2.3 Obligations of the Customer (Cont'd)

2.3.9 Jurisdictional Report Requirements (Cont'd)

(A) Jurisdictional Reports - Switched Access (Cont'd)

(1) (Cont'd)

(c) Except in cases where the Telephone Company is billing according to actuals by jurisdiction, the projected interstate percentages will be used by the Telephone Company to apportion the usage between interstate and intrastate until a revised report is received as set forth in (6), following.

(2) All single Feature Group A and B Switched Access Service usage and charges will be apportioned by the Telephone Company between interstate and intrastate. The projected interstate percentage reported as set forth in 1(a) and 1(b), preceding, will be used to make such apportionment.

(3) For multiline hunt group or trunk group arrangements where either the interstate or the intrastate charges are based on measured usage, the interstate Feature Group A and/or Feature Group B Switched Access Service(s) information reported as set forth in (1), preceding, will be used to determine the charges as follows:

ACCESS SERVICE

2. **General Regulations** (Cont'd)

2.3 Obligations of the Customer (Cont'd)

2.3.9 Jurisdictional Report Requirements (Cont'd)

(A) Jurisdictional Reports - Switched Access (Cont'd)

(3) (Cont'd)

For all groups the number of access minutes (either measured or assumed) for a group will be multiplied by the projected interstate percentage to develop the interstate access minutes. The number of access minutes for the group minus the developed interstate access minutes for the group will be the developed intrastate access minutes.

(4) When a customer orders Feature Group D Switched Access Service(s), the customer may provide the projected interstate percentage for interstate usage for each end office group in its order. This percentage is subject to audit by the Telephone Company as set forth in Section 2.3.9(A)(7), following.

If the customer does not provide the projected interstate percentage for interstate usage, the Telephone Company will, where the jurisdiction can be determined from the call detail, determine the projected interstate percentage as follows:

Joe Jetensky, Manager
HunTel Communications
1605 Washington Street
Blair, NE 68008

ACCESS SERVICE

2. **General Regulations** (Cont'd)

2.3 Obligations of the Customer (Cont'd)

2.3.9 Jurisdictional Report Requirements (Cont'd)

(A) Jurisdictional Reports - Switched Access (Cont'd)

(4) (Cont'd)

(i) For originating access minutes, the projected interstate percentage will be developed on a monthly basis by end office when the Feature Group D Switched Access Service access minutes are measured by dividing the measured interstate originating access minutes (the access minutes where the calling number is in one state and the called number is in another state) by the total originating access minutes when the call detail is adequate to determine the appropriate jurisdiction.

ACCESS SERVICE

2. **General Regulations** (Cont'd)

2.3 Obligations of the Customer (Cont'd)

2.3.9 Jurisdictional Report Requirements (Cont'd)

(A) Jurisdictional Reports - Switched Access (Cont'd)

(4) (Cont'd)

(ii) For terminating access minutes, the data used by the Telephone Company to develop the projected interstate percentage for originating access minutes will be used to develop projected interstate percentage for such terminating access minutes. When originating call details are insufficient to determine the jurisdiction for the call, the customer shall supply the projected interstate percentage or authorize the Telephone Company to use the Telephone Company developed percentage. This percentage shall be used by the Telephone Company as the interstate percentage for such call detail. The Telephone Company will designate the number obtained by subtracting the projected interstate percentage for originating and terminating access minutes calculated by the Telephone Company from 100 (100 - Telephone Company calculated projected interstate percentage = intrastate percentage) as the projected intrastate percentage of use.

Joe Jetensky, Manager
HunTel Communications
1605 Washington Street
Blair, NE 68008

ACCESS SERVICE

2. **General Regulations** (Cont'd)

2.3 Obligations of the Customer (Cont'd)

2.3.9 Jurisdictional Report Requirements (Cont'd)

(A) Jurisdictional Reports - Switched Access (Cont'd)

(5) Except where Telephone Company measured access minutes are used as set forth in (1) and (4), preceding, the customer reported interstate percentage of use as set forth in (1) or (4), preceding, will be used until the customer reports a different projected interstate percentage for an in service end office group. When the customer adds BHMC or trunks to an existing end office group, the customer shall furnish a Projected Interstate Usage percentage that applies to the added BHMC lines or trunks. When the customer discontinues BHMC, lines or trunks from an existing group, the customer shall furnish a projected interstate percentage for the discontinued BHMC lines or trunks in the end office group. The revised report will serve as the basis for future billing and will be effective on the next bill date. No prorating or back billing will be done based on the report.

Joe Jetensky, Manager
HunTel Communications
1605 Washington Street
Blair, NE 68008

ACCESS SERVICE

2. **General Regulations** (Cont'd)

2.3 Obligations of the Customer (Cont'd)

2.3.9 Jurisdictional Report Requirements (Cont'd)

(A) Jurisdictional Reports - Switched Access (Cont'd)

(6) Effective on the first of January, April, July and October of each year the customer shall update the interstate and intrastate jurisdictional report. The customer shall forward to the Telephone Company, to be received no later than 15 days after the first of each such month, a revised report showing the interstate and intrastate percentage of use for the past three months ending the last day of December, March, June and September, respectively, for each Switched Access Service arranged for interstate use. Additionally, where the customer utilizes FGA Switched Access Service for calls between a Primary Exchange Carrier and a Secondary Exchange Carrier within the same Extended Area Service calling area, where the Primary and Secondary Exchange Carriers are not the same Telephone Company and do not provide service under the same access service tariff, a copy of the revised report will be provided by the customer to each Secondary Exchange Carrier. Except in cases where the Telephone Company is billing according to actuals by jurisdiction, the revised report will serve as the basis for the next three months billing and will be effective on the bill date for that service. No prorating or back billing will be done based on the report.

ACCESS SERVICE

2. **General Regulations** (Cont'd)

2.3 Obligations of the Customer (Cont'd)

2.3.9 Jurisdictional Report Requirements (Cont'd)

(A) Jurisdictional Reports - Switched Access (Cont'd)

(6) (Cont'd)

If the customer does not supply the reports, the Telephone Company will assume the percentages to be the same as those provided in the last quarterly report. For those cases in which a quarterly report has never been received from the customer, the Telephone Company will assume the percentages to be the same as those provided in the order for service as set forth in (1), preceding.

(7) For Switched Access, if a billing dispute arises concerning the projected interstate percentage, the Telephone Company will ask the customer to provide the data the customer uses to determine the projected interstate percentage. The Telephone Company will not request such data more than once a year. The customer shall supply the data within 30 days of the Telephone Company's request.

Joe Jetensky, Manager
HunTel Communications
1605 Washington Street
Blair, NE 68008

ACCESS SERVICE

2. **General Regulations** (Cont'd)

2.3 Obligations of the Customer (Cont'd)

2.3.9 Jurisdictional Report Requirements (Cont'd)

(A) Jurisdictional Reports - Switched Access (Cont'd)

(8) PIUs developed as outlined in (1) through (7), preceding, are applied to usage rated Information Surcharge, Local Switching, and Tandem Switched Transport charges. Separate PIUs also developed as outlined in Sections (1) through (7), preceding, are required for flat rated Entrance Facilities, Direct Trunked Transport and Multiplexers.

(9) Upon 30 days written notice, the Telephone Company shall have the right to access all information, data and records necessary to audit, trace and verify the accuracy of the PIUs reported by the customer. Such information will be provided in a mutually agreeable format. Each party shall bear its own expenses in connection with the conduct of an Audit or Examination.

In the event that an error is found during an Audit or Examination, the Telephone Company will, in writing, bill the customer for the additional amount due. If the customer does not render payment within 31 days after the billing date for the additional amount due, a late payment charge calculated at 15% annual interest will to the portion of the payment not received in immediately available funds. Interest will be compounded monthly. The late payment charge will be calculated from the due date to and including the date that payment is actually received by the Telephone Company. Any penalty due will be included as a separate item on the next statement issued.

Joe Jetensky, Manager
HunTel Communications
1605 Washington Street
Blair, NE 68008

ACCESS SERVICE

2. **General Regulations** (Cont'd)

2.3 Obligations of the Customer (Cont'd)

2.3.9 Jurisdictional Report Requirements (Cont'd)

(B) Special Access Jurisdictional Certification

(1) Certification Requirements

When the customer orders Special Access Service, and the customer certifies to the Telephone Company in writing that more than ten percent of the traffic is interstate, the service is considered to be interstate and is provided under this Tariff. Following initial certification, should the jurisdictional nature of the customer's Special Access Service change, the customer should inform the Telephone Company in writing of the change. The effective date of the change will be the date the Telephone Company receives the customer's notice of change. No charge applies for the jurisdictional change.

ACCESS SERVICE

2. **General Regulations** (Cont'd)

2.3 Obligations of the Customer (Cont'd)

2.3.9 Jurisdictional Report Requirements (Cont'd)

(B) Special Access Jurisdictional Certification (Cont'd)

(2) Reserved for future use.

ACCESS SERVICE

2. **General Regulations** (Cont'd)

2.3 Obligations of the Customer (Cont'd)

2.3.9 Jurisdictional Report Requirements (Cont'd)

(B) Special Access Jurisdictional Certification (Cont'd)

(3) Disputes Involving Jurisdictional Certification

If a dispute arises concerning the certification of projected interstate traffic as described in (1) or (2), preceding, the Telephone Company will ask the customer to provide the data the customer used to determine that more than 10% of the traffic is interstate. The customer shall supply the data within thirty (30) days of the Telephone Company request. If the reply results in a jurisdictional change of a Special Access Service, the effective date of the change will be the date the Telephone Company receives the customer's reply. There is no charge when the customer's reply results in a jurisdictional change in the Special Access Service.

2.3.10 Determination of Interstate Charges for Mixed Interstate and Intrastate Switched Access Service

When mixed interstate and intrastate Access Service is provided, all charges (i.e., nonrecurring, monthly and/or usage) will be prorated between interstate and intrastate. The percentage provided in the reports as set forth in Section 2.3.9, preceding, will serve as the basis for prorating the charges.

Joe Jetensky, Manager
HunTel Communications
1605 Washington Street
Blair, NE 68008

ACCESS SERVICE

2. **General Regulations** (Cont'd)

2.3 Obligations of the Customer (Cont'd)

2.3.10 Determination of Interstate Charges for Mixed Interstate and Intrastate Switched Access Service (Cont'd)

The percentage of an Access Service to be charged as interstate is applied in the following manner:

(A) For monthly and nonrecurring chargeable rate elements, multiply the percent interstate use times the quantity of chargeable elements times the stated tariff rate per element.

(B) For usage sensitive (i.e., access minutes and calls) chargeable rate elements, multiply the percent interstate use times actual use times the stated tariff rate.

The interstate percentage will change as revised usage reports are submitted as set forth in Section 2.3.9, proceeding.

2.3.11 Provision for Customer Audits

Upon 30 days written notice, the customer shall have the right to access all information, data and records necessary to audit, trace and verify the accuracy of access bills rendered to the customer for usage in connection with MTS, Private Line, WATS and other services. Such information will be provided in a mutually agreeable format and shall include, but not be limited to, call details (e.g., messages and minutes of use summarized by jurisdiction, call type, end office and state). A comprehensive audit of this nature can be conducted by the customer not more than once per year. Examinations of specific questions and issues may be undertaken more frequently.

Joe Jetensky, Manager
HunTel Communications
1605 Washington Street
Blair, NE 68008

ACCESS SERVICE

2. **General Regulations** (Cont'd)

2.3 Obligations of the Customer (Cont'd)

2.3.11 Provision for Customer Audits (Cont'd)

Each party shall bear its own expenses in connection with the conduct of an Audit (review) or Examination. Special data extractions required by the customer to conduct an Audit or Examination will be paid for by the customer. For purposes of this regulation, a "special data extraction" shall mean the creation of records that cannot normally be created by the Telephone Company's currently available software programs.

If the Telephone Company changes software programs and as a result of this change previously available data records would be considered special extractions, the Telephone Company must retain the ability to extract that data for one year at no charge to the customer. After that time, the use of those data records would be considered a special data extraction, cost to be borne by the customer.

2.3.12 Discontinuance of Service by Customer

Interexchange Carriers are prohibited from unilaterally discontinuing the provision of service to the Telephone Company's local exchange service customers or otherwise blocking or impairing access traffic in the Originating Direction or the Terminating Direction.

Pursuant to this general prohibition, Interexchange Carriers may not:

(A) unilaterally block or otherwise discontinue carriage of originating access traffic (such traffic includes, but is not limited to, interexchange traffic that is originated by the Telephone Company's local exchange service customers); or

(B) unilaterally block or otherwise discontinue carriage of terminating access traffic (such traffic includes, but is not limited to, interexchange traffic originating by the Interexchange Carrier's customers and destined for termination by the Telephone Company to the Telephone Company's local exchange service customers).

ACCESS SERVICE

2. **General Regulations** (Cont'd)

2.3 Obligations of the Customer (Cont'd)

2.3.13 Discontinuance of Service by Interexchange Carriers – Procedures

(A) Notwithstanding Section 2.4.12(A), above, an Interexchange Carrier may block or otherwise discontinue carriage of originating access traffic if, prior to taking such action:

(1) the discontinuing Interexchange Carrier shall obtain a signed Letter of Authorization of Discontinuance (LOAD) from each of the Telephone Company's local exchange service customers that are presubscribed to the discontinuing Interexchange Carrier;

(2) each of the Telephone Company's local exchange service customers presubscribed to the discontinuing Interexchange Carrier have selected another presubscribed Interexchange Carrier and that newly selected presubscribed Interexchange Carrier has commenced service to that customer; and

(3) the discontinuing Interexchange Carrier obtains all necessary legal and regulatory authority to discontinue service, including but not limited to authority for discontinuance of service pursuant to Part 63 of the Federal Communications Commission Rules (47 C.F.R. § 63.01, *et. seq.*) and Section 214 of the Communications Act of 1934, as amended (47 U.S.C. § 214).

Joe Jetensky, Manager
HunTel Communications
1605 Washington Street
Blair, NE 68008

ACCESS SERVICE

2. **General Regulations** (Cont'd)

2.3 Obligations of the Customer (Cont'd)

2.3.13 Discontinuance of Service by Interexchange Carriers – Procedures (Cont'd)

(B) Notwithstanding Section 2.3.12(B), above, an Interexchange Carrier may block or otherwise discontinue the carriage of terminating access traffic if, prior to discontinuance of service:

(1) the discontinuing Interexchange Carrier obtains a signed Letter of Authorization of Impairment of Service (LOAI) from each of the Telephone Company's local exchange service customers authorizing that Interexchange Carrier to discontinue delivery of interexchange traffic for termination to that local exchange service customer; and

(2) the discontinuing Interexchange Carrier obtains all necessary legal and regulatory authority to discontinue such service, including but not limited to authority pursuant to Part 63 of the Federal Communications Commission Rules (47 C.F.R. § 63.01, *et. seq.*) and Section 214 of the Communications Act of 1934, as amended (47 U.S.C. § 214).

(C) The LOAD and LOAI shall be in a form approved by the Telephone Company prior to use by the Interexchange Carrier. Such approval shall not unreasonably delayed or denied.

Joe Jetensky, Manager
HunTel Communications
1605 Washington Street
Blair, NE 68008

ACCESS SERVICE

2. **General Regulations** (Cont'd)

2.4 Payment Arrangements and Credit Allowance

2.4.1 Payment of Rates, Charges and Deposits

(A) The Telephone Company will require a deposit from all customers with a proven history of late payments to the Telephone Company and all customers who do not have established credit unless the customer is a successor of a company which has established credit and has no history of late payments to the Telephone Company. The deposit may be required prior to or after establishment of service. The total deposit may not exceed the estimated charges for service for a two-month period.

The fact that a deposit has been made does not relieve the customer from the responsibility of complying with the Telephone Company's regulations regarding prompt payment of bills. Annual interest at the rate described in Section 2.4.1(B)(3)(b), following, will be paid on all deposits held from the date the deposit is received up to and including the date the deposit is returned or credited to the customer's account. The deposit will be refunded after the customer has established a record of prompt payment for one year. When service is terminated, any deposit held will be credited on the final bill.

(B) The Telephone Company will bill all usage charges monthly in arrears. All non usage sensitive access services, including End User Access Service and Presubscription service will be billed monthly in advance. Nonrecurring charges will be billed in the month following the provision of service.

ACCESS SERVICE

2. **General Regulations** (Cont'd)

2.4 Payment Arrangements and Credit Allowance (Cont'd)

2.4.1 Payment of Rates, Charges and Deposits (Cont'd)

(B) (Cont'd)

(1) The bill day for End User Access Service and Presubscription Service will be the same day established for the provision of local service.

(2) The bill day(s) for all access services other than End User Access Service and Presubscription Service will be established by the Telephone Company for each customer account and shall appear on the carrier access bill. If the Telephone Company advises the customer in writing, an alternate billing schedule may be established. Alternate billing schedules shall not be established on less than 60 days notice or initiated by the Telephone Company more than twice in any consecutive 12-month period.

ACCESS SERVICE

2. **General Regulations** (Cont'd)

2.4 Payment Arrangements and Credit Allowance (Cont'd)

2.4.1 Payment of Rates, Charges and Deposits (Cont'd)

(B) (Cont'd)

(3)

(a) Payment for service is due 31 days after the bill day or by the next bill date (i.e., same date in the following month as the bill date), whichever is the shortest interval, except as provided herein, and are payable in immediately available funds. If the customer does not receive a bill at least 20 days prior to the 31 day payment due date, then the bill shall be considered delayed. When a bill has been delayed, upon request of the customer, the due date will be extended by the number of days the bill was delayed. Such request by customer must be accompanied by proof of the late bill receipt. If such payment date would cause payment to be due on a Saturday, Sunday or legal holiday (i.e., New Years, Independence Day, Labor Day, Thanksgiving, Christmas, Veteran's Day and the days when Washington's Birthday, Memorial Day, and Columbus Day are legally observed) payment for such bills will be due as follows:

ACCESS SERVICE

2. **General Regulations** (Cont'd)

2.4 Payment Arrangements and Credit Allowance (Cont'd)

2.4.1 Payment of Rates, Charges and Deposits (Cont'd)

(B) (Cont'd)

(3) (Cont'd)

(a) (Cont'd)

If such payment date falls on a Sunday or on a Holiday which is observed on a Monday, the payment date shall be the first non-Holiday day following such Sunday or Holiday. If such payment date falls on a Saturday or on a Holiday which is observed on Tuesday, Wednesday, Thursday or Friday, the payment date shall be the last non-Holiday day preceding such Saturday or Holiday.

(b) If any portion of the payment is not received in immediately available funds by the due date as determined in (a), above, a late payment charge calculated at 15% annual interest will apply. Interest will be compounded monthly.

The late payment charge will be calculated from the due date to and including the date that payment is actually received by the Telephone Company. Any penalty due will be included as a separate item on the next statement issued.

Joe Jetensky, Manager
HunTel Communications
1605 Washington Street
Blair, NE 68008

ACCESS SERVICE

2. **General Regulations** (Cont'd)

2.4 Payment Arrangements and Credit Allowance (Cont'd)

2.4.1 Payment of Rates, Charges and Deposits (Cont'd)

(B) (Cont'd)

(3) (Cont'd)

(c) The customer shall pay both any disputed amount and any undisputed amount by the payment due date regardless of any billing dispute. In the event of a billing dispute, the customer shall pay the Telephone Company in full both the disputed and non-disputed portions of the bill by the due date. If a billing dispute concerning charges billed to the customer by the Telephone Company is resolved in favor of the Telephone Company, any disputed payments withheld pending settlement of the dispute shall be subject to the late payment penalty beginning 10 days after the due date and the customer shall pay the Telephone Company's attorneys' fees and all other costs incurred as a result of any collective action. If the dispute is resolved in favor of the customer, no late payment penalty will apply to the disputed amount. In this case, if full payment was made by the due date, the Telephone Company will refund the disputed amount in question plus interest. The penalty interest period shall begin 10 days following the due date or on the date the disputed amount was actually paid, whichever is later. Interest will be calculated as described in (b), preceding.

Joe Jetensky, Manager
HunTel Communications
1605 Washington Street
Blair, NE 68008

ACCESS SERVICE

2. **General Regulations** (Cont'd)

2.4 Payment Arrangements and Credit Allowance (Cont'd)

2.4.1 Payment of Rates, Charges and Deposits (Cont'd)

(C) Reserved for Future Use

(D) For services provided on a monthly basis, the charge for the provision of a fractional month's service will be determined by dividing the number of days that service was provided by 30 and multiplying the result times the monthly rate. This calculation will be made subject to any minimum service periods required for specific services.

(E) When a rate, as set forth in this tariff, is shown to more than two decimal places, the charges will be determined using the rate shown. The resulting amount will then be rounded to the nearest penny (i.e., rounded to two decimal places).

Joe Jetensky, Manager
HunTel Communications
1605 Washington Street
Blair, NE 68008

ACCESS SERVICE

2. **General Regulations** (Cont'd)

2.4 Payment Arrangements and Credit Allowance (Cont'd)

2.4.2 Minimum Periods

(A) Unless a minimum service period is described for a specific tariff item, the minimum period for which services are provided and for which rates and charges are applicable is one month.

When a service is discontinued prior to the expiration of the minimum period, the total charges at the rate level in effect at the time service is discontinued will apply for the remainder of the minimum period. The Telephone Company will charge the full nonrecurring charge to the end of the minimum period.

When a service with a minimum period greater than one month is discontinued prior to the expiration of the minimum period, the applicable charge will be the lesser of (1) the Telephone Company's total non-recoverable costs less the net salvage value for the discontinued service or (2) the total monthly charges and nonrecurring charges, at the rate level in effect at the time service is discontinued, for the remainder of the minimum period.

ACCESS SERVICE

2. **General Regulations** (Cont'd)

2.4 Payment Arrangements and Credit Allowance (Cont'd)

2.4.3 Credit Allowance for Service Interruptions

(A) General

A service is interrupted when it becomes unusable to the customer because of a failure of facilities used to furnish service under this tariff or in the event that the protective controls applied by the Telephone Company result in the complete loss of service by the customer. An interruption period starts when an inoperative service is reported to the Telephone Company, and ends when the service is operative. An allowance for interruption will apply only when the interruption is not due to the negligence of the customer. The credit allowance for an interruption or for a series of interruptions shall not exceed the monthly rate for the service interrupted in any one monthly billing period.

(B) When a Credit Allowance Applies

In case of an interruption to any service, allowance for the period of interruption, if not due to the negligence of the customer, shall be as follows:

(1) For Switched Access Service usage rated elements, no credit shall be allowed for an interruption of less than 24 hours. The customer shall be credited for an interruption of 24 hours or more at the rate of 1/30 of the applicable monthly rates for each period of 24 hours or major fraction (12 hours and one minute) thereof that the interruption continues.

Joe Jetensky, Manager
HunTel Communications
1605 Washington Street
Blair, NE 68008

ACCESS SERVICE

2. **General Regulations** (Cont'd)

2.4 Payment Arrangements and Credit Allowance (Cont'd)

2.4.3 Credit Allowance for Service Interruptions (Cont'd)

(B) When a Credit Allowance Applies (Cont'd)

(2) For Special Access Services and for flat rated Switched Access elements, (i.e., Entrance Facility, Direct Trunked Transport, and Multiplexing), no credit shall be allowed for an interruption of less than 30 minutes. The customer shall be credited for an interruption of 30 minutes or more at the rate of 1/1440 of the monthly charges for the facility or service for each period of 30 minutes or major fraction (16 minutes or more) thereof that the interruption continues.

(a) For two-point service, the monthly charge subject to application of a credit shall be the total of all the monthly rate element charges associated with the service (i.e., a channel termination per customer premises, channel mileage and optional features and functions).

(b) If a portion of a service such as a portion of a multipoint special access facility can still be utilized during the service interruption, the credit allowance will only apply to the services which are inoperative (i.e., a channel termination per customer premises, channel mileage and optional features and functions).

Joe Jetensky, Manager
HunTel Communications
1605 Washington Street
Blair, NE 68008

ACCESS SERVICE

2. **General Regulations** (Cont'd)

2.4 Payment Arrangements and Credit Allowance (Cont'd)

2.4.3 Credit Allowance for Service Interruption (Cont'd)

(B) When a Credit Allowance Applies (Cont'd)

(2) (Cont'd)

(c) Multiplexed Services

For multiplexed services, the monthly charge subject to application of a credit shall be the total of all the monthly rate element charges associated with that portion of the service that is inoperative. When the facility which is multiplexed or the multiplexer itself is inoperative, the monthly charge shall be the total of all the monthly rate element charges associated with the service (i.e., the Channel Termination, Channel Mileage Facility and Termination, Entrance Facility, Direct Trunked Transport and Optional Features and Functions, including the multiplexer on the facility to the hub, and the channel terminations, channel mileages and optional features and functions on the individual services from the hub). When the service which rides a channel of the multiplexed facility is inoperative, the monthly charge shall be the total of all the monthly rate element charges associated with that portion of the service from the hub to a customer premises (i.e., Channel Termination, Channel Mileage Facility and Termination, Direct Trunked Transport, and Optional Features and Functions).

ACCESS SERVICE

2. **General Regulations** (Cont'd)

2.4 Payment Arrangements and Credit Allowance (Cont'd)

2.4.3 Credit Allowance for Service Interruption (Cont'd)

(B) When a Credit Allowance Applies (Cont'd)

(2) (Cont'd)

(d) Flat Rated Switched Access Service Rate Elements

For flat rated Switched Access Service rate elements, the monthly charge subject to application of a credit shall be the total of all the monthly rate element charges associated with the service (i.e., Entrance Facility, Direct Trunked Transport and Multiplexing).

ACCESS SERVICE

2. **General Regulations** (Cont'd)

2.4 Payment Arrangements and Credit Allowance (Cont'd)

2.4.3 Credit Allowance for Service Interruption (Cont'd)

(C) When a Credit Allowance Does Not Apply

No credit allowance will be made for:

(1) Interruptions caused by the negligence of the customer.

(2) Interruptions of a service due to the failure of equipment or systems provided by the customer or others.

(3) Interruptions of a service during any period in which the Telephone Company is not afforded access to the premises where the service is terminated.

(4) Interruptions of a service when the customer has released that service to the Telephone Company for maintenance purposes, to make rearrangements, or for the implementation of a change order during the time that was negotiated with the customer prior to the release of the service. Thereafter, a credit allowance as set forth in (B), preceding, applies.

ACCESS SERVICE

2. **General Regulations** (Cont'd)

2.4 Payment Arrangements and Credit Allowance (Cont'd)

2.4.3 Credit Allowance for Service Interruption (Cont'd)

(C) When a Credit Allowance Does Not Apply (Cont'd)

(5) Periods when the customer elects not to release the service for testing and/or repair and continues to use it on an impaired basis.

2.4.4 Re-establishment of Service Following Fire, Flood, or Other Occurrence

(A) Nonrecurring Charges Do Not Apply

Charges do not apply for the re-establishment of service for the same customer following an interruption resulting from a fire, flood or other occurrence attributed to an Act of God provided that:

(1) The service is of the same type as was provided prior to the interruption.

(2) The service is at the same location on the same premises.

(3) The re-establishment of service begins within 60 days after Telephone Company service is available.

ACCESS SERVICE

2. **General Regulations** (Cont'd)

2.4 Payment Arrangements and Credit Allowance (Cont'd)

2.4.4 Re-establishment of Service Following Fire, Flood, or Other Occurrence (Cont'd)

(B) Nonrecurring Charges Apply

Nonrecurring Charges apply for establishing service at a different location on the same premises or at a different Premises pending re-establishment of service at the original location.

2.4.5 Access Services Provided by More Than One Telephone Company

When more than one Telephone Company is involved in the provisions of Access Services, the Telephone Companies involved will mutually agree upon one of the billing methods described in (A) or (B), following, to bill for the transport or mileage portion of the service. The Telephone Company will select one of the four options listed after agreeing to implement that method with the interconnecting companies.

Joe Jetensky, Manager
HunTel Communications
1605 Washington Street
Blair, NE 68008

ACCESS SERVICE

2. **General Regulations** (Cont'd)

2.4 Payment Arrangements and Credit Allowance (Cont'd)

2.4.5 Access Services Provided by More Than One Telephone Company (Cont'd)

The Telephone Company will notify the customer which of the billing methods will be used. The customer will place the order for service as set forth in Section 5.9, following. The Telephone Company receiving the order or copy of the order from the customer will be responsible for billing the customer according to one of the FCC approved methods.

(A) Single Bill Options

(1) Single Bill/Multiple Tariff

Under this arrangement, the Telephone Company and the interconnecting carrier companies determine a billing entity (the Telephone Company, the interconnecting carrier or a third party). The billing entity will prepare a single access bill with each Telephone Company's charges separately identified. The customer then pays the billing entity for the access charges and the billing entity then pays each Telephone Company involved in the provision of the service. This method would require that the billing entity maintain in its billing system the applicable tariff rates and charges for all Telephone Companies involved with the access service.

ACCESS SERVICE

2. **General Regulations** (Cont'd)

2.4 Payment Arrangements and Credit Allowance (Cont'd)

2.4.5 Access Services Provided by More Than One Telephone Company (Cont'd)

(A) Single Bill Options (Cont'd)

(2) Single Bill/Pass-Through Billing

Under this arrangement, a predetermined billing company would assemble a single access bill for the entire service provided. Each Telephone Company involved in the provision of the access service prepares an access bill (based on its own tariff) for its portion of the access service and forwards the bill to the billing company. The billing company would combine the various Telephone Company's bills into one access bill to be rendered to the customer.

(3) Single Bill/Single Tariff (LEC-to-LEC Access Billing)

Under this arrangement, the end office Telephone Company is responsible for billing the customer. Included in the Telephone Company's access rate structure would be the cost-based tariff charges of the other Telephone Companies involved in the provision of the access service. The Telephone Company bills the customer for the entire access service and is billed by the other Telephone Companies for the portion of access service they provide.

Joe Jetensky, Manager
HunTel Communications
1605 Washington Street
Blair, NE 68008

ACCESS SERVICE

2. **General Regulations** (Cont'd)

2.4 Payment Arrangements and Credit Allowance (Cont'd)

2.4.5 Access Services Provided by More Than One Telephone Company (Cont'd)

(B) Multiple Bill Options

(1) Multiple Company/Multiple Tariff Billing

Under the arrangement, each Telephone Company providing service will bill the customer according to its tariff. Additionally, these access bills must use the same access minutes of use and include cross-references to the other Telephone Company's bills, and common circuit identification.

(a) For Non-Distance Sensitive Rate Elements:

Local Transport rate elements with the exception of the Tandem Switched Facility and Direct Trunked Facility elements are nondistance sensitive. The Local Transport rates described in Section 12.2(B), following, for these elements will apply to the total number of access minutes, terminations, or arrangements as appropriate. The rates charged for the portion of Local Transport provided by a connecting exchange Telephone Company will be based on the connecting exchange Telephone Company’s access tariff and may be distance sensitive for all rate options.

ACCESS SERVICE

2. **General Regulations** (Cont'd)

2.4 Payment Arrangements and Credit Allowance (Cont'd)

2.4.5 Access Services Provided by More Than One Telephone Company (Cont'd)

(B) Multiple Bill Options (Cont'd)

(1) Multiple Company/Multiple Tariff Billing (Cont'd)

(b) For Distance Sensitive Rate Elements:

The Tandem Switched Facility rate and the Direct Trunked Facility rate in Local Transport and the Channel Mileage Facility rate in Special Access provided by the Telephone Company are distance sensitive. The Tandem Switched Facility rate and the Direct Trunked Facility rate described in Section 12.2(B)(4)(a), following, and the Channel Mileage Facility Rate described in Section 12.3(B)(2), following, will apply to the total number of miles determined using the following method.

(i) Determine the appropriate mileage by computing the number of airline miles between the Telephone Company serving wire centers using the V&H method set forth in Section 7.4.3, following.

Joe Jetensky, Manager
HunTel Communications
1605 Washington Street
Blair, NE 68008

ACCESS SERVICE

2. **General Regulations** (Cont'd)

2.4 Payment Arrangements and Credit Allowance (Cont'd)

2.4.5 Access Services Provided by More Than One Telephone Company (Cont'd)

(B) Multiple Bill Options (Cont'd)

(1) Multiple Bill/Multiple Tariff Billing (Cont'd)

(b) For Distance Sensitive Rate Elements: (Cont'd)

(ii) Determine the billing percentage (BP), as set forth in the NATIONAL EXCHANGE CARRIER ASSOCIATION, INC. TARIFF F.C.C. No. 4, which represents the portion of the service provided by each Telephone Company.

(iii) Multiply the number of airline miles, as set forth in (i), preceding, times the BP for each Telephone Company, as set forth in (ii), preceding, times the Tandem Switched Facility, the Direct Trunked Facility or the Channel Mileage Facility rate as appropriate.

Joe Jetensky, Manager
HunTel Communications
1605 Washington Street
Blair, NE 68008

ACCESS SERVICE

2. **General Regulations** (Cont'd)

2.4 Payment Arrangements and Credit Allowance (Cont'd)

2.4.5 Access Services Provided by More Than One Telephone Company (Cont'd)

(B) Multiple Bill Options (Cont'd)

(1) Multiple Bill/Multiple Tariff Billing (Cont'd)

(b) For Distance Sensitive Rate Elements: (Cont'd)

(iv) When three or more Telephone Companies are involved in providing an Access Service, the intermediate Telephone Company(s) will determine the appropriate charges as set forth in (iii), preceding.

(C) Determination of Rates and Charges

Determine the billing percentage (BP), as set forth in NATIONAL EXCHANGE CARRIER ASSOCIATION, INC. TARIFF F.C.C. No. 4, which represents the portion of the service provided by each Telephone Company. The following applies to all Feature Groups.

When three or more Telephone Companies are involved in providing an Access Service, the intermediate Telephone Company(s) will determine the appropriate charges as set forth below. Additionally, when a segment of the Tandem Switched Facility, the Direct Trunked Facility or Channel Mileage Facility is measured to the intermediate office(s), the Tandem Switched Facility, the Direct Trunked Termination or Channel Mileage Termination rates are also applied at the intermediate Telephone Company(s) office(s).

Joe Jetensky, Manager
HunTel Communications
1605 Washington Street
Blair, NE 68008

ACCESS SERVICE

2. **General Regulations** (Cont'd)

2.4 Payment Arrangements and Credit Allowance (Cont'd)

2.4.5 Access Services Provided by More Than One Telephone Company (Cont'd)

(C) Determination of Rates and Charges (Cont'd)

(1) Entrance Facility Charge and/or Multiplexing Charges

When the Entrance Facility and/or Multiplexing equipment is located within the operating territory of the Telephone Company, the Entrance Facility and/or Multiplexing charge will apply.

(2) Tandem Switched Transport

The Tandem Transport rate will apply for all originating and terminating access minutes routed over the facility.

When a tandem office is located within the operating territory of the Telephone Company, the Tandem Switching rate will apply to all originating and terminating access minutes that are switched at the tandem.

The Tandem Switched Transport rates are applied as set forth in Section 6.2(A)(3), following. The Switched Access Nonrecurring Charges are applied as set forth in Section 6.7.1(A), following.

Joe Jetensky, Manager
HunTel Communications
1605 Washington Street
Blair, NE 68008

ACCESS SERVICE

2. **General Regulations** (Cont'd)

2.4 Payment Arrangements and Credit Allowance (Cont'd)

2.4.5 Access Services Provided by More Than One Telephone Company (Cont'd)

(C) Determination of Rates and Charges (Cont'd)

(3) Direct Trunked Termination

The Direct Trunked Termination Rate is applied at each termination located in an office within the operating area of the Telephone Company. If a segment of Direct Transport Facility is measured to the intermediate office(s), the Direct Trunked Termination is applied at the intermediate office(s).

(4) Direct Trunked Facility

The Direct Trunked Facility rate is applied as set forth in Section 2.4.5(B)(1)(b), preceding.

For Special Access, the Channel Mileage Facility rate is applied as set forth in Section 2.4.5(B)(1)(b), preceding.

(5) Special Access

The Special Access Channel Mileage Termination rate and nonrecurring charges are applied as set forth in Sections 7.1.1(B)(2) and 7.1.1(A), following, at each location in an office within the operating area of the Telephone Company. (Note: The BP is not applied to either the Channel Mileage Termination Recurring Rate or any Nonrecurring Charge.)

Joe Jetensky, Manager
HunTel Communications
1605 Washington Street
Blair, NE 68008

ACCESS SERVICE

2. **General Regulations** (Cont'd)

2.5 Connections

2.5.1 General

Customer Premises Equipment and Systems may be connected with Switched and Special Access Service furnished by the Telephone Company where such connection is made in accordance with the provisions specified in Technical Reference Publication AS No. 1 and in Section 2.1, preceding.

2.6 Definitions

Access Codes

The term "Access Code" denotes a uniform code assigned by the Telephone Company to an individual customer in the form of 101XXXX and 950-XXXX.

Access Order

An order to provide the customer with Switched Access Service or Special Access Service or changes to existing services.

Access Minute

The unit of usage of exchange facilities in interstate or foreign service for the purpose of calculating chargeable usage. On the originating end of an interstate or foreign call, usage is measured from the time the originating end user's call is delivered by the Telephone Company to, and acknowledged as received by, the customer's facilities connected with the originating exchange. On the terminating end of an interstate or foreign call, usage is measured from the time the call is received by the end user in the terminating exchange. Timing of usage at both originating and terminating ends of an interstate or foreign call shall terminate when the calling or called party disconnects, whichever event is recognized first in the originating and terminating end exchanges, as applicable.

ACCESS SERVICE

2. **General Regulations** (Cont'd)

2.6 Definitions (Cont'd)

Access Tandem

A Telephone Company or centralized equal access provider switching system that provides a concentration and distribution function for originating or terminating traffic between end offices and a customer premises.

Aggregator

The term "Aggregator" denotes any entity that, in the ordinary course of its operations, makes telephones available to the public or to transient users of its premises, for interstate telephone calls using a provider of operator services.

Answer/Disconnect Supervision

The transmission of the switch trunk equipment supervisory signal (off-hook or on-hook) to the customer's point of termination as an indication that the called party has answered or disconnected.

Automatic Number Identification (ANI) (N)

The term "Automatic Number Identification" denotes the Multi-Frequency (MF) signaling parameter that identifies the billing number of the calling party. (N)

Balance (100 Type) Test Line

An arrangement in an end office which provides for balance and noise testing.

Business Day

The times of day that a company is open for business. Business Day hours for the Telephone Company may be determined by contacting the business office.

Busy Hour Minutes of Capacity (BHMC)

The customer specified maximum amount of Switched Access Service access minutes the customer expects to be handled in an end office switch during any hour in an 8:00 A.M. to 11:00 P.M. period for the Switched Access Service ordered. This customer furnished BHMC quantity is the input data the Telephone Company uses to determine the number of transmission paths for the Switched Access Service ordered.

ACCESS SERVICE

2. **General Regulations** (Cont'd)

2.6 Definitions (Cont'd)

Call

A customer attempt for which the complete address code (e.g., 0-, 911, or 10 digits) is provided to the serving dial tone office.

Calling Party Number (CPN) (N)

The term "Calling Party Number" denotes the SS7 signaling parameter that identifies the subscriber line number or directory number of the calling party. (N)

Carrier or Common Carrier

See Interexchange Carrier.

CCS

A standard unit of traffic load that is equal to 100 seconds of usage or capacity of a group of servers (e.g., trunks). Also known as "100 call seconds".

Central Office

A local Telephone Company switching system where Telephone Exchange Service customer station loops are terminated for purposes of interconnection to each other and to trunks.

Channels

A communications path between two or more points of termination.

Charge Number (CN) (N)

The term "Charge Number" denotes the SS7 signaling parameter that identifies the billing telephone number of the calling party. (N)

ACCESS SERVICE

2. **General Regulations** (Cont'd)

2.6 Definitions (Cont'd)

Common Channel Signaling (CCS)

The term "Common Channel Signaling" (CCS) denotes a high-speed packet switched communications network which is separate (out of band) from the public packet switched and message networks. Its purpose is to carry addressed signaling messages for individual trunk circuits and/or database related services between Signaling Points in the CCS network.

Common Channel Signaling Access Capability (CCSAC)

The term "Common Channel Signaling Access Capability" denotes the connection between the customer's point of presence and the Signal Transfer Point (STP) designated by the Telephone Company for the transport of signaling information.

Common Line

A line, trunk, pay telephone line or other facility provided under the general and/or local exchange service tariffs of the Telephone Company, terminated on a central office switch. A common line-residence is a line or trunk provided under the residence regulations of the local exchange service tariffs. A common line-business is a line provided under the business regulations of the general and/or local exchange service tariffs.

Communications System

Channels and other facilities which are capable of communications between terminal equipment provided by other than the Telephone Company.

ACCESS SERVICE

2. **General Regulations** (Cont'd)

2.6 Definitions (Cont'd)

Conventional Signaling

The inter-machine signaling system which has been traditionally used in North America for the purpose of transmitting the called number's address digits from the originating end office to the switching machine that will terminate the call. In this system, all of the dialed digits are received by the originating switching machine, a path is selected, and the sequence of supervisory signals and outpulsed digits is initialized. No overlap outpulsing, ten-digit ANI, ANI information digits, or acknowledgement wink are included in this signaling sequence.

Customer Premises

The premises of the customer to which Access Service is provided.

Customer(s)

Any individual, partnership, association, joint-stock company, trust, corporation, or governmental entity or other entity which subscribes to the services offered under this tariff, including but not limited to End Users, Interexchange Carriers (ICs) and other telecommunications carriers or providers originating or terminating Toll VoIP-PSTN Traffic. (C) | (C)

Data Transmission (107 Type) Test Line

An arrangement which provides for a connection to a signal source which provides test signals for one-way testing of data and voice transmission parameters.

Detail Billing

The listing of each message and/or rate element for which charges to a customer are due on a bill prepared by the Telephone Company.

ACCESS SERVICE

2. **General Regulations** (Cont'd)

2.6 Definitions (Cont'd)

Direct-Trunked Transport

The term "Direct-Trunked Transport" denotes transport from the serving wire center to the end office or from the serving wire center to the access tandem on circuits dedicated to the use of a single customer.

Effective 2-Wire

A condition which permits the simultaneous transmission in both directions over a channel, which does not insure independent information transmission in both directions. Effective 2-wire channels may be terminated with 2-wire or 4-wire interfaces.

Effective 4-Wire

A condition which permits the simultaneous independent transmission of information in both directions over a channel. The method of implementing effective 4-wire transmission is at the discretion of the Telephone Company (physical, time domain, and frequency-domain separation or echo cancellation techniques).

End Office Switch

A local Telephone Company switching system where Telephone Exchange Service customer common lines are terminated for purposes of interconnection to trunks. Included are Remote Switching Modules and Remote Switching Systems served by a host office in a different wire center.

ACCESS SERVICE

2. **General Regulations** (Cont'd)

2.6 Definitions (Cont'd)

End User

Any customer of an interstate or foreign telecommunications service that is not a carrier, except that a carrier shall be deemed to be an "end user" to the extent that such carrier uses a telecommunications service for administrative purposes, without making such service available to others, directly or indirectly.

Entrance Facility

The term "Entrance Facility" denotes a Switched Access Service dedicated Local Transport facility between the customer's serving wire center and the customer's premises.

Entry Switch

See First Point of Switching.

Exchange

A unit generally smaller than a local access and transport area, established by the Telephone Company for the administration of communications service in a specified area which usually embraces a city, town or village and its environs. It consists of one or more central offices together with the associated facilities used in furnishing communications service within that area. The exchange includes any Extended Area Service Area that is an enlargement of a Telephone Company's exchange area to include nearby exchanges.

ACCESS SERVICE

2. **General Regulations** (Cont'd)

2.6 Definitions (Cont'd)

Exit Message

The term "Exit Message" denotes an SS7 message sent to an end office by the Telephone Company's tandem switch to mark the Carrier Connect Time when the Telephone Company's tandem switch sends an Initial Address Message to an interexchange customer.

First Point of Switching

The first Telephone Company or centralized equal access provider location at which switching occurs on the terminating path of a call proceeding from the customer premises to the terminating end office and, at the same time, the last Telephone Company or centralized equal access provider location at which switching occurs on the originating path of a call proceeding from the originating end office to the IC or customer premises.

Host Office

An electronic switching system, which provides call processing capabilities for one or more Remote Switching Modules or Remote Switching Systems.

Immediately Available Funds

A corporate or personal check drawn on a bank account for which funds are available for use by the receiving party on the same day on which they are received and include U.S. Federal Reserve bank wire transfers, U.S. Federal Reserve notes (paper cash), U.S. coins, U.S. Postal Money Orders and New York Certificates of Deposit.

ACCESS SERVICE

2. **General Regulations** (Cont'd)

2.6 Definitions (Cont'd)

Individual Case Basis

A condition in which the regulations, if applicable, rates and charges for an offering under the provisions of this tariff are developed based on the circumstances in each case.

Initial Address Message

The term "Initial Address Message" denotes an SS7 message sent in the forward direction to initiate trunk set up, reserve an outgoing trunk and process the information about that trunk along with other data relating to the routing and handling of the call to the next switch.

Interconnection Point

The V and H coordinate as determined in the NATIONAL EXCHANGE CARRIER ASSOCIATION, INC. TARIFF F.C.C. No. 4 of a point where facilities of the Telephone Company meet facilities of a connecting exchange telephone company.

Interexchange Carrier (IC) or Interexchange Common Carrier

Any individual, partnership, association, joint-stock company, trust, governmental entity or corporation engaged for hire in interstate or foreign communication by wire or radio, between two or more exchanges.

Internet Protocol (IP) Signaling (N)

The term “Internet Protocol (IP) Signaling” denotes a packet data-oriented protocol used for communicating call signaling information. (N)

Interstate Communications

A term which denotes both interstate and foreign communications.

ACCESS SERVICE

2. **General Regulations** (Cont'd)

2.6 Definitions (Cont'd)

Intrastate Communications

Any communications within a state subject to oversight by the state regulatory commission.

Line Side Connection

A connection of a transmission path to the line side of a local exchange switching system.

Local Access and Transport Area

A geographic area established for the provision and administration of communications service. It encompasses one or more designated exchanges, which are grouped to serve common social, economic and other purposes.

Loop Around Test Line

An arrangement utilizing a Telephone Company central office to provide a means to make certain two-way transmission tests on a manual basis. This arrangement has two central office terminations, each reached by means of separate telephone numbers and does not require any specific customer premises equipment. Equipment subject to this test arrangement is at the discretion of the customer.

Message

See "Call".

ACCESS SERVICE

2. **General Regulations** (Cont'd)

2.6 Definitions (Cont'd)

Milliwatt (102 Type) Test Line

An arrangement in an end office which provides a 1,004 Hz tone at 0 dBm0 for one-way transmission measurements towards the customer's premises from the Telephone Company end office.

Multi-Frequency (MF) Signaling (N)

The term "Multi-Frequency (MF) Signaling" denotes an in-band signaling method in which call signaling information is transmitted between network switches using the same voiceband channel used for voice. (N)

Net Salvage

The estimated scrap, sale, or trade-in value, less the estimated cost of removal. Cost of removal includes the costs of demolishing, or otherwise disposing of the material and any other applicable costs. Since the cost of removal may exceed salvage value, net salvage may be negative.

Network Control Signaling

The transmission of signals used in the telecommunications system which perform functions such as supervision (control, status, and charge signals), address signaling (e.g., dialing), calling and called number identifications, rate of flow, service selection error control and audible tone signals (call progress signals indicating re-order or busy conditions, alerting, coin denomination, coin collect and coin return tones) to control the operation of the telecommunications system.

Nonsynchronous Test Line

An arrangement in step-by-step end offices which provides operational tests which are not as complete as those provided by the synchronous test lines, but can be made more rapidly.

ACCESS SERVICE

2. **General Regulations** (Cont'd)

2.6 Definitions (Cont'd)

North American Numbering Plan

A three-digit area (Numbering Plan Area) code and a seven-digit telephone number made up of a three-digit Central Office code plus a four-digit station number.

Off-Hook

The active condition of Switched Access or a Telephone Exchange Service line.

On-Hook

The idle condition of Switched Access or a Telephone Exchange Service line.

Open Circuit Test Line

An arrangement in an end office which provides an ac open circuit termination of a trunk or line by means of an inductor of several Henries.

Originating Direction

The term “Originating Direction” denotes the use of Access Service for the origination of calls from an End User Premises to a Customer’s Premises. (T) (C)

Overlap Outpulsing

The feature of the exchange access signaling system which permits initiation of pulsing to the customer's premises before the calling subscriber has completed dialing an originating call.

ACCESS SERVICE

2. **General Regulations** (Cont'd)

2.6 Definitions (Cont'd)

Pay Telephone

Denotes a coin or coinless instrument provided in a public or semipublic place where Payphone Service Provider customers can originate telephonic communications and pay the applicable charges by (1) inserting coins into the equipment, or (2) using a credit card, or (3) third party billing the call or (4) calling collect.

Payphone Service Provider

An entity that provides pay telephone service, which is the provision of public, semi-public or inmate pay telephone service.

Point of Termination

The point of demarcation within a customer premises at which the Telephone Company's responsibility for the provision of Access Service ends.

Premises

A building or buildings on continuous property (except Railroad Right-of-Way, etc.) not separated by a public highway.

Primary Exchange Carrier

Denotes the Local Exchange Telephone Company in whose exchange is a customer's first point of switching (i.e., dial tone office for FGA).

Release Message

The term "Release Message" denotes an SS7 Message sent in either direction to indicate that a specific circuit is being released.

ACCESS SERVICE

2. **General Regulations** (Cont'd)

2.6 Definitions (Cont'd)

Remote Switching Modules and/or Remote Switching Systems

Small remotely controlled electronic end office switches which obtain their call processing capability from an ESS-type Host Office. The Remote Switching Modules and/or Remote Switching Systems cannot accommodate direct trunks. (C)

Registered Equipment

The customer's premises equipment that complies with and has been approved within the Registration Provisions of Part 68 of the F.C.C.'s Rules and Regulations.

Service Access Code

The term “Service Access Code” denotes a 3-digit code in the NPA format which is used as the first three digits of a 10-digit address and which is assigned for special network uses. Whereas NPA codes are normally used for identifying specific geographical areas, certain Service Access Codes have been allocated in the North American Numbering Plan to identify generic services or to provide access capability. Examples of Service Access Codes include the 800 and 900 codes.

Service Switching Point (SSP)

A Service Switching Point denotes an end office or tandem which, in addition to having SS7 and SP capabilities, is also equipped to query centralized data bases.

Serving Wire Center

The wire center from which the customer premises would normally obtain dial tone from the Telephone Company.

ACCESS SERVICE

2. **General Regulations** (Cont'd)

2.6 Definitions (Cont'd)

Shortage of Facilities or Equipment

A condition which occurs when the Telephone Company does not have appropriate cable, switching capacity, bridging or, multiplexing equipment, etc., necessary to provide the Access Service requested by the customer.

Short Circuit Test Line

An arrangement in an end office that provides for an ac short circuit termination of a trunk or line by means of a capacitor of at least four microfarads.

Signaling Point (SP)

The term "Signaling Point" (SP) denotes an SS7 network interface element capable of originating and terminating SS7 trunk signaling messages.

Signaling Point Of Interface (SPOI)

The term "Signaling Point of Interface" (SPOI) denotes the interface point between the Telephone Company and its Access customers for purposes of exchanging SS7 Signaling messages for CCS services.

Signaling System Seven (SS7)

The term "Signaling System Seven" (SS7) denotes the layered protocol used for standardized Common Channel Signaling in the United States.

ACCESS SERVICE

2. **General Regulations** (Cont'd)

2.6 Definitions (Cont'd)

Signaling Transfer Point (STP)

The term "Signaling Transfer Point" (STP) denotes a packet switch providing CCS Network Access that performs CCS message routing and screening.

Subtending End Office of an Access Tandem

An end office that has final trunk group routing through that tandem.

Synchronous Test Line

An arrangement in an end office which performs marginal operational tests of supervisory and ring tripping functions.

Tandem Switched Transport

The term "Tandem Switched Transport" denotes transport from the serving wire center to the end office, or from the tandem to the end office, that is switched at a tandem. It also denotes transport from a host office to a remote switching office.

ACCESS SERVICE

2. **General Regulations** (Cont'd)

2.6 Definitions (Cont'd)

Terminating Direction

The use of Access Service for the completion of calls from a Customer's premises to an End User Premises. (C)

Termination Liability

The amount which will be billed if services using specially constructed facilities are terminated prior to the expiration of the Termination Liability Period.

Toll Free Number Database

The term "Toll Free Number (TFN) Database" refers to the use of database technology to determine to which access customer an originating TFN call is to be delivered. An originating TFN call is a call made with the prefix 1+800, 1+888, 1+866, 1+855, 1+844, 1+833 or 1+822. These calls may also be referred to as 8XX calls. The TFN Database routes calls to an access customer based on the dialed ten-digit TFN number. Initially, the Toll Free Number Database will provide routing information for calls utilizing 800 and 888 toll free numbers. The Toll Free Number Database will be expanded, as required, to include routing for 877, 855, 844, 833 and 822 toll free numbers.

Toll VoIP-PSTN Traffic (N)

The term "Toll VoIP-PSTN Traffic" denotes a customer's interexchange voice traffic exchanged with the Telephone Company in Time Division Multiplexing format over PSTN facilities, which originates and/or terminates in Internet Protocol (IP) format. "Toll VoIP-PSTN Traffic" originates and/or terminates in IP format when it originates from and/or terminates to an end user customer of a service that requires IP-compatible customer premises equipment. (N)

ACCESS SERVICE

2. **General Regulations** (Cont'd)

2.6 Definitions (Cont'd)

Transmission Measuring (105 Type) Test Line (M)

An arrangement in an end office which provides far-end access to a recorder and permits two-way loss and noise measurements to be made on trunks from a near end office.

Transmission Path

An electrical path capable of transmitting signals within the range of the service offering, e.g., a voice grade transmission path is capable of transmitting voice frequencies within the approximate range of 300 to 3,000 Hz. A transmission path is comprised of physical or derived facilities consisting of any form or configuration of plant typically used in the telecommunications industry. (M)

Trunk

A communications path connecting two switching systems in a network used in the establishment of an end-to-end connection.

Trunk Group

A set of trunks which are traffic engineered as a unit for the establishment of connections between switching systems in which all of the communications paths are interchangeable.

Trunk Side Connection

The connection of a transmission path to the trunk side of a local exchange switching system. This type of connection is used when providing FGB or FGD Switched Access Service.

ACCESS SERVICE

2. **General Regulations** (Cont'd)

2.6 Definitions (Cont'd)

Two-Wire to Four-Wire Conversion

An arrangement which converts a four-wire transmission path to a two-wire transmission path to allow a four-wire facility to terminate in a two-wire entity (e.g., a central office switch).

V and H Coordinates Method

A method of computing airline miles between two points by utilizing an established formula which is based on the vertical and horizontal coordinates of the two points.

WATS Serving Office

The term "WATS Serving Office" denotes a Telephone Company designated serving wire center where switching, screening and/or recording functions are performed in connection with the closed-end of WATS or WATS-type services.

Wire Center

A building in which one or more central offices, used for the provision of Telephone Exchange Services, are located.

ACCESS SERVICE

3. [RESERVED FOR FUTURE USE]

ACCESS SERVICE

4. **End User Access Service**

4.1 General Description

The Telephone Company will provide End User Access Service to end users who obtain local exchange service from the Telephone Company under its local exchange tariffs.

End User Access provides for the use of an End User Common Line (EUCL) service by an end user.

4.2 Limitations

(A) A telephone number is not provided with End User Access.

(B) Detail billing is not provided with End User Access.

(C) Directory listings are not included with End User Access.

(D) Intercept arrangements are not included with End User Access.

4.3 Undertaking of the Telephone Company

(A) The Telephone Company will provide the use of an EUCL for access to interstate access services when the End User obtains local telephone exchange service.

(B) The Telephone Company will be responsible for contacts and arrangements with end users for the billing of End User Access charges.

Joe Jetensky, Manager
HunTel Communications
1605 Washington Street
Blair, NE 68008

ACCESS SERVICE

4. **End User Access Service** (Cont'd)

4.4 Payment Arrangements and Credit Allowance

(A) Minimum Period

The minimum period for which EUCL End User Access is provided and for which charges are applicable is the same as the service with which it is associated.

(1) Those EUCLs associated with a local exchange telephone service will have the same minimum period as described in the exchange tariff for the associated service.

(B) Cancellation of Application

End User Access is cancelled when the order for the associated service is cancelled. No cancellation charges apply.

(C) Changes to Orders

When changes are made to orders for the local exchange service associated with End User Access, any necessary changes will also be made for End User Access. No charges will apply.

(D) Allowance for Interruptions

When End User Access Service is interrupted, the credit allowance for interruptions as set forth in Section 2.4.3, preceding, applies.

(E) Temporary Suspension of Service

When an end user temporarily suspends its local exchange service that is associated with EUCL, one-half of the EUCL per month charge will be temporarily suspended for the time period the local exchange service is suspended.

Joe Jetensky, Manager
HunTel Communications
1605 Washington Street
Blair, NE 68008

ACCESS SERVICE

4. **End User Access Service** (Cont'd)

4.5 Rate Regulations

(A) End User Access charges will be billed to the end user of the associated local telephone exchange service.

(B) The EUCL Business - Multiline rate applies on a per line basis only to multiline business subscribers. Multiline business subscribers include those end users that are provided more than one local exchange business service including semipublic service by the Telephone Company. The EUCL-Multiline Business rate will be assessed when a Payphone Service Provider obtains an exchange service line for the purposes of offering pay telephone service. Rates for EUCL Business-Multiline are set forth in Section 12.1.2(A), following.

(C) The EUCL charges for an individual line or trunk shown in both Section 12.1.2(A) and Section 12.1.2(B), following, apply to each residence, single line business or single line semipublic service provided to end users receiving service pursuant to the local exchange tariff.

(D) For business Centrex CO service lines or trunks, the End User Common Line (EUCL) - Centrex CO rate as set forth in Section 12.1.2(A), following, applies to each line or trunk.

Centrex CO or CO-like service provided to a college, university or school may serve both the college, university or school offices and the student or faculty dormitory (residential) quarters. When provided to residential quarters, the residential portion of the service is commonly known as dormitory service. Residential charges will apply to lines to the student or faculty dormitory (residential) quarters as set forth in Section 12.1.2 (B) following. Business charges for lines to the university, college or school offices will apply as set forth in Section 12.1.2. (A) following. Charges shall be based on the number of residence and business lines reported to the Telephone Company by the end user.

Joe Jetensky, Manager
HunTel Communications
1605 Washington Street
Blair, NE 68008

ACCESS SERVICE

4. **End User Access Service** (Cont'd)

4.5 Rate Regulations (Cont'd)

(E) Reserved for future use.

Joe Jetensky, Manager
HunTel Communications
1605 Washington Street
Blair, NE 68008

ACCESS SERVICE

5. Access Ordering

5.1 General

This section sets forth the order-related regulations and charges for services set forth in other sections of this tariff. These regulations and charges are in addition to other applicable regulations and charges as set forth in other sections of this tariff.

5.1.1 Ordering Conditions

A customer may order any number of services of the same type and between the same premises on a single Access Order. The use of any service provided by the Telephone Company shall constitute an order for service and the user of the service is obligated to pay the Telephone Company for that service in accordance with the provisions of this tariff.

The ordering customer must provide a copy of the access order to the Telephone Company. The customer shall provide all information necessary for the Telephone Company to provide and bill for the requested service. In addition to the order information required in Section 5.2, following, the customer must also provide:

- Customer name and premises address(es).
- Billing name and address (when different from customer name and address).
- Customer contact name(s) and telephone number(s) for the following provisioning activities:
    1. order negotiation
    2. order confirmation
    3. interactive design
    4. installation
    5. billing

Orders for Feature Group A Switched Access Service shall be in lines.

Orders for Feature Group B Switched Access Service shall be in trunks.

Joe Jetensky, Manager
HunTel Communications
1605 Washington Street
Blair, NE 68008

ACCESS SERVICE

5. **Access Ordering** (Cont'd)

5.1 General (Cont'd)

5.1.2 Provision of Other Services

Other services as described in Sections 9.1 and 9.2, following, may be ordered in conjunction with the order for Access Service. All rates and charges set forth in Sections 12.5(A) and (B), following, will apply in addition to the rates and charges for the Access Service with which they are associated.

International blocking service is provided to end users and Feature Group A customers as described in Section 9.3.5, following. The nonrecurring charge set forth in Section 12.5(F), following, is applicable as described in Section 9.3.5, following.

5.2 Access Order

An Access Order is used by the Telephone Company to provide a customer Access Service as follows:

- Switched Access Service as set forth in Section 6., following.
- Special Access Service as set forth in Section 7., following.
- Other Services as set forth in Section 9., following.

An Access Order Charge, as set forth in Section 12.5(J) following, is applied to all customer requests for new access service. The charge is also applicable to customer requests for additions, changes or rearrangements to existing access service, except in certain cases, such as for a service date or design change.

When ordering Switched Access service, the customer must specify the directionality of the service and whether the service is to be provided as (1) Direct Trunked Transport to the end office, (2) Direct Trunked Transport to a tandem which connects with Tandem Switched Transport from the tandem to the end office, or (3) Tandem Switched Transport to the end office. When all or a portion of service is ordered as Direct Trunked Transport, the customer must specify the type and quantity of Direct Trunked Transport facility (e.g., Voice Grade or High Capacity DS1).

Joe Jetensky, Manager
HunTel Communications
1605 Washington Street
Blair, NE 68008

ACCESS SERVICE

5. **Access Ordering** (Cont'd)

5.2 Access Order (Cont'd)

The customer must also specify the type of Entrance Facility (e.g., Voice Grade or High Capacity) to be used for Switched Access. High Capacity Facilities are available only in certain end offices where technologically feasible. For High Capacity Entrance Facilities, the customer must specify the facility assignment and the channel assignment for each trunk.

When ordering Switched Access Service to be combined with High Capacity Special Access Service, the customer must specify the facility assignment and the channel assignment.

Direct Trunked Transport is available at all tandems and at all end offices except those identified in NATIONAL EXCHANGE CARRIER ASSOCIATION, INC. TARIFF F.C.C. No. 4. as not having the capability to provide Direct Trunked Transport. Direct Trunked Transport is not available: (1) from end offices that provide equal access through a Centralized Equal Access arrangement, (2) from end offices that lack recording or measurement capability, and (3) from Non-Service Switching Point (SSP) equipped end offices that can not accommodate direct trunking of originating 800 calls.

A customer's Local Transport may be connected to the Entrance Facility of another customer, providing the other customer submits a Letter of Authorization for this connection and assumes full responsibility for the cost of the Entrance Facility.

When the customer has both Tandem Switched Transport and Direct Trunked Transport at the same end office, the customer will be provided Alternate Traffic Routing as set forth in Section 6.3.5(A)(1)(i), following.

(A) Feature Group A Switched Access Service

Orders for Feature Group A Switched Access Service shall be in lines.

Joe Jetensky, Manager
HunTel Communications
1605 Washington Street
Blair, NE 68008

ACCESS SERVICE

5. **Access Ordering** (Cont'd)

5.2 Access Order (Cont'd)

(A) Feature Group A Switched Access Service (Cont'd)

When placing an order for Access Service, the customer shall provide, at a minimum, the following information:

(1) The number of lines and the first point of switching (i.e., dial tone office).
(2) The customer shall specify whether the off-hook supervisory signaling is provided by the customer's equipment before the called party answers, or is forwarded by the customer's equipment when the called party answers.
(3) The customer shall specify which lines are to be arranged in multiline hunt group arrangements and which are to be provided as single lines.
(4) A projected Percentage of Interstate Use (PIU) as specified in Section 2.3.9, preceding.
(5) The Interexchange Carrier to which the service will be connected or, in the alternative, specify the means by which the FGA access communications are transported to another state.

(B) Feature Group B Switched Access Service

Orders for Feature Group B Switched Access Service shall be in trunks. The customer shall provide, at a minimum, the following information for Feature Group B orders:

(1) The number of trunks.
(2) The end office when direct routing to the end office is desired, except when FGB is provided through a Centralized Equal Access arrangement.
(3) The access tandem switch when routing is desired via an access tandem switch.
(4) The trunks that are to be arranged in trunk group arrangements or provided as single trunks for terminating only access minutes.

ACCESS SERVICE

5. **Access Ordering** (Cont'd)

5.2 Access Order (Cont'd)

(B) Feature Group B Switched Access Service (Cont'd)

(5) A projected Percentage of Interstate Use (PIU) as specified in Section 2.3.9, preceding.
(6) The access code dialing arrangement (i.e., a uniform access code of 950-XXXX.

(C) Feature Group D Switched Access Service

(1) The Telephone Company end office where service is requested or the access tandem switch for non-MTS/WATS providers.
(2) The number and type of busy hour minutes of capacity (BHMC) requested by Feature Group from the customer premises to the end office.
(3) The customer premises where service is requested.

ACCESS SERVICE

5. **Access Ordering** (Cont'd)

5.2 Access Order (Cont'd)

(C) Feature Group D Switched Access Service (Cont'd)

(4) Customers order FGD by specifying the number of trunks desired between customer premises and an entry switch. When ordering by trunk quantities rather than BHMC quantities to an access tandem, the customer must also provide the Telephone Company an estimate of the amount of traffic it will generate to and/or from each end office subtending the access tandem to assist the Telephone Company in its own efforts to project future facility requirements.

(5) For Toll Free Number Data Base Access Service, as described in Section 6.3.5(A)(3)(a), following, the customer must order FGD to those access tandems or end offices designated as Service Switching Points (SSP) for Toll Free Number Data Base Access Service in NATIONAL EXCHANGE CARRIER ASSOCIATION, INC. TARIFF F.C.C No. 4, WIRE CENTER INFORMATION. Direct trunk routes can only be provided from end offices equipped to query centralized databases. All traffic originating from end offices not equipped to provide SS7 signaling and routing require routing via an access tandem where SSP functionality is available.

Joe Jetensky, Manager
HunTel Communications
1605 Washington Street
Blair, NE 68008

ACCESS SERVICE

5. **Access Ordering** (Cont'd)

5.2 Access Order (Cont'd)

(D) For Feature Group D with SS7 Signaling, in addition to the information listed in (C), preceding, the customer shall specify: *

(1) A reference to existing signaling connections or reference to a related signaling connection order.
(2) SS7 Signaling Local Switching options, if any.
(3) The number of BHMC or trunks required for or to be converted to an SS7 Signaling capability.
(4) Optional features as specified in Section 6.

(E) Special Access Services

(1) The type of service requested (Voice Grade, High Capacity, etc.)
(2) The customer premises or hubs involved.
(3) The channel interface, technical specification package and options desired.
(4) When requesting Special Access Service, the customer must certify that the traffic consists of more than ten- percent interstate traffic.
(5) Where the Special Access Service is exempt from the Special Access Surcharge as set forth in Section 7.4.4(B), following, the customer shall furnish with the order the certification as set forth in Section 7.4.4(C), following.

* SS7 Signaling is available only where technically feasible.

Joe Jetensky, Manager
HunTel Communications
1605 Washington Street
Blair, NE 68008

ACCESS SERVICE

5. **Access Ordering** (Cont'd)

5.2 Access Order (Cont'd)

(E) Special Access and Direct Trunked Transport Services (Cont'd)

(6) Special Access or Direct Trunked Transport Service may be ordered for connection with FGA, FGB or FGD Switched Access Service at Telephone Company designated WATS Serving Offices (WSOs) for the provision of WATS or WATS-type Services and may be ordered separately by a customer other than the customer which orders the FGA, FGB or FGD Switched Access Service. For the Special Access Service the customer shall specify the customer premises at which the Special Access Service terminates, the type of line (i.e., two-wire or four-wire), the type of calling (i.e., originating, terminating, or two way) and the type of Supervisory Signaling.

When the optional screening, switching and/or recording functions are not provided at the customer serving wire center, Channel Mileage, as set forth in Section 7.1.1, following, must be ordered between that wire center and the nearest WSO where the screening, switching and/or recording functions can be provided.

5.3 Traffic Engineering Responsibilities

(A) Determination of Busy Hour Minutes of Capacity (BHMC)

It is the responsibility of the customer to determine the BHMC when ordering FGD or CCSAC Switched Access Service.

The BHMC may be determined by the customer in the following manner. For each day (8 a.m. to 11 p.m., Monday through Friday, excluding national holidays), the customer shall determine the highest number of minutes of use for a single hour (e.g., 55 minutes in the 10-11 AM hour).

Joe Jetensky, Manager
HunTel Communications
1605 Washington Street
Blair, NE 68008

ACCESS SERVICE

5. **Access Ordering** (Cont'd)

5.3 Traffic Engineering Responsibilities (Cont'd)

(A) Determination of Busy Hour Minutes of Capacity (BHMC) (Cont'd)

The customer shall, for the same hour period (i.e., busy hour) for each of twenty consecutive business days, pick the twenty consecutive business days in a calendar year which add up to the largest number of minutes of use. Both originating and terminating minutes shall be included. The customer shall then determine the average busy hour minutes of capacity (i.e., BHMC) by dividing the largest number of minutes of use figure for the same hour period for the consecutive twenty business day period by 20. This computation shall be performed for each end office the customer wishes to serve.

The total BHMC by type for each end office will be converted to transmission paths using standard Telephone Company traffic engineering methods.

(B) Determination of SS7 Signaling Connections

For Feature Group D with SS7 Signaling, the customer shall work cooperatively with the Telephone Company or its agent for CCSAC interconnection to determine the number of signaling connections required to handle its signaling traffic.

5.4 Access Order Service Intervals

To the extent the Access Service can be made available with reasonable effort, the Telephone Company will provide Access Service in accordance with the customer's requested interval. The Telephone Company is not responsible for any delays caused by any other connecting exchange telephone company in the provision of service to the customer's point of termination.

If, in order to meet the customer's requested service date, work must be performed outside scheduled work hours; Additional Labor charges as described in Section 9., following, will apply.

ACCESS SERVICE

5. **Access Ordering** (Cont'd)

5.4 Access Order Service Intervals (Cont'd)

When the Telephone Company has identified in NATIONAL EXCHANGE CARRIER ASSOCIATION, INC. TARIFF F.C.C. No. 4, Wire Center Information that it has not received a bona fide request for Direct Trunked Transport and a customer subsequently orders Direct Trunked Transport, the Telephone Company will work cooperatively with the customer to provide Direct Trunked Transport within 90 days of receipt of an order.

5.5 Access Order Modifications

The customer may request a modification of its Access Order prior to the service date. The Telephone Company will make every effort to accommodate a requested modification when it is able to do so with the normal work force assigned to complete such an order within normal business hours. If the modification cannot be made with the normal work force during normal business hours, the Telephone Company will notify the customer that additional labor and/or engineering charges will apply. If the customer still desires the Access Order modification and agrees to any additional charges which may apply, the Telephone Company will schedule a new service date. An amount equivalent to one-half the charges, as described in Section 12.5(J), following, will apply for a change in service date or design.

(A) Service Date Change

Access Order service dates may be changed, but the new service date may not exceed the original service date by more than 30 calendar days. If the customer requested service date is more than 30 calendar days after the original service date, the order will be cancelled by the Telephone Company and reissued. The appropriate cancellation charges as set forth in Section 5.6(B), following, will apply. If the Telephone Company determines it can accommodate the customer's request with the normal work force during normal business hours and without delaying service dates for orders of other customers, a new service date may be established that is prior to the original service date.

ACCESS SERVICE

5. **Access Ordering** (Cont'd)

5.5 Access Order Service Modifications (Cont'd)

(A) Service Date Change (Cont'd)

If the requested service date is changed to an earlier date, and the Telephone Company determines additional labor or extraordinary costs are necessary to meet the request, the customer will be notified by the Telephone Company. If the customer still desires the change, the Telephone Company will schedule a new service date.

(B) Change in Lines or Capacity

Any increase in the number of Special Access Service channels or Switched Access Service lines, trunks or busy hour minutes of capacity will be treated as a new Access Order (for the increased amount only).

Any decrease in the number of ordered Special Access Service channels or Switched Access Service lines, trunks or busy hour minutes of capacity will be treated as a partial cancellation and the charges as set forth in Section 5.6(B), following, will apply.

5.6 Cancellation of an Access Order

(A) A customer may cancel an Access Order for the installation of service on any date prior to the service date. The cancellation date is the date the Telephone Company receives written or verbal notice from the customer that the order is to be cancelled. The verbal notice must be followed by written confirmation within 10 days. If the customer is unable to accept Access Service within 30 days after the service date, at the customer's option, service will be cancelled and charges set forth in (B), following, will apply, or billing for the access service will commence on the 31st day after the service date.

ACCESS SERVICE

5. **Access Ordering** (Cont'd)

5.6 Cancellation of an Access Order (Cont'd)

(B) When a customer cancels an Access Order, a Cancellation Charge will apply as follows:

(1) Installation of Switched or Special Access Service facilities is considered to have started when the Telephone Company incurs any cost in connection with the installation. Where installation of access facilities has been started prior to the cancellation, the charges specified in (a) or (b), following, whichever is less, shall apply.

(a) A charge equal to the nonrecoverable cost of equipment and material ordered, provided or used, plus the nonrecoverable cost of installation and removal including the costs of engineering, labor, supervision, transportation, right-of-way and other associated costs less actual net salvage received after disposal of facilities.

(b) The charge for the minimum period of Switched or Special Access Service ordered by the customer.

(2) Where the customer cancels an Access Order prior to the start of installation of access facilities, no charges shall apply.

(C) If the Telephone Company misses a service date by more than 30 days due to circumstances over which it has direct control (excluding, e.g., Acts of God, governmental requirements, work stoppages and civil commotions), the customer may cancel the Access Order without incurring cancellation charges.

Joe Jetensky, Manager
HunTel Communications
1605 Washington Street
Blair, NE 68008

ACCESS SERVICE

5. **Access Ordering** (Cont'd)

5.7 Selection of Facilities for Access Orders

The Telephone Company will make a reasonable effort to accommodate a customer request for a specific transmission path. The Telephone Company will make the final determination as to transmission paths utilized in the provision of service.

5.8 Minimum Period

The minimum period for which Access Service is provided and for which charges are applicable is one month.

When Access Service is disconnected prior to the expiration of the minimum period, charges are applicable for the balance of the minimum period.

The Minimum Period Charge for monthly billed services will be determined as follows:

(A) For Switched Access Service the minimum period charge is set forth in Section 6.7.3, following.

Switched Access usage rated services (i.e., End Office and Tandem Switched Transport) have no minimum period. The minimum period for which all other Access Service is provided and for which charges are applicable, is one month.

(B) For Special Access Service and flat rated Switched Access Service, the charge for a month or fraction thereof is the applicable monthly rate for the service as set forth in Section 12.2(B)(1) and (4) and Section 12.3, following, plus any optional features or nonrecurring charges that may apply.

ACCESS SERVICE

5. **Access Ordering** (Cont'd)

5.8 Minimum Period (Cont'd)

(B) (Cont'd)

The minimum period for Switched Access High Capacity DS1 Entrance Facilities and Direct Trunked Transport is one month. The minimum period for High Capacity DS1 Special Access Services is one month, as set forth in Section 7.4.2, following.

5.9 Access Orders for Services Provided by More Than One Telephone Company

Access Services provided by more than one Telephone Company are services where one end of the Local Transport or Channel Mileage element is in the operating territory of one Telephone Company and the other end of the element is in the operating territory of a different Telephone Company or where Toll Free Number Data Base Access Service and the end office are not provided by the same Telephone Company.

The ordering procedure for this service is dependent upon the billing arrangement, as set forth in Section 2.4.5, preceding, to be used by the Telephone Companies involved in providing the Access Service. The Telephone Company will notify the customer which of the ordering procedures will apply.

(A) Single Company Billing

The Telephone Company receiving the order for Feature Group A or Feature Group B from the customer will arrange to provide the service and bill the customer as set forth in Section 2.4.5, preceding. The customer will place the order with the Telephone Company as follows:

ACCESS SERVICE

5. **Access Ordering** (Cont'd)

5.9 Access Orders for Services Provided by More Than One Telephone Company (Cont'd)

(A) Single Company Billing (Cont'd)

(1) For Switched Access Services the customer will place the order with the Telephone Company in whose territory the first point of switching is located. The first point of switching is:

- FGA - dial tone office
- FGB - access tandem, end office or Centralized Equal Access provider
- FGD - end office or access tandem

When the first point of switching is not in the same Telephone Company's territory as the Interexchange Carrier premises, the customer must supply a copy of the order to the Telephone Company in whose territory the Interexchange Carrier premises is located and any other Telephone Company(s) involved in providing the service. When service is provided through a Centralized Equal Access provider, the customer must supply a copy of the order to that provider.

(2) For Special Access Services without the use of a hub, the customer will place the order with the Telephone Company in whose territory the customer premises is located.

ACCESS SERVICE

5. **Access Ordering** (Cont'd)

5.9 Access Orders for Services Provided by More Than One Telephone Company (Cont'd)

(A) Single Company Billing (Cont'd)

(3) For Special Access Services with a hub, the customer will place the order with the Telephone Company in whose territory the hub is located.

(B) Multiple Company (Interconnection Point) Billing

Each Telephone Company will provide its portion of the Access Service within its operating territory to an interconnection point(s) (IP) with the other Telephone Company(s). The interconnection point(s) and Billing Percentages will be determined by the Telephone Companies involved in providing the Access Service and listed in NATIONAL EXCHANGE CARRIER ASSOCIATION, INC. TARIFF F.C.C. No. 4. Each Telephone Company will bill the customer for its portion of the service as set forth Section 2.4.5, preceding. All other appropriate charges in each Telephone Company tariff are applicable.

For the service(s) ordered as set forth following, the customer must also supply a copy of the order to the Telephone Company in whose operating territory a customer premises is located and any other Telephone Company(s) involved in providing the service. Additionally, when service is provided through a Centralized Equal Access provider, the customer must supply a copy of the order to that provider.

Joe Jetensky, Manager
HunTel Communications
1605 Washington Street
Blair, NE 68008

ACCESS SERVICE

5. **Access Ordering** (Cont'd)

5.9 Access Orders For Services Provided By More Than One Telephone Company (Cont'd)

(B) Multiple Company (Interconnection Point) Billing (Cont'd)

(1) For Feature Group A and B Switched Access Service, the customer must place an order with the Telephone Company in whose territory the first point of switching is located, (i.e., FGA - dial tone office, FGB - access tandem or end office). The Telephone Company will designate the first point(s) of switching for FGB Services where the Telephone Company elects to provide equal access through a centralized equal access arrangement. Those Telephone Company offices providing equal access through centralized arrangements are identified in EXCHANGE CARRIER ASSOCIATION, INC. TARIFF F.C.C. No. 4.

(2) For Feature Group D Switched Access Service, the customer must place an order with the Telephone Company in whose territory the end office is located.

Customers (other than AT&T) may order FGD in trunk quantities desired between the customer premises and the access tandem.

(3) Except for Special Access Service provided as set forth in (4) or (5), following, the customer may place the order for a Special Access Service with either Exchange Telephone Company.

(4) For Special Access Service involving a hub(s), the customer must place the order with the Telephone Company in whose territory the hub(s) is located.

ACCESS SERVICE

5. **Access Ordering** (Cont'd)

5.9 Access Orders For Services Provided By More Than One Telephone Company (Cont'd)

(B) Multiple Company (Interconnection Point) Billing (Cont'd)

(5) For Special Access Service to be interconnected with Switched Access Services at Telephone Company designated WATS Serving Offices for the provision of WATS or WATS-type Services, the customer must place an order with each Telephone Company in whose territory the end office and the WATS Serving Office are located, if they are not collocated.

(6) When FGA is ordered in a multi-Telephone Company provided Extended Area Service area or FGB is ordered in a multi-Telephone Company access tandem arrangement, the customer must provide a copy of the order to all Secondary Exchange Carriers. Each Exchange Carrier will bill as set forth in Section 2.4.5, preceding.

(7) For the service(s) ordered as set forth preceding, the customer must also supply a copy of the order to the Telephone Company in whose operating territory a customer premises is located and any other Telephone Company(s) involved in providing the service.

ACCESS SERVICE

6. Switched Access Service

6.1 General

Switched Access Service, which is available to customers for their use in furnishing their services to end users, provides a communication path between a customer premises and an end user's premises. It provides for the use of common terminating, switching and trunking facilities and common subscriber plant of the Telephone Company. Switched Access Service provides for the ability to originate calls from an end user's premises to a customer premises, and to terminate calls from a customer premises to an end user's premises in the LATA where it is provided. Specific references to material describing the elements of Switched Access Service are provided in Section 6.2, following.

Rates and charges for Switched Access Service depend generally on the specific Feature Group ordered by the customer, e.g., for MTS or WATS services or MTS/WATS equivalent services or Toll Free Number Data Base Access Service. Rates and Charges for Switched Access Service are set forth in Section 12.2, following. The application of rates for Switched Access Service is described in Section 6.7.1, following.

The provision of each Feature Group requires Local Transport facilities, including an Entrance Facility where required, and the appropriate End Office functions. In addition, Special Access Service may, at the option of the customer, be connected with Feature Groups A, B, or D at Telephone Company designated WATS Serving Offices.

There are three specific transmission specifications (i.e., Types A, B and C) that have been identified for the provision of Feature Groups. The technical specifications for the Entrance Facility and Direct Trunked Transport are the same as those set forth in Section 7.2.2 and 7.2.5, following, for Voice Grade and High Capacity services. The specifications provided are dependent on the Interface Group and the routing of the service, i.e., whether the service is routed directly to the end office or via an access tandem. The parameters for the transmission specifications are set forth in Section 11, following.

Joe Jetensky, Manager
HunTel Communications
1605 Washington Street
Blair, NE 68008

ACCESS SERVICE

6. **Switched Access Service** (Cont'd)

6.1 General (Cont'd)

The following provision applies to the treatment of Toll VoIP-PSTN Traffic pursuant to the Federal Communications Commission's Part 51 Interconnection Rules and in compliance with the Federal Communications Commission's Report and Order and Further Notice of Proposed Rulemaking in CC Docket Nos. 96-45 and 01-92; GN Docket No. 09-51; WC Docket Nos. 03-109, 05-337, 07-135 and 10-90; and WT Docket No. 10-208, adopted October 27, 2011 and released November 18, 2011 (FCC 11-161). In the absence of an interconnection agreement between the Telephone Company and the customer specifying the treatment of Toll VoIP-PSTN Traffic, the Telephone Company will bill the customer the applicable switched access rates and charges specified in Section 12.2 following, on all jurisdictionally interstate voice traffic identified as Toll VoIP-PSTN Traffic. (N)

6.2 Rate Categories

There are three rate categories which apply to Switched Access Service:

- Local Transport
- End Office
- Chargeable Optional Features

ACCESS SERVICE

6. **Switched Access Service** (Cont'd)

6.2 Rate Categories (Cont'd)

The Feature Groups offered by the Telephone Company are described in Section 6.3, following. Access minutes are described in Section 6.7.4, following. Rate application is described in Section 6.7.1, following.

The following diagram depicts a generic view of the components of Switched Access Service and the manner in which the components are combined to provide a complete Access Service.

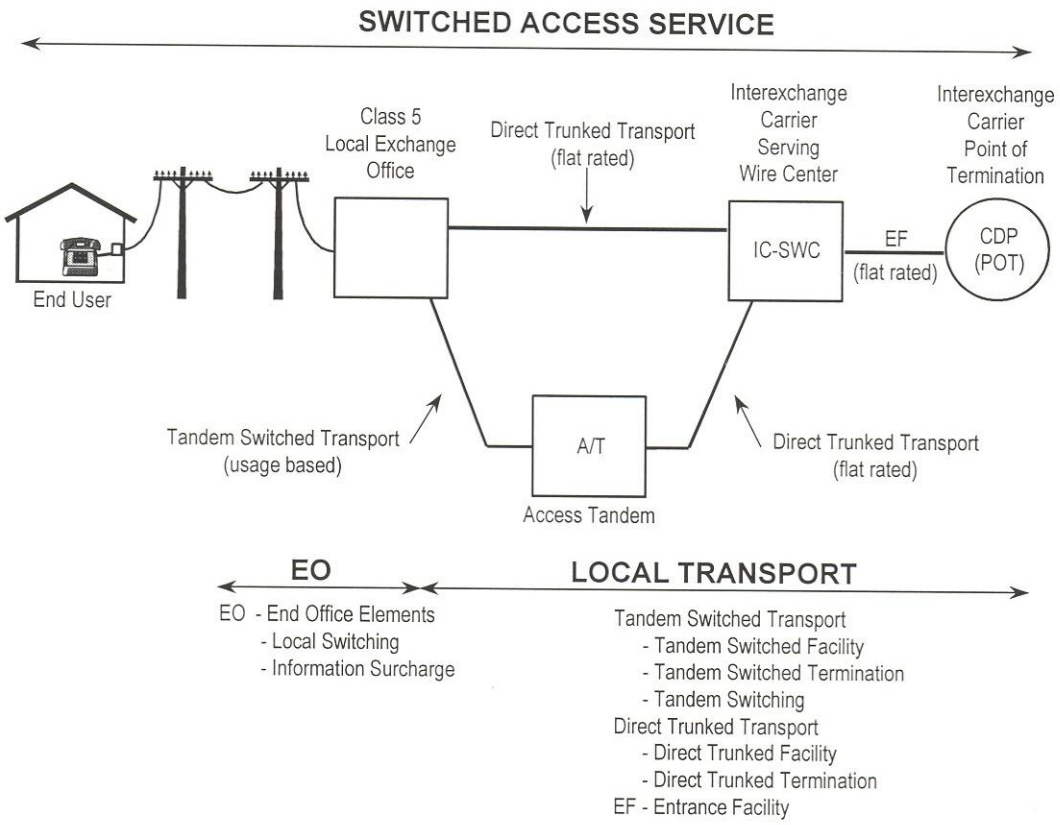

Joe Jetensky, Manager
HunTel Communications
1605 Washington Street
Blair, NE 68008

ACCESS SERVICE

6. **Switched Access Service** (Cont'd)

6.2 Rate Categories (Cont'd)

(A) Local Transport

Local Transport provides the transmission and tandem switching facilities between the customer premises and each end office switch of the Telephone Company where the customer's traffic is switched when originating and terminating the customer's traffic. Some Local Transport rate elements are distance sensitive, while others are non-distance sensitive.

If the customer utilizes the facilities of another connecting exchange carrier to access the Telephone Company end office switch for the provision of switched access service, the Local Transport charge will provide facilities between the end office switch and the interconnection point with the connecting exchange carrier.

Local Transport is a two-way voice frequency transmission path composed of facilities determined by the Telephone Company in accordance with the customer's order. The two-way voice frequency transmission path permits the transport of calls in the originating direction (from the end user end office switch to the customer's premises) and in the terminating direction (from the customer's premises to the end office switch), but not simultaneously. The voice frequency transmission path may be comprised of any type of plant capable of the transmission of voice and associated telephone signals within the frequency bandwidth of approximately 300 to 3,000 HZ. The customer must specify the choice of facilities (i.e., Voice Grade 2- or 4-wire or High Capacity DS1 or DS3) to be used in the provision of the Direct Trunked Transport or Entrance Facility.

ACCESS SERVICE

6. **Switched Access Service** (Cont'd)

6.2 Rate Categories (Cont'd)

(A) Local Transport (Cont'd)

The customer must specify when ordering (1) whether the service is to be directly routed to an end office switch or through an access tandem switch, (2) if Direct Trunked Transport is ordered, the type of facilities to be used (i.e., Voice Grade or DS1), (3) the type of Entrance Facility, (4) the directionality of the service, and (5) when multiplexing is required, the hub(s) at which the multiplexing will be provided. Additionally, when service is to be routed through an access tandem switch, the customer must specify whether the facility between the serving wire center and the tandem is to be provided as Direct Trunked Transport or Tandem Switched Transport.

In Host/Remote configurations, the Tandem Switched Termination rate will always apply for traffic routed between the Host and Remote offices, regardless of the type of service ordered between the Serving Wire Center and the Host office.

Unless otherwise ordered by the F.C.C., where the Telephone Company elects to provide equal access through a Centralized Equal Access arrangement, the Telephone Company will designate the serving wire center. The designated serving wire center will normally be that wire center which provides dial tone to the telephone company Centralized Equal Access tandem office identified in NATIONAL EXCHANGE CARRIER ASSOCIATION, INC. TARIFF F.C.C. No. 4. When service is provided in cooperation with a non-telephone company provider of Centralized Equal Access, the serving wire center will be that wire center which would normally provide dial tone to the telephone company point of interconnection with the non-telephone company provider of Centralized Equal Access specified in the tariff of the Centralized Equal Access provider. Those Telephone Company offices providing equal access through centralized arrangements are identified in NATIONAL EXCHANGE CARRIER ASSOCIATION, INC. TARIFF F.C.C. No. 4.

Joe Jetensky, Manager
HunTel Communications
1605 Washington Street
Blair, NE 68008

ACCESS SERVICE

6. **Switched Access Service** (Cont'd)

6.2 Rate Categories (Cont'd)

(A) Local Transport (Cont'd)

When the customer has both Tandem Switched Transport and Direct Trunked Transport at the same end office, the customer will be provided Alternate Traffic routing, where available, as set forth in Section 6.3.5(A)(1)(n), following.

Direct Trunked Transport is available at all end offices except those identified in NATIONAL EXCHANGE CARRIER ASSOCIATION, INC. TARIFF F.C.C. No. 4, as not having the capability to provide Direct Trunked Transport. Direct Trunked Transport is not available: (1) from end offices that provide equal access through a Centralized Equal Access arrangement, (2) from end offices that lack recording or measurement capability, and (3) for originating 800 calls from non-Service Switching Point (SSP) equipped end offices that can not accommodate direct trunking of originating 800 calls.

Local Transport is provided at the rates and charges set forth in Section 12.2(B), following. The application of these rates is as set forth in Section 6.7, following. When more than one Telephone Company is involved in providing the Switched Access Service, the Local Transport rates are applied as set forth in Section 2.4.5, preceding.

The Local Transport Rate Category includes four classes of rate elements: (1) Entrance Facility, (2) Tandem Switched Transport, (3) Multiplexing, and (4) Direct Trunked Transport.

Joe Jetensky, Manager
HunTel Communications
1605 Washington Street
Blair, NE 68008

ACCESS SERVICE

6. **Switched Access Service** (Cont'd)

6.2 Rate Categories (Cont'd)

(A) Local Transport (Cont'd)

(1) Entrance Facility

The Entrance Facility recovers a portion of the costs associated with the communications path between a customer premises and the serving wire center of that premises. Included as part of the Entrance Facility is a standard channel interface arrangement which defines the technical characteristics associated with the type of facilities to which the access service is to be connected at the customer premises and the type of signaling capability, if any.

Two types of Entrance Facility are available: (1) Voice Grade 2- or 4-wire (an analog channel with an approximate bandwidth of 300 to 3,000 hz), and (2) High Capacity DS1 (an isochronous serial digital channel with a rate of 1.544 Mbps). The minimum period for which a DS1 Entrance Facility is provided is twelve months.

One charge applies for each Entrance Facility that is terminated at a customer premises. This charge will apply even if the customer premises and the serving wire center are collocated in a Telephone Company building.

At customer request, their Local Transport may be connected to the Entrance Facility of another customer, providing the other customer submits a Letter of Authorization for this connection and assumes full responsibility for the cost of the Entrance Facility.

ACCESS SERVICE

6. **Switched Access Service** (Cont'd)

6.2 Rate Categories (Cont'd)

(A) Local Transport (Cont'd)

(2) Tandem Switched Transport

The Tandem Switched Transport rate elements recover a portion of the costs associated with the communications path between the serving wire center and the end office between the tandem and the end office on circuits that are switched at a tandem switch, and between host and remote switching offices. Tandem Switched Transport consists of circuits dedicated to the use of a single customer from the serving wire center to the tandem and circuits used in common by multiple customers from the tandem to the end office.

Joe Jetensky, Manager
HunTel Communications
1605 Washington Street
Blair, NE 68008

ACCESS SERVICE

6. **Switched Access Service** (Cont'd)

6.2 Rate Categories (Cont'd)

(A) Local Transport (Cont'd)

(2) Tandem Switched Transport (Cont'd)

Tandem Switched Transport rates consist of a Tandem Switching rate, a Tandem Switched Facility rate, and a Tandem Switched Termination rate. The Tandem Switching rate recovers a portion of the costs of switching traffic through an access tandem. The Tandem Switching rate specified in Section 12, following, is applied on a per access minute per tandem basis for all originating and all terminating minutes of use switched at the tandem. Tandem locations are identified in NATIONAL EXCHANGE CARRIER ASSOCIATION, INC. TARIFF F.C.C. No. 4, WIRE CENTER INFORMATION.

The Tandem Switched Termination rate recovers a portion of the costs of the circuit equipment that is necessary for the termination of each end of the Tandem Switched Transport. Rates are applied on a per access minute basis.

The Tandem Switched Facility rate is applied on a per access minute per mile basis and recovers a portion of the costs of the transmission facilities, including intermediate transmission circuit equipment, between the end points of the interoffice circuits. The Tandem Switched Transport rates specified in Section 12, following, are applied for all originating and terminating minutes of use routed over the facility for each measured segment of the Tandem Switched Transport (remote office to host office, end office to serving wire center or end office to tandem). These rates apply from host office to remote office, even when Direct Trunking is ordered from the Serving Wire Center to the host office.

Joe Jetensky, Manager
HunTel Communications
1605 Washington Street
Blair, NE 68008

ACCESS SERVICE

6. **Switched Access Service** (Cont'd)

6.2 Rate Categories (Cont'd)

(A) Local Transport (Cont'd)

(3) Direct Trunked Transport

The Direct Trunked Transport rate elements recover a portion of the cost associated with a communications path between the serving wire center and the end office or serving wire center and a tandem on circuits dedicated to the use of a single customer.

Direct Trunked Transport is available to all tandems and to all end offices except those identified in NATIONAL EXCHANGE CARRIER ASSOCIATION, INC. TARIFF F.C.C. No. 4, WIRE CENTER INFORMATION as not having the capability to provide Direct Trunked Transport.

Direct Trunked Transport is not available: (1) from end offices that provide equal access through a Centralized Equal Access arrangement, (2) from end offices that lack recording or measurement capability, and (3) for originating Toll Free Number calls from non-Service Switching Point (SSP) equipped end offices that can not accommodate direct trunking of originating Toll Free Number calls.

Two types of Direct Trunked Transport are available: (1) Voice Grade (an analog channel with an approximate bandwidth of 300 to 3,000 Hz), and (2) High Capacity DS1 (an isochronous serial digital channel with a rate of 1.544 Mbps). The minimum period for which a High Capacity DS1 Direct Trunked Transport is provided is twelve months.

Joe Jetensky, Manager
HunTel Communications
1605 Washington Street
Blair, NE 68008

ACCESS SERVICE

6. **Switched Access Service** (Cont'd)

6.2 Rate Categories (Cont'd)

(A) Local Transport (Cont'd)

(3) Direct Trunked Transport (Cont'd)

DS1 Direct Trunked Transport can not be terminated at end offices that are not identified as hub offices that provide DS1 Voice Grade multiplexing or are not electronic end offices. Offices that provide multiplexing are identified in NATIONAL EXCHANGE CARRIER ASSOCIATION, INC. TARIFF F.C.C. No. 4, WIRE CENTER INFORMATION.

Direct Trunked Transport rates, as billed for in Section 12, following, consist of a Direct Trunked Facility rate which is applied on a per mile basis and a Direct Trunked Termination rate which is applied at each end of each measured segment of the Direct Trunked Facility (e.g., at the end office, hub, and serving wire Center). When the Direct Trunked Facility mileage is zero, neither the Direct Trunked Facility rate nor the Direct Trunked Termination rate will apply.

The Direct Trunked Facility rate recovers a portion of the costs of the transmission facilities, including intermediate transmission circuit equipment, between the end points of the interoffice circuits.

The Direct Trunked Termination rate recovers a portion of the costs of the circuit equipment that is necessary for the termination of each end of the Direct Trunked Facility.

Joe Jetensky, Manager
HunTel Communications
1605 Washington Street
Blair, NE 68008

ACCESS SERVICE

6. **Switched Access Service** (Cont'd)

6.2 Rate Categories (Cont'd)

(A) Local Transport (Cont'd)

(4) Multiplexing

DS1 to Voice Grade Multiplexing charges apply when a High Capacity DS1 Entrance Facility or High Capacity DS1 Direct Trunked Facility is connected with Voice Grade Direct Trunked Transport. However, a DS1 to Voice Grade Multiplexing charge does not apply when a High Capacity DS1 Entrance Facility or High Capacity DS1 Direct Trunked Transport is terminated at an electronic end office and only Switched Access Service is provided over the DS1 facility (i.e., Voice Grade Special Access channels are not derived). The DS1 to Voice multiplexer will convert a 1.544 Mbps channel to 24 Voice Grade channels.

Multiplexing is only available at wire centers identified in NATIONAL EXCHANGE CARRIER ASSOCIATION, INC. TARIFF F.C.C. No. 4, WIRE CENTER INFORMATION.

Joe Jetensky, Manager
HunTel Communications
1605 Washington Street
Blair, NE 68008

ACCESS SERVICE

6. **Switched Access Service** (Cont'd)

6.2 Rate Categories (Cont'd)

(A) Local Transport (Cont'd)

(5) Interface Groups

Ten Interface Groups are provided for terminating the Entrance Facility at the customer's premises. Each Interface Group provides a specified premises interface (e.g., two-wire, four-wire, DS1, etc.). Where transmission facilities permit, the individual transmission path between the customer's premises and the first point of switching may, at the option of the customer, be provided with optional features as set forth in (2), preceding. The interface groups described in Section 11.1, following, and the optional features described in (2), preceding, are nonchargeable features. No additional charges other than the rate for Local Transport provided for in Section 12, following, apply.

As a result of the customer's access order and the type of Telephone Company transport facilities serving the customer's premises, the need for signaling conversions or two-wire to four-wire conversions, or the need to terminate digital or high frequency facilities in channel bank equipment may require that Telephone Company equipment be placed at the customer's premises. For example, if a voice frequency interface is ordered by the customer and the Telephone Company facilities serving the customer's premises are digital, then Telephone Company channel bank equipment must be placed at the customer's premises in order to provide the voice frequency interface ordered by the customer.

Technical specifications concerning the available interface groups are set forth in Section 11.1, following.

Joe Jetensky, Manager
HunTel Communications
1605 Washington Street
Blair, NE 68008

ACCESS SERVICE

6. **Switched Access Service** (Cont'd)

6.2 Rate Categories (Cont'd)

(A) Local Transport (Cont'd)

(6) Nonchargeable Optional Features

Where transmission facilities permit, the Telephone Company will, at the option of the customer, provide the following nonchargeable optional features in association with Local Transport.

(a) Supervisory Signaling

Where the transmission parameters permit, and where signaling conversion is required by the customer to meet its signaling capability, the customer may order an optional supervisory signaling arrangement for each transmission path provided as set forth in Section 11.1.12, following.

(b) Customer Specified Entry Switch Receive Level

This feature allows the customer to specify the receive transmission level at the first point of switching. The range of transmission levels which may be specified is described in Technical Reference TR-NWT-000335. This feature is available with Interface Groups 2 through 10 for Feature Groups A and B.

(c) Customer Specification of Local Transport Termination

This option allows the customer to specify, for Feature Group B routed directly to an end office or access tandem, a four-wire termination of the Local Transport at the entry switch in lieu of a Telephone company selected two-wire termination. This option is available only when the Feature Group B arrangement is provided with Type B Transmission Specifications.

Joe Jetensky, Manager
HunTel Communications
1605 Washington Street
Blair, NE 68008

ACCESS SERVICE

6. **Switched Access Service** (Cont'd)

6.2 Rate Categories (Cont'd)

(B) End Office

The End Office rate category provides the local end office switching and end user termination functions necessary to complete the transmission of Switched Access communications to and from the end users served by the local end office. The End Office rate category includes the Local Switching and Line Termination rate elements.

(1) Local Switching

The Local Switching rate element provides the local end office switching functions associated with Feature Groups A, B, and D and the transport termination for the trunk side arrangements which terminate the Local Transport facilities. The Local Switching rate applies to all Feature Groups providing Switched Access Service, including providers of MTS and WATS. Rates for Local Switching are set forth in Section 12.2(C)(1), following.

(2) Directory Assistance Information Surcharge

Directory Assistance Information Surcharge rates are assessed to a customer based on the total number of access minutes. Directory Assistance Information Surcharge rates are as set forth in Section 12.2(C)(3), following.

(C) Non-Chargeable Optional Features

Where facilities permit, the Telephone Company will, at the option of the customer, provide the following non-chargeable optional features. These optional features are described in Section 6.3.5, following.

ACCESS SERVICE

6. **Switched Access Service** (Cont'd)

6.2 Rate Categories (Cont'd)

(D) Rate Regulations

This section contains the specific regulations governing the rates and charges that apply for Switched Access Service.

(1) Description and Application of Rate

There are two types of rates and charges that apply to Switched Access Service: recurring (usage and flat rates) and nonrecurring charges.

(a) Recurring Rates

1. Usage Rates for Switched Access Service are rates that apply on a per access minute or a per call basis. Access minute charges and per call charges are accumulated over a monthly period.

2. Flat Rates for Switched Access Service are rates that apply on a per month per rate element basis.

(b) Nonrecurring Charges

Nonrecurring charges, as specified in 12.2(A)(1) and (2), following, are one-time charges that apply for a specific work activity (i.e., installation or change to an existing service). The types of nonrecurring charges that apply for Switched Access Service are installation of service and service rearrangements.

Joe Jetensky, Manager
HunTel Communications
1605 Washington Street
Blair, NE 68008

ACCESS SERVICE

6. **Switched Access Service** (Cont'd)

6.2 Rate Categories (Cont'd)

RESERVED FOR FUTURE USE

Joe Jetensky, Manager
HunTel Communications
1605 Washington Street
Blair, NE 68008

ACCESS SERVICE

6. **Switched Access Service** (Cont'd)

6.3 Provision and Description of Switched Access Service Feature Groups

Switched Access Service is provided in three Feature Group arrangements:

- Feature Group A
- Feature Group B
- Feature Group D

The Local Transport, End Office, and Common Line rate categories described in Section 6.2., preceding, apply to all Switched Access Service.

6.3.1 Feature Group A (FGA)

(A) Description

(1) FGA is provided in connection with Telephone Company electronic and electromechanical end offices. At the option of the customer, FGA is provided on a single or multiple line group basis and is arranged for originating calling only, terminating calling only, or two-way calling.

(2) FGA provides a line side termination at the first point of switching (dial tone office). The line side termination will be provided with either ground start or loop start supervisory signaling. The type of signaling is at the option of the customer.

(3) The Telephone Company shall select the first point of switching, within the selected LATA, at which the line side termination is to be provided unless the customer requests a different first point of switching and Telephone Company facilities and measurement capabilities, where necessary, are available to accommodate such a request.

FGA will be provisioned over an Entrance Facility from the customer's premises to the customer's serving wire center.

ACCESS SERVICE

6. **Switched Access Service** (Cont'd)

6.3 Provision and Description of Switched Access Service Feature Groups (Cont'd)

6.3.1 Feature Group A (FGA) (Cont'd)

(A) Description (Cont'd)

(3) (Cont'd)

FGA service, when used in the originating direction, will be provisioned as Direct Trunked Transport from the first point of switching (i.e., the end office switch where FGA switching dial tone is provided) to the customer's serving wire center.

FGA service, when used in the terminating direction, will be provisioned as Direct Trunked Transport from the customer's serving wire center to the first point of switching and provisioned as Tandem Switched Transport from the first point of switching to the terminating end office.

(4) A seven-digit local telephone number assigned by the Telephone Company is provided for access to FGA switching in the originating direction. The seven-digit local telephone number will be associated with the selected end office switch and is of the form NXX-XXXX.

If the customer requests a specific seven digit telephone number that is not currently assigned, and the Telephone Company can, with reasonable effort, comply with that request, the requested number will be assigned to the customer.

Joe Jetensky, Manager
HunTel Communications
1605 Washington Street
Blair, NE 68008

ACCESS SERVICE

6. **Switched Access Service** (Cont'd)

6.3 Provision and Description of Switched Access Service Feature Groups (Cont'd)

6.3.1 Feature Group A (FGA) (Cont'd)

(A) Description (Cont'd)

(5) FGA switching, when used in the terminating direction, is arranged with dial tone start-dial signaling. When used in the terminating direction FGA switching may, at the option of the customer, be arranged for dial pulse or dual tone multifrequency address signaling, subject to availability of equipment at the first point of switching. When FGA switching is provided in a hunt group or uniform call distribution arrangement, all FGA switching will be arranged for the same type of address signaling.

(6) No address signaling is provided by the Telephone Company when FGA Switching is used in the originating direction. Address signaling in such cases, if required by the customer, must be provided by the customer's end user using inband tone signaling techniques. Such inband tone address signals will not be regenerated by the Telephone Company and will be subject to the ordinary transmission capabilities of the Local Transport provided.

Joe Jetensky, Manager
HunTel Communications
1605 Washington Street
Blair, NE 68008

ACCESS SERVICE

6. **Switched Access Service** (Cont'd)

6.3 Provision and Description of Switched Access Service Feature Groups (Cont'd)

6.3.1 Feature Group A (FGA) (Cont'd)

(A) Description (Cont'd)

(7) FGA switching, when used in the terminating direction, may be used to access valid NXXs in the LATA, local operator service (0- and 0+), Directory Assistance (411 where available and 555-1212), emergency reporting service (911 where available), exchange telephone repair (611 where available), time or weather announcement services of the Telephone Company, community information services of an information service provider, and other customers' services (by dialing the appropriate digits). Charges for FGA terminating calls requiring operator assistance or calls to 611 or 911 will only apply where sufficient call details are available. Additional non-access charges will also be billed on a separate account for (1) an operator surcharge, as set forth in the local exchange tariffs, for local operator assistance (0- and 0+) calls, (2) calls to certain community information services, for which rates are applicable under Telephone Company exchange service tariffs, e.g., 976 (DIAL-IT) Network Services, and, (3) calls from a FGA line to another customer's applicable service rates when the Telephone Company performs the billing function for that customer.

ACCESS SERVICE

6. **Switched Access Service** (Cont'd)

6.3 Provision and Description of Switched Access Service Feature Groups (Cont'd)

6.3.1 Feature Group A (FGA) (Cont'd)

(A) Description (Cont'd)

(8) When a FGA switching arrangement for an individual customer (a single line or entire hunt group) is discontinued at an end office, an intercept announcement is provided. This arrangement provides, for a limited period of time, an announcement that the service associated with the number dialed has been discontinued.

(B) Transmission Specifications

FGA is provided with either Type B or Type C Transmission Specifications. The specifications for the associated parameters are guaranteed to the first point of switching. Type C Transmission Specifications are provided with Interface Group 1 and Type B is provided with Interface Groups 2 through 10. Type DB Data Transmission Parameters are provided with FGA to the first point of switching.

(C) Testing Capabilities

FGA is provided, in the terminating direction where equipment is available, with seven-digit access to balance (100 type) test line and milliwatt (102 type) test line. Additional testing services are available as set forth in Section 9.2.5, following, for FGA.

Joe Jetensky, Manager
HunTel Communications
1605 Washington Street
Blair, NE 68008

ACCESS SERVICE

6. **Switched Access Service** (Cont'd)

6.3 Provision and Description of Switched Access Service Feature Groups (Cont'd)

6.3.1 Feature Group A (FGA) (Cont'd)

(C) Testing Capabilities (Cont'd)

(1) Acceptance Testing

At no additional charge, the Telephone Company will, at the customer's request, cooperatively test, at the time of installation, the following parameters: loss, C-notched noise, C-message noise, 3-tone slope, d.c. continuity and operational signaling.

(2) Routine Testing

At no additional charge, the Telephone Company will, at the customer's request, test after installation on an automatic or manual basis, 1,004 Hz loss, C-message noise and Balance (Return loss). In the case of automatic testing, the customer shall provide remote office test lines and 105 test lines with associated responders or their functional equivalent.

ACCESS SERVICE

6. **Switched Access Service** (Cont'd)

6.3 Provision and Description of Switched Access Service Feature Group (Cont'd)

6.3.2 Feature Group B (FGB)

(A) Description

(1) FGB, when directly routed to an end office (i.e., provided without the use of an access tandem switch), is provided at appropriately equipped Telephone Company electronic end office switches. When provided via Telephone Company electronic access tandem switches, FGB switching is provided at Telephone Company electronic and electromechanical end office switches.

(2) FGB is provided as trunk side switching through the use of end office or access tandem switch trunk equipment. The switch trunk equipment is provided with wink start start-pulsing signals and answer and disconnect supervisory signaling.

(3) FGB switching is provided with multifrequency address signaling in both the originating and terminating directions. Except for FGB switching provided with the automatic number identification (ANI) or rotary dial station signaling arrangements as set forth in Section 6.3.5, following, any other address signaling in the originating direction, if required by the customer, must be provided by the customer's end user inband tone signaling techniques. Such inband tone address signals will not be regenerated by the Telephone Company and will be subject to the ordinary transmission capabilities of the Local Transport provided.

Joe Jetensky, Manager
HunTel Communications
1605 Washington Street
Blair, NE 68008

ACCESS SERVICE

6. **Switched Access Service** (Cont'd)

6.3 Provision and Description of Switched Access Service Feature Groups (Cont'd)

6.3.2 Feature Group B (FGB) (Cont'd)

(A) Description (Cont'd)

(4) The access code for FGB switching is a uniform access code. The form of the uniform access code is 950-10XX for carriers. One uniform access code will be assigned to the customer for the customer's domestic communications and another will be assigned to the customer for its international communications, if required. These uniform access codes will be the assigned access numbers of all FGB switched access service provided to the customer by the Telephone Company.

(5) FGB switching, when used in the terminating direction, may be used to access valid NXXs in the LATA, time or weather announcement services of the Telephone Company, community information services of an information service provider and other customers' services (by dialing the appropriate digits). When directly routed to an end office, only those valid NXX codes served by that end office may be accessed. When routed through an access tandem, only those valid NXX codes served by end offices subtending the access tandem may be accessed. The customer will also be billed additional non-access charges for calls to certain community information services for which rates are applicable under Telephone Company exchange service tariffs, e.g., 976 (DIAL-IT) Network Service. Additionally, non-access charges will also be billed for calls from a FGB trunk to another customer's service in accordance with that customer's applicable service rates when the Telephone Company performs the billing

Joe Jetensky, Manager
HunTel Communications
1605 Washington Street
Blair, NE 68008

ACCESS SERVICE

6. **Switched Access Service** (Cont'd)

6.3 Provision and Description of Switched Access Service Feature Groups (Cont'd)

6.3.2 Feature Group B (FGB) (Cont'd)

(A) Description (Cont'd)

(5) (Cont'd)

function for that customer. Calls in the terminating direction will not be completed to 950-10XX access codes, local operator assistance (0- and 0+), Directory Assistance (411 and 555-1212), service codes 611 and 911 or 101XXXX access codes. FGB may not be switched, in the terminating direction, to Switched Access Service Feature Group B.

(6) The Telephone Company will establish a trunk group or groups for the customer at end office switches or access tandem switches where FGB switching is provided. When required by technical limitations, a separate trunk group will be established for each type of FGB switching arrangement provided. Different types of FGB or other switching arrangements may be combined in a single trunk group at the option of the Telephone Company.

(7) When all FGB switching arrangements are discontinued at an end office and/or in a LATA, an intercept announcement is provided. This arrangement provides, for a limited period of time, an announcement that the service associated with the number dialed has been disconnected.

Joe Jetensky, Manager
HunTel Communications
1605 Washington Street
Blair, NE 68008

ACCESS SERVICE

6. **Switched Access Service** (Cont'd)

6.3 Provision and Description of Switched Access Service Feature Groups (Cont'd)

6.3.2 Feature Group B (FGB) (Cont'd)

(B) Transmission Specifications

FGB is provided with either Type B or Type C Transmission Specifications. The specifications for the associated parameters are guaranteed to the end office when routed directly or to the first point of switching when routed via an access tandem. Type C Transmission Specifications are provided with Interface Group 1 and Type B is provided with Interface Groups 2 through 10. Type DB Data Transmission Parameters are provided with FGB to the first point of switching.

(C) Testing Capabilities

FGB is provided, in the terminating direction where equipment is available, with seven digit access to balance (100 type) test line, milliwatt (102 type) test line, nonsynchronous or synchronous test line, automatic transmission measuring (105 type) test line, data transmission (107 type) test line, loop around test line, short circuit test line and open circuit test line. Additional testing services are available as set forth in Section 9., following, for FGB.

(1) Acceptance Testing

At no additional charge, the Telephone Company will, at the customer's request, cooperatively test, at the time of installation, the following parameters: loss, C-notched noise, C-message noise, 3-tone slope, d.c. continuity and operational signaling.

ACCESS SERVICE

6. **Switched Access Service** (Cont'd)

6.3 Provision and Description of Switched Access Service Feature Groups (Cont'd)

6.3.2 Feature Group B (FGB) (Cont'd)

(C) Testing Capabilities (Cont'd)

(2) Routine Testing

At no additional charge, the Telephone Company will, at the customer's request, test after installation on an automatic or manual basis, 1,004 Hz loss, C-message noise and Balance (return loss). In the case of automatic testing, the customer shall provide remote office test lines and l05 test lines with associated responders or their functional equivalent.

6.3.3 Feature Group D (FGD)

(A) Description

(1) FGD is provided at Telephone Company designated office switches whether routed directly or via Telephone Company designated electronic access tandem switches. The Telephone Company will designate the first point(s) of switching for FGD services.

Joe Jetensky, Manager
HunTel Communications
1605 Washington Street
Blair, NE 68008

ACCESS SERVICE

6. **Switched Access Service** (Cont'd)

6.3 Provisions and Description of Switched Access Service Feature Groups (Cont'd)

6.3.3 Feature Group D (FGD) (Cont'd)

(A) Description (Cont'd)

(2) FGD is provided as trunk side switching through the use of end office or access tandem switch trunk equipment. The switch trunk equipment is provided with wink start start-pulsing signals and answer and disconnect supervisory signaling. When FGD with SS7 signaling is ordered, no inband signaling is provided.

(3) FGD switching is provided with multifrequency address signaling or out of band SS7 signaling. With multifrequency address signaling and SS7 signaling, up to 12 digits of the called party number dialed by the customer's end user using dual tone multifrequency or dial pulse address signals will be provided by Telephone Company equipment to the customer's premises where the Switched Access Service terminates. Such address signals will be subject to the ordinary transmission capabilities of the Local Transport provided.

(4) FGD switching, when used in the originating direction, is provided with multifrequency address signaling. Up to 12 digits of the called party number dialed by the customer's end user using dual tone multifrequency, dial pulse address signals, or common channel signals will be provided by Telephone Company equipment to the customer's premises where the Switched Access Service terminates. Such address signals will be subject to the ordinary transmission capabilities of the Local Transport provided.

Joe Jetensky, Manager
HunTel Communications
1605 Washington Street
Blair, NE 68008

ACCESS SERVICE

6. **Switched Access Service** (Cont'd)

6.3 Provisions and Description of Switched Access Service Feature Groups (Cont'd)

6.3.3 Feature Group D (FGD) (Cont'd)

(A) Description (Cont'd)

(5) FGD switching, when used in the terminating direction, may be used to access valid NXXs in the LATA, time or weather announcement services of the Telephone Company, community information services of an information service provider, and other customers' services (by dialing the appropriate codes) when such services can be reached using valid NXX codes. When directly routed to an end office, only those valid NXX codes served by that office may be accessed. When routed through an access tandem, only those valid NXX codes served by end offices subtending the access tandem may be accessed.

Additionally, non-access charges will also be billed for calls from a FGD trunk to another customer's service in accordance with that customer's applicable service rates when the Telephone Company performs the billing function for that customer. Calls in the terminating direction will not be completed to 950-0XXX or 950-1XXX access codes, local operator assistance (0- and 0+), Directory Assistance (411 and 555-1212), service codes, or 101XXXX access codes.

Joe Jetensky, Manager
HunTel Communications
1605 Washington Street
Blair, NE 68008

ACCESS SERVICE

6. **Switched Access Service** (Cont'd)

6.3 Provisions and Description of Switched Access Service Feature Groups (Cont'd)

6.3.3 Feature Group D (FGD) (Cont'd)

(A) Description (Cont'd)

(5) (Cont'd)

Calls will be completed to Directory Assistance (NPA-555-1212 or 555-1212) when FGD switching is combined with Directory Assistance switching. FGD may not be switched, in the terminating direction, to Switched Access Service Feature Groups B or D.

(6) The Telephone Company will establish a trunk group or groups for the customer at end office switches or access tandem switches where FGD switching is provided. When required by technical limitations, a separate trunk group will be established for each type of FGD switching arrangement provided. Different types of FGD or other switching arrangements may be combined in a single trunk group at the option of the Telephone Company.

Joe Jetensky, Manager
HunTel Communications
1605 Washington Street
Blair, NE 68008

ACCESS SERVICE

6. **Switched Access Service** (Cont'd)

6.3 Provisions and Description of Switched Access Service Feature Groups (Cont'd)

6.3.3 Feature Group D (FGD) (Cont'd)

(A) Description (Cont'd)

(7) The access code for FGD switching is a uniform access code of the form 101XXXX. A single access code will be the assigned number of all FGD access provided to the customer by the Telephone Company. No access code is required for calls to a customer over FGD Switched Access Service if the end user's telephone exchange service is arranged for presubscription to that customer, as set forth in Section 9.3.3, following.

Where no access code is required, the number dialed by the customer's end user shall be a seven or ten digit number for calls in the North American Numbering Plan (NANP).

For international calls outside the NANP, a seven to twelve digit number may be dialed. The form of the numbers dialed by the customer's end user is NXX-XXXX, 0 or 1+ NXX-XXXX, NPA + NXX-XXXX, 0 or 1+ NPA + NPA + NXX-XXXX, and, when the end office is equipped for International Direct Distance Dialing (IDDD, 01 + CC + NN or 011 + CC + NN).

ACCESS SERVICE

6. **Switched Access Service** (Cont'd)

6.3 Provisions and Description of Switched Access Service Feature Groups (Cont'd)

6.3.3 Feature Group D (FGD) (Cont'd)

(A) Description (Cont'd)

(7) (Cont'd)

When the 101XXXX access code is used, FGD switching also provides for dialing the digit 0 for access to the customer's operator, 911 for access to the Telephone Company's emergency reporting service, or the end-of-dialing digit (#) for cut-through access to the customer's premises.

Unless otherwise ordered by the F.C.C., when equal access is provided through a Centralized Equal Access arrangement, the 101XXXX access code may not be available in certain equal access offices. Those offices which provide FGD Switched Access Service without the 101XXXX access code are identified in the NATIONAL EXCHANGE CARRIER ASSOCIATION, INC. TARIFF F.C.C. No. 4.

(8) FGD switching will be arranged to accept calls from telephone exchange service locations without the need for dialing 101XXXX uniform access code. Each telephone exchange service line may be marked with a code to identify which 101XXXX code its calls will be directed to for interLATA service.

(9) Where facilities permit, the Telephone Company will, at the option of the customer, provide optional features. These optional features are described in Section 6.3.5, following.

Joe Jetensky, Manager
HunTel Communications
1605 Washington Street
Blair, NE 68008

ACCESS SERVICE

6. **Switched Access Service** (Cont'd)

6.3 Provisions and Description of Switched Access Service Future Groups (Cont'd)

6.3.3 Feature Group D (FGD) (Cont'd)

(B) Transmission Specifications

FGD is provided with either Type A, Type B or Type C Transmission Specifications as follows:

- When routed directly to the end office either Type B or C is provided.
- When routed to an access tandem only Type A is provided.
- Type A is provided on the transmission path from the access tandem to the end office.

Type C Transmission Specifications are provided with Interface Group 1. Type A and Type B Transmission Specifications are provided with Interface Groups 2 through 10.

Type DA Data Transmission Parameters are provided for the transmission path between the customer's premises and the access tandem and between the access tandem and the end office. Type DB Data Transmission Parameters are provided with FGD for the transmission path between the customer's premises and the end office when directly routed to the end office.

ACCESS SERVICE

6. **Switched Access Service** (Cont'd)

6.3 Provisions and Description of Switched Access Service Future Groups (Cont'd)

6.3.3 Feature Group D (FGD) (Cont'd)

(C) Testing Capabilities

FGD is provided, in the terminating direction where equipment is available, with seven digit access to balance (100 type) test line, milliwatt (102 type) test line, nonsynchronous or synchronous test line, automatic transmission measuring (105 type) test line, data transmission (107 type) test line, loop around test line, short circuit test line and open circuit test line. Additional testing services are available as set forth in Section 9., following, for FGD.

When FGD with SS7 signaling option is ordered, network compatibility and other operational tests will be performed cooperatively by the customer, the Telephone Company, and any agents contracted to provide CCSAC.

(1) Acceptance Testing

At no additional charge, the Telephone Company will, at the customer's request, cooperatively test, at the time of installation, the following parameters: Loss, C-notched noise, C-message noise, 3-tone slope, d.c. continuity and operational signaling.

(2) Routine Testing

At no additional charge, the Telephone Company will, at the customer's request, test after installation on an automatic or manual basis, 1,004 Hz loss, C-message noise and balance (return loss). In the case of automatic testing, the customer shall provide remote office test lines and 105 test lines with associated responders or their functional equivalent.

Joe Jetensky, Manager
HunTel Communications
1605 Washington Street
Blair, NE 68008

ACCESS SERVICE

6. **Switched Access Service** (Cont'd)

6.3 Provisions and Description of Switched Access Service Feature Groups (Cont'd)

6.3.3 Feature Group D (FGD) (Cont'd)

(D) Design and Traffic Routing

For Feature Group D, the Telephone Company shall design and determine the routing of tandem Switched Access Transport service, including the selection of the first point of switching and the selection of facilities from the interface to any switching point and to the end offices where busy hour minutes of capacity are ordered. The Telephone Company shall also decide if capacity is to be provided by originating only, terminating only, or two-way trunk groups. Finally, the Telephone Company will decide whether trunk side access will be provided through the use of two-wire or four-wire trunk terminating equipment.

For Feature Group D Direct Trunked Transport service, the Telephone Company will determine the routing of switched access service from the point of interface to the first point of switching or, if the customer specifies one or more hub locations for multiplexing, from the point of interface to that hub location, from one hub location to another hub location, and/or from a hub location to the first point of switching.

Selection of facilities and equipment and traffic routing of the service are based on standard engineering methods, available facilities and equipment, and actual traffic patterns. The Telephone Company will designate the first point(s) of switching and routing to be used where equal access is provided through a Centralized Equal Access arrangement. Those Telephone Company offices providing equal access through centralized arrangements are identified in NATIONAL EXCHANGE CARRIER ASSOCIATION, INC. TARIFF F.C.C. No. 4.

Joe Jetensky, Manager
HunTel Communications
1605 Washington Street
Blair, NE 68008

ACCESS SERVICE

6. **Switched Access Service** (Cont'd)

6.3 Provisions and Description of Switched Access Service Feature Groups (Cont'd)

6.3.4 Manner of Provision

Switched Access is furnished in either quantities of lines or trunks, or in busy hour minutes of capacity (BHMCs). FGA Access and FGB Access are furnished on a per-line or per-trunk basis respectively. FGD Access is furnished on a BHMC basis and on a per trunk basis as set forth in Section 5.2(C), preceding.

BHMCs are differentiated by type and directionality of traffic carried over a Switched Access Service arrangement. Differentiation of traffic among BHMC types is necessary for the Telephone Company to properly design Switched Access Service to meet the traffic carrying capacity requirement of the customer.

For Feature Groups A and B, which are ordered on a per line or per trunk as is respectively, and Feature Group D when ordered on a per trunk basis, the customer specifies the type of transport facilities and the number of channels in the order for service.

For Tandem Switched Transport, the Telephone Company will determine the number of Switched Access Service transmission paths to be provided for the Switched Access Feature Group D busy hour minutes of capacity ordered. The number of transmission paths will be developed using the total busy hour minutes of capacity by type (as described in Section 5.3(A), preceding) for the end office for each Feature Group ordered from a customer's premises. The total busy hour minutes of capacity by type (e.g., originating, terminating, IDDD, Operator) for the end office will be converted to transmission paths using standard Telephone Company traffic engineering methods. The number of transmission paths provided shall be the number required based on (1) the use of access tandem switches and end office switches, (2) the use of the end office switches only, or (3) the use of the tandem switches only.

ACCESS SERVICE

6. **Switched Access Service** (Cont'd)

6.3 Provisions and Description of Switched Access Service Feature Groups (Cont'd)

6.3.4 Manner of Provisions (Cont'd)

There are two major BHMC categories identified as Originating and Terminating. Originating BHMCs represent access capacity for carrying traffic from the end user to the customer. Terminating BHMCs represent access capacity for carrying traffic from the customer to the end user. When ordering capacity for FGD Access, the customer must at a minimum specify access capacity in terms of Originating BHMCs and/or Terminating BHMCs. Because some customers will wish to further segregate their originating traffic into separate trunk groups, or because segregation may be required by network considerations, Originating BHMCs are further categorized into Domestic, Toll Free Number, Operator and IDDD. Domestic BHMCs represent access capacity for carrying only domestic traffic other than Toll Free Number; IDDD BHMCs represent access capacity for carrying only international traffic; and, Toll Free Number, BHMCs represent access capacity for carrying, respectively, only Toll Free Number traffic. When ordering such types of access capacity, the customer must specify Domestic, Toll Free Number Operator or IDDD BHMCs.

Joe Jetensky, Manager
HunTel Communications
1605 Washington Street
Blair, NE 68008

ACCESS SERVICE

6. **Switched Access Service** (Cont'd)

6.3 Provisions and Description of Switched Access Service Feature Groups (Cont'd)

6.3.5 Common Switching Transport Termination and Translation Optional Features

(A) Optional Features

(1) Common Switching Nonchargeable Optional Features

(a) Call Denial on Line or Hunt Group

This option allows for the screening of terminating Feature Group A calls. There are two screening arrangements available with this option as follows: 1) limiting terminating calls for completion to only 411 or 555-1212 whichever is available, 611, 911, Toll Free Number and a Telephone Company specified set of NXXs within the Telephone Company local exchange calling area of the dial tone office in which the arrangement is provided or, 2) limiting terminating calls to completion to only the NXXs associated with all end offices in the LATA, i.e., the call cannot be further switched or routed out of the LATA nor will calls be completed to 411 or 555-1212 whichever is available, 611, 911 or Toll Free Number. All other calls are routed to a reorder tone or recorded announcement. Arrangement 1 is provided in all Telephone Company electronic end offices and, where available, in electromechanical end offices. Arrangement 2 is provided where available. This feature is available with Feature Group A.

Joe Jetensky, Manager
HunTel Communications
1605 Washington Street
Blair, NE 68008

ACCESS SERVICE

6. **Switched Access Service** (Cont'd)

6.3 Provisions and Description of Switched Access Service Feature Groups (Cont'd)

6.3.5 Common Switching Transport Termination and Translation Optional Features (Cont'd)

(A) Optional Features (Cont'd)

(1) Common Switching Nonchargeable Optional Features (Cont'd)

(b) Service Code Denial on Line or Hunt Group

This option allows for the screening of terminating calls within the LATA, and for disallowing completion of calls to 0-, 555 and N11 (e.g., 411, 611 and 911). This feature is provided where available in all Telephone Company electronic end offices and electromechanical end offices. It is available with Feature Group A.

ACCESS SERVICE

6. **Switched Access Service** (Cont'd)

6.3 Provisions and Description of Switched Access Service Feature Groups (Cont'd)

6.3.5 Common Switching Transport Termination and Translation Optional Features (Cont'd)

(A) Optional Features (Cont'd)

(1) Common Switching Nonchargeable Optional Features (Cont'd)

(c) Hunt Group Arrangement

This option provides the ability to sequentially access one of two or more line side connections in the originating direction, when the access code of the line group is dialed. This feature is provided in all Telephone Company end offices. It is available with Feature Group A. All Feature Group A access services in the same hunt group must provide off-hook supervisory signaling from the same point in time in the call sequence, i.e., all off-hook supervisory signals must either be provided by the customer's equipment before the called party answers or all must be forwarded by the customer's equipment when the called party answers.

(d) Uniform Call Distribution Arrangement

This option provides a type of multiline hunting arrangement which provides for an even distribution of calls among the available lines in hunt group. Where available, this feature is provided in Telephone Company electronic end offices only. It is available with Feature Group A.

Joe Jetensky, Manager
HunTel Communications
1605 Washington Street
Blair, NE 68008

ACCESS SERVICE

6. **Switched Access Service** (Cont'd)

6.3 Provisions and Description of Switched Access Service Feature Groups (Cont'd)

6.3.5 Common Switching Transport Termination and Translation Optional Features (Cont'd)

(A) Optional Features (Cont'd)

(1) Common Switching Nonchargeable Optional Features (Cont'd)

(e) Nonhunting Number for Use with Hunt Group or Uniform Call Distribution Arrangement

This option provides an arrangement for an individual line within a multiline hunt or uniform call distribution group that provides access to that line within the hunt or uniform call distribution group when it is idle or provides busy tone when it is busy, when the non-hunting number is dialed. It is available with Feature Group A.

(f) Automatic Number Identification (ANI)

(1) This option provides the automatic transmission of a seven or ten digit number and information digits to the customer premises for calls originating in the LATA, to identify the calling station. The ANI feature is an end office software function which is associated on a call-by-call basis with all individual transmission

ACCESS SERVICE

6. **Switched Access Service** (Cont'd)

6.3 Provisions and Description of Switched Access Service Feature Groups (Cont'd)

6.3.5 Common Switching Transport Termination and Translation Optional Features (Cont'd)

(A) Optional Features (Cont'd)

(1) Common Switching Nonchargeable Optional Features (Cont'd)

(f) Automatic Number Identification (ANI) (Cont'd)

(1) (Cont'd)

(a) paths in a trunk group routed directly between an end office and a customer premises or, where technically feasible, with

(b) all individual transmission paths in a trunk group between an end office and an access tandem, and a trunk group between an access tandem and a customer premises.

Joe Jetensky, Manager
HunTel Communications
1605 Washington Street
Blair, NE 68008

ACCESS SERVICE

6. **Switched Access Service** (Cont'd)

6.3 Provisions and Description of Switched Access Service Feature Groups (Cont'd)

6.3.5 Common Switching Transport Termination and Translation Optional Features (Cont'd)

(A) Optional Features (Cont'd)

(1) Common Switching Nonchargeable Optional Features (Cont'd)

(f) Automatic Number Identification (ANI) (Cont'd)

(2) The seven-digit ANI telephone number is generally available with Feature Group B. With this Feature Group, technical limitations may exist in Telephone Company switching facilities which require ANI to be provided only on a directly trunked basis. ANI will be transmitted on all calls except those originating from multiparty lines, coin stations and coinless pay telephones using Feature Group B, or when an ANI failure has occurred.

ACCESS SERVICE

6. **Switched Access Service** (Cont'd)

6.3 Provisions and Description of Switched Access Service Feature Groups (Cont'd)

6.3.5 Common Switching Transport Termination and Translation Optional Features (Cont'd)

(A) Optional Features (Cont'd)

(1) Common Switching Nonchargeable Optional Features (Cont'd)

(f) Automatic Number Identification (ANI) (Cont'd)

(3) The ten-digit ANI telephone number is only available with Feature Group D. When a customer orders SS7 Signaling, ANI will be automatically provided where technically feasible. In instances where ANI is unavailable, the customer will automatically receive the Calling Party Number as specified in Section 6.3.5(A)(1)(w), following. The ten-digit ANI telephone number consists of the Numbering Plan Area (NPA) plus the seven-digit ANI telephone number. The ten-digit ANI telephone number will be transmitted on all calls except those identified as multiparty line or ANI failure, in which case only the NPA will be transmitted (in addition to the information digit described below). Seven-digit ANI is not available with SS7 signaling.

ACCESS SERVICE

6. **Switched Access Service** (Cont'd)

6.3 Provisions and Description of Switched Access Service Feature Groups (Cont'd)

6.3.5 Common Switching Transport Termination and Translation Optional Features (Cont'd)

(A) Optional Features (Cont'd)

(1) Common Switching Nonchargeable Optional Features (Cont'd)

(f) Automatic Number Identification (ANI) (Cont'd)

(4) Additional ANI information digits are available with Feature Group D only. They include:

(a) InterLATA restricted - telephone number is identified line
(b) InterLATA restricted - hotel/motel line
(c) InterLATA restricted - coinless, hospital, inmate, etc., line

These information digits will be transmitted as agreed to by the customer and the Telephone Company.

Joe Jetensky, Manager
HunTel Communications
1605 Washington Street
Blair, NE 68008

ACCESS SERVICE

6. **Switched Access Service** (Cont'd)

6.3 Provisions and Description of Switched Access Service Feature Groups (Cont'd)

6.3.5 Common Switching Transport Termination and Translation Optional Features (Cont'd)

(A) Optional Features (Cont'd)

(1) Common Switching Nonchargeable Optional Features (Cont'd)

(f) Automatic Number Identification (ANI) (Cont'd)

(5) Restrictions on Use and Sale of ANI

(a) Interstate access customers of this tariff may use ANI in the following manner:

(i) For billing and collection information, for routing, screening, and completing the originating subscriber's call or transaction, or for services directly related to the originating telephone subscriber's call or transaction.

The customer may use ANI to offer a product or service that is directly related to the products or services previously acquired from the customer by the originating subscriber.

ACCESS SERVICE

6. **Switched Access Service** (Cont'd)

6.3 Provisions and Description of Switched Access Service Feature Groups (Cont'd)

6.3.5 Common Switching Transport Termination and Translation Optional Features (Cont'd)

(A) Optional Features (Cont'd)

(1) Common Switching Nonchargeable Optional Features (Cont'd)

(f) Automatic Number Identification (ANI) (Cont'd)

(5) Restrictions on Use and Sale of ANI (Cont'd)

(b) Interstate access customers of this tariff may not use ANI in the following manner:

(i) Reusing or selling the telephone number or billing information without first notifying the originating telephone subscriber and obtaining the affirmative consent of such subscriber for such reuse or sale.

(ii) Disclosing (except as permitted in (a), preceding), any information derived from the ANI for any purpose other than 1) performing the services or transactions that are the subject of the originating subscriber's call, 2) ensuring network performance security and the effectiveness of call delivery, 3) compiling, using, and disclosing aggregate information, and 4) complying with applicable law or legal process.

Joe Jetensky, Manager
HunTel Communications
1605 Washington Street
Blair, NE 68008

ACCESS SERVICE

6. **Switched Access Service** (Cont'd)

6.3 Provisions and Description of Switched Access Service Feature Groups (Cont'd)

6.3.5 Common Switching Transport Termination and Translation Optional Features (Cont'd)

(A) Optional Features (Cont'd)

(1) Common Switching Nonchargeable Optional Features (Cont'd)

(g) Up to 7 Digit Outpulsing of Access Digits to Customer

This option generally provides for the end office capability of providing up to 7 digits of the uniform access code (950-0XXX, 950-1XXX) to the customer premises. The customer can request that only some of the digits in the access code be forwarded. The access code digits would be provided to the customer premises using multifrequency signaling, and transmission of the digits would precede the forwarding of ANI if that feature were provided. It is available with Feature Group B.

Joe Jetensky, Manager
HunTel Communications
1605 Washington Street
Blair, NE 68008

ACCESS SERVICE

6. **Switched Access Service** (Cont'd)

6.3 Provisions and Description of Switched Access Service Feature Groups (Cont'd)

6.3.5 Common Switching Transport Termination and Translation Optional Features (Cont'd)

(A) Optional Features (Cont'd)

(1) Common Switching Nonchargeable Optional Features (Cont'd)

(h) Service Class Routing

This option provides the capability of directing originating traffic from an end office to a trunk group to a customer premises, based on the line class of service (e.g., coin, multiparty or hotel/motel), service prefix indicator (e.g., 0-, 0+ or 011+, or Service Access Code (e.g., 900)). It is provided in suitably equipped end office or access tandem switches and is available with Feature Group D.

(i) Alternate Traffic Routing

When the customer orders both Direct Trunked Transport and Tandem Switched Transport at the same end office, this option provides the capability of directing originating traffic from an end office (or appropriately equipped access tandem) to a trunk group (the "high usage" group) to a customer premises until that group is fully loaded, and then delivering additional originating traffic (the "overflowing" traffic) from the same end office or access tandem to a different trunk group (the "final" group) to the same or a second customer premises.

ACCESS SERVICE

6. **Switched Access Service** (Cont'd)

6.3 Provisions and Description of Switched Access Service Feature Groups (Cont'd)

6.3.5 Common Switching Transport Termination and Translation Optional Features (Cont'd)

(A) Optional Features (Cont'd)

(1) Common Switching Nonchargeable Optional Features (Cont'd)

(i) Alternate Traffic Routing (Cont'd)

.

The customer shall specify the last trunk CCS desired for the high usage group. It is provided in suitably equipped end office or access tandem switches and is available with Feature Groups B and D.

When alternate routing is available the FGD traffic will be directly measured. If the Telephone Company cannot measure the traffic, it will be estimated based on a 24-hour period representative of actual routing.

Joe Jetensky, Manager
HunTel Communications
1605 Washington Street
Blair, NE 68008

ACCESS SERVICE

6. **Switched Access Service** (Cont'd)

6.3 Provisions and Description of Switched Access Service Feature Groups (Cont'd)

6.3.5 Common Switching Transport Termination and Translation Optional Features (Cont'd)

(A) Optional Features (Cont'd)

(1) Common Switching Nonchargeable Optional Features (Cont'd)

(j) International Carrier Option

This option allows for Feature Group D end offices or access tandem switches equipped for International Direct Distance Dialing to be arranged to forward the international calls of one or more international carriers to the customer (i.e., the Telephone Company is able to route originating international calls to a customer other than the one designated by the end user either through presubscription or 101XXXX dialing). This arrangement requires provision of written verification to the Telephone Company that the customer is authorized to forward such calls. The written verification must be in the form of a letter of agency authorizing the customer to order the option on behalf of the international carrier. This option is only provided at the Telephone Company end offices or access tandems equipped for International Direct Distance Dialing. It is available with Feature Group D.

ACCESS SERVICE

6. **Switched Access Service** (Cont'd)

6.3 Provisions and Description of Switched Access Service Feature Groups (Cont'd)

6.3.5 Common Switching Transport Termination and Translation Optional Features (Cont'd)

(A) Optional Features (Cont'd)

(1) Common Switching Nonchargeable Optional Features (Cont'd)

(k) Band Advance Arrangement for Use with Special Access Service Utilized in the Provision of WATS or WATS-Type Services

This option, which is provided in association with two or more Special Access Service groups, provides for the automatic overflow of terminating calls to a second Special Access Service group, when the first group has exceeded its call capacity. This option is available with Feature Groups A, B and D.

ACCESS SERVICE

6. **Switched Access Service** (Cont'd)

6.3 Provisions and Description of Switched Access Service Feature Groups (Cont'd)

6.3.5 Common Switching Transport Termination and Translation Optional Features (Cont'd)

(A) Optional Features (Cont'd)

(1) Common Switching Nonchargeable Optional Features (Cont'd)

(l) End Office End User Line Service Screening for Use with Special Access Service Utilized in the Provision of WATS or WATS-Type Services

This option provides the ability to verify that an end user has dialed a called party address (by screening the called NPA and/or NXX on the basis of geographical bands selected by the Telephone Company) which is in accordance with that end user's service agreement with the customer, e.g., WATS. This option is provided in all Telephone Company electronic end offices and, where available, in electromechanical end offices which are designated as WATS Serving Offices. It is available with Feature Groups A, B and D.

ACCESS SERVICE

6. **Switched Access Service** (Cont'd)

6.3 Provisions and Description of Switched Access Service Feature Groups (Cont'd)

6.3.5 Common Switching Transport Termination and Translation Optional Features (Cont'd)

(A) Optional Features (Cont'd)

(1) Common Switching Nonchargeable Optional Features (Cont'd)

(m) Hunt Group Arrangement for Use with Special Access Service Utilized in the Provision of WATS or WATS-Type Services

This option provides the ability to sequentially access one of two or more Special Access Services utilized in the provision of WATS or WATS-type services (e.g., 800 Service Special access services) in the terminating direction, when the hunting number of the Special Access Service group is forwarded from the customer to the Telephone Company. This feature is provided in all Telephone Company designated WATS Serving Offices. It is available with Feature Groups A, B and D.

ACCESS SERVICE

6. **Switched Access Service** (Cont'd)

6.3 Provisions and Description of Switched Access Service Feature Groups (Cont'd)

6.3.5 Common Switching Transport Termination and Translation Optional Features (Cont'd)

(A) Optional Features (Cont'd)

(1) Common Switching Nonchargeable Optional Features (Cont'd)

(n) Uniform Call Distribution Arrangement for Use with Special Access Service Utilized in the Provision of WATS or WATS-Type Services

This option provides a type of multiline hunting arrangement which provides for an even distribution of terminating calls among the available Special Access Services utilized in the provision of WATS or WATS-type Services in the hunt group. Where available, this feature is only provided in Telephone Company designated WATS Serving Offices. It is available with Feature Groups A, B and D.

ACCESS SERVICE

6. **Switched Access Service** (Cont'd)

6.3 Provisions and Description of Switched Access Service Feature Groups (Cont'd)

6.3.5 Common Switching Transport Termination and Translation Optional Features (Cont'd)

(A) Optional Features (Cont'd)

(1) Common Switching Nonchargeable Optional Features (Cont'd)

(o) Nonhunting Number for Use with Hunt Group Arrangement or Uniform Call Distribution Arrangement for Use with Special Access Service Utilized in the Provision of WATS or WATS-Type Services

This option provides an arrangement for an individual Special Access Service utilized in the provision of WATS or WATS-type Services within a multiline hunt or uniform call distribution group that provides access to that Special Access Service within the hunt or uniform call distribution group when it is idle or provides busy tone when it is busy, when the nonhunting number is dialed. Where available, this feature is only provided in the Telephone Company designated WATS Serving Offices. It is available with Feature Groups A, B and D.

ACCESS SERVICE

6. **Switched Access Service** (Cont'd)

6.3 Provisions and Description of Switched Access Service Feature Groups (Cont'd)

6.3.5 Common Switching Transport Termination and Translation Optional Features (Cont'd)

(A) Optional Features (Cont'd)

(1) Common Switching Nonchargeable Optional Features (Cont'd)

(p) Multifrequency Address Signaling

Multifrequency Address Signaling is available as an optional feature with FGD. This feature provides for the transmission of number information and control signals (e.g., number address signals, automatic number identification) between the end office switch and the customer's premises (in either direction). Multifrequency signaling arrangements make use of pairs of frequencies out of a group of six frequencies. Specific information transmitted is dependent upon feature group and call type (i.e., POTS, coin or operator). This feature is not available in combination with SS7 signaling.

ACCESS SERVICE

6. **Switched Access Service** (Cont'd)

6.3 Provisions and Description of Switched Access Service Feature Groups (Cont'd)

6.3.5 Common Switching Transport Termination and Translation Optional Features (Cont'd)

(A) Optional Features (Cont'd)

(1) Common Switching Nonchargeable Optional Features (Cont'd)

(q) Signaling System 7 (SS7) Signaling

This feature provides common channel out of band transmission of address and supervisory SS7 protocol signaling information between the end office switch or the tandem office switching system and the customer's premises. This feature is available only in offices where technically feasible as indicated in NATIONAL EXCHANGE CARRIER ASSOCIATION, INC. TARIFF F.C.C. No. 4. The signaling information is transmitted to the Telephone Company designated STP which may be provided by a separate entity. The customer must arrange CCSAC facilities with the entity providing the STP in order to receive SS7 signaling from the Telephone Company. This feature is available with FGD and
will be provided in accordance with the SS7 Interconnect specifications described in Technical Reference TR-TSV-000905.

Joe Jetensky, Manager
HunTel Communications
1605 Washington Street
Blair, NE 68008

ACCESS SERVICE

6. **Switched Access Service** (Cont'd)

6.3 Provisions and Description of Switched Access Service Feature Groups (Cont'd)

6.3.5 Common Switching Transport Termination and Translation Optional Features (Cont'd)

(A) Optional Features (Cont'd)

(1) Common Switching Nonchargeable Optional Features (Cont'd)

(r) Calling Party Number (CPN)

This feature provides for the automatic transmission of the ten-digit directory number, associated with a calling station, to the customer's premises for calls originating in the LATA. The ten-digit telephone number consists of the NPA plus the seven-digit telephone number, which may or may not be the same number as the calling station's charge number. The ten-digit telephone number will be coded as presented, or restricted via a "privacy indicator" for delivery to the called end user. This feature is automatically provided with originating FGD with SS7 signaling. SS7 Signaling is available only where technically feasible.

ACCESS SERVICE

6. **Switched Access Service** (Cont'd)

6.3 Provisions and Description of Switched Access Service Feature Groups (Cont'd)

6.3.5 Common Switching Transport Termination and Translation Optional Features (Cont'd)

(A) Optional Features (Cont'd)

(1) Common Switching Nonchargeable Optional Features (Cont'd)

(s) Calling Party Number (CPN) (Cont'd)

(1) Restrictions on Use and Sale of CPN

(a) Interstate access customers of this tariff may use CPN in the following manner:

(i) For billing and collection information, for routing, screening, and completing the originating subscriber's call or transaction, or for services directly related to the originating telephone subscriber's call or transaction.

The customer may use CPN to offer a product or service that is directly related to the products or services previously acquired from the customer by the originating subscriber.

Joe Jetensky, Manager
HunTel Communications
1605 Washington Street
Blair, NE 68008

ACCESS SERVICE

6. **Switched Access Service** (Cont'd)

6.3 Provisions and Description of Switched Access Service Feature Groups (Cont'd)

6.3.5 Common Switching Transport Termination and Translation Optional Features (Cont'd)

(A) Optional Features (Cont'd)

(1) Common Switching Nonchargeable Optional Features (Cont'd)

(s) Calling Party Number (CPN) (Cont'd)

(1) Restrictions on Use and Sale of CPN (Cont'd)

(b) Interstate access customers of this tariff may not use CPN in the following manner:

(i) Reusing or selling the telephone number or billing information without first notifying the originating telephone subscriber and obtaining the affirmative consent of such subscriber for such reuse or sale.

(ii) Disclosing (except as permitted in (a), preceding) any information derived from the CPN for any purpose other than 1) performing the services or transactions that are the subject of the originating subscriber's call, 2) ensuring network performance security and the effectiveness of call delivery, 3) compiling, using, and disclosing aggregate information, and 4) complying with applicable law or legal process.

ACCESS SERVICE

6. **Switched Access Service** (Cont'd)

6.3 Provisions and Description of Switched Access Service Feature Groups (Cont'd)

6.3.5 Common Switching Transport Termination and Translation Optional Features (Cont'd)

(A) Optional Features (Cont'd)

(1) Common Switching Nonchargeable Optional Features (Cont'd)

(t) Carrier Selection Parameter (CSP) *

This feature provides for the automatic transmission of a signaling indicator which signifies to the customer whether or not the call being processed originated from a presubscribed line. If the line was presubscribed, the indicator will signify if the end user did or did not dial 101XXXX. This feature is provided with originating FGD with SS7 signaling.

* CSP is available only at selected Telephone Company switches.

Joe Jetensky, Manager
HunTel Communications
1605 Washington Street
Blair, NE 68008

ACCESS SERVICE

6. **Switched Access Service** (Cont'd)

6.3 Provisions and Description of Switched Access Service Feature Groups (Cont'd)

6.3.5 Common Switching Transport Termination and Translation Optional Features (Cont'd)

(A) Optional Features (Cont'd)

(1) Common Switching Nonchargeable Optional Features (Cont'd)

(u) Charge Number Parameter (CNP)

(1) The CNP is equivalent to the existing ten digit Automatic Number Identification (ANI) available with FGD with MF signaling. The CNP provides for the automatic transmission of the ten digit billing number of the calling station and the originating line information. This feature is provided with originating FGD with SS7 signaling.

(2) Restrictions on Use and Sale of CNP

(a) Interstate access customers of this tariff may use CNP in the following manner:

(i) For billing and collection information, for routing, screening, and completing the originating subscriber's call or transaction, or for services directly related to the originating telephone subscriber's call or transaction.

The customer may use CNP to offer a product or service that is directly related to the products or services previously acquired from the customer by the originating subscriber.

ACCESS SERVICE

6. **Switched Access Service** (Cont'd)

6.3 Provisions and Description of Switched Access Service Feature Groups (Cont'd)

6.3.5 Common Switching Transport Termination and Translation Optional Features (Cont'd)

(A) Optional Features (Cont'd)

(1) Common Switching Nonchargeable Optional Features (Cont'd)

(u) Charge Number Parameter (CNP) (Cont'd)

(2) Restrictions on Use and Sale of CNP (Cont'd)

(b) Interstate access customers of this tariff may not use CNP in the following manner:

(i) Reusing or selling the telephone number or billing information without first notifying the originating telephone subscriber and obtaining the affirmative consent of such subscriber for such reuse or sale.

(ii) Disclosing, except as permitted in a), preceding, any information derived from the CNP for any purpose other than 1) performing the services or transactions that are the subject of the originating subscriber's call, 2) ensuring network performance security and the effectiveness of call delivery, 3) compiling, using, and disclosing aggregate information, and 4) complying with applicable law or legal process.

Joe Jetensky, Manager
HunTel Communications
1605 Washington Street
Blair, NE 68008

ACCESS SERVICE

6. **Switched Access Service** (Cont'd)

6.3 Provisions and Description of Switched Access Service Feature Groups (Cont'd)

6.3.5 Common Switching Transport Termination and Translation Optional Features (Cont'd)

(A) Optional Features (Cont'd)

(2) Transport Termination Nonchargeable Optional Features

(a) Rotary Dial Station Signaling

This option provides for the transmission of called party address signaling from rotary dial stations to the customer premises for originating calls. This option is provided in the form of a specific type of Transport Termination. It is available with Feature Group B, only on a directly trunked basis.

ACCESS SERVICE

6. **Switched Access Service** (Cont'd)

6.3 Provisions and Description of Switched Access Service Feature Groups (Cont'd)

6.3.5 Common Switching Transport Termination and Translation Optional Features (Cont'd)

(A) Optional Features (Cont'd)

(2) Transport Termination Nonchargeable Optional Features (Cont'd)

(b) Operator Trunk-Full Feature

This option provides the initial coin return control function to the customer's operator. It is available with Feature Group D and is provided as trunk type for Transport Termination. Because it requires inband signaling, this feature is not available with the SS7 Signaling option.

(3) Chargeable Optional Features

(a) Toll Free Number Data Base Access Service

Toll Free Number Data Base Access Service is provided to all customers in conjunction with FGD switched access service. When a 1+Toll Free Number+NXX-XXXX call is originated by an end user, the Telephone Company will utilize the Signaling System 7 (SS7) network to query an Toll Free Number data base to identify the customer to whom the call will be delivered and provide vertical features based on the dialed ten digits. The call will then be routed to the identified customer over FGD switched access.

ACCESS SERVICE

6. **Switched Access Service** (Cont'd)

6.3 Provisions and Description of Switched Access Service Feature Groups (Cont'd)

6.3.5 Common Switching Transport Termination and Translation Optional Features (Cont'd)

(A) Optional Features (Cont'd)

(3) Chargeable Optional Features (Cont'd)

(a) Toll Free Number Data Base Access Service (Cont'd)

A Basic or Vertical Features Query charge, as set forth in Section 12.2.D, following, is assessed for each query launched to the database which identifies the customer to whom the call will be delivered

The Basic Query provides the identification of the customer to whom the call will be delivered and includes area of service routing which allows routing of Toll Free Number calls by telephone companies to different interexchange carriers based on the Local Access Transport Area (LATA) in which the call originates.

Joe Jetensky, Manager
HunTel Communications
1605 Washington Street
Blair, NE 68008

ACCESS SERVICE

6. **Switched Access Service** (Cont'd)

6.3 Provisions and Description of Switched Access Service Feature Groups (Cont'd)

6.3.5 Common Switching Transport Termination and Translation Optional Features (Cont'd)

(A) Optional Features (Cont'd)

(3) Chargeable Optional Features (Cont'd)

(a) Toll Free Number Data Base Access Service (Cont'd)

The Vertical Feature Query provides the same customer identification as the basic query plus vertical features which may include: (1) call validation, (ensuring that calls originate from subscribed service areas); (2) POTS translation of Toll Free Number numbers; (3) alternate POTS translation (which allows subscribers to vary the routing of Toll Free Number calls based on factors such as time of day, place or origination of the call, etc.); and (4) multiple carrier routing (which allows subscribers to route to different carriers based on factors similar to those in (3)).

The manner in which Toll Free Number Data Base Access Service is provided is dependent on the availability of SS7 service at the end office from which the service is provided as outlined following:

ACCESS SERVICE

6. **Switched Access Service** (Cont'd)

6.3 Provisions and Description of Switched Access Service Feature Groups (Cont'd)

6.3.5 Common Switching Transport Termination and Translation Optional Features (Cont'd)

(A) Optional Features (Cont'd)

(3) Chargeable Optional Features (Cont'd)

(a) Toll Free Number Data Base Access Service (Cont'd)

When Toll Free Number Data Base Access Service originates at an end office equipped with Service Switching Point (SSP) capability for querying centralized data bases, all such service will be provisioned from that end office.

When Toll Free Number Data Base Access Service originates at an end office not equipped with SSP customer identification capability, the Toll Free Number call will be delivered to the access tandem on which the end office is homed and which is equipped with the SSP feature to query centralized data bases.

Query charges as set forth in Section 12.2.D, following, are in addition to those charges applicable for Feature Group D switched access service.

ACCESS SERVICE

6. **Switched Access Service** (Cont'd)

6.3 Provisions and Description of Switched Access Service Feature Groups (Cont'd)

6.3.5 Common Switching Transport Termination and Translation Optional Features (Cont'd)

(A) Optional Features (Cont'd)

(3) Chargeable Optional Features (Cont'd)

(b) Flexible Automatic Number Identification (Flex ANI)

Flex ANI is a Common Switching Optional Feature that enhances the existing Automatic Number Identification (ANI) (described in 6.3.5(A)(1)(f) preceding) optional feature by allowing Feature Group D (FGD) customers to receive additional information digits. Flex ANI provides additional values for these information digits over and above the values currently available with ANI and is used to identify additional call types, e.g., calls originating from LEC payphones, competitive payphones, an private virtual networks. Flex ANI can be used to provide Originating Line Screening (OLS) service. OLS service is described in 6.3.5(A)(3)(c).

Flex ANI information digits are two digits in length and are activated through switched software program updates. These codes precede the 10-digit directory number of the calling line and are part of the signaling protocol in equal access end offices. The information digits are outpulsed by the switching system along with the directory number from the originating end office and are sent to the receiving office for billing, routing, or special handling purposes.

Customers who have ANI but do not order Flex ANI, will continue to receive the information digits associated with ANI. Flex ANI digits are assigned by the North American Numbering Plan Administrator. The Telephone Company will make available those information digits that are mutually agreed to by the customer and the Telephone Company.

ACCESS SERVICE

6. **Switched Access Service** (Cont'd)

6.3 Provisions and Description of Switched Access Service Feature Groups (Cont'd)

6.3.5 Common Switching Transport Termination and Translation Optional Features

(A) Optional Features (Cont'd)

(3) Chargeable Optional Features (Cont'd)

(b) Flexible Automatic Number Identification (Flex ANI) (Cont'd)

Flex ANI is available to customers with FGD Switched Access Service equipped with ANI. Flex ANI is available in suitably equipped end offices as identified in NATIONAL EXCHANGE CARRIER ASSOCIATION, INC. TARIFF F.C.C. NO. 4.

A nonrecurring charge, as set forth in 12.5(k), is associated with this optional feature. This nonrecurring charge is assessed by the Telephone company on a per line basis to the end user. This is not applicable to interexchange carriers.

(c) Originating Line Screening (OLS) Service

The Telephone Company will offer OLS Service to aggregators and other customers who obtain local exchange service from the Telephone Company under its general or local exchange tariff. OLS service enables customers to determine whether there are billing restrictions on exchange service lines from which a call originates. OLS service delivers codes on operator assisted calls made form aggregator locations to identify, calls originating from privately owned payphones, and inmate locations, etc.

This charge, set forth in 12.5(k) following, is applied for each exchange service line to which an OLS code is assigned. The customer must specify the number of exchange service lines and each individual telephone number equipped.

Joe Jetensky, Manager
HunTel Communications
1605 Washington Street
Blair, NE 68008

ACCESS SERVICE

6. **Switched Access Service** (Cont'd)

6.4 Transmission

6.4.1 Transmission Specifications

Each Switched Access Service transmission path is provided with standard transmission specifications. There are three different standard specifications (Types A, B and C). The standard for a particular transmission path is dependent on the Feature Group, the Interface Group and whether the service is directly routed or via an access tandem. The available transmission specifications are set forth in Section 11.2.1, following. Data Transmission Parameters are also provided with each Switched Access Service transmission path. The Telephone Company will upon notification by the customer that the data parameters set forth in Sections 11.2.2(A), 11.2.2(B), or 11.2.2(C), following, are not being met, conduct tests independently or in cooperation with the customer, and take any necessary action to insure that the data parameters are met.

The Telephone Company will maintain existing transmission specifications on functioning service configurations installed prior to the effective date of this tariff except that service configurations having performance specifications exceeding the standards listed in this provision will be maintained at performance levels specified in this tariff.

The transmission specifications concerning Switched Access Service are immediate action limits and are set forth in Section 11.2, following. Acceptance limits are set forth in Technical Reference TR-NWT-000335. This Technical Reference also provides the basis for determining Switched Access Service maintenance limits.

ACCESS SERVICE

6. **Switched Access Service** (Cont'd)

6.4 Transmission

6.4.2 Mileage Measurement

The mileage to be used to determine the monthly rate for Local Transport is calculated on airline distances between the end office switch, which may be a Host Office (where the call carried by Local Transport originates or terminates) and the customer's serving wire center, and the airline distance between the Host Office and the Remote Office. When Direct Trunked Transport is ordered between the serving wire center and the end office, mileage is normally measured in one segment from the serving wire center to the end office. When Direct Trunked Transport is ordered between a serving wire center and a tandem and Tandem Switched Transport is ordered between the tandem and the end office, mileage is calculated separately for each segment. For SS7 signaling, the mileage to be used to determine the monthly rate for the Signaling Mileage Facility is calculated on the airline distance between the serving wire center associated with the customer's designated premises (Signaling Point Interface) and the Telephone Company wire center providing the STP Port.

Where applicable, the V&H coordinates method is used to determine mileage. This method is set forth in the NATIONAL EXCHANGE CARRIER ASSOCIATION, INC. TARIFF F.C.C. No. 4 Wire Center Information (V&H coordinates).

Mileage rates are set forth in Section 12 following. To determine the rate to be billed, first compute the airline mileage using the V&H coordinates method. If the calculation results in a fraction of a mile, always round up to the next whole mile before determining the mileage and applying the rates. Then multiply the mileage by the appropriate rate.

ACCESS SERVICE

6. **Switched Access Service** (Cont'd)

6.5 Obligation of the Telephone Company

In addition to the obligations of the Telephone Company as set forth in Section 2., preceding, the Telephone Company has certain other obligations pertaining only to the provision of Switched Access Service. These obligations are as follows:

6.5.1 Network Management

The Telephone Company will administer its network to insure the provision of acceptable service levels to all telecommunications users of the Telephone Company's network services. Generally, service levels are considered acceptable only when both end users and customers are able to establish connections with little or no delay encountered within the Telephone Company network. The Telephone Company maintains the right to apply protective controls, i.e., those actions, such as call gapping, which selectively cancel the completion of traffic, over any traffic carried over its network, including that associated with a customer's Switched Access Service. Generally, such protective measures would only be taken as a result of occurrences such as failure or overload of Telephone Company or customer facilities, natural disasters, mass calling or national security demands. In the event that the protective controls applied by the Telephone Company result in the complete loss of service by the customer, the customer will be granted a Credit Allowance for Service Interruption as set forth in Section 2.4.3, preceding.

6.5.2 Design and Traffic Routing of Switched Access Service

For Feature Group D, the Telephone Company shall design and determine the routing of Switched Access Service. The Telephone Company shall also decide if capacity is to be provided by originating only, terminating only, or two-way trunk groups. The Telephone Company will decide whether trunk side access will be provided through the use of two-wire or four-wire trunk terminating equipment.

Joe Jetensky, Manager
HunTel Communications
1605 Washington Street
Blair, NE 68008

ACCESS SERVICE

6. **Switched Access Service** (Cont'd)

6.5 Obligation of the Telephone Company (Cont'd)

6.5.2 Design and Traffic Routing of Switched Access Service (Cont'd)

Selection of facilities and equipment and traffic routing of the service are based on standard engineering methods, available facilities and equipment, and the Telephone Company traffic routing plans.

The Telephone Company will designate the first point(s) of switching and routing to be used.

For Feature Groups A, B, and D, the line or trunk directionality and traffic routing of the Switched Access Service between the customer's premises and the entry switch are determined by the customer's order for service.

ACCESS SERVICE

6. **Switched Access Service** (Cont'd)

6.5 Obligation of the Telephone Company (Cont'd)

6.5.3 Provision of Service Performance Data

Subject to availability, end-to-end service performance data available to the Telephone Company through its own service evaluation routines may be made available to the customer based on previously arranged intervals and format. These data provide information on overall end-to-end call completion and non-completion performance. These data do not include service performance data which are provided under other tariff sections, e.g., testing service results. The charges for provision of this data will be determined on an individual case basis.

6.5.4 Trunk Group Measurement Reports

Subject to availability, the Telephone Company will make available trunk group data in the form of usage in CCS, peg count and overflow, to the customer based on previously agreed to intervals.

ACCESS SERVICE

6. **Switched Access Service** (Cont'd)

6.5 Obligation of the Telephone Company (Cont'd)

6.5.5 Determination of Number of Transmission Paths

The following applies to Switched Access Voice Transmission paths, and does not apply to signaling connections provided with CCSAC. The number of transmission paths for CCSAC connections will be determined by the Telephone Company.

For Feature Groups A and B, which are ordered on a per line or per trunk basis respectively, and Feature Groups D when ordered on a per trunk basis, the customer specifies the type of transport facilities and the number of channels in the order for service and the Telephone Company then determines the number of transmission paths that will be purchased.

For Tandem Switched Transport, the Telephone Company will determine the number of Switched Access Service transmission paths to be provided for the Switched Access Feature Group D busy hour minutes of capacity ordered. The number of transmission paths will be developed using the total busy hour minutes of capacity by type (as described in Section 6.3.4, preceding) by end office for each Feature Group ordered from a customer's premises. The total busy hour minutes of capacity by type for the end office will be converted to transmission paths using standard Telephone Company traffic engineering methods.

6.5.6 Design Blocking Measurement

The Telephone Company will design the facilities used in the provision of Switched Access Service to meet the blocking probability criteria as set forth in (A) and (B), following.

ACCESS SERVICE

6. **Switched Access Service** (Cont'd)

6.5 Obligation of the Telephone Company (Cont'd)

6.5.6 Design Blocking Measurement (Cont'd)

(A) For Feature Group D, the design blocking objective will be no greater than one percent (.01) between the point of termination at the customer's premises and the end office switch, whether the traffic is directly routed without an alternate route or routed via an access tandem. Standard traffic engineering methods as set forth in reference document Telecommunications Transmission Engineering - Volume 3 - Networks and Services (Chapters 6-7) will be used by the Telephone Company to determine the number of transmission paths requested to achieve this level of blocking.

(B) The Telephone Company will perform routine measurement functions to assure that an adequate number of transmission paths are in service. The Telephone Company will recommend that additional capacity (i.e., busy hour minutes of capacity) be ordered by the customer when additional paths are required to reduce the measured blocking to the designed blocking level. For the capacity ordered, the design blocking objective is assumed to have been met if the routine measurements show that the measured blocking does not exceed the threshold listed in the following tables.

ACCESS SERVICE

6. **Switched Access Service** (Cont'd)

6.5 Obligation of the Telephone Company (Cont'd)

6.5.6 Design Blocking Measurement (Cont'd)

(B) (Cont'd)

(1) For transmission paths carrying only first routed traffic direct between an end office and customer's premises without an alternate route, and for paths carrying only overflow traffic, the measured blocking thresholds are as follows:

Number of Transmission Paths Per Trunk Group	Measured Blocking Thresholds in the Time Consistent Busy Hour for the Number of Measurements Taken Between 8:00 a.m. and 11:00 p.m. Per Trunk Group			
	15-20 Measurements	11-14 Measurements	7-10 Measurements	3-6 Measurements
2	.070	.080	.090	.140
3	.050	.060	.070	.090
4	.050	.060	.070	.080
5-6	.040	.050	.060	.070
7 or more	.030	.035	.040	.060

Joe Jetensky, Manager
HunTel Communications
1605 Washington Street
Blair, NE 68008

ACCESS SERVICE

6. **Switched Access Service** (Cont'd)

6.5 Obligation of the Telephone Company (Cont'd)

6.5.6 Design Blocking Measurement (Cont'd)

(B) (Cont'd)

(2) For transmission paths carrying first routed traffic between an end office and customer's premises via an access tandem, the measured blocking thresholds are as follows:

Number of Transmission Paths Per Trunk Group	Measured Blocking Thresholds in the Time Consistent Busy Hour for the Number of Measurements Taken Between 8:00 a.m. and 11:00 p.m. Per Trunk Group			
	15-20 Measurements	11-14 Measurements	7-10 Measurements	3-6 Measurements
2	.045	.055	.060	.095
3	.035	.040	.045	.060
4	.035	.040	.045	.055
5-6	.025	.035	.040	.045
7 or more	.020	.025	.030	.040

ACCESS SERVICE

6. **Switched Access Service** (Cont'd)

6.6 Obligations of the Customer

In addition to the obligations of the customer set forth in Section 2.3, preceding, the customer has certain specific obligations pertaining to the use of Switched Access Service. These obligations are as follows:

6.6.1 Supervisory Signaling

The customer's facilities shall provide the necessary on-hook, off-hook, answer and disconnect supervision.

6.6.2 Trunk Group Measurement Reports

With the agreement of the customer, trunk group data in the form of usage in CCS, peg count and overflow for its end of all access trunk groups, where technologically feasible, will be made available to the Telephone Company. These data will be used to monitor trunk group utilization and service performance and will be provided based on previously arranged intervals and format.

6.6.3 Call Signaling (N)

Depending on the signaling system used by the customer in its network, the customer's facilities shall transmit the following call signaling information to the Telephone Company on traffic the customer's and users originate which is handed off for termination on the Telephone Company's network.

(A) Signaling System 7 (SS7) Signaling
When the customer uses SS7 signaling, it will transmit the Calling Party Number (CPN) or, if different from the CPN, the Charge Number (CN) information in the SS7 signaling stream.

(B) Multi-Frequency (MF) Signaling
When the customer uses MF signaling, it will transmit the number of the calling party or, if different from the number of the calling party, the Charge Number (CN) information in the MF Automatic Number Identification (ANI) field.

(C) Internet Protocol (IP) Signaling
When the customer uses IP signaling, it will transmit the telephone number of the calling party or, if different from the telephone number, the billing number of the calling party.

(N)

ACCESS SERVICE

6. **Switched Access Service** (Cont'd)

6.7 Rate Regulations

This section contains the specific regulations governing the rates and charges that apply for Switched Access Service.

6.7.1 Application of Rates and Charges

(A) Nonrecurring Charges

Nonrecurring charges apply to each installation of service as a one-time charge. Nonrecurring charges are set forth in Section 12.2(A), following. Changes to existing services other than administrative changes will be treated as a discontinuance of the existing service and an installation of a new service.

(1) Installation of Service

A Local Transport nonrecurring installation charge as set forth in Section 12.2(A)1, following, will be applied at the serving wire center for each Entrance Facility installed. Additionally, an End Office nonrecurring installation charge as set forth in Section 12.2(A)2, following, will be applied at the end office on a per order basis for each Direct Trunked Transport facility, whether voice grade or DS1. A maximum of 24 trunks can be activated on a DS1 facility.

For example, if a customer orders a DS1 Entrance Facility and requests activation of 18 of the available circuits, the customer will be charged one Local Transport High Capacity DS1 Installation nonrecurring charge at the serving wire center and one installation nonrecurring charge. If at a later date the customer requests the activation of three more circuits, the customer will then be charged one installation nonrecurring charge.

ACCESS SERVICE

6. **Switched Access Service** (Cont'd)

6.7 Rate Regulations (Cont'd)

6.7.1 Application of Rates and Charges (Cont'd)

(A) Nonrecurring Charges (Cont'd)

(2) Non-Chargeable Changes

The following administrative changes will be made without charge:

- Change of customer name,
- Change of customer or customer's end user premises address when the change of address is not a result of physical relocation of equipment,
- Change in billing data (name, address, or contact name or telephone number),
- Change of agency authorization,
- Change of customer circuit identification,
- Change of billing account number,
- Change of customer test line number,
- Change of customer or customer's end user contact name or telephone number, and
- Change of jurisdiction.

Joe Jetensky, Manager
HunTel Communications
1605 Washington Street
Blair, NE 68008

ACCESS SERVICE

6. **Switched Access Service** (Cont'd)

6.7 Rate Regulations (Cont'd)

6.7.1 Application of Rates and Charges (Cont'd)

(B) Recurring Charges

Application of recurring charges for a specific customer is dependent upon the type of Entrance Facility, type of transport (e.g., Direct Trunked Transport, Tandem Switched Transport), and the type of Multiplexing.

ACCESS SERVICE

6. **Switched Access Service** (Cont'd)

6.7 Rate Regulations (Cont'd)

6.7.1 Application of Rates and Charges (Cont'd)

(B) Recurring Charges (Cont'd)

(1) FGA Access Within Extended Area Service Area

Where Feature Group A switched access usage is between a Primary Exchange Carrier and a Secondary Exchange Carrier, within the same Extended Area Service calling area, and the Primary and Secondary Exchange Carriers are not the same Telephone Company, the Primary Exchange Carrier will charge the customer according to the revenue sharing agreement as set forth in Section 2.4.5, preceding. The usage to be charged will be determined as set forth following:

ACCESS SERVICE

6. **Switched Access Service** (Cont'd)

6.7 Rate Regulations (Cont'd)

6.7.1 Application of Rates and Charges (Cont'd)

(B) Recurring Charges (Cont'd)

(1) FGA Access Within Extended Area Service Area (Cont'd)

(a) Where end office specific usage data are available, such data will be used to determine the charges.

(b) Where end office specific usage data are not available, the following method will be used to determine the applicable access minutes of use. The total originating and/or terminating usage will be the measured usage at the entry switch (i.e., dial tone office) or the assumed usage as set forth in Section 6.7.4, following.

Originating and/or terminating usage will then be apportioned between the Primary and Secondary Exchange Carriers in the following manner:

(i) For originating usage, develop ratios of the total number of subscriber lines in each secondary exchange to the total number of subscriber lines in the Primary Exchange Carrier's Extended Area Service area served by the dial tone office. Then apply these ratios to the total number of originating access minutes to determine access minutes for each secondary exchange.

Joe Jetensky, Manager
HunTel Communications
1605 Washington Street
Blair, NE 68008

ACCESS SERVICE

6. **Switched Access Service** (Cont'd)

6.7 Rate Regulations (Cont'd)

6.7.1 Application of Rates and Charges (Cont'd)

(B) Recurring Charges (Cont'd)

(1) FGA Access Within Extended Area Service Area (Cont'd)

(b) (Cont'd)

(ii) For terminating usage, develop ratios of the total number of subscriber lines in each secondary exchange to the total number of subscriber lines in the Primary Exchange Carrier's Extended Area Service area served by the dial tone office. Then apply these ratios to the total number of terminating access minutes to determine access minutes for each secondary exchange.

(iii) In those instances where a Secondary Exchange Carrier's exchange is part of two or more primary Exchange Carriers' Extended Area Service areas, the Secondary Exchange Carrier's subscriber line count described above must be apportioned between each Primary Exchange Carrier's Extended Area Service area. This apportionment will be based upon ratios of the subscriber line count of all exchanges other than the Secondary Exchange Carrier's in a Primary Exchange Carrier's Extended Area Service area, of which the Secondary Exchange Carrier's

ACCESS SERVICE

6. **Switched Access Service** (Cont'd)

6.7 Rate Regulations (Cont'd)

6.7.1 Application of Rates and Charges (Cont'd)

(B) Recurring Charges (Cont'd)

(1) FGA Access Within Extended Area Service Area (Cont'd)

(b) (Cont'd)

(iii) (Cont'd)

Exchange is part divided by the subscriber line count of all exchanges other than the Secondary Exchange Carrier in all Primary Exchange Carrier Extended Area Service areas of which the Secondary Exchange Carrier's exchange is a part.

(iv) For purposes of administering this regulation, subscriber lines are defined as exchange service lines, Centrex Lines and Centrex-type lines provided by the telephone companies under local and/or general exchange service tariffs.

ACCESS SERVICE

6. **Switched Access Service** (Cont'd)

6.7 Rate Regulations (Cont'd)

6.7.1 Application of Rates and Charges (Cont'd)

(C) Toll Free Number Data Base Access Service

A Basic Query or a Vertical Feature Query charge applies for each query that is launched to a Toll Free Number Data Base and identifies the customer to whom the call will be delivered. The Query charge applied will depend on the features used in making the data base query. Queries using vertical service features outlined above will be charged the Vertical Feature Query charge. All other queries will be charged the Basic Query charge. Query charges, as set forth in Section 12.2(D), following, will only be applied by those companies whose wire centers are identified as assessing query charges in the NATIONAL EXCHANGE CARRIER ASSOCIATION, INC. TARIFF F.C.C. No. 4.

Joe Jetensky, Manager
HunTel Communications
1605 Washington Street
Blair, NE 68008

ACCESS SERVICE

6. **Switched Access Service** (Cont'd)

6.7 Rate Regulations (Cont'd)

6.7.1 Application of Rates and Charges (Cont'd)

(C) Toll Free Number Data Base Access Service (Cont'd)

When Feature Group D switched access service is used for the provision of Toll Free Number Data Base Access Service and the total minutes of use and/or count of queries can be determined for each customer at a tandem or SSP but can not be determined by individual end office, an allocation method will be utilized to determine minutes of use and/or queries by end office and customer. For each end office a ratio will be developed and applied against the total minutes of use and/or count of queries for a given customer as determined by the tandem or SSP. These ratios will be developed by dividing the unidentified originating Toll Free Number minutes of use at an end office by the total unidentified originating minutes of use in all end offices subtending the tandem or SSP. For example, assume:

- Three end office (EO-1, EO-2, and EO-3) subtend a tandem

  EO-1 measures 2,000 minutes of 800 use
  EO-2 measures 3,000 minutes of 800 use
  EO-3 measures 5,000 minutes of 800 use
  10,000 Total

- The tandem delivers Toll Free Number usage to two customers:

  IC-A has 4,000 minutes of use
  IC-B has 6,000 minutes of use

- The allocation ratio for EO-1 is 20%

  2,000/10,000

ACCESS SERVICE

6. **Switched Access Service** (Cont'd)

6.7 Rate Regulations (Cont'd)

6.7.1 Application of Rates and Charges (Cont'd)

(C) Toll Free Number Data Base Access Service (Cont'd)

- The minutes of use to be billed by EO-1 are
  800 to IC-A (20% X 4,000)
  1,200 to IC-B (20% X 6,000)
  2,000 Total

6.7.2 Minimum Periods

Switched Access Service is provided for a minimum period of one month.

6.7.3 Minimum Monthly Charge

Switched Access Service is subject to a minimum monthly charge. The minimum charge applies for the total capacity provided. The minimum monthly charge is calculated as follows.

For usage rated Local Transport, Local Switching and Directory Assistance Information Surcharge rate elements, the minimum monthly charge is the sum of the charges set forth in Sections 12.2.(B) and 12.2.(C), following, for the measured or assumed usage for the month.

For flat rated Local Transport rate elements, the minimum monthly charge is the sum of the recurring charges set forth in Section 12.2(B), following, prorated to the number of days or major fraction of days based on a 30-day month.

Joe Jetensky, Manager
HunTel Communications
1605 Washington Street
Blair, NE 68008

ACCESS SERVICE

6. **Switched Access Service** (Cont'd)

6.7 Rate Regulations (Cont'd)

6.7.4 Measuring Access Minutes

Customer traffic to end offices will be measured (i.e., recorded or assumed) by the Telephone Company. Originating and terminating calls will be measured (i.e., recorded or assumed) by the Telephone Company to determine the basis for computing chargeable access minutes. In the event customer message detail is not available because the Telephone Company lost or damaged tapes or incurred recording system outages, the Telephone Company will compute chargeable access minutes by estimating the volume of lost customer messages based on previously known values. This estimated customer message volume will be provided to the customer. For terminating calls over FGA, FGB, and FGD, and for originating calls over FGA (when the off-hook supervisory signal is provided by the customer's equipment before the called party answers) and FGB, and FGD, the measured minutes are the chargeable access minutes. For originating calls over FGA (when the off-hook supervisory signal is forwarded by the customer's equipment when the called party answers), chargeable originating access minutes are derived from recorded minutes in the following manner.

Step 1: Obtain recorded originating minutes and messages (measured as set forth in (C), following, for FGA), when the off-hook supervisory signal is forwarded by the customer's equipment when the called party answers.

Step 2: Obtain the total attempts by dividing the originating measured messages by the completion ratio. Completion ratios (CR) are obtained separately for the major call categories such as DDD, operator, Toll Free Number, directory assistance and international from a sample study which analyzes the ultimate completion status of the total attempts which receive acknowledgment from the customer. That is, Measured Messages divided by Completion Ratio equals Total Attempts.

ACCESS SERVICE

6. **Switched Access Service** (Cont'd)

6.7 Rate Regulations (Cont'd)

6.7.4 Measuring Access Minutes (Cont'd)

Step 3: Obtain the total non-conversation time additive (NCTA) by multiplying the total attempts (obtained in Step 2) by the NCTA per attempt ratio. The NCTA per attempt ratio is obtained from the sample study identified in Step 2 by measuring the non-conversation time associated with both completed and incompleted attempts. The total NCTA is the time on a completed attempt from customer acknowledgment of receipt of call to called party answer (set up and ringing) plus the time on an incompleted attempt from customer acknowledgment of call until the access tandem or end office receives a disconnect signal (ring - no answer, busy or network blockage). That is, Total Attempts times Non-Conversation Time per Attempt Ratio equals Total NCTA.

Step 4: Obtain total chargeable originating access minutes by adding the total NCTA (obtained in Step 3) to the recorded originating measured minutes (obtained in Step 1). That is, Measured Minutes plus NCTA equals Chargeable Originating Access Minutes.

Joe Jetensky, Manager
HunTel Communications
1605 Washington Street
Blair, NE 68008

ACCESS SERVICE

6. **Switched Access Service** (Cont'd)

6.7 Rate Regulations (Cont'd)

6.7.4 Measuring Access Minutes (Cont'd)

Following is an example which illustrates how the chargeable originating access minutes are derived from the measured originating minutes using this formula.

Where:	Measured Minutes (M. Min.)	= 7,000
	Measured Messages (M. Mes.)	= 1,000
	Completion Ratio (CR)	= .75
	NCTA per Attempt	= .4

(1) Total Attempts = 1,000 (M. Mes.) / .75 (CR) = 1,333.33

(2) Total NCTA = .4 (NCTA per Attempt) x 1,333.33 = 533.33

(3) Total Chargeable Originating Access Minutes
= 7,000 (M. Min.) + 533.33 (NCTA) = 7,533.33

Usage rated FGA, FGB, and FGD access minutes are accumulated over the billing period for each end office. When the calculation of access minutes results in a fraction, the fraction will be rounded up to the nearest access minute for each end office.

Assumed minutes are used for FGA services which originate or terminate in end offices not equipped with measurement capabilities.

The assumed average access minutes used for services originating or terminating in offices where measurement capability does not exist are set forth in (B), following.

Joe Jetensky, Manager
HunTel Communications
1605 Washington Street
Blair, NE 68008

ACCESS SERVICE

6. **Switched Access Service** (Cont'd)

6.7 Rate Regulations (Cont'd)

6.7.4 Measuring Access Minutes (Cont'd)

(A) Where originating and terminating measurement capability does not exist for Feature Group A provided to an entry switch, the number of access minutes will be assumed to be 3,080 access minutes per line per month when the line is arranged for two-way calling (1,629 originating and 1,451 terminating).

Where measurement capability exists for either originating or terminating usage, but not both, on a line arranged for two way calling, the number of access minutes per line per month will be an assumed 3,080 or the measured usage, whichever is greater. If the usage in the measured direction exceeds 3,080 access minutes per line per month, it will be assumed that there is zero usage in the unmeasured direction. If the measured usage is less than 3,080 access minutes per line per month, the usage in the unmeasured direction will be the assumed usage for that unmeasured direction; the total of measured and assumed minutes not to exceed the total assumed usage of 3,080 access minutes designated for two-way calling. If the total exceeds 3,080 access minutes the assumed minutes shall be reduced so that the total of measured and unmeasured minutes equals 3,080 access minutes.

Additionally, when the line is arranged for one-way calling and there is no measurement capability for that direction, 1,629 access minutes per month will be assumed for originating calling only lines and 1,451 access minutes per month will be assumed for terminating calling only lines.

Joe Jetensky, Manager
HunTel Communications
1605 Washington Street
Blair, NE 68008

ACCESS SERVICE

6. **Switched Access Service** (Cont'd)

6.7 Rate Regulations (Cont'd)

6.7.4 Measuring Access Minutes (Cont'd)

(A) (Cont'd)

Notwithstanding the preceding, when Feature Group A is used for the provision of WATS-type service where measurement capability exists at the WATS Serving Office but not at the Feature Group A entry switch, the measured WATS-type originating and/or terminating minutes of use shall be separately summed and compared to their respective total assumed originating and/or terminating minutes of use. The number of access minutes per line per month will be the assumed or the measured usage, whichever is greater.

(B) Where originating and terminating measurement capability does not exist for Feature Group B provided to an entry switch, the number of access minutes will be assumed to be 9,000 access minutes per trunk per month when the trunk is arranged for two way calling.

Where measurement capability exists for either originating or terminating usage, but not both, on a trunk arranged for two way calling, the number of access minutes per trunk per month will be an assumed 9,000 or the measured usage, whichever is greater. If the usage in the measured direction exceeds 9,000 access minutes per trunk per month, it will be assumed that there is zero usage in the unmeasured direction. If the measured usage is less than 9,000 access minutes per trunk per month, the usage in the unmeasured direction will be the assumed usage for that unmeasured direction; (the total of measured and assumed minutes not to exceed the total assumed usage of 9,000 access minutes designated for two-way calling.) If the total exceeds 9,000 access minutes the assumed minutes shall be reduced so that the total of measured and unmeasured minutes equals 9,000 access minutes.

Joe Jetensky, Manager
HunTel Communications
1605 Washington Street
Blair, NE 68008

ACCESS SERVICE

6. **Switched Access Service** (Cont'd)

6.7 Rate Regulations (Cont'd)

6.7.4 Measuring Access Minutes (Cont'd)

(B) (Cont'd)

Additionally, when the trunk is arranged for one-way calling and there is no measurement capability for that direction, 4,500 access minutes per month will be assumed for originating calling only lines and 4,500 access minutes per month will be assumed for terminating calling only lines.

Notwithstanding the preceding, when Feature Group B is used for the provision of WATS or WATS-type service where measurement capability exists at the WATS Serving Office but not at the Feature Group B entry switch, the measured WATS or WATS-type originating and/or terminating minutes of use shall be separately summed and compared to their respective total assumed originating and/or terminating minutes of use. The number of minutes per trunk per month will be the assumed or the measured usage, whichever is greater.

Joe Jetensky, Manager
HunTel Communications
1605 Washington Street
Blair, NE 68008

ACCESS SERVICE

6. **Switched Access Service** (Cont'd)

6.7 Rate Regulations (Cont'd)

6.7.4 Measuring Access Minutes (Cont'd)

(C) Feature Group A Usage Measurement

For originating calls over FGA, usage measurement begins when the originating FGA entry switch receives an off-hook supervisory signal forwarded from the customer's point of termination. This off-hook signal may be provided by the customer's equipment before the called party answers, or forwarded by the customer's equipment when the called party answers.

The measurement of originating call usage over FGA ends when the originating FGA entry switch receives an on-hook supervisory signal from either the originating end user's end office, indicating the originating end user has disconnected, or the customer's point of termination, whichever is recognized first by the entry switch.

Joe Jetensky, Manager
HunTel Communications
1605 Washington Street
Blair, NE 68008

ACCESS SERVICE

6. **Switched Access Service** (Cont'd)

6.7 Rate Regulations (Cont'd)

6.7.4 Measuring Access Minutes (Cont'd)

(C) Feature Group A Usage Measurement (Cont'd)

For terminating calls over FGA, usage measurement begins when the terminating FGA entry switch receives an off-hook supervisory signal from the terminating end user's end office, indicating the terminating end user has answered. The measurement of terminating call usage over FGA ends when the terminating FGA entry switch receives an on-hook supervisory signal from either the terminating end user's end office, indicating the terminating end user has disconnected, or the customer's point of termination, whichever is recognized first by the entry switch.

(D) Feature Group B Usage Measurement

For originating calls over FGB, usage measurement begins when the originating FGB entry switch receives answer supervision forwarded from the customer's point of termination, indicating the customer's equipment has answered.

The measurement of originating call usage over FGB ends when the originating FGB entry switch receives disconnect supervision from either the originating end user's end office, indicating the originating end user has disconnected, or the customer's point of termination, whichever is recognized first by the entry switch.

For terminating calls over FGB, usage measurement begins when the terminating FGB entry switch receives answer supervision from the terminating end user's end office, indicating the terminating end user has answered.

Joe Jetensky, Manager
HunTel Communications
1605 Washington Street
Blair, NE 68008

ACCESS SERVICE

6. **Switched Access Service** (Cont'd)

6.7 Rate Regulations (Cont'd)

6.7.4 Measuring Access Minutes (Cont'd)

(D) Feature Group B Usage Measurement (Cont'd)

The measurement of terminating call usage over FGB ends when the terminating FGB entry switch receives disconnect supervision from either the terminating end user's end office, indicating the terminating end user has disconnected, or the customer's point of termination, whichever is recognized first by the entry switch.

Joe Jetensky, Manager
HunTel Communications
1605 Washington Street
Blair, NE 68008

ACCESS SERVICE

6. **Switched Access Service** (Cont'd)

6.7 Rate Regulations (Cont'd)

6.7.4 Measuring Access Minutes (Cont'd)

(E) Feature Group D Usage Measurement

(1) Originating Usage

For originating calls over FGD the measured minutes are the chargeable access minutes.

For originating calls over FGD, provided with Multifrequency Signaling, usage measurement begins when the originating FGD first point of switching receives the first wink supervisory signal forwarded from the customer's point of termination.

Joe Jetensky, Manager
HunTel Communications
1605 Washington Street
Blair, NE 68008

ACCESS SERVICE

6. **Switched Access Service** (Cont'd)

6.7 Rate Regulations (Cont'd)

6.7.4 Measuring Access Minutes (Cont'd)

(E) Feature Group D Usage Measurement (Cont'd)

(1) Originating Usage (Cont'd)

For originating calls over FGD provided with Signaling System 7 (SS7) Signaling when the FGD end office is not routed through an access tandem for connection to the customer, usage measurement begins when the SS7 Initial Address Message is sent from the Service Switching Point (SSP) to the service transfer Point (STP).

For originating calls over FGD provided with Signaling System 7 (SS7) Signaling when the FGD end office is routed through a tandem for connection to the customer, usage measurement begins when the FGD end office receives the SS7 Exit Message from the tandem.

The measurement of originating call usage over FGD provided with Multifrequency Signaling ends when the originating FGD first point of switching receives disconnect supervision from either the originating end user's end office, indicating the originating end user has disconnected, or the customer's point of termination, whichever is recognized first by the first point of switch.

The measurement of originating call usage over FGD provided with SS7 Signaling ends when the originating FGD end office receives an SS7 Release Message indicating either the originating or terminating end user has disconnected.

Joe Jetensky, Manager
HunTel Communications
1605 Washington Street
Blair, NE 68008

ACCESS SERVICE

6. **Switched Access Service** (Cont'd)

6.7 Rate Regulations (Cont'd)

6.7.4 Measuring Access Minutes (Cont'd)

(E) Feature Group D Usage Measurement (Cont'd)

(2) Terminating Usage

For terminating calls over FGD the chargeable access minutes are either measured or derived.

For terminating calls over FGD provided with Multifrequency Signaling, where measurement capability exits, the measurement of chargeable access minutes begins when the terminating FGD first point of switching receives answer supervision from the terminating end user's end office, indicating the terminating end user has answered. This measurement ends when the terminating FGD first point of switching receives disconnect supervision from either the terminating end user's end office, indicating the terminating end user has disconnected, or the customer's point of termination, whichever is recognized first by the first point of switching.

For terminating calls over FGD, where measurement capability does not exist, terminating FGD usage is derived from originating usage, excluding usage from calls to closed end services or Directory Assistance Service.

For terminating calls over FGD with SS7 Signaling, usage measurement begins when the terminating recording switch receives answer supervision from the terminating end user. The Telephone Company switch receives answer supervision and sends the indication to the customer in the form of an answer message. The measurement of terminating FGD call usage ends when the entry switch receives or sends a release message, whichever occurs first.

ACCESS SERVICE

7. Special Access Service

7.1 General

Special Access Service provides a transmission path to connect two or more customer premises* when all premises can be connected with facilities provided by the Telephone Company. If only a portion of the facilities can be provided by the Telephone Company, Special Access Service provides the transmission path necessary to connect customer premises in the Telephone Company's serving area with the interconnection point with another exchange telephone company. Special Access Service includes all exchange access not utilizing Telephone Company end office switches.

7.1.1 Rate Elements

There are three basic rate categories which may apply to a Special Access Service in addition to the Special Access Surcharge described in Section 7.4.4, following.

(A) Channel Termination

The Channel Termination provides for the communication path between a customer premises and the serving wire center of that premises. One Channel Termination charge applies per customer premises, located in the serving area of the Telephone Company, at which the channel is terminated. This charge will apply even if the customer premises and the serving wire center are co-located in a Telephone Company building. The rates for Channel Termination are set forth in Sections 12.3(A)(1), 12.3(B)(1), and 12.3(C)(1), following.

Channel Termination is the only Special Access rate element to have both a recurring and nonrecurring charge applied. All other rate elements for Special Access have only recurring charges.

* Telephone Company Centrex CO and CO-like switches and packet switches included in the Public Packet Switching Network (PPSN) are considered to be customer premises for purposes of this tariff.

Joe Jetensky, Manager
HunTel Communications
1605 Washington Street
Blair, NE 68008

ACCESS SERVICE

7. **Special Access Service** (Cont'd)

7.1 General (Cont'd)

7.1.1 Rate Elements (Cont'd)

(B) Channel Mileage

The Channel Mileage rate category provides for the end office equipment and the transmission facilities between the serving wire centers associated with two customer premises, between a serving wire center associated with a customer premises and a Telephone Company hub, between two Telephone Company hubs, or between a serving wire center associated with a customer premises and the WATS serving office. Channel Mileage rates are made up of the Channel Mileage Facility rate and the Channel Mileage Termination rate.

(1) Channel Mileage Facility

The Channel Mileage Facility rate recovers the cost for the transmission path which extends between the Telephone Company serving wire centers and/or hub(s) and includes primarily outside plant used to provide the facility. Rates for Channel Mileage Facility are set forth in Sections 12.3(A)(2), 12.3(B)(2), and 12.3(C)(2), following.

Joe Jetensky, Manager
HunTel Communications
1605 Washington Street
Blair, NE 68008

ACCESS SERVICE

7. **Special Access Service** (Cont'd)

7.1 General (Cont'd)

7.1.1 Rate Elements (Cont'd)

(B) Channel Mileage (Cont'd)

(2) Channel Mileage Termination

The Channel Mileage Termination rate recovers the cost for end office equipment associated with terminating the facility (i.e., basic circuit equipment and terminations at serving wire centers and hubs), including circuit equipment. The Channel Mileage Termination rate will apply at the serving wire center(s) for each customer premises and Telephone Company hub where the channel is terminated. If the Channel Mileage is between Telephone Company bridging hubs, the Channel Mileage Termination rate will apply per Telephone Company designated hub. Rates for Channel Mileage Termination are set forth in Sections 12.3(A)(3), 12.3(B)(3), and 12.3(C)(3), following.

Joe Jetensky, Manager
HunTel Communications
1605 Washington Street
Blair, NE 68008

ACCESS SERVICE

7. **Special Access Service** (Cont'd)

7.1 General (Cont'd)

7.1.1 Rate Elements (Cont'd)

(C) Optional Features and Functions

Optional features and functions may be added to a Special Access Service to meet specific communications requirements. These are not necessarily identifiable with specific equipment, but rather represent the end result in terms of performance characteristics which may be obtained. These characteristics may be obtained by using various combinations of equipment installed at various locations along the path of the service. Bridging and multiplexing are Optional Feature and Functions which must be performed at a Telephone Company hub office as described in Section 7.1.6, following.

Joe Jetensky, Manager
HunTel Communications
1605 Washington Street
Blair, NE 68008

ACCESS SERVICE

7. **Special Access Service** (Cont'd)

7.1 General (Cont'd)

7.1.2 Design Layout Report

At the request of the customer, the Telephone Company will provide to the customer the make-up of the facilities and services provided under this tariff as Special Access Service to aid the customer in designing its overall service. This information will be provided in the form of a Design Layout Report. The Design Layout Report will be provided to the customer at no charge, and will be reissued or updated whenever the facilities are materially changed.

7.1.3 Acceptance Testing

At no additional charge, the Telephone Company will, at the customer's request, cooperatively test at the time of installation the following parameters:

(A) For Voice Grade analog services, acceptance tests will include tests for loss, 3-tone slope, DC continuity, operational signaling, C-notched noise, and C-message noise when these parameters are applicable and specified in the order for service. Additionally, for Voice Grade services, a balance (improved loss) test will be made if the customer has ordered the improved loss optional feature.

(B) For Digital Data and High Capacity service, acceptance tests will include tests for the parameters applicable to the service as specified by the customer in the order for service.

In addition to the above tests, Additional Cooperative Acceptance Testing for Voice Grade service to test other parameters is available at the customer's request. All test results will be made available to the customer upon request. The rates described in Section 12.5(B), following, for Additional Labor will apply when additional tests are performed.

ACCESS SERVICE

7. **Special Access Service** (Cont'd)

7.1 General (Cont'd)

7.1.4 Service Descriptions

For the purposes of ordering, there are three categories of Special Access Service. These are Voice (VG), Digital Data (DA), and High Capacity (HC).

Each service consists of a basic channel to which a technical specifications package (customized or predefined), channel interface(s) and, when desired, optional features and functions are added to construct the service desired by the customer. Technical specifications packages are described in this section. Channel interfaces are nonchargeable features of a Special Access Service and are described in Section 11.3, following.

Customized technical specifications packages will be provided where technically feasible. If the Telephone Company determines that the requested parameter specifications are not compatible, the customer will be advised and given the opportunity to change the order.

When a customized channel is ordered the customer will be notified whether Additional Engineering Charges apply. In such cases, the customer will be given an estimate of the hours to be billed before any further action is taken on the order.

The channel description specifies the characteristics of the basic channel and indicates whether the channel is provided between customer premises, between a customer premises and a Telephone Company hub where bridging or multiplexing functions are performed, or, between a customer premises and the WATS serving office.

ACCESS SERVICE

7. **Special Access Service** (Cont'd)

7.1 General (Cont'd)

7.1.4 Service Descriptions (Cont'd)

(A) Information pertaining to the technical specifications package described in Section 7.2, following, indicates the transmission parameters that are available with each package. This information is displayed in a matrix with the transmission parameters listed down the left side and the packages listed across the top. Each package is identified by a code, e.g., VGC. The first two letters of the code indicate the category of Special Access Service to which the parameters are applicable. These two letter codes are shown above in parentheses following the category of Special Access Service. The letter "C" following the two-letter code indicates the technical specifications package for a customized service. A numeric or alphanumeric designation following the two-letter code indicates the specific predefined package. For a customized service, the customer may select any parameters available with that category of service as long as the parameters are compatible. When appropriate, the Technical Reference which contains detailed specifications for the parameters is shown following the matrix.

(B) Channel interfaces at each Point of Termination on a two-point service may be symmetrical or asymmetrical. On a multipoint service they may also by symmetrical or asymmetrical, but communications can only be provided between compatible channel interfaces. Only certain channel interfaces are compatible. These are set forth in Section 11.3.5, following, in a combination format.

Joe Jetensky, Manager
HunTel Communications
1605 Washington Street
Blair, NE 68008

ACCESS SERVICE

7. **Special Access Service** (Cont'd)

7.1 General (Cont'd)

7.1.4 Service Descriptions (Cont'd)

(C) Only certain channel interface combinations are available with the predefined technical specification packages. These are delineated in the Technical References set forth in Section 7.1.4(E), following. When a customized channel is requested, all channel interface combinations available with the specified type of service are available with the customized channel.

(D) The Telephone Company will maintain existing transmission specifications on services installed prior to the effective date of this tariff, except that existing services with performance specifications exceeding the standards listed in the provision will be maintained at the performance levels specified in this tariff.

(E) All services installed after the effective date of this tariff will conform to the transmission specification standards contained in this tariff or in the following Technical References for each category of service:

Voice Grade	TR-TSY-000335 PUB 41004, Table 4
High Capacity	GR-342-CORE, Issue 1 PUB 62411
Digital Data	TR-NWT-000341 and associated Addendum PUB 62310

ACCESS SERVICE

7. Special Access Service (Cont'd)

7.1 General (Cont'd)

7.1.5 Ordering Options and Conditions

Special Access Service is ordered under the Access Order provisions set forth in Section 5., preceding. Also included in that section are other charges which may be associated with ordering Special Access Service (e.g., Service Date Change Charges, Cancellation Charges, etc.).

7.1.6 Facility Hubs

A hub is a Telephone Company designated serving wire center at which bridging or multiplexing functions are performed. The bridging functions performed are to connect three or more customer premises in a multipoint arrangement. The multiplexing functions are to channelize analog or digital facilities to individual services requiring a lower capacity or bandwidth. NATIONAL EXCHANGE CARRIER ASSOCIATION, INC. TARIFF F.C.C. No. 4 identifies serving wire centers, hub locations and the type of bridging or multiplexing functions available.

Joe Jetensky, Manager
HunTel Communications
1605 Washington Street
Blair, NE 68008

ACCESS SERVICE

7. **Special Access Service** (Cont'd)

7.2 Channel Types and Service Descriptions

There are five basic types of channels used to provide Special Access Services. Each type has its own characteristics. All are subdivided by one or more of the following:

- Transmission specifications,
- Bandwidth,
- Speed (i.e., bit rate),
- Spectrum

Customers can order a basic channel and select from a list of available transmission parameters and channel interfaces those that they desire to meet specific communications requirements.

For purposes of ordering channels, each has been identified as a type of Special Access Service. However, such identification is not intended to limit a customer's use of the channel or to imply that the channel is limited to a particular use.

7.2.1 Voice Grade Service Channel Description

A Voice Grade channel is a channel which provides voice frequency transmission capability in the nominal frequency range of 300 to 3,000 Hz and may be terminated two-wire or four-wire. Voice Grade channels are provided between customer premises, between a customer premises and a Telephone Company hub, or between a customer premises and a WATS serving office.

ACCESS SERVICE

7. **Special Access Service** (Cont'd)

7.2 Channel Types and Service Descriptions (Cont'd)

7.2.1 Voice Grade Service Channel Description (Cont'd)

(A) Technical Specifications Package

	Package VG												
Parameter	C*	1	2	3	4	5	6	7	8	9	10	11	12
Attenuation Distortion	X	X	X	X	X	X	X	X	X	X	X	X	X
C-Conditioning	X					X	X	X	X	X	X		
C-Message Noise	X	X	X	X	X	X	X	X	X	X	X	X	X
Data Capability	X						X	X			X		
Echo Control	X	X	X	X		X		X	X			X	X
Envelope Delay Distortion	X						X	X	X	X	X	X	X
Frequency Shift	X						X	X	X	X	X	X	X
Impulse Noise	X					X	X	X	X	X	X	X	X
Intermodulation Distortion	X						X	X	X	X	X	X	
Loss Deviation	X	X	X	X	X	X	X	X	X	X	X	X	X
Phase Hits, Gain Hits, and Dropouts	X												
Phase Jitter	X						X	X	X	X	X	X	
Signal-to-C Message Noise					X								
Signal-to-C Notch Noise	X					X	X	X	X	X	X	X	X

*The desired parameters are selected by the customer from the list of available parameters.

The technical specification for these parameters (except for dropouts, gain hits, and phase hits) are delineated in Technical References TR-NPL-000336 and TR-TSY-000335. The technical specifications for dropouts, phase hits, and gain hits are delineated in Technical Reference PUB 41004, Table 4.

Joe Jetensky, Manager
HunTel Communications
1605 Washington Street
Blair, NE 68008

ACCESS SERVICE

7. **Special Access Service** (Cont'd)

7.2 Channel Types and Service Descriptions (Cont'd)

7.2.1 Voice Grade Service Channel Description (Cont'd)

(B) Channel Interfaces

The following channel interfaces for Voice Grade service do not require signaling capability: AH, DA, DB, DD, DE, DS, NO, PR and TF.

The following channel interfaces for Voice Grade service require signaling capability: AB, AC, CT, DX, DY, EA, EB, EC, EX, GO, GS, LA, LB, LC, LO, LR, LS, RV and SF.

Compatible channel interfaces are set forth in Section 11.3.5(B), following.

(C) Optional Features and Functions

(1) Conditioning

Conditioning provides more specific transmission characteristics for Voice Grade services. C Type Conditioning controls Attenuation Distortion and Envelope Delay Distortion. The rates for Conditioning options are as set forth in Section 12.3(A)(4)(a), following.

For two-point services, the parameters apply to each service. For multipoint services, the parameters apply to each mid-link or end-link.

(a) C-Type Conditioning

C-Type Conditioning is provided for the additional control of attenuation distortion and envelope delay distortion on data services. The attenuation distortion and envelope delay distortion specifications for C-Type Conditioning are delineated in Technical Reference TR-TSY-000335.

Joe Jetensky, Manager
HunTel Communications
1605 Washington Street
Blair, NE 68008

ACCESS SERVICE

7. **Special Access Service** (Cont'd)

7.2 Channel Types and Service Descriptions (Cont'd)

7.2.1 Voice Grade Service Channel Description (Cont'd)

(C) Optional Features and Functions (Cont'd)

(1) Conditioning (Cont'd)

(a) C-Type Conditioning (Cont'd)

The attenuation distortion and envelope delay distortion specifications for C-Type Conditioning are:

Attenuation Distortion
(Frequency Response)
Relative to 1004 Hz

Frequency Range (Hz)	Variation (dB)
400-2800	-1.0 to +2.0
300-3000	-1.0 to +3.0
3000-3200	-2.0 to +6.0

Envelope Delay
Distortion

Frequency Range (Hz)	Variation (micro-seconds)
1000-2600	100
800-2600	200
600-2600	300
500-2800	600
500-3000	3000

ACCESS SERVICE

7. **Special Access Service** (Cont'd)

7.2 Channel Types and Service Descriptions (Cont'd)

7.2.1 Voice Grade Service Channel Description (Cont'd)

(C) Optional Features and Functions (Cont'd)

(1) Conditioning (Cont'd)

(b) Data Capability (D Conditioning)

Data Capability provides transmission characteristics suitable for data communications. Specifically, Data Capability provides for the control of Signal to C-Notched Noise Ratio and intermodulation distortion. It is available for two-point services or three-point multipoint services.

The Signal to C-Notched Noise Ratio and intermodulation distortion parameter for Data Capability are delineated in Technical Reference TR-TSY-000335.

When a service equipped with Data Capability is used for voice communications, the quality of the voice transmission may not be satisfactory.

(2) Bridging

(a) Voice Bridging (two- and four-wire)
(b) Data Bridging (two- and four-wire)

Joe Jetensky, Manager
HunTel Communications
1605 Washington Street
Blair, NE 68008

ACCESS SERVICE

7. **Special Access Service** (Cont'd)

7.2 Channel Types and Services Descriptions (Cont'd)

7.2.2 Digital Data Service

A Digital Data channel is a channel for duplex four-wire transmission of synchronous serial data at the rate of 2.4, 4.8, 9.6, 19.2, 56 Kbps, and 64 Kbps Clear Channel (CC). The actual bit rate is a function of the channel interface selected by the customer. The channel provides a synchronous service with timing provided by the Telephone Company through the Telephone Company's facilities to the customer in the received bit stream. Digital Data channels are only available via Telephone Company designated hubs and are provided between customer premises and a Telephone Company hub or hubs.

The customer may provide the Channel Service Unit-type equipment or other Network Channel Terminating Equipment associated with the Digital Data channel at the customer premises.

Rates and charges for Special Access Digital Data Service are as set forth in Section 12.3.(B), following.

(A) Technical Specifications Packages and Network Channel Interfaces

(1) The following network channel interfaces (NCIs) define the bit rates that are available for a Digital Data channel:

NCI	Bit Rate
PU-2.4	2.4 Kbps
PU-4.8	4.8 Kbps
PU-9.6	9.6 Kbps
PU-19.2	19.2 Kbps
PU-56	56.0 Kbps
PU-64	64.0 Kbps

Joe Jetensky, Manager
HunTel Communications
1605 Washington Street
Blair, NE 68008

ACCESS SERVICE

7. **Special Access Service** (Cont'd)

7.2 Channel Types and Services Descriptions (Cont'd)

7.2.2 Digital Data Service (Cont'd)

(A) Technical Specifications and Network Channel Interfaces (Cont'd)

(2) Technical Specifications Packages are set forth below:

		Package			
	SD Code	D1	D2	D3	D4
	NC Code	XA	XB	XG	XH
Parameter					
Error-Free Seconds		X	X	X	X
Optional Features and Functions					
Central Office Bridging Capability		X	X	X	X
PPSN Interface Transfer Arrangement		X	X	X	X
Transfer Arrangement		X	X	X	X

The Telephone Company will provide a channel capable of meeting a monthly average performance equal to or greater than 99.875% error-free seconds (if provided through a Digital Data hub) while the channel is in service, if it is measured through a CSU equivalent which is designed, manufactured, and maintained to conform with the specifications contained in Technical Reference PUB 62310.

Voltages which are compatible with Digital Data Service are delineated in Technical Reference TR-NWT-000341.

Compatible channel interfaces are set forth in Section 11.3.5(D), following.

Joe Jetensky, Manager
HunTel Communications
1605 Washington Street
Blair, NE 68008

ACCESS SERVICE

7. **Special Access Service** (Cont'd)

7.2 Channel Types and Services Descriptions (Cont'd)

7.2.2 Digital Data Service (Cont'd)

(B) Optional Features and Functions

(1) Central Office Bridging Capability

Bridging is not available on a 64.0 Kbps channel..

(2) Transfer Arrangement

An arrangement that affords the customer an additional measure of protection and/or flexibility in the use of their access channel(s) on a 1xN basis. The arrangement can be utilized to transfer a leg of Special Access Service to either a spare or working channel that terminates in either the same or a different customer premises. This arrangement is only available at a Telephone Company designated hub. A key activated or dial-up control service is required to operate the transfer arrangement. A spare channel, if required, is not included as a part of the option.

(3) Public Packet Switching Network (PPSN) Interface Arrangement

An arrangement that provides the interface requirements that permit a Digital Data Service to interface with a Public Packet Switching Network packet switch located in a Telephone Company premises. The interface is compatible with X.25 and X.75 packet switching protocols as defined by the CCITT.

The table set forth in Section 7.2.3(A), following, shows the technical specifications packages with which the optional features and functions are available.

Joe Jetensky, Manager
HunTel Communications
1605 Washington Street
Blair, NE 68008

ACCESS SERVICE

7. **Special Access Service** (Cont'd)

7.2 Channel Types and Services Descriptions (Cont'd)

7.2.3 High Capacity Service

A High Capacity channel is a channel for the transmission of nominal 64.0 Kbps*,128**, 256**, 384**, 512** Kbps or 1.544 Mbps isochronous serial data. The actual bit rate is a function of the channel interface selected by the customer. High Capacity channels are provided between customer premises or between a customer premises and a Telephone Company hub or hubs.

The customer may provide the Network Channel Terminating Equipment associated with the High Capacity channel at the customer's premises.

A channel with technical specifications package HC1 will be capable of an error-free second performance of 98.75% over a continuous 24-hour period as measured at the 1.544 Mbps rate through a CSU equivalent which is designed, manufactured, and maintained to conform with the specifications contained in Technical Reference PUB 62411.

* Available only as a channel of 1.544 Mbps facility to a Telephone Company Digital Data hub or as a cross connect of two 2.4, 4.8, 9.6, 56.0 or 64.0 Kbps channels of two 1.544 Mbps facilities to a Digital Data hub(s). The customer must provide system and channel assignment data.

** 128, 256, 384, and 512 Kbps services are offered only where equipment and facilities are available.

ACCESS SERVICE

7. **Special Access Service** (Cont'd)

7.2 Channel Types and Services Descriptions (Cont'd)

7.2.3 High Capacity Service (Cont'd)

(A) Technical Specifications Packages and Network Channel Interfaces

	Package					
SD Code	HCO	HC1	HC1C	HC2	HC3	HC4
NC Code	HS	HC	HD	HE	HF	HG
Parameters						
Error-Free Seconds		X				
Optional Features and Functions						
Automatic Loop Transfer		X				
Central Office Multiplexing:						
DS4 to DS1						X
DS3 to DS1					X	
DS2 to DS1				X		
DS1C to DS1			X			
DS1 to Voice		X				
DS1 to DSO		X				
DSO to Subrate*	X					
Transfer Arrangement		X				

A channel with technical specifications package HC1 will be capable of an error-free second performance of 98.75% over a continuous 24-hour period as measured at the 1.544 Mbps rate through a CSU equivalent which is designed, manufactured, and maintained to conform with the specifications contained in Technical Reference PUB 62411.

Compatible channel interfaces are set forth in Section 11.3.5(E), following:

* Available only on a channel of 1.544 Mbps facility to a Telephone Company hub.

ACCESS SERVICE

7. **Special Access Service** (Cont'd)

7.2 Channel Types and Services Descriptions (Cont'd)

7.2.3 High Capacity Service (Cont'd)

(A) Technical Specifications Packages and Network Channel Interfaces (Cont'd)

The following network channel interfaces (NCIs) define the bit rates that are available for a High Capacity channel:

NCI	Bit Rate
DS-15*	1.544 Mbps (DS1)

(B) Optional Features and Functions

(1) Automatic Loop Transfer

The Automatic Loop Transfer provides protection on a 1xN basis against failure of the facilities between a customer premises and the wire center serving that premises. Protection is furnished through the use of a switching arrangement that automatically switches to a spare channel line when a working line fails. The spare channel is not included as a part of the option. This option requires compatible equipment at both the serving wire center and the customer premises. The customer is responsible for providing the equipment at its premises.

* A 64.0 Kbps channel is available as a channel(s) of a 1.544 Mbps channel to a Telephone Company hub.

Joe Jetensky, Manager
HunTel Communications
1605 Washington Street
Blair, NE 68008

ACCESS SERVICE

7. **Special Access Service** (Cont'd)

7.2 Channel Types and Services Descriptions (Cont'd)

7.2.3 High Capacity Service (Cont'd)

(B) Optional Features and Functions (Cont'd)

(2) Transfer Arrangement

An arrangement that affords the customer an additional measure of flexibility in the use of their access channel(s). The arrangement can be utilized to transfer a leg of a Special Access Service to either a spare or working channel that terminates in either the same or a different customer premises. A key activated or dial-up control service is required to operate the transfer arrangement. A spare channel, if required, is not included as part of the option.

ACCESS SERVICE

7. **Special Access Service** (Cont'd)

7.2 Channel Types and Services Descriptions (Cont'd)

7.2.3 High Capacity Service (Cont'd)

(B) Optional Features and Functions (Cont'd)

(3) Central Office Multiplexing

(a) DS1 to Voice

An arrangement that converts a 1.544 Mbps channel to 24 channels for use with Voice Grade Services. A channel(s) of this DS1 to the Hub can also be used for a Digital Data Service.

(b) DS1 to DSO

An arrangement that converts a 1.544 Mbps channel to 23 64.0 Kbps channels utilizing digital time division multiplexing.

The table set forth in Section 7.2.3(A), preceding, shows the technical specifications packages with which the optional features and functions are available.

(c) DS3 to DS1

An arrangement that converts a 44.736 Mbps channel to 28 DS1 channels using digital time division multiplexing.

Joe Jetensky, Manager
HunTel Communications
1605 Washington Street
Blair, NE 68008

ACCESS SERVICE

7. **Special Access Service** (Cont'd)

7.3 Service Configurations

There are two types of service configurations over which Special Access Service are provided: two-point service and multipoint service.

7.3.1 Two-Point Service

A two-point service connects two customer premises, either on a directly connected basis or through a hub where multiplexing functions are performed, or a customer premises and a WATS Serving Office.

ACCESS SERVICE

7. **Special Access Service** (Cont'd)

7.3 Service Configurations (Cont'd)

7.3.1 Two-Point Service (Cont'd)

Applicable rate elements are:
- Channel Terminations
- Channel Mileage (as applicable)
- Optional Features and Functions (when applicable)

In addition, a Special Access Surcharge, as set forth in Section 7.4.4, following, may be applicable.

The following diagram depicts a two-point Voice Grade service connecting two customer premises (CP) located 15 miles apart.

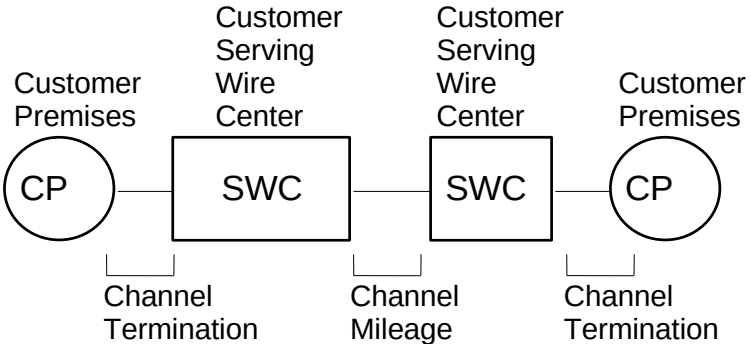

Applicable rate elements are:

- Channel Terminations (1 applicable per CP)
- Channel Mileage (1 section, Channel Mileage Facility per mile plus 2 Channel Mileage Terminations)

ACCESS SERVICE

7. **Special Access Service** (Cont'd)

7.3 Service Configurations (Cont'd)

7.3.2 Multipoint Service

Multipoint service connects three or more customer premises through one or more Telephone Company hubs. Only certain types of Special Access Service are provided as multipoint service. These are so designated in the descriptions for the appropriate channel.

The channel between hubs (i.e., bridging locations) on a multipoint service is a mid-link. There is no limitation on the number of mid-links available with a multipoint service. However, when more than three mid-links in tandem are provided the quality of the overall service may be degraded.

Multipoint service utilizing a customized technical specifications package, as set forth in Section 7.1.4, preceding, will be provided when technically possible. If the Telephone Company determines that the requested characteristics for a multipoint service are not compatible, the customer will be advised and given the opportunity to change the order.

When ordering, the customer will specify the desired bridging hub(s). NATIONAL EXCHANGE CARRIER ASSOCIATION, INC. TARIFF F.C.C. No. 4 identifies serving wire centers, hub locations and the type of bridging functions available.

Applicable Rate Elements are:

- Channel Terminations (one per customer premises).
- Channel Mileage (as applicable between the serving wire center for each customer premises and the hub and between hubs).
- Additional Optional Features and Functions (when applicable).

ACCESS SERVICE

7. **Special Access Service** (Cont'd)

7.3 Service Configurations (Cont'd)

7.3.2 Multipoint Service (Cont'd)

In addition, the Special Access Surcharge, as set forth in Section 7.4.4, following, may be applicable.

Example: Voice Grade multipoint service connecting four customer premises (CP) via two customer specified bridging hubs.

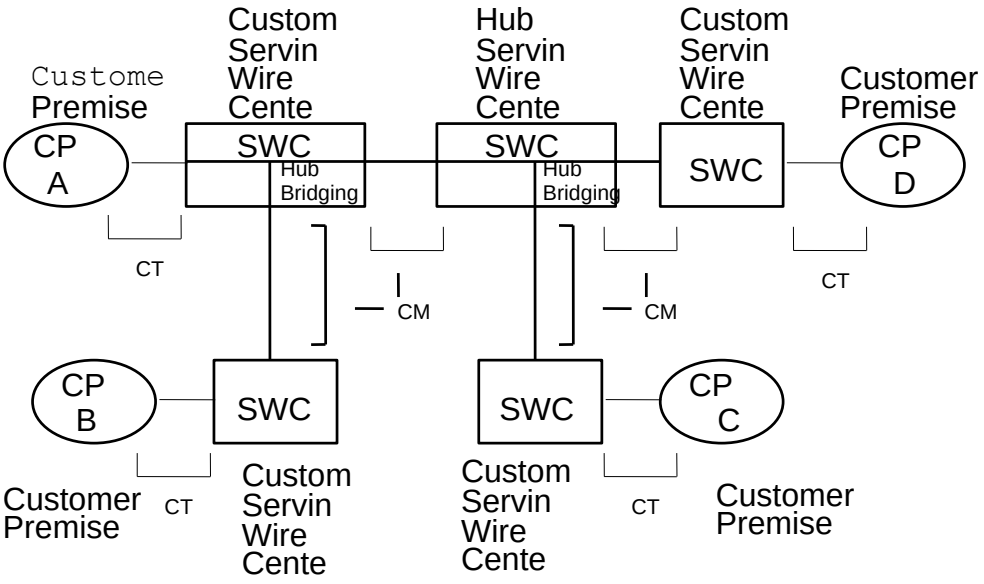

CT - Channel Termination
CM - Channel Mileage

Applicable rate elements are:
- Channel Terminations (4 applicable)
- Channel Mileage (4 sections, Channel Mileage Facility per mile plus 2 Channel Mileage Terminations per section)
- Bridging Optional Feature (6 applicable, i.e., each bridge port)

ACCESS SERVICE

7. **Special Access Service** (Cont'd)

7.4 Rate Regulations

This section contains the specific regulations governing the rates and charges that apply for Special Access.

7.4.1 Application of Rates and Charges

(A) Nonrecurring Charges

Nonrecurring Charges apply to each installation of service as a one-time charge. Changes to existing services other than administrative changes described in Section 6.7.1, preceding, will be treated as a discontinuance of the existing service and an installation of a new service.

If an additional leg is added to an existing multipoint service, nonrecurring charges will only apply to the additional termination.

Nonrecurring charges apply for each Channel Termination installed and are set forth in Sections 12.3(A)(1), 12.3(B)(1), and 12.3(C)(1), following.

(B) Recurring Charges

Recurring charges apply to the ongoing provision of Special Access Service to the customer.

Monthly rates are recurring rates that apply each month or fraction thereof that a Special Access Service is provided. For billing purposes, each month is considered to have 30 days.

7.4.2 Minimum Periods

The minimum service period for all services is one month.

ACCESS SERVICE

7. **Special Access Service** (Cont'd)

7.4 Rate Regulations (Cont'd)

7.4.3 Mileage Measurement

The mileage to be used to determine the monthly rate for the Channel Mileage is calculated on the airline distance between the locations involved, i.e., the serving wire centers associated with two customer premises, a serving wire center associated with a customer premises and a Telephone Company hub, two Telephone Company hubs or, the serving wire center associated with a customer premises and the WATS serving office. The serving wire center associated with a customer premises is the serving wire center from which this customer premises would normally obtain dial tone.

Mileage charges are shown in Sections 12.3(A)(2), 12.3(B)(2), and 12.3(C)(2), following. To determine the rate to be billed, first compute the mileage using the V&H coordinates method, as set forth in the NATIONAL EXCHANGE CARRIER ASSOCIATION, INC. TARIFF F.C.C. No. 4, then multiply the resulting number of miles times the Channel Mileage Facility per mile rate, and add the Channel Mileage Termination Rate for each termination. When the calculation results in a fraction of a mile, always round up to the next whole mile before determining the mileage and applying the rates.

When hubs are involved, mileage is computed and rates applied separately for each section of the Channel Mileage, i.e., customer premises serving wire center to hub, hub to hub and/or hub to customer premises serving wire center. However, when any service is routed through a hub for purposes other than customer specified bridging or multiplexing (e.g., the Telephone Company chooses to so route for test access purposes). Rates will be applied only to the distance calculated between the serving wire centers associated with the customer premises.

ACCESS SERVICE

7. **Special Access Service** (Cont'd)

7.4 Rate Regulations (Cont'd)

7.4.4 Surcharge for Special Access Service

(A) General

The Special Access Surcharge will apply to each interstate Special Access Service that terminates on an end user's PBX or other device where, through a function of the device, the Special Access Service interconnects to the local exchange network. Interconnection functions include but are not limited to wiring and software functions, bridging, switching or patching of calls or stations. The Surcharge will apply irrespective of whether the interconnection function is performed in equipment located at the customer's premises or in a Centrex CO-type switch. The Surcharge rate is set forth in Section 12.3(D), following.

(B) Exemption of Special Access Service

Special Access Service will be exempted from the Surcharge by the Telephone Company upon receipt of the customer's written certification as described in Section 7.4.4(C), following, for the following Special Access Service terminations:

(1) an open-end termination in a Telephone Company switch to an FX line, including CCSA and CCSA-equivalent ONALs; or

(2) an analog channel termination that is used for radio or television program transmission; or

(3) a termination used for TELEX service; or

(4) a termination that by the nature of its operating characteristics could not make use of Telephone Company common lines such as, terminations which are restricted through hardware or software;

Joe Jetensky, Manager
HunTel Communications
1605 Washington Street
Blair, NE 68008

ACCESS SERVICE

7. **Special Access Service** (Cont'd)

7.4 Rate Regulations (Cont'd)

7.4.4 Surcharge for Special Access Service (Cont'd)

(B) Exemption of Special Access Service (Cont'd)

(5) a termination that interconnects either directly or indirectly to the local exchange network where the usage is subject to Switched Access Charges; or

(6) a termination that the customer certifies to the Telephone Company is not connected to a PBX or other device which interconnects the Special Access Service to a local exchange subscriber line.

(C) Exemption Certification

(1) Special Access Services which are terminated as set forth in Section 7.4.4(B), preceding, will be exempted from the Special Access Surcharge if the customer provides the Telephone Company with written exemption certification. The certification may be provided to the Telephone Company (1) at the time the Special Access Service is ordered or installed; (2) at such time as the service is reterminated to a device which does not interconnect to the service to local exchange facilities, or (3) at such time as the service becomes associated with a Switched Access Service.

Joe Jetensky, Manager
HunTel Communications
1605 Washington Street
Blair, NE 68008

ACCESS SERVICE

7. **Special Access Service** (Cont'd)

7.4 Rate Regulations (Cont'd)

7.4.4 Surcharge for Special Access Service (Cont'd)

(C) Exemption Certification (Cont'd)

(2) The exemption certification is to be provided by the customer ordering the service. The certification must be signed by the customer or authorized representative and include the category of exemption, as set forth in Section 7.4.4(B), preceding, for each termination, and the date which the exemption is effective.

(3) The customer shall also notify the Telephone Company when an exempted Special Access Service is changed or reterminated such that the exemption is no longer applicable.

(4) The Telephone Company will work cooperatively with the customer to resolve any questions regarding the exemption certification. In addition, the Telephone Company may withhold exemption of the service until the questions are resolved.

(D) Application of Surcharge

(1) The Telephone Company will bill the appropriate Special Access Surcharge to the ordering customer for each intrastate Special Access Service installed unless exemption certification is provided as set forth in Section 7.4.4, preceding. In the case of multipoint Special Access Services, one Special Access Surcharge will apply for each termination of a Special Access Channel at an end user's premises.

ACCESS SERVICE

7. **Special Access Service** (Cont'd)

7.4 Rate Regulations (Cont'd)

7.4.4 Surcharge for Special Access Service (Cont'd)

(D) Application of Surcharge (Cont'd)

(2) If a written certification is not received at the time the Special Access Service is obtained, the Surcharge will be applied. Exempt status will become effective on the certification date indicated by the customer, subject to the regulations set forth in (3), following.

(3) The Telephone Company will cease billing the Special Access Surcharge when certification, is received. If the status of the Special Access Service was changed prior to receipt of the exemption certification, the Telephone Company will credit the customer's account not to exceed ninety (90) days, based on the effective date of the change as specified by the customer in the letter of certification.

7.4.5 Mixed Use Analog and Digital High Capacity Services

Mixed use refers to a rate application applicable only when the customer orders High Capacity Special Access facilities between a customer premises and a Telephone Company hub where the Telephone Company performs multiplexing/de- multiplexing functions and the same customer then orders the derived channels as Special and Switched Access Services. If the customer has Switched Access Service between a customer premises and an end office that is multiplexed at a Telephone Company hub and subsequently orders the derived channels as Special and Switched Access Service, rates and charges will apply as if the service were ordered as mixed use.

Joe Jetensky, Manager
HunTel Communications
1605 Washington Street
Blair, NE 68008

ACCESS SERVICE

7. **Special Access Service** (Cont'd)

7.4 Rate Regulations (Cont'd)

7.4.5 Mixed Use Analog and Digital High Capacity Services (Cont'd)

Except as noted above, the High Capacity facility will be ordered, provided and rated as Special Access Service (i.e., Channel Termination, Channel Mileage, as appropriate, and Multiplexing Arrangement). The nonrecurring charge that applies when the mixed use facility is installed will be the nonrecurring charge associated with the appropriate Special Access High Capacity Channel Termination.

Rating as Special Access will continue until such time as the customer chooses to use a portion of the available capacity for Switched Access Service. Individual service (i.e., Switched or Special Access) nonrecurring charges will not apply to the individual channels of the mixed use facility.

Joe Jetensky, Manager
HunTel Communications
1605 Washington Street
Blair, NE 68008

ACCESS SERVICE

7. **Special Access Service** (Cont'd)

7.4 Rate Regulations (Cont'd)

7.4.5 Mixed Use Analog and Digital High Capacity Services (Cont'd)

When Special Access Service is provided utilizing a channel of the mixed use facility to a hub, High Capacity rates and charges will apply for the facility to the hub, as set forth preceding, and individual service rates and charges will apply from the hub to the customer premises. The rates and charges that will apply to the portion from the hub to the customer premises will be dependent on the specific type of Special Access Service that is provided (e.g., Voice Grade, Telegraph, etc.). The applicable rates and charges will include a Channel Termination and Channel Mileage, if applicable, rates and charges for optional features and functions associated with the service, if any, will apply for the appropriate channel type.

As each individual channel is activated for Switched Access Service, the High Capacity Special Access Channel Termination, Channel Mileage, and Multiplexing rates will be reduced accordingly (e.g., 1/24th for a DS1 service, etc.).

Switched Access Service rates and charges, as set forth in Section 12.2, following, will apply for each channel that is used to provide a Switched Access Service. Additionally, the Switched Access Service Entrance Facility, Direct Trunked Transport, and Multiplexing charges, if applicable, will be calculated by multiplying their respective rates by the ratio of derived Switched Access Service channels to the total number of channels that can be derived.

The customer must place an order for each individual Switched or Special Access Service utilizing the Mixed Use Facilities and must specify the channel assignment for each such service.

Joe Jetensky, Manager
HunTel Communications
1605 Washington Street
Blair, NE 68008

ACCESS SERVICE

7. **Special Access Service** (Cont'd)

7.4 Rate Regulations (Cont'd)

7.4.6 High Capacity Optional Rate Plans

The Term Discount plan applies to Special Access DS1 High Capacity Service Channel Termination, Channel Mileage Facility and Channel Mileage Termination monthly rates, as set forth following. The current monthly rates for such services are reduced by a fixed percentage. The amount of the discount percentage differs based on the length of the service commitment period selected by the customer. The Term Discount percentages for High Capacity Service are as set forth in 12.3(E) following;

The minimum service period on a monthly rate basis is one month for DS1 service.

(A) Term Discount Plan Description

DS1 High Capacity Special Access Service may be ordered at the customer's option on a monthly rate basis or for Term Discount periods of 36 months (3 years) or 60 months (5 years).

The minimum service period for Term Discount plans is twelve months. The customer must specify the length of the service commitment period at the time the service is ordered.

For customers that subscribe to the Term Discount plan for 36 or 60 months, the Term Discount percentage as set forth in 12.3(E), following, will be frozen from Telephone Company initiated decreases for the entire discount period at the percent in effect at the beginning of the Term Discount period.

ACCESS SERVICE

7. **Special Access Service** (Cont'd)

7.4 Rate Regulations (Cont'd)

7.4.6 High Capacity Optional Rate Plans (Cont'd)

(A) Term Discount Plan Description (Cont'd)

If a Term Discount Percentage increase occurs during the term of an existing Term Discount plan, the increased percentage will be applied automatically to the remainder of the current Term Discount period.

At the end of the Term Discount period, the customer may convert to month-to-month service or subscribe to a new Term Discount Plan. If the customer does not make a choice by the end of the discount period, the rates will automatically convert to month-to-month service rates.

To be included in a Service Term Discount plan all eligible High Capacity rate elements must be ordered for the same commitment term (i.e., all 36 months or all 60 months) and with the same service date. When additional capacity is subsequently added, it will be available only on a month-to-month basis unless the discount period of the entire service is upgraded.

Eligible DS1 High Capacity rate elements are those Channel Terminations, Channel Mileage Facility and Channel Mileage Terminations provided to a customer by the Telephone Company. As long as the number of DS1s included in a Term Discount plan remains constant, customer requests to install and disconnect DS1 services, including changes affecting different wire centers and/or customer premises, will not change the current Term Discount period or the minimum service period and Discontinuance of Service charges as set forth in (2) following will not apply.

ACCESS SERVICE

7. **Special Access Service** (Cont'd)

7.4 Rate Regulations (Cont'd)

7.4.6 High Capacity Optional Rate Plans (Cont'd)

(A) Term Discount Plan Description (Cont'd)

(1) Upgrades in Term Discounts

Services provided under monthly rates or Term Discount rates may be upgraded to a Term Discount plan at any time without incurring Channel Termination nonrecurring charges or discontinuance charges for existing services. The new Term Discount plan must meet or exceed the service term of the plan being upgraded. For example, a service with a 36-month commitment period may be upgraded to a new 36-month, or 60 month service period. The monthly rates will be those that are in effect at the time the service is upgraded. A new minimum service period applies to all High Capacity Service that is upgraded.

(2) Discontinuance of Service

If the customer chooses to disconnect all or a portion of the service prior to the expiration of the Term Discount period, discontinuance charges will apply to the portion of the service being discontinued.

Should the customer choose to discontinue a Term Discount plan prior to the completion of the minimum service period, discontinuance charges will apply. Discontinuance charges equal to one hundred percent of the total undiscounted monthly rates, less any amounts previously paid, will apply for the minimum service period. Additionally, discontinuance charges of fifteen percent of the total undiscounted monthly charges for DS1 service will apply to the remaining portion of the discount service term.

Joe Jetensky, Manager
HunTel Communications
1605 Washington Street
Blair, NE 68008

ACCESS SERVICE

7. **Special Access Service** (Cont'd)

7.4 Rate Regulations (Cont'd)

7.4.6 High Capacity Optional Rate Plans (Cont'd)

(A) Term Discount Plan Description (Cont'd)

(2) Discontinuance of Service (Cont'd)

Should the customer choose to discontinue service ordered under a Term Discount plan after the minimum service period but before the completion of the discount period, discontinuance charges will apply. Discontinuance charges of fifteen percent of the total undiscounted monthly charges for DS1 service will apply to the remaining portion of the discount period. For example, a customer has a DS1 Service which it chooses to discontinue after 33 months into a 60-month service term. The Discontinuance charge would be 0.15 times 27 months times the undiscounted monthly rates for that service.

Joe Jetensky, Manager
HunTel Communications
1605 Washington Street
Blair, NE 68008

ACCESS SERVICE

8. Advanced Communications Services

8.1. Frame Relay Service

Frame Relay Service (FRS) utilizes a separate data network, comprised of switching and transmission facilities. The network provides for the transfer of data provided by a customer in a frame format. The data is separated into discrete segments for transmission through the public packet data network.

8.1.1 General

Frame Relay Service is a medium-speed, connection-oriented packet-switched data service that allows for the interconnection of Local Area Networks (LANs) or other compatible end user customer premises equipment for the purpose of connecting to another network. The terminal equipment accumulates the customer data and puts it into a frame relay format suitable for transmission over the FRS network. This terminal equipment must conform to American National Standards Institute (ANSI) and Telecommunication Standardization Bureau of the International Telecommunication Union (ITU-T).

FRS permits customers to share network bandwidth for data transmissions.

Rates and charges for FRS are set forth in 12.4, following.

In addition to the regulations and charges specified in this section, the general regulations and charges specified in other sections of this tariff apply as appropriate.

8.1.2 Service Description

FRS is a transport service that facilitates the exchange of variable length information units (frames) between customer connections. Frames travel a fixed path through the network with an address that specifies the Permanent Virtual Connection (PVC). Addresses are read by the network processor and the frames are relayed to the preassigned destination.

The service includes the Access Link, or port connection, and the Permanent Virtual Connections (PVCs), which have Committed Information Rates (CIRs). A special access facility (ordered from Section 7 of this tariff) is used to connect to the frame relay switch. Rates apply for this special access connection as stated in Section 7.

ACCESS SERVICE

8. **Advanced Communications Services** (Cont'd)

8.1 Frame Relay Service (Cont'd)

8.1.2 Service Description (Cont'd)

The Access Link connects the telephone company frame relay switch and the customer's network. It permits FRS compatible access customer or end user customer premises equipment to originate or terminate data from another source. Connections between end user customer premises equipment and the Telephone Company frame relay switch are available at speeds of 56 Kbps, 64 Kbps, and 1.544 Mbps. Each connection requires identification of a corresponding terminating port connection(s).

Connections are provided via Channel Terminations as set forth in Section 7. Only digital connections are permitted with FRS. All rates and regulations as specified in Section 7 will apply in addition to the rates and charges specified for FRS.

All Access Links must conform to ANSI Standards T1.606-1990, T1.606 Addendum 1-1991, T1.606a-1992, T1.617, Annex D-1992, T1.606b-1993, and TR-TSV-001370, Issued: May 1993.

PVCs are software defined, end-to-end, bi-directional communications paths that are established and disestablished via the access service order process. While no physical circuits are dedicated, the two network addresses (one from each port connection) are connected electronically to form a PVC.

There are two types of PVCs available. The standard PVC establishes a communications path between two ports on the same frame relay switch. The extended PVC establishes a communications path between two ports on two interconnected telephone company frame relay switches.

At the time service is ordered, the number of PVCs will be identified, along with their Committed Information Rates (CIRs). The CIR is the bit rate at which the FRS network commits to transfer data. CIRs provide for frame relay switch throughput at designated speeds. This information is required for network routing purposes.

Joe Jetensky, Manager
HunTel Communications
1605 Washington Street
Blair, NE 68008

ACCESS SERVICE

8. **Advanced Communications Services** (Cont'd)

8.1 Frame Relay Service (Cont'd)

8.1.3 Ordering Options and Conditions

Frame Relay Service is ordered under the provisions set forth in Section 5 of this tariff. Also included in that section are other charges which may be associated with ordering FRS.

A minimum of two FRS port connections are required for data to be transported between customer premises.

When placing an order for FRS, the customer must specify:

- the number of PVCs required;

- the location of the ports for each PVC;

- the CIRs associated with each PVC;

- that the traffic consists of more than 10% interstate traffic.

The port connecting the special access facility to the Telephone Company frame relay switch must be ordered and provided at the same speed as the special access facility.

When connecting to the port of another customer, the ordering customer must obtain authorization from the other customer.

When an extended PVC is ordered, the customer is responsible for placing the order with all telephone companies involved.

8.1.4 Acceptance Testing

At no additional charge, the Telephone Company will, at the customer's request, cooperatively test at the time of installation.

Joe Jetensky, Manager
HunTel Communications
1605 Washington Street
Blair, NE 68008

ACCESS SERVICE

8. **Advanced Communications Services** (Cont'd)

8.1 Frame Relay Service (Cont'd)

8.1.5 Rate Regulations

This section contains the specific regulations governing the rates and charges that apply for Frame Relay Service.

(A) Rate Categories

The following diagrams depict a generic view of the components of FRS and the manner in which the components are combined to provide FRS and Interconnected FRS.

FRAME RELAY SERVICE

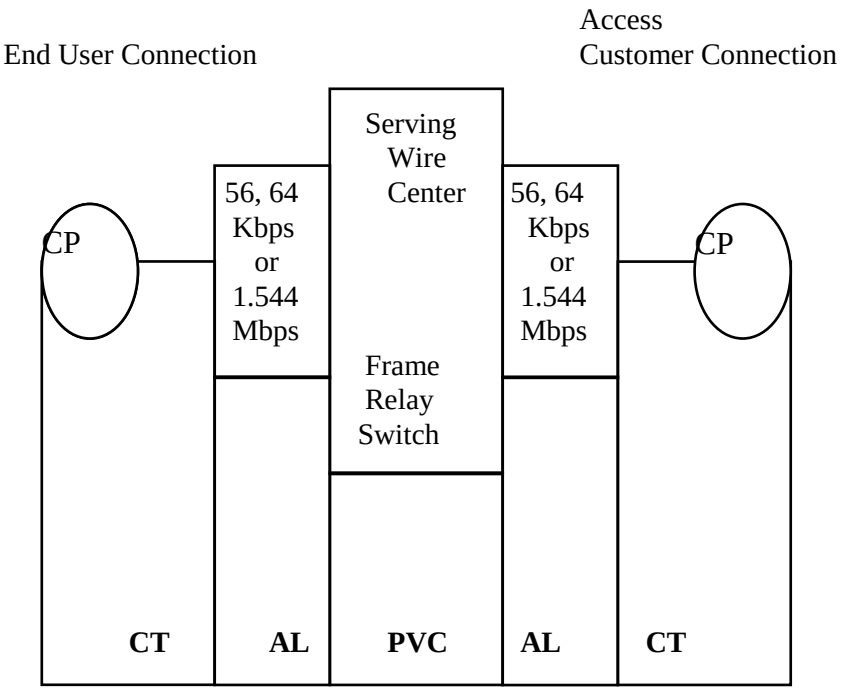

CP - Customer Premises
CT - Channel Termination
AL - Access Link
PVC - Permanent Virtual Connection

Joe Jetensky, Manager
HunTel Communications
1605 Washington Street
Blair, NE 68008

ACCESS SERVICE

8. **Advanced Communications Services** (Cont'd)

8.1 Frame Relay Service (Cont'd)

8.1.5 Rate Regulations (Cont'd)

INTERCONNECTED FRAME RELAY SERVICE

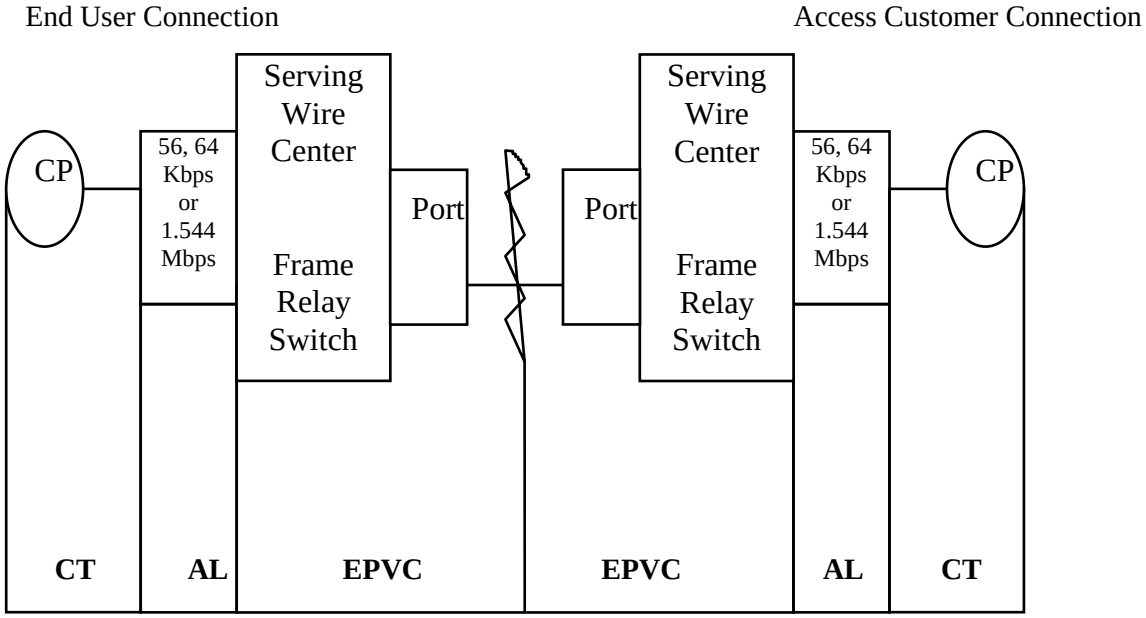

CP - Customer Premises
CT - Channel Termination
AL - Access Link
EPVC - Extended Permanent Virtual Connection

Frame Relay Service is available at the wire centers identified in National Exchange Carrier Association, Inc. Tariff F.C.C. No. 4.

ACCESS SERVICE

8. **Advanced Communications Services** (Cont'd)

8.1 Frame Relay Service (Cont'd)

8.1.5 Rate Regulations (Cont'd)

(A) Access Link

The Access Link is the physical location in the Telephone Company switching office where the special access facility of the customer connects to the FRS network. It receives the data frame from the end user customer's Local Area Network or other compatible CPE device and verifies that the end user connection and corresponding access customer connection are valid before relaying the frame to the destination end point.

The Access Link consists of either a 56.0 Kbps, a 64.0 Kbps, or a 1.544 Mbps port interface connection. The port connecting the special access facility to the Telephone Company frame relay switch must be ordered and provided at the same speed as the special access facility.

Joe Jetensky, Manager
HunTel Communications
1605 Washington Street
Blair, NE 68008

ACCESS SERVICE

8. **Advanced Communications Services** (Cont'd)

8.1 Frame Relay Service (Cont'd)

8.1.5 Rate Regulations (Cont'd)

(B) Permanent Virtual Connection

A PVC is a software defined communications path between two port connections within the FRS network.

Each PVC is provisioned with a customer selected Committed Information Rate (CIR). The CIR is a transmission speed specified by the customer. CIRs range from 56 Kbps to 768 Kbps. The Telephone Company will provide switch capacity to permit the customer to transmit information with guaranteed delivery at the specified CIR. The Telephone Company will permit customers to attempt to transmit at speeds of up to two times the CIR with no guarantee of completion. Attempted transmissions at above two times the CIR will not be permitted.

Customers will be permitted to order multiple PVCs on a given port subject to switch limitations. Customers anticipating non-simultaneous transmission may order CIRs assigned to these multiple PVCs, the sum of which may theoretically exceed the actual throughput of the port. However, when simultaneous transmission of multiple PVCs occurs, the total of the transmission rate (CIRs) may not exceed the actual throughput of the port.

There are two types of PVCs available. The standard PVC establishes a communications path between ports on the same frame relay switch. The extended PVC establishes a communications path between a port on the Telephone Company's frame relay switch and a port on another interconnected telephone company's frame relay switch.

Joe Jetensky, Manager
HunTel Communications
1605 Washington Street
Blair, NE 68008

ACCESS SERVICE

8. **Advanced Communications Services** (Cont'd)

8.1 Frame Relay Service (Cont'd)

8.1.5 Rate Regulations (Cont'd)

(C) Types of Rates and Charges

(1) Monthly Rates

Monthly rates are recurring rates that apply each month or fraction thereof that FRS is provided. For billing purposes, each month is considered to have 30 days.

(2) Nonrecurring Charges

Nonrecurring charges are one-time charges that apply for specific work activity (i.e., installation of a service or change to an existing service). The types of nonrecurring charges that apply for FRS are as follows:

a) Installation of Service

Nonrecurring charges apply for the installation of Access Links and PVCs.

ACCESS SERVICE

8. **Advanced Communications Services** (Cont'd)

8.1 Frame Relay Service (Cont'd)

8.1.5 Rate Regulations (Cont'd)

(C) Types of Rates and Charges (Cont'd)

(2) Nonrecurring Charges (Cont'd)

b) Service Rearrangements

Service Rearrangements are changes to existing (installed) services.

A PVC rearrangement charge will be applied whenever a change is made to the CIR of an existing PVC after initial port installation and/or a change is made to the terminating port destination of the PVC. Administrative changes will be made without charge to the customer. Administrative changes are as follows:

- Change of customer name;
- Change of customer or customer's end user premises address when the change is not a result of physical relocation of equipment;
- Change in billing data (name, address, or contact name telephone number);
- Change of agency authorization;
- Change of customer circuit identification;
- Change of billing account number;
- Change of customer or customer's end user contact name or telephone number; and
- Change of jurisdiction.

(D) Minimum Period

The minimum period for FRS is one month, and the full monthly rate will apply to the first month. Adjustments for quantities of services established or discontinued in any billing period beyond the minimum periods are set forth in Section 2 of this tariff.

Joe Jetensky, Manager
HunTel Communications
1605 Washington Street
Blair, NE 68008

ACCESS SERVICE

9. Additional Engineering, Additional Labor and Miscellaneous Services

In this section, normally scheduled working hours are an employee's scheduled work period on any given business day which totals eight (8) hours.

9.1 Additional Engineering

Additional Engineering will be provided by the Telephone Company at the request of the customer when:

(A) A customer requests additional technical information after the Telephone Company has already provided the technical information normally included on the Design Layout Report (DLR) as set forth in Sections 6.5.7 and 7.1.2, preceding.

(B) Additional engineering time is incurred by the Telephone Company to engineer a customer's request for a customized service as set forth in Section 7.1.4, preceding.

The Telephone Company will notify the customer that additional engineering charges will apply before any additional engineering is undertaken.

9.1.1 Charges for Additional Engineering

The charges for additional Engineering are as shown in Section 12.5(A), following.

9.2 Additional Labor

Additional labor is that labor requested by the customer on a given service and agreed to by the Telephone Company. The Telephone Company will notify the customer that additional labor charges will apply before any additional labor is undertaken. Additional labor charges apply to the services described in Sections 9.2.1 through 9.2.6, following.

9.2.1 Overtime Installation

Overtime installation is that Telephone Company installation effort outside of normally scheduled working hours.

ACCESS SERVICE

9. **Additional Engineering, Additional Labor and Miscellaneous Services** (Cont'd)

9.2 Additional Labor (Cont'd)

9.2.2 Overtime Repair

Overtime repair is that Telephone Company maintenance effort performed outside of normally scheduled working hours.

9.2.3 Standby

Standby includes all time in excess of one-half (1/2) hour during which Telephone Company personnel stand by to make installation acceptance tests or cooperative tests with a customer.

9.2.4 Testing and Maintenance with Other Telephone Companies

Additional labor charges apply for additional testing, maintenance or repair of facilities which connect to facilities of other telephone companies. This is in addition to the normal effort required to test, maintain or repair facilities provided solely by the Telephone Company.

9.2.5 Testing Services

Testing Services other than those described in other parts of this tariff will be provided at the hourly rates described if requested by the customer. Testing will be provided subject to the availability of equipment and qualified personnel.

9.2.6 Other Labor

Other labor is that additional labor incurred to accommodate a specific customer request that involves labor which is not covered by any other section of this tariff. It also covers additional labor necessary to meet customer requests as described in Section 5, preceding.

ACCESS SERVICE

9. **Additional Engineering, Additional Labor and Miscellaneous Services** (Cont'd)

9.2 Additional Labor (Cont'd)

9.2.7 Charges for Additional Labor

The charges for Additional Labor are shown in Section 12.5(B), following.

9.3 Miscellaneous Services

9.3.1 Maintenance of Service

(A) When a customer reports a trouble to the Telephone Company for clearance and the trouble is not in the Telephone Company's facilities, the customer shall be responsible for payment of a Maintenance of Service charge for the period of time from when Telephone Company personnel are dispatched to the customer's premises to when the work is completed.

(B) The charges for Maintenance of Service are shown in Section 12.5(C), following.

9.3.2 Programming Services

(A) Programming charges apply when a request by a customer for information concerning the access services provided to the customer result in the creation of new computer software or the modification of existing software in order to provide the requested information.

The Telephone Company will notify the customer that additional programming charges will apply before any additional programming is undertaken.

(B) The charges for Programming Services are shown in Section 12.5(D), following.

ACCESS SERVICE

9. **Additional Engineering, Additional Labor and Miscellaneous Services** (Cont'd)

9.3 Miscellaneous Services (Cont'd)

9.3.3 Presubscription

Pursuant to the Federal Communications Commission's Memorandum Opinion and Order, CC Docket No. 83-1145, Phase I, adopted May 31, 1985, and released June 12, 1985, the Allocation Plan, outlined in Appendix B of this Order, will be available for inspection in the Public Reference Room of the Tariff Division at the Federal Communications Commission's Washington D.C. location or may be obtained from the Commission's commercial contractor.

(A) Presubscription is the process by which an end user or Payphone Service Provider (PSP) may select and designate to the Telephone Company an Interexchange Carrier (IC) to access, without dialing an access code, for interLATA, interstate calls. This IC is referred to as the end user's or PSP's predesignated IC (PIC).

(B) New end users and PSPs that are served by end offices equipped with Feature Group D will be asked to presubscribe to an IC at the time they place an order with the Telephone Company for Telephone Exchange Service. There will be no charge for this initial selection. They may select either of the following options:

- designate a primary IC for all of its lines,
- designate a different IC for each of its lines.

Joe Jetensky, Manager
HunTel Communications
1605 Washington Street
Blair, NE 68008

ACCESS SERVICE

9. **Additional Engineering, Additional Labor and Miscellaneous Services** (Cont'd)

9.3 Miscellaneous Services (Cont'd)

9.3.3 Presubscription (Cont'd)

(B) (Cont'd)

Only one IC may be selected for each individual line, or lines terminating in the same hunt group. Subsequent to the installation of Telephone Exchange Service and after the end user's or PSP's initial selection of a predesignated IC, for any change in selection, the nonrecurring charge set forth in Section 12.5(E), following, applies.

(C) If the new end user or PSP fails to designate an IC as its predesignated IC prior to the date of installation of Telephone Exchange Service, the Telephone Company will (1) allocate the end user or PSP to an IC based upon current IC presubscription ratios, (2) require the end user or PSP to dial an access code (101XXXX) for all interstate calls, or (3) block the end user or PSP from interstate calling. The end user or PSP will be notified which option will be applied if they fail to presubscribe to an IC. An allocated or blocked end user may designate another, or initial, IC as its predesignated IC one time at no charge, if it is requested within six months after the installation of Telephone Exchange Service.

For any change in selection after 6 months from the installation of Telephone Exchange Service, the nonrecurring charge set forth in Section 12.5(E), following, applies.

(D) If an IC elects to discontinue its Feature Group D Service offering, the IC will notify the Telephone Company of the cancellation. The IC will also notify all end users and/or PSPs which selected them that they are canceling their service and that they should contact the Telephone Company to select a new primary IC.

Joe Jetensky, Manager
HunTel Communications
1605 Washington Street
Blair, NE 68008

ACCESS SERVICE

9. **Additional Engineering, Additional Labor and Miscellaneous Services (Cont'd)**

9.3 Miscellaneous Services (Cont'd)

9.3.3 Presubscription (Cont'd)

(D) (Cont'd)

The IC will also inform the end user or PSP that it will pay the Presubscription Change Charge. The canceling IC will then be billed by the Telephone Company the Presubscription Change Charge for each end user or PSP that is currently predesignated to the IC.

(E) The presubscription charge is billed to the end user who is the subscriber to the Telephone Exchange Service. In the event an end user is incorrectly presubscribed due to misassignment on the part of the Telephone Company, no charge shall apply. In the event an end user is incorrectly presubscribed due to misassignment on the part of the IC, and the IC is unable to document such an assignment, the Telephone Company will apply the charge to the IC responsible for the misassignment of the end user and assign the end user to an IC of the end user's choice.

(F) Unauthorized PIC Change

If an IC requests a Primary Interexchange Carrier (PIC) change on behalf of a billed party (e.g., an end user or the designator of the PIC for a pay telephone), and the billed party subsequently denies requesting the change, the Telephone Company will:

- Notify both carriers involved in the unauthorized change allegation made by the subscriber. This notification must include the identity of both carriers.

- Direct the subscriber to the appropriate state regulatory agency or the Federal Communications Commission to file a complaint.

- Inform the subscriber that if he or she has not already paid charges to the unauthorized carrier, he or she is not required to pay for any charges incurred for the first 30 days after the unauthorized change.

Joe Jetensky, Manager
HunTel Communications
1605 Washington Street
Blair, NE 68008

ACCESS SERVICE

9. **Additional Engineering, Additional Labor and Miscellaneous Services** (Cont'd)

9.3 Miscellaneous Services (Cont'd)

9.3.4 Blocking Services

Central office blocking service is offered only where technically feasible.

(A) International Blocking Service

The Telephone Company will provide International Blocking Service to end users and Feature Group A Switched Access Service customers.

On each line for which International Blocking Service is ordered, the Telephone Company will block all international direct dialed calls that use the call sequence of 011+ or 101XXXX-011+. When capable, the Telephone Company will route the blocked calls to a recorded message.

A nonrecurring charge as set forth in Section 12.5(F)(1), following, will apply to orders adding or removing International Blocking Service that are placed subsequent to the initial installation of the associated exchange line(s) or Feature Group A Switched Access line(s). This charge does not apply when an exchange line or Feature Group A Switched Access line is disconnected.

ACCESS SERVICE

9. **Additional Engineering, Additional Labor and Miscellaneous Services** (Cont'd)

9.3 Miscellaneous Services (Cont'd)

9.3.4 Blocking Services (Cont'd)

(B) 900 Blocking Service

900 Service Access Restriction prevents access to the 900 network. When customers dial a 0+ or 1+ 900 pay-per-call number from a restricted telephone number, the 900 call is blocked.

Charges associated with 900 Service Access Restriction will be waived, on a one-time basis for customers who request a new line for a period of 60 days after the new line is installed.

Other than the above exception, charges for 900 Blocking Service apply as found in Section 12.5(F)(2), following.

Requests by customers to remove 900 Service Access Restriction must be submitted in writing to the Telephone Company.

ACCESS SERVICE

9. **Additional Engineering, Additional Labor and Miscellaneous Services** (Cont'd)

9.3 Miscellaneous Services (Cont'd)

9.3.5 Bill Name and Address Information

Interexchange carriers, enhanced service providers, and independent service providers may request Billing Name and Address (BNA) information of the Telephone Company or the Telephone Company's contracted billing agent for a specifically stated Billed Telephone Number (BTN). This information is to be used only for billing purposes, order entry, customer service, fraud prevention, and identification of end users who have moved from one location to another. Under no circumstances should this information be used for marketing purposes.

The Telephone Company will provide this information on a per-request basis, using rates specified in Section 12.5(G), following. Information will be provided for all BTNs except those that are unpublished or unlisted and are assigned to subscribers who have provided the Telephone Company with written instructions forbidding the release of BNA for their assigned numbers. For all other subscribers, BNA will be released for third number billed, collect calls, 101XXXX calls, and calling card calls.

Requests for BNA must be submitted in writing. BTNs must be listed in ascending numeric order. The request must be accompanied by: 1) carrier identification code, 2) specific BTNs for which BNA is requested, and 3) contact name and number for verification.

BNA will be provided in written form within a two-week interval from receipt of the request.

9.3.6 Central Office (CO) Implemented Coin Line

A. Central Office Implemented Coin Line provides coin signaling. It is a line side connection from the local exchange switch to the point of demarcation at the customer premises. The line is purchased out of the company’s local tariff, while the features may be purchased out of either the local tariff or this Federal tariff.

Joe Jetensky, Manager
HunTel Communications
1605 Washington Street
Blair, NE 68008

ACCESS SERVICE

9. **Additional Engineering, Additional Labor and Miscellaneous Services** (Cont'd)

9.3 Miscellaneous Services (Cont'd)

9.3.6 Central Office (CO) Implemented Coin Line (Cont'd)

B. Features are additives to the operation of a flat rate access line that provides for CO Implemented coin line service. The Company offers those features that are provided by the functionality of the Company's switches. These include coin supervision, coin control (collect and return of coins, if applicable), and answer supervision. CO implemented coin line features that are implemented by the functionality of an operator service provider, such as coin rating, coin refund, repair referral, and operator call screening, are the responsibility of the Payphone Service Provider.

C. CO Implemented Coin Line features, including coin line signaling, coin collect and return (where applicable) and answer supervision, are provided by the Telephone Company per the technology available from the Company's facilities. It shall be the responsibility of the CO Implemented Coin Line payphone owner to assure technical and operational compatibility with the coin line features offered by the Telephone Company.

D. CO Implemented Coin Line Features include the bundled elements of answer supervision and coin collection and return. Answer Supervision provides signaling on the line notifying the line that the called party has answered. Coin Collection and Return provides an electrical signal on a CO Implemented Line indicating to the payphone equipment to collect or return coin(s) to the calling party.

Joe Jetensky, Manager
HunTel Communications
1605 Washington Street
Blair, NE 68008

ACCESS SERVICE

9. **Additional Engineering, Additional Labor and Miscellaneous Services** (Cont'd)

9.3 Miscellaneous Services (Cont'd)

9.3.7 Special Construction

A. When Special Construction is required, as described following, the provisions of this section apply in addition to regulations, rates, and charges set forth in other sections of this tariff.

B. Regulations and rates will be added to this tariff for each specific application of Special Construction. The customer will provide written authorization to the Telephone Company prior to the commencement of any Special Construction.

Special Construction is required when suitable facilities are not available to meet a customer's order for service and one or more of the following conditions exist:

- The Telephone Company has no other requirement for the facilities constructed at the customer's request;
- The customer requests that service be furnished using a type of facility, or via a route, other than that which the Telephone Company would otherwise utilize in furnishing the requested service;
- The customer requests the construction of more facilities than are required to satisfy its order for service; - The customer requests construction be expedited, resulting in added cost to the Telephone Company; and/or
- The customer requests that temporary facilities be constructed until permanent facilities are available .

ACCESS SERVICE

10. [RESERVED FOR FUTURE USE]

Joe Jetensky, Manager
HunTel Communications
1605 Washington Street
Blair, NE 68008

ACCESS SERVICE

11. Interface Groups, Transmission Specifications and Channel Interfaces

11.1 Local Transport Interface Groups

Ten Interface Groups are provided for terminating the Local Transport Entrance Facility at the customer premises. Each Interface Group provides a specified premises interface (e.g., two-wire, four-wire, DS1, etc.). Where transmission facilities permit, and at the option of the customer, the Entrance Facility may be provided with optional features as set forth in Section 11.1.1, following.

As a result of the customer's access order and the type of Telephone Company transport facilities serving the customer premises, the need for signaling conversions or two-wire to four-wire conversions, or the need to terminate digital or high frequency facilities in channel bank equipment may require that Telephone Company equipment be placed at the customer premises. For example, if a voice frequency interface is ordered by the customer and the Telephone Company facilities serving the customer premises are digital, then Telephone Company channel bank equipment must be placed at the customer premises in order to provide the voice frequency interface ordered by the customer.

Interface Group 1 is provided with Type C Transmission Specifications, and Interface Groups 2 through 10 are provided with Type A or B Transmission Specifications, depending on the Feature Group and whether the Access Service is routed directly or through an access tandem. All Interface Groups are provided with Data Transmission Parameters.

Only certain premises interfaces are available at the customer premises. The premises interfaces associated with the Interface Groups may vary among Feature Groups. The various premises interfaces, which are available with the Interface Groups, and the Feature Groups with which they may be used, are set forth in Section 11.1.1, following.

11.1.1 Interface Group 1

Interface Group 1, except as set forth in the following, provides two-wire voice frequency transmission at the point of termination at the customer's premises. The interface is capable of transmission of voice and associated telephone signals within the frequency bandwidth of approximately 300 to 3,000 Hz.

ACCESS SERVICE

11. **Interface Groups, Transmission Specifications and Channel Interfaces** (Cont'd)

11.1 Local Transport Interface Groups (Cont'd)

11.1.1 Interface Group 1 (Cont'd)

Interface Group 1 is not provided in association with FGC and FGD when the first point of switching is an access tandem. In addition, Interface Group 1 is not provided in association with FGB, FGC or FGD when the first point of switching provides only four-wire terminations.

The transmission path between the point of termination at the customer premises and the first point of switching may be comprised of any form or configuration of plant capable of and typically used in the telecommunications industry for the transmission of voice and associated telephone signals within the frequency bandwidth of 300 to 3,000 Hz.

Joe Jetensky, Manager
HunTel Communications
1605 Washington Street
Blair, NE 68008

ACCESS SERVICE

11. **Interface Groups, Transmission Specifications and Channel Interfaces** (Cont'd)

11.1 Local Transport Interface Groups (Cont'd)

11.1.1 Interface Group 1 (Cont'd)

The interface is provided with loop supervisory signaling. When the interface is associated with FGA, such signaling will be loop start or ground start signaling. When the interface is associated with FGB, FGC, or FGD such signaling, except for two-way calling which is E&M signaling, will be reverse battery signaling.

11.1.2 Interface Group 2

Interface Group 2 provides four-wire voice frequency transmission at the point of termination at the customer premises. The interface is capable of transmission of voice and associated telephone signals within the frequency bandwidth of approximately 300 to 3,000 Hz.

The transmission path between the point of termination at the customer premises and the customer's serving wire center may be comprised of any form or configuration of plant capable of, and typically used in, the telecommunications industry for the transmission of voice and associated telephone signals within the frequency bandwidth of approximately 300 to 3,000 Hz.

The interface is provided with loop supervisory signaling. When the interface is associated with FGB, FGC or FGD, such signaling, except for two-way calling which is E&M signaling, will be reverse battery signaling.

11.1.3 Interface Group 3

Interface Group 3 provides group level analog transmission at the point of termination at the customer premises. The interface is capable of transmitting electrical signals between the frequencies of 60 to 108 kHz, with the capability to channelize up to 12 voice frequency transmission paths. Certain frequencies

Joe Jetensky, Manager
HunTel Communications
1605 Washington Street
Blair, NE 68008

ACCESS SERVICE

11. **Interface Groups, Transmission Specifications and Channel Interfaces** (Cont'd)

11.1 Local Transport Interface Group (Cont'd)

11.1.3 Interface Group 3 (Cont'd)

within the bandwidth of the Interface Group are reserved for Telephone Company use, e.g., pilot and carrier group alarm tones. Before the first point of switching, the Telephone Company will provide multiplex equipment to derive 12 transmission paths of frequency bandwidth approximately 300 to 3,000 Hz.

The interface is provided with individual transmission path SF supervisory signaling.

11.1.4 Interface Group 4

Interface Group 4 provides supergroup level analog transmission at the point of termination at the customer premises. The interface is capable of transmitting electrical signals between the frequencies of 312 to 552 kHz, with the capability to channelize up to 60 voice frequency transmission paths. Certain frequencies within the bandwidth of the Interface Group are reserved for Telephone Company use, e.g., pilot and carrier group alarm tones. Before the first point of switching, the Telephone Company will provide multiplex and channel bank equipment to derive 60 transmission paths of frequency bandwidth of approximately 300 to 3,000 Hz.

The interface is provided with individual transmission path SF supervisory signaling.

11.1.5 Interface Group 5

Interface Group 5 provides master group level analog transmission at the point of termination at the customer premises.

Joe Jetensky, Manager
HunTel Communications
1605 Washington Street
Blair, NE 68008

ACCESS SERVICE

11. **Interface Groups, Transmission Specifications and Channel Interfaces** (Cont'd)

11.1 Local Transport Interface Groups (Cont'd)

11.1.5 Interface Group 5 (Cont'd)

The interface is capable of transmitting electrical signals between the frequencies of 564 to 3,084 kHz, with the capability to channelize up to 600 voice frequency transmission paths. Certain frequencies within the bandwidth of the Interface Group are reserved for Telephone Company use, e.g., pilot and carrier group alarm tones. Before the first point of switching, the Telephone Company will provide multiplex and channel bank equipment to derive 600 transmission paths of frequency bandwidth of approximately 300 to 3,000 Hz.

The interface is provided with individual transmission path SF supervisory signaling.

11.1.6 Interface Group 6

Interface Group 6 provides DS1 level digital transmission at the point of termination at the customer premises. The interface is capable of transmitting electrical signals at a nominal 1.544 MBPS, with the capability to channelize up to 24 voice frequency transmission paths. Before the first point of switching, when analog switching utilizing analog terminations is provided, the Telephone Company will provide multiplex and channel bank equipment to derive 24 transmission paths of a frequency bandwidth of approximately 300 to 3,000 Hz. When digital switching or analog switching with digital carrier terminations is provided, the Telephone Company will provide a DS1 signal in D3/D4 format.

The interface is provided with individual transmission path bit stream supervisory signaling.

ACCESS SERVICE

11. **Interface Groups, Transmission Specifications and Channel Interfaces** (Cont'd)

11.1 Local Transport Interface Groups (Cont'd)

11.1.7 Interface Group 7

Interface Group 7 provides DS1C level digital transmission at the point of termination at the customer premises. The interface is capable of transmitting electrical signals at a nominal 3.152 MBPS, with the capability to channelize up to 48 voice frequency transmission paths. Before the first point of switching, when analog switching utilizing analog terminations is provided, the Telephone Company will provide multiplex and channel bank equipment to derive up to 48 voice frequency transmission paths of a frequency bandwidth of approximately 300 to 3,000 Hz. When digital switching or analog switching with digital carrier terminations is provided, the Telephone Company will provide DS1 signals in D3/D4 format.

The interface is provided with individual transmission path bit stream supervisory signaling.

11.1.8 Interface Group 8

Interface Group 8 provides DS2 level digital transmission at the point of termination at the customer premises. The interface is capable of transmitting electrical signals at a nominal 6.312 MBPS, with the capability to channelize up to 96 voice frequency transmission paths. Before the first point of switching, when analog switching utilizing analog terminations is provided, the Telephone Company will provide multiplex and channel bank equipment in its office to derive up to 96 transmission paths of a frequency bandwidth of approximately 300 to 3,000 Hz. When digital switching or analog switching with digital carrier terminations is provided, the Telephone Company will provide DS1 signals in D3/D4 format.

Joe Jetensky, Manager
HunTel Communications
1605 Washington Street
Blair, NE 68008

ACCESS SERVICE

11. **Interface Groups, Transmission Specifications and Channel Interfaces** (Cont'd)

11.1 Local Transport Interface Groups (Cont'd)

11.1.8 Interface Group 8 (Cont'd)

The interface is provided with individual transmission path bit stream supervisory signaling.

11.1.9 Interface Group 9

Interface Group 9 provides DS3 level digital transmission at the point of termination at the customer premises. The interface is capable of transmitting electrical signals at a nominal 44.736 MBPS, with the capability to channelize up to 672 voice frequency transmission paths. Before the first point of switching, when analog switching utilizing analog terminations is provided, the Telephone Company will provide multiplex and channel bank equipment to derive up to 672 transmission paths of a frequency bandwidth of approximately 300 to 3,000 Hz. When digital switching or analog switching with digital carrier terminations is provided, the Telephone Company will provide, DS1 signals in D3/D4 format.

The interface is provided with individual transmission path bit stream supervisory signaling.

11.1.10 Interface Group 10

Interface Group 10 provides DS4 level digital transmission at the point of termination at the customer premises. The interface is capable of transmitting electrical signals at a nominal 274.176 MBPS, with the capability to channelize up to 4,032 voice frequency transmission paths. Before the first point of switching, when analog switching utilizing analog terminations is provided,

ACCESS SERVICE

11. **Interface Groups, Transmission Specifications and Channel Interfaces** (Cont'd)

11.1 Local Transport Interface Groups (Cont'd)

11.1.10 Interface Group 10 (Cont'd)

the Telephone Company will provide multiplex and channel bank equipment to derive up to 4,032 transmission paths of a frequency bandwidth of approximately 300 to 3,000 Hz. When digital switching or analog switching with digital carrier terminations is provided, the Telephone Company will provide, DS1 signals in D3/D4 format. The interface is provided with individual transmission path bit stream supervisory signaling.

Joe Jetensky, Manager
HunTel Communications
1605 Washington Street
Blair, NE 68008

ACCESS SERVICE

11. **Interface Groups, Transmission Specifications and Channel Interfaces** (Cont'd)

11.1 Local Transport Interface Groups (Cont'd)

11.1.11 Available Premises Interface Codes

Following is a matrix showing, for each Interface Group, which premises interface codes are available as a function of the Telephone Company switch supervisory signaling and Feature Group. For explanations of these codes, see the Glossary of Channel Interface Codes in Section 11.3, following.

Interface Group	Telephone Company Switch Supervisory Signaling	Premises Interface Code	Feature Group A	B	C	D
1	LO	2LS2	X			
	LO	2LS3	X			
	GO	2GS2	X			
	GO	2GS3	X			
	LO, GO	2DX3	X			
	LO, GO	4EA3-E	X			
	LO, GO	4EA3-M	X			
	LO, GO	6EB3-E	X			
	LO, GO	6EB3-M	X			
	RV, EA, EB, EC	2DX3		X	X	X
	RV, EA, EB, EC	4EA3-E		X	X	X
	RV, EA, EB, EC	4EA3-M		X	X	X
	RV, EA, EB, EC	6EB3-E		X	X	X
	RV, EA, EB, EC	6EB3-M		X	X	X
	EA, EB, EC	6EC3			X	X
	RV	2RV3-0		X	X	X
	RV	2RV3-T		X	X	X

Joe Jetensky, Manager
HunTel Communications
1605 Washington Street
Blair, NE 68008

ACCESS SERVICE

11. **Interface Groups, Transmission Specifications and Channel Interfaces** (Cont'd)

11.1 Local Transport Interface Groups (Cont'd)

11.1.11 Available Premises Interface Codes (Cont'd)

Interface Group	Telephone Company Switch Supervisory Signaling	Premises Interface Code	Feature Group A	B	C	D
2	LO, GO	4SF2	X			
	LO, GO	4SF3	X			
	LO	4LS2	X			
	LO	4LS3	X			
	LO	6LS2	X			
	GO	4GS2	X			
	GO	4GS3	X			
	GO	6GS2	X			
	LO, GO	4DX2	X			
	LO, GO	4DX3	X			
	LO, GO	6EA2-E	X			
	LO, GO	6EA2-M	X			
	LO, GO	8EB2-E	X			
	LO, GO	8EB2-M	X			
	LO, GO	6EX2-B	X			
	RV, EA, EB, EC	4SF2		X	X	X
	RV, EA, EB, EC	4SF3		X		
	RV, EA, EB, EC	4DX2		X	X	X
	RV, EA, EB, EC	4DX3		X		
	RV, EA, EB, EC	6DX2			X	
	RV, EA, EB, EC	6EA2-E		X	X	X
	RV, EA, EB, EC	6EA2-M		X	X	X
	RV, EA, EB, EC	8EB2-E		X	X	X
	RV, EA, EB, EC	8EB2-M		X	X	X
	EA, EB, EC	8EC2-M			X	X
	RV	4RV2-O		X	X	X
	RV	4RV2-T		X	X	X
	RV	4RV3-O		X	X	
	RV	4RV3-T		X	X	

Joe Jetensky, Manager
HunTel Communications
1605 Washington Street
Blair, NE 68008

ACCESS SERVICE

11. **Interface Groups, Transmission Specifications and Channel Interfaces** (Cont'd)

11.1 Local Transport Interface Groups (Cont'd)

11.1.11 Available Premises Interface Codes (Cont'd)

Interface Group	Telephone Company Switch Supervisory Signaling	Premises Interface Code	Feature Group A	B	C	D
3	LO, GO	4AH5-B	X			
	RV, EA, EB, EC	4AH5-B		X	X	X
4	LO, GO	4AH6-C	X			
	RV, EA, EB, EC	4AH6-C		X	X	X
5	LO, GO	4AH6-D	X			
	RV, EA, EB, EC	4AH6-D		X	X	X
6	LO, GO	4DS9-15	X			
	LO, GO	4DS9-15L	X			
	RV, EA, EB, EC	4DS9-15		X	X	X
	RV, EA, EB, EC	4DS9-15L		X	X	X
	SS7	4DS9-15L			X	X
7	LO, GO	4DS9-31	X			
	RV, EA, EB, EC	4DS9-31		X	X	X
	LO, GO	4DS9-31L	X			
	RV, EA, EB, EC	4DS9-31L		X	X	X
	SS7	4DS9-31			X	X

Joe Jetensky, Manager
HunTel Communications
1605 Washington Street
Blair, NE 68008

ACCESS SERVICE

11. **Interface Groups, Transmission Specifications and Channel Interfaces** (Cont'd)

11.1 Local Transport Interface Groups (Cont'd)

11.1.11 Available Premises Interface Codes (Cont'd)

Interface Group	Telephone Company Switch Supervisory Signaling	Premises Interface Code	Feature Group A	B	C	D
8	LO, GO	4DS0-63	X			
	LO, GO	4DS0-63L	X			
	RV, EA, EB, EC	4DSO-63		X	X	X
	RV, EA, EB, EC	4DS0-63L		X	X	X
	SS7	4DS0-63			X	X
9	LO, GO	4DS6-44	X			
	LO, GO	4DS6-44L	X			
	RV, EA, EB, EC	4DS6-44		X	X	X
	RV, EA, EB, EC	4DS6-44L		X	X	X
	SS7	4DS6-44			X	X
10	LO, GO	4DS6-27	X			
	LO, GO	4DS6-27L	X			
	RV, EA, EB, EC	4DS6-27		X	X	X
	RV, EA, EB, EC	4DS6-27L		X	X	X

11.1.12 Supervisory Signaling

- For Interface Groups 1 and 2:

  DX Supervisory Signaling,
  E&M Type I Supervisory Signaling,
  E&M Type II Supervisory Signaling, or
  E&M Type III Supervisory Signaling

- For Interface Group 2:

  SF Supervisory Signaling, or
  Tandem Supervisory Signaling

Joe Jetensky, Manager
HunTel Communications
1605 Washington Street
Blair, NE 68008

ACCESS SERVICE

11. **Interface Groups, Transmission Specifications and Channel Interfaces** (Cont'd)

11.1 Local Transport Interface Groups (Cont'd)

11.1.12 Supervisory Signaling (Cont'd)

- For Interface Groups 6 through 10

These Interface Groups may be provided with individual transmission path SF supervisory signaling where such signaling is available in Telephone Company central offices. Generally, such signaling is available only where the entry switch provides an analog, i.e., non-digital, interface to the transport termination, and is not available in combination with the SS7 Signaling option.

11.2 Transmission Specifications Switched Access Service

11.2.1 Standard Transmission Specifications

Following are descriptions of the three Standard Transmission Specifications available with Switched Access Service Feature Groups. The specific applications in terms of the Feature Groups and Interface Groups with which the Feature Group Standard Transmission Specifications are provided are set forth in Section 6.4, preceding.

(A) Type A Transmission Specifications

Type A Transmission Specifications are provided with the following parameters:

(1) Loss Deviation

The maximum Loss Deviation of the 1,004 Hz loss relative to the Expected Measured Loss (EML) is ± 2.0 dB.

(2) Attenuation Distortion

The maximum Attenuation Distortion in the 404 to 2,804 Hz frequency band relative to the loss at 1,004 Hz is -1.0 dB to +3.0 dB.

Joe Jetensky, Manager
HunTel Communications
1605 Washington Street
Blair, NE 68008

ACCESS SERVICE

11. **Interface Groups, Transmission Specifications and Channel Interfaces** (Cont'd)

11.2 Transmission Specifications Switched Access Service (Cont'd)

11.2.1 Standard Transmission Specifications (Cont'd)

(A) Type A Transmission Specifications (Cont'd)

(3) C-Message Noise

The maximum C-Message Noise for the transmission path at the route miles listed is less than or equal to:

Route Miles	C-Message Noise
less than 50	32 dBrnCO
51 to 100	34 dBrnCO
101 to 200	37 dBrnCO
201 to 400	40 dBrnCO
401 to 1,000	42 dBrnCO

(4) C-Notch Noise

The maximum C-Notch Noise, utilizing a -16 dBmO holding tone, is less than or equal to 45 dBrnCO.

Joe Jetensky, Manager
HunTel Communications
1605 Washington Street
Blair, NE 68008

ACCESS SERVICE

11. **Interface Groups, Transmission Specifications and Channel Interfaces** (Cont'd)

11.2 Transmission Specifications Switched Access Service (Cont'd)

11.2.1 Standard Transmission Specifications (Cont'd)

(A) Type A Transmission Specifications (Cont'd)

(5) Echo Control

Echo Control, identified as Equal Level Echo Path Loss, and expressed as Echo Return Loss and Singing Return Loss, is dependent on the routing, i.e., whether the service is routed directly from the customer's point of termination (POT) to the end office or via an access tandem. It is equal to or greater than the following:

	Echo Return Loss	Singing Return Loss
POT to Access Tandem	21 dB	14 dB
POT to End Office		
- Direct	N/A	N/A
- Via Access Tandem	16 dB	11 dB

Joe Jetensky, Manager
HunTel Communications
1605 Washington Street
Blair, NE 68008

ACCESS SERVICE

11. **Interface Groups, Transmission Specifications and Channel Interfaces** (Cont'd)

11.2 Transmission Specifications Switched Access Service (Cont'd)

11.2.1 Standard Transmission Specifications (Cont'd)

(A) Type A Transmission Specifications (Cont'd)

(6) Standard Return Loss

Standard Return Loss expressed as Echo Return Loss and Singing Return Loss on two-wire ports of a four-wire point of termination shall be equal to or greater than:

Echo Return Loss	Singing Return Loss
5 dB	2.5 dB

(B) Type B Transmission Specifications

Type B Transmission Specifications are provided with the following parameters:

(1) Loss Deviation

The maximum Loss Deviation of the 1,004 Hz loss relative to the Expected Measured Loss (EML) is plus or minus 2.5 dB.

(2) Attenuation Distortion

The maximum Attenuation Distortion in the 404 to 2,804 Hz frequency band relative to loss at 1,004 Hz is -2.0 dB to +4.0 dB.

(3) C-Message Noise

The maximum C-Message Noise for the transmission path at the route miles listed is less than or equal to:

Joe Jetensky, Manager
HunTel Communications
1605 Washington Street
Blair, NE 68008

ACCESS SERVICE

11. **Interface Groups, Transmission Specifications and Channel Interfaces** (Cont'd)

11.2 Transmission Specifications Switched Access Service (Cont'd)

11.2.1 Standard Transmission Specifications (Cont'd)

(B) Type B Transmission Specifications (Cont'd)

(3) C-Message Noise (Cont'd)

C-Message Noise*

Route Miles	Type B2	Type B1
less than 50	35 dBrnCO	32 dBrnCO
51 to 100	37 dBrnCO	33 dBrnCO
101 to 200	40 dBrnCO	35 dBrnCO
201 to 400	43 dBrnCO	37 dBrnCO
401 to 1,000	45 dBrnCO	39 dBrnCO

(4) C-Notch Noise

The maximum C-Notch Noise, utilizing a -16 dBm0 holding tone is less than or equal to 47 dBrnCO.

(5) Echo Control

Echo Control, identified as Equal Level Echo Path Loss for FGC and FGD and expressed as Echo Return Loss (ERL) and Singing Return Loss (SRL), is dependent on the routing, i.e., whether the service is routed directly from the customer's point of termination (POT) to the end office or via an access tandem. The ERL and SRL also differ by Feature Group, type of termination, and type of transmission path. They are greater than or equal to the following:

* For Feature Group C and D only Type B2 will be provided. For Feature Groups A and B, Type B1 or B2 will be provided as set forth in Technical Reference TR-NPL-000336.

Joe Jetensky, Manager
HunTel Communications
1605 Washington Street
Blair, NE 68008

ACCESS SERVICE

11. **Interface Groups, Transmission Specifications and Channel Interfaces** (Cont'd)

11.2 Transmission Specifications Switched Access Service (Cont'd)

11.2.1 Standard Transmission Specifications (Cont'd)

(B) Type B Transmission Specifications (Cont'd)

(5) Echo Control (Cont'd)

	Echo Return Loss	Singing Return Loss
POT to Access Tandem		
- Terminated in 4-Wire trunk	21 dB	14 dB
- Terminated in 2-Wire trunk	16 dB	11 dB
POT to End Office		
- Direct	16 dB	11 dB
- Via Access Tandem		
- For FGB access	8 dB	4 dB
- For FGC access (Effective 4-wire transmission path at end office)	16 dB	11 dB
- For FGC access (Effective 2-Wire transmission path at end office)	13 dB	6 dB

Joe Jetensky, Manager
HunTel Communications
1605 Washington Street
Blair, NE 68008

ACCESS SERVICE

11. **Interface Groups, Transmission Specifications and Channel Interfaces** (Cont'd)

11.2 Transmission Specifications Switched Access Service (Cont'd)

11.2.1 Standard Transmission Specifications (Cont'd)

(B) Type B Transmission Specifications (Cont'd)

(6) Standard Return Loss

Standard Return Loss, expressed as Echo Return Loss and Singing Return Loss, on two-wire ports of a four-wire point of termination shall be equal to or greater than:

Echo Return Loss	Singing Return Loss
5 dB	2.5 dB

Joe Jetensky, Manager
HunTel Communications
1605 Washington Street
Blair, NE 68008

ACCESS SERVICE

11. **Interface Groups, Transmission Specifications and Channel Interfaces** (Cont'd)

11.2 Transmission Specifications Switched Access Service (Cont'd)

11.2.1 Standard Transmission Specifications (Cont'd)

(C) Type C Transmission Specifications

Type C Transmission Specifications are provided with the following parameters:

(1) Loss Deviation

The maximum Loss Deviation of the 1,004 Hz loss relative to the Expected Measured Loss (EML) is plus or minus 3.0 dB.

(2) Attenuation Distortion

The maximum Attenuation Distortion in the 404 to 2,804 Hz frequency band relative to loss at 1,004 Hz is -2.0 dB to +5.5 dB.

(3) C-Message Noise

The maximum C-Message Noise for the transmission path at the route miles listed is less than or equal to:

	C-Message Noise*	
Route Miles	Type C2	Type C1
less than 50	38 dBrnCO	32 dBrnCO
51 to 100	39 dBrnCO	33 dBrnCO
101 to 200	41 dBrnCO	35 dBrnCO
201 to 400	43 dBrnCO	37 dBrnCO
401 to 1,000	45 dBrnCO	39 dBrnCO

* For Feature Group C and D, only type C2 will be provided. For Feature Groups A and B, Type C1 or C2 will be provided as set forth in Technical Reference TR-NPL-000336.

Joe Jetensky, Manager
HunTel Communications
1605 Washington Street
Blair, NE 68008

ACCESS SERVICE

11. **Interface Groups, Transmission Specifications and Channel Interfaces** (Cont'd)

11.2 Transmission Specifications Switched Access Service (Cont'd)

11.2.1 Standard Transmission Specifications (Cont'd)

(C) Type C Transmission Specifications (Cont'd)

(4) C-Notch Noise

The maximum C-Notch Noise, utilizing a -16 dBm0 holding tone is less than or equal to 47 dBrnCO.

(5) Echo Control

Echo Control, identified as Return Loss and expressed as Echo Return Loss is dependent on the routing, i.e., whether the service is routed directly from the customer's point of termination (POT) to the end office or via an access tandem. It is equal to or greater than the following:

	Echo Return Loss	Singing Return Loss
POT to Access Tandem	13 dB	6 dB
Pot to End Office		
- Direct	13 dB	6 dB
- Via Access Tandem (for FGB only)	8 dB	4 dB

11.2.2 Data Transmission Parameters

Two types of Data Transmission Parameters, i.e., Type DA and Type DB, are provided for the Feature Group arrangements. The specific applications in terms of the Feature Groups with which they are provided are set forth in Section 6.4, preceding. Following are descriptions of each.

ACCESS SERVICE

11. **Interface Groups, Transmission Specifications and Channel Interfaces** (Cont'd)

11.2 Transmission Specifications Switched Access Service (Cont'd)

11.2.2 Data Transmission Parameters (Cont'd)

(A) Data Transmission Parameters Type DA

(1) Signal to C-Notched Noise Ratio

The Signal to C-Notched Noise Ratio is equal to or greater than 33 dB.

(2) Envelope Delay Distortion

The maximum Envelope Delay Distortion for the frequency bands and route miles specified is:

604 to 2,804 Hz	
Less than 50 route miles	500 microseconds
equal to or greater than 50 route miles	900 microseconds

1,004 to 2,404 Hz	
less than 50 route miles	200 microseconds
equal to or greater than 50 route miles	400 microseconds

(3) Impulse Noise Counts

The Impulse Noise Counts exceeding a 65 dBrnCO threshold in 15 minutes is no more than 15 counts.

(4) Intermodulation Distortion

The Second Order (R2) and Third Order (R3) Intermodulation Distortion products are equal to or greater than:

Second Order (R2)	33 dB
Third Order (R3)	37 dB

Joe Jetensky, Manager
HunTel Communications
1605 Washington Street
Blair, NE 68008

ACCESS SERVICE

11. **Interface Groups, Transmission Specifications and Channel Interfaces** (Cont'd)

11.2 Transmission Specifications Switched Access Service (Cont'd)

11.2.2 Data Transmission Parameters (Cont'd)

(A) Data Transmission Parameters Type DA (Cont'd)

(5) Phase Jitter

The Phase Jitter over the 4-300 Hz frequency band is less than or equal to 5 degrees peak-to-peak.

(6) Frequency Shift

The maximum Frequency Shift does not exceed -2 to +2 Hz.

(B) Data Transmission Parameters Type DB

(1) Signal to C-Notched Noise Ratio

The signal to C-Notched Noise Ratio is equal to or greater than 30 dB.

(2) Envelope Delay Distortion

The maximum Envelope Delay Distortion for the frequency bands and route miles specified is:

604 to 2,804 Hz	
less than 50 route miles	800 microseconds
equal to or greater than 50 route miles	1,000 microseconds

1,004 to 2,404 Hz	
less than 50 route miles	320 microseconds
equal to or greater than 50 route miles	500 microseconds

Joe Jetensky, Manager
HunTel Communications
1605 Washington Street
Blair, NE 68008

ACCESS SERVICE

11. **Interface Groups, Transmission Specifications and Channel Interfaces** (Cont'd)

11.2 Transmission Specifications Switched Access Service (Cont'd)

11.2.2 Data Transmission Parameters (Cont'd)

(B) Data Transmission Parameters Type DB (Cont'd)

(3) Impulse Noise Counts

The Impulse Noise Counts exceeding a 67 dBrnCO threshold in 15 minutes is no more than 15 counts.

(4) Intermodulation Distortion

The Second Order (R2) and Third Order (R3) Intermodulation Distortion products are equal to or greater than:

Second Order (R2)	31 dB
Third Order (R3)	34 dB

(5) Phase Jitter

The Phase Jitter over the 4-300 Hz frequency band is less than or equal to 7 degrees peak-to-peak.

(6) Frequency Shift

The maximum Frequency Shift does not exceed -2 to +2 Hz.

11.3 Special Access Channel Interface and Network Channel Codes

This section explains the Channel Interface Codes and Network Channel Codes that the customer must specify when ordering Special Access Service, Switched Access Entrance Facilities, and Voice Grade and High Capacity Direct Trunked Transport. Included is an example which explains the specific characters of the code, a glossary of Channel Interface Codes, impedance levels, Network Channel Codes and compatible Channel Interfaces.

Joe Jetensky, Manager
HunTel Communications
1605 Washington Street
Blair, NE 68008

ACCESS SERVICE

11. **Interface Groups, Transmission Specifications and Channel Interfaces** (Cont'd)

11.3 Special Access Channel Interface and Network Channel Codes Cont'd)

When ordering, the type of Special Access Service or Switched Access Entrance Facility or Direct Trunked Transport is described by two code sets, the Network Channel (NC) Code and the Network Channel Interface (NCI) Codes.

The Network Channel (NC) Code consists of two elements. Element one is a Channel Service Code (character positions 1 and 2) that describes the channel service type in an abbreviated form. Element two is an Optional Feature Code (character positions 3 and 4) that identifies option codes available for each channel service code, such as C-conditioning or Improved Return Loss.

The Network Channel Interface (NCI) is used to identify interface specification associated with a particular channel. This code describes the total wires, protocol, impedance, protocol options and transmission level point(s) reflecting physical and electrical characteristics between the Telephone Company and the customer.

Example: If the customer wants to order a 1.544 Mbps Hi-cap facility with no channel options such as CO multiplexing, the customer might specify the following:

ACCESS SERVICE

11. **Interface Groups, Transmission Specifications and Channel Interfaces** (Cont'd)

11.3 Special Access Channel Interface and Network Channel Codes (Cont'd)

HC =	High Capacity Channel Service, HC1
-- =	No Optional Features
04 =	Number of physical wires at customer premises
DS =	Digital hierarchy interface
9 =	100 Ohms impedance
15 =	1.544 Mbps (DS1) format

11.3.1 Glossary of Channel Interface Codes and Options

Code	Option	Definition
AB -		accepts 20 Hz ringing signal at customer's point of termination
AC -		accepts 20 Hz ringing signal at customer's end user's point of termination
CT -		Centrex Tie Trunk Termination
DA -		data stream in VF frequency band at customer's end user's point of termination
DB -		data stream in VF frequency band at customer's point of termination
-	10	VF for TG1 and TG2
-	43	VF for 43 Telegraph Carrier type signals, TG1 and TG2
DC -		direct current or voltage
-	1	monitoring interface with services RC combination (McCulloh format)
-	2	Telephone Company energized alarm channel

Joe Jetensky, Manager
HunTel Communications
1605 Washington Street
Blair, NE 68008

ACCESS SERVICE

11. **Interface Groups, Transmission Specifications and Channel Interfaces** (Cont'd)

11.3 Special Access Channel Interface and Network Channel Codes (Cont'd)

11.3.1 Glossary of Channel Interface Codes and Options (Cont'd)

Code	Option	Definition
DD -		DATAPHONE Select-A-Station (and TABS) interface at customer's point of termination
DE -		DATAPHONE Select-A-Station (and TABS) interface at the customer's end user's point of termination
DS -		Digital hierarchy interface
-	15	1.544 Mbps (DS1) format per PUB 62411 plus D4
-	15E	8-bit PCM encoded in one 64 kbps of the DS1 signal
-	15F	8-bit PCM encoded in two 64 kbps of the DS1 signal
-	15G	8-bit PCM encoded in three 64 kbps of the DS1 signal
-	15H	14/11-bit PCM encoded in six 64 kbps of the DS1 signal
-	15J	1.544 MBPS format per PUB 62411
-	15K	1.544 MBPS format per PUB 62411 plus extended framing format
-	15L	1.544 MBPS (DS1) with SF signaling
-	27	274.176 MBPS (DS4)
-	27L	274.176 MBPS (DS4) with SF signaling
-	31	3.152 MBPS (DS1C)
-	31L	3.152 MBPS (DS1C) with SF signaling
-	44	44.736 MBPS (DS3)
-	44L	44.736 MBPS (DS3) with SF signaling
-	63	6.312 MBPS (DS2)
-	63L	6.312 MBPS (DS2) with SF signaling
DU -		Digital access interface
-	24	2.4 kbps

Joe Jetensky, Manager
HunTel Communications
1605 Washington Street
Blair, NE 68008

ACCESS SERVICE

11. **Interface Groups, Transmission Specifications and Channel Interfaces** (Cont'd)

11.3 Special Access Channel Interface and Network Channel Codes (Cont'd)

11.3.1 Glossary of Channel Interface Codes and Options (Cont'd)

Code	Option	Definition
-	48	4.8 kbps
-	56	56.0 kbps
-	96	9.6 kbps
-	A	1.544 MBPS format per PUB 62411
-	B	1.544 MBPS format per PUB 62411 plus D4
-	C	1.544 MBPS format per PUB 62411 plus extended farming format
DX -		duplex signaling interface at customer's point of termination
DY -		duplex signaling interface at customer's end user's point of termination
EA -	E	Type I E&M Lead Signaling. Customer at POT or customer's end user at POT originates on E Lead.
EA -	M	Type I E&M Lead Signaling. Customer at POT or customer's end user at POT originates on M Lead.
EB -	E	Type II E&M Lead Signaling. Customer at POT or customer's end user at POT originates on E Lead.
EB -	M	Type II E&M Lead Signaling. Customer at POT or customer's end user at POT originates on M Lead.
EC -		Type III E&M signaling at customer POT
EX -	A	tandem channel unit signaling for loop start or ground start and customer supplies open end (dial tone, etc.) functions.
EX -	B	tandem channel unit signaling for loop start or ground start and customer supplies closed end (dial pulsing, etc.) functions.

Joe Jetensky, Manager
HunTel Communications
1605 Washington Street
Blair, NE 68008

ACCESS SERVICE

11. **Interface Groups, Transmission Specifications and Channel Interfaces** (Cont'd)

11.3 Special Access Channel Interface and Network Channel Codes (Cont'd)

11.3.1 Glossary of Channel Interface Codes and Options (Cont'd)

Code	Option	Definition
GO -		Ground start loop signaling - open end function by customer or customer's end user.
GS -		Ground start loop signaling - closed end function by customer or customers end user.
IA -		E.I.A. (25 pin RS-232)
LA -		end user loop start loop signaling - Type A OPS registered port open end.
LB -		end user loop start loop signaling - Type B OPS registered port open end.
LC -		end user loop start loop signaling - Type C OPS registered port open end.
LO -		loop start loop signaling - open end function by customer or customer's end user.
LR -		20 Hz automatic ringdown interface at customer with Telephone Company provided PLAR.
LS -		loop start loop signaling - closed end function by customer or customer's end user
NO -		no signaling interface, transmission only.
PG -		program transmission - no dc signaling.
-	1	nominal frequency from 50 to 15,000 Hz.
-	3	nominal frequency from 200 to 3,500 Hz.
-	5	nominal frequency from 100 to 5,000 Hz.
-	8	nominal frequency from 50 to 8,000 Hz.
PR		protective relaying*.

* Available only for the transmission of audio tone protective relaying signals used in the protection of electric power systems during fault conditions.

Joe Jetensky, Manager
HunTel Communications
1605 Washington Street
Blair, NE 68008

ACCESS SERVICE

11. **Interface Groups, Transmission Specifications and Channel Interfaces** (Cont'd)

11.3 Special Access Channel Interface and Network Channel Codes (Cont'd)

11.3.1 Glossary of Channel Interface Codes and Options (Cont'd)

Code	Option	Definition
RV -	0	reverse battery signaling, one way operation, originate by customer.
-	T	reverse battery signaling, one way operation, terminate function by customer or customer's end user.
SF -		single frequency signaling with VF band at either customer POT or customer's end user POT.
TF -		telephotograph interface.
TT -		telegraph/teletypewriter interface at either customer POT or customers end user POT.
-	2	20.0 milliamperes.
-	3	3.0 milliamperes.
-	6	62.5 milliamperes.
TV -		television interface.
-	1	combined (diplexed) video and one audio signal.
-	2	combined (diplexed) video and two audio signals.
-	5	video plus one (or two) audio 5 kHz signal(s) or one (or two) two-wire.
-	15	video plays one (or two) audio 15 kHz signal(s).

Joe Jetensky, Manager
HunTel Communications
1605 Washington Street
Blair, NE 68008

ACCESS SERVICE

11. **Interface Groups, Transmission Specifications and Channel Interfaces** (Cont'd)

11.3 Special Access Channel Interface and Network Channel Codes (Cont'd)

11.3.2 Impedance

The nominal reference impedance with which the channel will be terminated for the purpose of evaluating transmission performance:

Value (ohms)	Code(s)
110	0
150	1
600	2
900	3+
135	5
75	6
124	7
Variable	8
100	9

\+ For those interface codes with a 4-wire transmission path at the customer POT, rather than a standard 900 ohm impedance the code (3) denotes a customer provided transmission equipment termination. Such terminations were provided to customers in accordance with the F.C.C. Docket No. 20099 Settlement Agreement.

Joe Jetensky, Manager
HunTel Communications
1605 Washington Street
Blair, NE 68008

ACCESS SERVICE

11. **Interface Groups, Transmission Specifications and Channel Interfaces** (Cont'd)

11.3 Special Access Channel Interface and Network Channel Codes (Cont'd)

11.3.3 Digital Hierarchy Channel Interface Codes (4DS)

Customers selecting the multiplexed four-wire DSX-1 or higher facility interface option at the customer premises will be requested to provide subsequent system and channel assignment data. The various digital bit rates in the digital hierarchy employ the channel interface code 4DS8, 4DS0 or 4DS6 plus the speed options indicated below:

Interface Code and Speed Option	Nominal Bit Rate (MBPS)	Digital Hierarchy Level
4DS8-15	1.544	DS1
4DS8-31	3.152	DS1C
4DS0-63	6.312	DS2
4DS6-44	44.736	DS3
4DS6-27	274.176	DS4

11.3.4 Service Designator/Network Channel Code Conversion Table

The purpose of this table is to show the relationship between the service designator codes (e.g., VGC, MT2, etc.) and the network channel codes that are used for:

Service Designator Code	Network Channel Code
MTC	MQ
MT1	NT
MT2	NU
MT3	NV
TGC	NQ
TG1	NW
TG2	NY
VGC	LQ
VGW	SE
VG1	LB

Joe Jetensky, Manager
HunTel Communications
1605 Washington Street
Blair, NE 68008

ACCESS SERVICE

11. **Interface Groups, Transmission Specifications and Channel Interfaces** (Cont'd)

11.3 Special Access Channel Interface and Network Channel Codes (Cont'd)

11.3.4 Service Designator/Network Channel Code Conversion Table (Cont'd)

Service Designator Code	Network Channel Code
VG2	LC
VG3	LD
VG4	LE
VG5	LF
VG6	LG
VG7	LH
VG8	LJ
VG9	LK
VG10	LN
VG11	LP
VG12	LR
APC	PQ
AP1	PE
AP2	PF
AP3	PJ
AP4	PK
TVC	TQ
TV1	TV
TV2	TW
DA1	XA
DA2	XB
DA3	XG
DA4	XH
HCO	HS
HC1	HC
HC1C	HD
HC2	HE
HC3	HF
HC4	HG

Joe Jetensky, Manager
HunTel Communications
1605 Washington Street
Blair, NE 68008

ACCESS SERVICE

11. **Interface Groups, Transmission Specifications and Channel Interfaces** (Cont'd)

11.3 Special Access Channel Interface and Network Channel Codes (Cont'd)

11.3.5 Compatible Channel Interfaces

The following tables show the channel interface codes (CIs) which are compatible:

(A) Reserved for future use.

* See Section 11.3.3, preceding, for explanation.

Joe Jetensky, Manager
HunTel Communications
1605 Washington Street
Blair, NE 68008

ACCESS SERVICE

11. **Interface Groups, Transmission Specifications and Channel Interfaces** (Cont'd)

11.3 Special Access Channel Interface and Network Channel Codes (Cont'd)

11.3.5 Compatible Channel Interfaces (Cont'd)

(B) Voice Grade

Compatible CIs		Compatible CIs		Compatible CIs	
2AB2	2AC2	2DB2	2DA2	2LR2	2LR2
2AB3	2AC2	2DB3	2DA2	2LR3	2LR2
2CT3	2DY2	2DX3	2LA2	2LS2	2LA2
	4DS8*		2LB2		2LB2
	4DX2		2LC2		2LC2
	4DX3		2LO3		
	4DY2		2LS2	2LS3	2LA2
	4EA2-E		2LS3		2LB2
	4EA2-M				2LC2
	4SF2	2GO2	2GS2		
	4SF3		2GS3	2NO2	2DA2
	6DX2				2NO2
	6DY2	2GO3	2GS2		
	6DY3		2GS3	2NO3	2NO2
	6EA2-E				2PR2
	6EA2-M	2LO2	2LS2		
	6EB2-E		2LS3	2TF3	2TF2
	6EB2-M				
	6EB3-E	2LO3	2LS2		
	8EB2-E		2LS3		
	8EB2-M				
	8EC2				
	9DY2				
	9DY3				
	9EA2				
	9EA3				

* See Section 11.3.3, preceding, for explanation.

Joe Jetensky, Manager
HunTel Communications
1605 Washington Street
Blair, NE 68008

ACCESS SERVICE

11. **Interface Groups, Transmission Specification and Channel Interfaces** (Cont'd)

11.3 Special Access Channel Interface and Network Channel Codes (Cont'd)

11.3.5 Compatible Channel Interfaces (Cont'd)

(B) Voice Grade (Cont'd)

Compatible Cis

4AB2	2AC2
	4AB2
	4AC2
	4SF2
4AB3	2AC2
	4AC2
	4SF2
4AC2	2AC2
	4AC2

Joe Jetensky, Manager
HunTel Communications
1605 Washington Street
Blair, NE 68008

ACCESS SERVICE

11. **Interface Groups, Transmission Specifications and Channel Interfaces** (Cont'd)

11.3 Special Access Channel Interface and Network Channel Codes (Cont'd)

11.3.5 Compatible Channel Interfaces (Cont'd)

(B) Voice Grade (Cont'd)

Compatible CIs		Compatible CIs	Compatible CIs
		4DS8-*2AC2	4DS8-*4DG2
		2DA2	4LR2
		2DY2	4LS2
		2GO2	4NO2
4DA2	4DA2	2GO3	4PR2
		2GS2	4RV2-T
4DB2	2DA2	2GS3	4SF2
	2NO2	2LA2	4SF3
	2PR2	2LB2	4TF2
	4DA2	2LC2	6DA2
	4DB2	2LO2	6DY2
	4NO2	2LO3	6DY3
	4PR2	2LR2	6EA2-E
	6DA2	2LS2	6EA2-M
		2LS3	6EB2-E
4DD3	2DE2	2NO2	6EB2-M
	4DE2	2PR2	6GS2
		2RV2-T	6LS2
		2TF2	8EB2-E
		4AC2	8EB2-M
		4DA2	9DY2
		4DE2	9DY3
		4DX2	9EA2
		4DX3	9EA3
		4DY2	
		4EA2-E	
		4EA2-M	

* See Section 11.3.3, preceding, for explanation.

Joe Jetensky, Manager
HunTel Communications
1605 Washington Street
Blair, NE 68008

ACCESS SERVICE

11. **Interface Groups, Transmission Specifications and Channel Interfaces** (Cont'd)

11.3 Special Access Channel Interface and Network Channel Codes (Cont'd)

11.3.5 Compatible Channel Interfaces (Cont'd)

(B) Voice Grade (Cont'd)

Compatible CIs		Compatible CIs		Compatible CIs	
4DX2	2DY2	4DX2	8EB2-E	4DX3	6DY2
	2LA2		8EB2-M		6DY3
	2LB2		9DY2		6EA2-E
	2LC2		9DY3		6EA2-M
	2LO3		9EA2		6EB2-E
	2LS2		9EA3		6EB2-M
	2LS3				6LS2
	2RV2-T	4DX3	2DY2		8EB2-E
	4DX2		2LA2		8EB2-M
	4DY2		2LB2		9DY2
	4EA2-E		2LC2		9DY3
	4EA2-M		2LO3		9EA2
	4LS2		2LS2		9EA3
	4RV2-T		2LS3		
	4SF2		2RV2-T	4DY2	2DY2
	4SF3		4DX2		4DY2
	6DY2		4DX3		
	6DY3		4DY2		
	6EA2-E		4EA2-E		
	6EA2-M		4EA2-M		
	6EB2-E		4LS2		
	6EB2-M		4RV2-T		
	6LS2		4SF2		
			4SF3		

Joe Jetensky, Manager
HunTel Communications
1605 Washington Street
Blair, NE 68008

ACCESS SERVICE

11. **Interface Groups, Transmission Specifications and Channel Interfaces** (Cont'd)

11.3 Special Access Channel Interface and Network Channel Codes (Cont'd)

11.3.5 Compatible Channel Interfaces (Cont'd)

(B) Voice Grade (Cont'd)

Compatible CIs		Compatible CIs		Compatible CIs	
4EA2-E	2DY2	4EA3-E	2DY2	4GO2	2G02
	4DY2		4DY2		2GO3
	4EA2-E		4EA2-E		2GS2
	4EA2-M		4EA2-M		2GS3
	4SF2		4SF2		4GS2
	6DY2		6DY2		4SF2
	6DY3		6DY3		6GS2
	6EB2-E		6EA2-E		
	6EB2-M		6EA2-M	4GO3	2GO2
	8EB2-E		6EB2-E		2GS2
	8EB2-M		6EB2-M		2GS3
	9DY2		8EB2-E		4GS2
	9DY3		9EB2-M		4SF2
			9DY2		6GS2
4EA2-M	2DY2		9DY3		
	4DY2		9EA2		
	4EA2-M		9EA3	4GS	2GS
	4SF2				2LS
					4GS
					4LS
	6DY2				
	6DY3				
	6EB2-E				
	6EB2-M				
	8EB2-E				
	8EB2-M				
	9DY2				
	9DY3				

ACCESS SERVICE

11. **Interface Groups, Transmission Specifications and Channel Interfaces** (Cont'd)

11.3 Special Access Channel Interface and Network Channel Codes (Cont'd)

11.3.5 Compatible Channel Interfaces (Cont'd)

(B) Voice Grade (Cont'd)

Compatible CIs		Compatible CIs		Compatible CIs	
4LO2	2LS2	4LS3	2LA2	4SF2	2LO3
	2LS3		2LB2		2LR2
	4LS2		2LC2		2LS2
	4SF2		2LO2		2LS3
	6LS2		2LO3		2RV2-T
			4SF2		4AC2
4LO3	2LS2				4DY2
	2LS3	4NO2	2DA2		4LS2
	4LS2		2DE2		4RV2-T
	4SF2		2NO2		4SF2
	6LS2		4DA2		6DY2
			4DE2		6DY3
4LR2	2LR2		4NO2		6GS2
	4LR2		6DA2		9DY2
	4SF2				9DY3
		4RV2-O	2RV2-T		
4LR3	2LR2		4RV2-T	4SF3	2DY2
	4LR2		4SF2		2GO3
	4SF2				2GS2
		4SF2	2AC2		2GS3
4LS2	2LA2		2DY2		2LA2
	2LB2		2GS2		2LB2
	2LC2		2GS3		2LC2
	2LO2		2LA2		2LO3
	2LO3		2BL2		2LR2
			2LC2		

Joe Jetensky, Manager
HunTel Communications
1605 Washington Street
Blair, NE 68008

ACCESS SERVICE

11. **Interface Groups, Transmission Specifications and Channel Interfaces** (Cont'd)

11.3 Special Access Channel Interface and Network Channel Codes (Cont'd)

11.3.5 Compatible Channel Interfaces (Cont'd)

(B) Voice Grade (Cont'd)

Compatible CIs		Compatible CIs		Compatible CIs	
4SF3	2LS2	6DA	4DA2	6DY3	2DY2
	2LS3		6DA2		4DY2
	2RV2-T				6DY2
	4DY2	6DX2	2DY2		6DY3
	4EA2-E		4DY2		
	4EA2-M		4EA2-E	6EA2-E	2AC2
	4GS2				
	4LR2		4EA2-M		2DY2
	4LS2		4SF2		2LA2
	4RV2-T		6DY2		2LB2
	4SF2		6DY3		2LC2
	4SF3		6EA2-E		2LO3
	6DY2		6EA2-M		2LS2
	6DY3		6EB2-E		2LS3
	6EB2-E		6EB2-M		2RV2-T
	6EB2-M		8EB2-E		4AC2
	6GS2		8EB2-M		4DY2
	6LS2		9DY2		4EA2-E
	9DY2		9DY3		4EA2-M
	9DY3		9EA2		4LS2
	9EA2		9EA3		4RV2-T
	9EA3				4SF2
		6DY2	2DY2		4SF3

Joe Jetensky, Manager
HunTel Communications
1605 Washington Street
Blair, NE 68008

ACCESS SERVICE

11. **Interface Groups, Transmission Specifications and Channel Interfaces** (Cont'd)

11.3 Special Access Channel Interface and Network Channel Codes (Cont'd)

11.3.5 Compatible Channel Interfaces (Cont'd)

(B) Voice Grade (Cont'd)

Compatible CIs		Compatible CIs		Compatible CIs	
4TF2	2TF2		4DY2		6DY2
	4TF2		6DY2		6DY3
					6EA2-E
					6EA2-M
6EA2-E	6EB2-E	6EA2-M	6DY2	6EB3-E	2DY2
	6EB2-M		6DY3		4DY2
	6LS2		6EA2-M		4EA2-E
	8EB2-E		6EB2-E		4EA2-M
	8EB2-M		6EB2-M		4SF2
	9DY2		6LS2		6DY2
	9DY3		8EB2-E		6DY3
			8EB2-M		6EA2-E
6EA2-M	2AC2		9DY2		6EA2-M
	2DY2		9DY3		8EB2-E
	2LA2				8EB2-M
	2LB2	6EB2-E	2DY2		9DY2
	2LC2		4DY2		9DY3
	2LO3		4SF2		9EA2
	2LS2		6DY2		9EA3
	2LS3		6DY3		
	2RV2-T		6EB2-E	6EX2-A	2GS2
	4AC2		6EB2-M		2GS3
	4DY2		9DY2		2LS2
	4EA2-E		9DY3		2LS3
	4EA2-M				4GS2
	4LS2	6EB2-M	2DY2		4LS2
	4RV2-T		4DY2		4SF2
	4SF2		4SF2		6GS2

Joe Jetensky, Manager
HunTel Communications
1605 Washington Street
Blair, NE 68008

ACCESS SERVICE

11. **Interface Groups, Transmission Specifications and Channel Interfaces** (Cont'd)

11.3 Special Access Channel Interface and Network Channel Codes (Cont'd)

11.3.5 Compatible Channel Interfaces (Cont'd)

(B) Voice Grade (Cont'd)

Compatible CIs	Compatible CIs	Compatible CIs
4SF3	6DY2	6LS2
	6DY3	
	6EB2-M	
	9DY2	
	9DY3	

Joe Jetensky, Manager
HunTel Communications
1605 Washington Street
Blair, NE 68008

ACCESS SERVICE

11. **Interface Groups, Transmission Specifications and Channel Interfaces** (Cont'd)

11.3 Special Access Channel Interface and Network Channel Codes (Cont'd)

11.3.5 Compatible Channel Interfaces (Cont'd)

(B) Voice Grade (Cont'd)

Compatible CIs		Compatible CIs		Compatible CIs	
6EX2-B	2GO3	8EB2-E	2AC2	8EB2-M	2AC2
	2LA2		2DY2		2DY2
	2LB2		2LA2		2LA2
	2LC2		2LB2		2LB2
	2LO2		2LC2		2LC2
	2LO3		2LO3		2LO3
	2LR2		2LS2		2LS2
	4LR2		2LS3		2LS3
	4SF2		2RV2-T		2RV2-T
			4AC2		4AC2
6GO2	2GO2		4DY2		4DY2
	2GS2		4LS2		4LS2
	2GS3		4RV2-T		4RV2-T
	4GS2		4SF2		4SF2
	4SF2		4SF3		4SF3
	6GS2		6DY2		6DY2
			6DY3		6DY3
6LO2	2LS2		6EB2-E		6EB2-E
	2LS3		6EB2-M		6EB2-M
	4LS2		6LS2		6LS2
	4SF2		8EB2-E		8EB2-M
	6LS2		8EB2-M		9DY2
			9DY2		9DY3
6LS2	2LA2		9DY3		
	2LB2				
	2LC2				
	2LO2				
	2LO3				
	4SF2				

Joe Jetensky, Manager
HunTel Communications
1605 Washington Street
Blair, NE 68008

ACCESS SERVICE

11. **Interface Groups, Transmission Specifications and Channel Interfaces** (Cont'd)

11.3 Special Access Channel Interface and Network Channel Codes (Cont'd)

11.3.5 Compatible Channel Interfaces (Cont'd)

(B) Voice Grade (Cont'd)

Compatible CIs		Compatible CIs		Compatible CIs	
8EC2	2DY2	9DY2	2DY2	9EA3	2DY2
	4DY2		4DY2		4DY2
	4EA2-E		6DY2		4EA2-E
	4EA2-M		6DY3		4EA2-M
	4SF2		9DY2		6DY2
	6DY2				6DY3
	6DY3	9DY3	2DY2		6EA2-E
	6EA2-E		4DY2		6EA2-M
	6EA2-M		6DY2		6EB2-E
	6EB2-E		6DY3		6EB2-M
	6EB2-M		9DY2		8EB2-E
	8EB2-E		9DY3		8EB2-M
	8EB2-M				9DY2
	9DY2	9EA2	2DY2		9DY3
	9DY3		4DY2		9EA3
	9EA2		4EA2-E		
	9EA3		4EA2-M		
			6DY2		
			6DY3		
			6EA2-E		
			6EA2-M		
			6EB2-E		
			6EB2-M		
			8EB2-E		
			8EB2-M		
			9DY2		
			9DY3		
			9EA2		
			9EA3		

ACCESS SERVICE

11. **Interface Groups, Transmission Specifications and Channel Interfaces** (Cont'd)

11.3 Special Access Channel Interface and Network Channel Codes (Cont'd)

11.3.5 Compatible Channel Interfaces (Cont'd)

(C) Program Audio

Compatible CIs		Compatible CIs	
2PG2-1	2PG1-1 2PG2-1	4DS8-15E	2PG1-3 2PG2-3
2PG1-5	2PG2-3 2PG2-3	2PG1-3	4DS8-15F 2PG2-5
2PG2-5	2PG1-5 2PG2-5	4DS8-15G	2PG1-8 2PG2-8
2PG2-8	2PG1-8 2PG2-8	4DA8-15H	2PG1-1 2PG2-1

Joe Jetensky, Manager
HunTel Communications
1605 Washington Street
Blair, NE 68008

ACCESS SERVICE

11. **Interface Groups, Transmission Specifications and Channel Interfaces** (Cont'd)

11.3 Special Access Channel Interface and Network Channel Codes (Cont'd)

11.3.5 Compatible Channel Interfaces (Cont'd)

(D) Digital Data

Compatible CIs	Compatible CIs		Compatible CIs
4DS8-15	4DS8-15+	4DU5-24	4DU5-24	6DU5-24
	6DU5-24			
	4DU5-24			
	4DU5-48	4DU5-48	4DU5-48	6DU5-48
	6DU5-48			
	4DU5-96	4DU5-96	4DU5-96	
	6DU24			
	6DU5-48	4DU5-56	4DU5-56	6DU5-96
	6DU5-96			
	6DU5-96			
	4DU5-56	4DU8-56		6DU5-56
	6DU5-56	6DU5-56		6DU5-56

(E) High Capacity

Compatible CIs		Compatible CIs	
4DSO-63	4DSO-63	4DS8-15J	4DU8-A
	4DU8-A,B or C		6DU8-A
	6DU8-A,B or C		
		4DS8-15K	4DU8-B
4DS6-27	4DS6-27		4DU8-C
	4DU8-A,B or C		6DU8-B
	6DU8-A,B or C		6DU8-C
4DS6-44	4DS6-44	4DS8-31	4DS8-31
	4DU8-A,B or C		4DU8-A,B or C
	6DU8-A,B or C		6DU8-A,B or C
4DS8-15	4DS8-15+	4DU8-A,B	
	4DU8-8	or C	4DU8-A,B or C
	6DU8-8		

\+ Available only as a cross connect of two individual channels of 1.544 MBPS facilities at a Telephone Company hub.

Joe Jetensky, Manager
HunTel Communications
1605 Washington Street
Blair, NE 68008

ACCESS SERVICE

11. **Interface Groups, Transmission Specifications and Channel Interfaces** (Cont'd)

11.4 WATS Access Line Standard Transmission Specifications

11.4.1 Standard Two-Wire Voice Transmission Specifications

(A) Loss Deviation

The maximum Loss Deviation of the 1,004 Hz loss relative to the Expected Measured Loss (EML) is plus or minus 4.0 dB.

(B) Attenuation Distortion

The maximum Attenuation Distortion in the 404 to 2,804 Hz frequency band relative to the loss at 1,004 Hz in -3.0 dB to +9.0 dB.

(C) C-Message Noise

The maximum C-Message Noise for the transmission path at the route miles listed is less than:

Route Miles	C-Message Noise
less than 50	35 dBrnCO
51 to 100	37 dBrnCO
101 to 200	40 dBrnCO
201 to 400	43 dBrnCO
401 to 1,000	45 dBrnCO

(D) Echo Control

Return Loss for both Echo Return Loss (ERL) and Singing Return Loss (SRL), is equal to or greater than:

ERL	6.0 dB
SRL	3.0 dB

Joe Jetensky, Manager
HunTel Communications
1605 Washington Street
Blair, NE 68008

ACCESS SERVICE

11. **Interface Groups, Transmission Specifications and Channel Interfaces** (Cont'd)

11.4 WATS Access Line Standard Transmission Specifications (Cont'd)

11.4.2 Standard Four-Wire Voice Transmission Specifications

(A) Loss Deviation

The maximum Loss Deviation of the 1,004 Hz loss relative to the Expected Measured Loss (EML) is
-3.0 dB to +3.0 dB.

(B) Attenuation Distortion

The maximum Attenuation Distortion in the 404 to 2,804 Hz frequency band relative to loss at 1,004 Hz is -1.0 dB to +4.5 dB.

(C) C-Message Noise

The Maximum C-Message Noise for the transmission path at the route miles listed is less than:

Route Miles	C-Message Noise
less than 50	35 dBrnCO
51 to 100	37 dBrnCO
101 to 200	40 dBrnCO
201 to 400	43 dBrnCO
401 to 1,000	45 dBrnCO

(D) Echo Control

The Equal Level Echo Path Loss for both Echo Return Loss (ERL) and Singing Return Loss (SRL), is equal to or greater than:

ERL	15.0 dB
SRL	9.0 dB

Joe Jetensky, Manager
HunTel Communications
1605 Washington Street
Blair, NE 68008

ACCESS SERVICE

11. **Interface Groups, Transmission Specifications and Channel Interfaces** (Cont'd)

11.5 WATS Access Line Data Transmission Parameters

11.5.1 Signal to C-Notched Noise Ratio

The maximum Signal-to-C-Notched Noise Ratio is 30 dB.

11.5.2 Envelope Delay Distortion

The maximum Envelope Delay Distortion for the frequency bands specified is:

1000 microseconds	604 to 2,804 Hz
500 microseconds	1,000 to 2,404 Hz

11.5.3 Impulse Noise Count

The Impulse Noise Count exceeding a 67 dBrnCO threshold in 15 minutes is no more than 15 counts.

11.5.4 Intermodulation Distortion

The Second Order (R2) and Third Order (R3) Intermodulation Distortion products are equal to or greater than:

Second Order (R2)	31 dB
Third Order (R3)	34 dB

11.5.5 Phase Jitter

The Phase Jitter over the 4 to 300 Hz frequency band is less than or equal to 7 degrees peak-to-peak.

11.5.6 Frequency Shift

The maximum Frequency Shift does not exceed -2 to +2 Hz.

Joe Jetensky, Manager
HunTel Communications
1605 Washington Street
Blair, NE 68008

ACCESS SERVICE

11. **Interface Groups, Transmission Specifications and Channel Interfaces** (Cont'd)

11.6 WATS Access Line Transmission Specifications

11.6.1 Improved Two-Wire Voice Transmission Specifications

(A) Loss Deviation

The maximum Loss Deviation of the 1,004 Hz loss relative to the Expected Measured Loss (EML) is
-4.0 to +4.0 dB.

(B) Attenuation Distortion

The maximum Attenuation Distortion in the 404 to 280 Hz frequency band relative to loss at 1,004 Hz is -2.0 dB to +6.0 dB.

(C) C-Message Noise

The maximum C-Message Noise for the transmission path at the route miles listed is less than:

Route Miles	C-Message Noise
less than 50	35 dBrnCO
51 to 100	37 dBrnCO
101 to 200	40 dBrnCO
201 to 400	43 dBrnCO
401 to 1,000	45 dBrnCO

(D) Return Loss

The Return Loss, expressed as Echo Return Loss (ERL) and Singing Return Loss (SRL), is equal to or greater than:

ERL	13.0 dB
SRL	6.0 dB

Joe Jetensky, Manager
HunTel Communications
1605 Washington Street
Blair, NE 68008

ACCESS SERVICE

12. **Rates and Charges**

12.1 Common Line Access Services

12.1.1 General

The rates and charges for the service offered in this tariff are shown separately for each element.

12.1.2 End User Access Service

		Monthly Rates	
(A)	End User Common Line (EUCL) Residence - individual line or trunk	Mirrors EUCL rate in Qwest Corporation Tariff F.C.C. No. 1, Section 4.7.1	(R)
(B)	End User Common Line (EUCL) Single Line Business - individual line or trunk	Mirrors EUCL rate in Qwest Corporation Tariff F.C.C. No. 1, Section 4.7.1	
(C)	End User Common Line (EUCL) Non-Primary Residential - Individual line or trunk	Mirrors EUCL rate in Qwest Corporation Tariff F.C.C. No. 1, Section 4.7.1	
(D)	End User Common Line (EUCL) Multiline Business including Centrex CO and CO-like ordered on or after July 28, 1983 - Individual line or trunk	Mirrors EUCL rate in Qwest Corporation Tariff F.C.C. No. 1, Section 4.7.1	(R)

ACCESS SERVICE

12. Rates and Charges (Cont'd)

12.2 Switched Access Service

The rates and charges for the switched access service offered in this tariff are the same as those set forth in the NATIONAL EXCHANGE CARRIER ASSOCIATION, INC. TARIFF F.C.C. No. 5 for the rate elements listed below, except in those instances where a rate is indicated for the rate element. (T)

(A) Nonrecurring Charges

(1) Local Transport-Installation
Per Entrance Facility
(a) Voice Grade Two Wire
(b) Voice Grade Four Wire
(c) High Capacity DS1
(d) High Capacity DS3

(B) Interim NXX Translation

(C) FGD Conversion of Multifrequency Address Signaling to SS7 Signaling or SS7 Signaling to Multifrequency Address Signaling

ACCESS SERVICE

12. **Rates and Charges** (Cont'd)

12.2 Switched Access Service (Cont'd)

(D) Trunk Activation

(E) Flexible ANI

(F) Local Transport
Premium Access

(1) Entrance Facility
Per Termination
-Voice Grade Two-Wire
-Voice Grade Four-Wire
-High Capactiy DS1
-High Capacity DS3

(2) Direct Trunked Transport
(a) Direct Trunked Facility
Per Mile
-Voice Grade 6.2
-High Capacity DS1
-High Capacity DS3

(b) Direct Trunked Termination
Per Termination
-Voice Grade
-High Capacity DS1
-High Capacity DS3

(3) Multiplexing

Joe Jetensky, Manager
HunTel Communications
1605 Washington Street
Blair, NE 68008

ACCESS SERVICE

12. **Rates and Charges** (Cont'd)

12.2 Switched Access Service (Cont'd)

(F) Local Transport (Cont'd)
Premium Access (Cont'd)

		Monthly Rate	NRC*	
(4)	Customer Node			
(5)	Customer Premises Port			
(6)	Add/Drop Multiplexing Central Office Port			
(7)	Tandem Switched Transport			
	(a) Tandem Switched Facility Per access minute per mile	$0.00003		(R)
	(b) Tandem Switched Termination Per access minute per termination			
	(c) Tandem Switching Per access minute per tandem			
(8)	Network Blocking Per Blocked Call			

(G) End Office

(1) Local Switching
Premium
- Rate Band 8

(2) Information Surcharge

*NonrecurringCharge

Joe Jetensky, Manager
HunTel Communications
1605 Washington Street
Blair, NE 68008

ACCESS SERVICE

12. **Rates and Charges** (Cont'd)

12.2 Switched Access Service (Cont'd)

(H) Toll Free Number Data
Base Access Service

(1) Base Rate
per query

(2) Vertical Features Rate
per query (replaces basic rate)

Joe Jetensky, Manager
HunTel Communications
1605 Washington Street
Blair, NE 68008

ACCESS SERVICE

12.3 Special Access Service

	Monthly Rates	Non Recurring Charges	Tariff Section Reference
(A) Voice Grade Channel,			
(1) Channel Termination per termination*			
Two-Wire	$41.71	$230.00	7.1.1(A)
Four-Wire	$66.74	$230.00	7.1.1(A)
(2) Channel Mileage Facility			
per mile	$2.97	None	7.1.1(B)(1)
(3) Channel Mileage Termination per termination	$29.86	None	7.1.1(B)(2)
(4) Optional Features and Functions			
(a) Conditioning per termination			7.2.1(C)(1)
- C-Type	$ 7.20	None	
- Data Capability	$ 4.95	None	
- Voice Bridging	$ 6.50	None	
- Data Bridging	$ 6.50	None	

* The Channel Termination rate includes non-chargeable Channel Interfaces as set forth in Section 7.1.4, preceding.

Joe Jetensky, Manager
HunTel Communications
1605 Washington Street
Blair, NE 68008

ACCESS SERVICE

12. **Rates and Charges** (Cont'd)

12.3 Special Access Service (Cont'd)

	Monthly Rates	Non Recurring Charges	Tariff Section Reference
(B) Digital Data			
(1) Channel Termination			
per termination*			
2.4-19.2 Kbps	$76.98	$240.00	
56-64 Kbps	$76.98	$240.00	7.1.1(A)
(2) Channel Mileage Facility			
per mile			
2.4-19.2 Kbps	$2.82	None	
56-64 Kbps	$4.00	None	7.1.1(B)(1)
(3) Channel Mileage Termination			
per termination			
2.4-19.2 Kbps	$28.36	None	
56-64 Kbps	$40.20	None	7.1.1(B)(2)
(4) Optional Features and Functions			
Bridging	$ 7.85		7.1.1(C)
Transfer Arr'ment	$ 6.21		7.1.1(C)
(C) High Capacity			
(1) Channel Termination			
per termination*			
128 Kbps	N/A		
256 Kbps	N/A		
384 Kbps	N/A		
512 Kbps	N/A		
1.544 Mbps	$178.63	$251.00	7.1.1(A)
44.736 Mbps	$2072.10	$251.00	7.1.1(A)

* The Channel Termination rate includes non-chargeable Channel Interfaces as set forth in Section 7.1.4, preceding.

Joe Jetensky, Manager
HunTel Communications
1605 Washington Street
Blair, NE 68008

ACCESS SERVICE

12. **Rates and Charges** (Cont'd)

12.3 Special Access Service (Cont'd)

	Monthly DS1	Monthly DS3	Tariff Section Reference
(C) High Capacity Cont'd)			
(2) Channel Mileage Facility			7.1.1 (B)(1)
per mile			
0 miles	No Charge	No Charge	
Over 0-8 miles	$19.34	$133.12	
Over 8-25 miles	$19.34	$133.12	
Over 25-50 miles	$19.34	$133.12	
Over 50 miles	$19.34	$133.12	
(3) Channel Mileage Termination			7.1.1 (B)(2)
per termination			
0 miles	No Charge	No Charge	
Over 0-8 miles	$ 95.34	$531.00	
Over 8-25 miles	$ 95.34	$531.00	
Over 25-50 miles	$ 95.34	$531.00	
Over 50 miles	$ 95.34	$531.00	
(4) Optional Features and Functions			
	Monthly	Nonrecurring	
Auto Loop Transfer	$158.00		
Transfer Arr'ment.	$172.20		
Multiplexing			
DS1 to Voice or DS0	$183.12		
DS3 to DS1	$474.31		
(D) Special Access Surcharge			
Per Voice Grade Equivalent	$25.00	None	7.4.4
(E) Term Discounts for DS1 and DS3 Services			7.4.6
36 months	10%		
60 months	20%		

Joe Jetensky, Manager
HunTel Communications
1605 Washington Street
Blair, NE 68008

ACCESS SERVICE

12. **Rates and Charges** (Cont'd)

12.4 Advanced Communications Services

12.4.1 Frame Relay Service

	Monthly Rates	Non Recurring Charges	Tariff Section Reference
(A) Access Link			
-per 56 or 64 Kbps link	$135.00	$240.00	8.1.5(A)
-per 1.544 Mbps link	$340.00	$251.00	
(B) Permanent Virtual Connection (PVC)			
(1) Standard per port			8.1.5(B)
CIR			
56-64 Kbps	$ 7.00	$50.00	
128 Kbps	$ 9.00	$50.00	
192 Kbps	$12.00	$50.00	
256 Kbps	$14.00	$50.00	
384 Kbps	$20.00	$50.00	
512 Kbps	$28.00	$50.00	
768 Kbps	$36.00	$50.00	
(2) Extended per port			8.1.5((B)
CIR			
56-64 Kbps	$ 8.00	$50.00	
128 Kbps	$15.00	$50.00	
192 Kbps	$25.00	$50.00	
256 Kbps	$30.00	$50.00	
384 Kbps	$45.00	$50.00	
512 Kbps	$60.00	$50.00	
768 Kbps	$90.00	$50.00	
(C) PVC Rearrangement			
Per rearranged port		$25.00	8.1.5(C)(2)

Joe Jetensky, Manager
HunTel Communications
1605 Washington Street
Blair, NE 68008

ACCESS SERVICE

12. **Rates and Charges** (Cont'd)

12.5 Miscellaneous Services

		Basic time, Scheduled working hours	Overtime, outside scheduled working hours	Tariff Section Reference
(A)	Additional Engineering Periods Per engineer, 1/2 hour or fraction thereof,	$25.35	$38.02	9.1
(B)	Additional Labor Per technician, 1/2 hour or fraction thereof,	$25.35	$33.03	9.2
(C)	Maintenance of Service Per technician, 1/2 hour or fraction thereof,	$22.02	$33.03	9.3.1
(D)	Programming Services Per programmer, 1/2 hour or fraction thereof,	$25.35	$33.03	9.3.2

Joe Jetensky, Manager
HunTel Communications
1605 Washington Street
Blair, NE 68008

ACCESS SERVICE

12. Rates and Charges (Cont'd)

12.5 Miscellaneous Services (Cont'd)

		Per Line Per Request	Tariff Section Reference
(E)	Presubscription	$ 5.00	9.3.3
(F)	Blocking Services		9.3.5
	1. International Blocking Service	$ 11.20	
	2. 900 Blocking Service		
	a. Blocking	$ 11.20	
	b. Unblocking	$ 11.20	
(G)	Billing Name and Address Information		9.3.6
	Per Request Incidence	$ 0.33	
	Per BNA Order	$50.94	
(H)	CO Implemented Coin Line Features and Functions	Monthly Rate $2.21	
		Nonrecurring Rate	
(I)	Service Order Charge		
	- Per order	$136.00	
(J)	Originating Line Screening (OLS)/ Flex ANI Service		
	- Per exchange access line	$7.95*	6.3.6

* NRC is waived when ordered with the installation of new local exchange access line.

Joe Jetensky, Manager
HunTel Communications
1605 Washington Street
Blair, NE 68008

NON-ACCESS SERVICE

13. Reciprocal Compensation Pursuant to Section 251(b) of the Telecommunications Act of 1996

This section provides for the rates, terms and conditions for the transport and termination of non-access service traffic originated by the end-users of local exchange carriers (LECs), including incumbent local exchange carriers and competitive local exchange carriers, when the LEC and the Telephone Company have not negotiated and obtained state approval of an interconnection agreement pursuant to Section 251(b) of the Communication Act thereby establishing, *inter alia*, a reciprocal compensation arrangement for the transport and termination of traffic to the Telephone Company's end users. The rates, terms, and conditions of this section will also apply to reciprocal compensation to be paid to the Telephone Company by Commercial Mobile Radio Service (CMRS) carriers for intraMTA traffic unless a separate agreement is reached by the CMRS provider and the Telephone Company. Non-access service traffic includes, but is not limited to, traffic originated by an incumbent local exchange carrier or a competitive local exchange carrier (other than the Telephone Company) or CMRS carrier intraMTA traffic that is transported and terminated by the Telephone Company to its end users. Non-access service traffic transported and terminated by the Telephone Company to an Internet Service Provider (ISP) will be treated as all other non-access service traffic in this section until such time that the FCC Order on Remand and Report and Order, FCC 01-131 (April 2001), is effective. Thereafter, non-access service traffic transported and terminated by the Telephone Company to an ISP will be subject to the cost recovery mechanisms established by the FCC in its Order on Remand and Report and Order, FCC 01-131 (April 2001).

Until an interconnection agreement is reached and approved by the applicable state regulator, the rates, terms and conditions set forth in this tariff applicable to Switched Access Service shall apply to the transport and termination of non-access service traffic.

Joe Jetensky, Manager
HunTel Communications
1605 Washington Street
Blair, NE 68008