Cancels TELEPHONE UTILITIES EXCHANGE
CARRIER ASSOCIATION
Tariff F.C.C. No. 2
Original Title Page 1 (x)

ACCESS SERVICE

Regulations, Rates and Charges
applying to the provision of Access Services
within a Local Access and Transport Area (LATA) or
equivalent Market Area for connection to interstate
communications facilities for Interstate Customers within
the CenturyLink Operating territories of the Issuing Carriers listed
on Title Page 2. Access Services are provided by
means of wire, fiber optics, radio or any other suitable
technology or a combination thereof.

(x) CenturyLink Operating Companies Tariff F.C.C. No. 8 is being issued on not less than one day's notice under authority of Special Permission No. 11-002 of the Federal Communications Commission and contains rates and regulations previously found in TELEPHONE UTILITIES EXCHANGE CARRIER ASSOCIATION, Tariff F.C.C No. 2.

ACCESS SERVICE

ISSUING CARRIERS

CenturyTel of Cowiche, Inc.

CenturyTel of Eagle, Inc.

CenturyTel of Eastern Oregon, Inc.

CenturyTel of the Gem State, Inc.

CenturyTel of Inter-Island, Inc.

CenturyTel of Minnesota, Inc.

CenturyTel of the Midwest-Kendall, LLC

CenturyTel of the Midwest-Wisconsin, LLC

CenturyTel of Montanan, Inc.

CenturyTel of Oregon, Inc.

CenturyTel of Washington, Inc.

CenturyTel of Wyoming, Inc.

CenturyTel of Monroe County, LLC

CenturyTel of San Marcos, Inc.

ACCESS SERVICE

CHECK SHEET

Title Pages 1 and 2 and Pages 1 to 17-52, inclusive, of this tariff are effective as of the date shown.

Page	Number of Revision Except as Indicated	Page	Number of Revision Except as Indicated	Page	Number of Revision Except as Indicated

* New or revised page.

ACCESS SERVICE

TABLE OF CONTENTS

ACCESS SERVICE

TABLE OF CONTENTS (Cont'd)

TABLE OF CONTENTS (Cont'd)

TABLE OF CONTENTS (Cont'd)

Page No.

2. GENERAL REGULATIONS (Cont'd)

2.6 Definitions (Cont'd)

TABLE OF CONTENTS (Cont'd)

Page No.

2. GENERAL REGULATIONS (Cont'd)

2.6 Definitions (Cont'd)

ACCESS SERVICE

TABLE OF CONTENTS (Cont'd)

Page No.

2. GENERAL REGULATIONS (Cont'd)

2.6 Definitions (Cont'd)

TABLE OF CONTENTS (Cont'd)

Page No.

2. GENERAL REGULATIONS (Cont'd)

2.6 Definitions (Cont'd)

ACCESS SERVICE

TABLE OF CONTENTS (Cont'd)

ACCESS SERVICE

TABLE OF CONTENTS (Cont'd)

ACCESS SERVICE

TABLE OF CONTENTS (Cont'd)

ACCESS SERVICE

TABLE OF CONTENTS (Cont'd)

ACCESS SERVICE

TABLE OF CONTENTS (Cont'd)

ACCESS SERVICE

TABLE OF CONTENTS (Cont'd)

ACCESS SERVICE

TABLE OF CONTENTS (Cont'd)

TABLE OF CONTENTS (Cont'd)

ACCESS SERVICE

TABLE OF CONTENTS (Cont'd)

TABLE OF CONTENTS (Cont'd)

ACCESS SERVICE

TABLE OF CONTENTS (Cont'd)

ACCESS SERVICE

TABLE OF CONTENTS (Cont'd)

ACCESS SERVICE

TABLE OF CONTENTS (Cont'd)

ACCESS SERVICE

TABLE OF CONTENTS (Cont'd)

TABLE OF CONTENTS (Cont'd)

ACCESS SERVICE

CONCURRING CARRIERS

NO CONCURRING CARRIERS

CONNECTING CARRIERS

NO CONNECTING CARRIERS

OTHER PARTICIPATING CARRIERS

NO OTHER PARTICIPATING CARRIERS

REGISTERED SERVICEMARKS

NONE

REGISTERED TRADEMARKS

NONE

ACCESS SERVICE

EXPLANATION OF SYMBOLS

(C)	-	To signify changed regulation
(D)	-	To signify discontinued rate or regulation
(I)	-	To signify increase
(N)	-	To signify new rate or regulation
(R)	-	To signify reduction
(S)	-	To signify reissued matter
(T)	-	To signify a change in text but no change in rate or regulation
(M)	-	To signify material relocated without change
(Z)	-	To signify a correction

EXPLANATION OF ABBREVIATIONS

ac	-	Alternating current
ADSL	-	Asymmetric Digital Subscriber Line
AML	-	Actual Measured Loss
ANI	-	Automatic Number Identification
AP	-	Program Audio
AT&T	-	American Telephone and Telegraph Company
ATM	-	Asynchronous Transfer Mode
ATM-CRS	-	Asynchronous Transfer Mode Cell Relay Access Service
BD	-	Business Day
CBR	-	Constant Bit Rate
CNCC	-	Customer Network Control Center
COCTX	-	Central Office Centrex
Cont'd	-	Continued
CPE	-	Customer Provided Equipment
CSACC	-	Customer Service Administration Control Center
Ctx	-	Centrex
DA	-	Directory Assistance
db	-	decibel
dBrnC	-	Decibel Reference Noise C-Message Weighted
dBrnCO	-	Decibel Reference Noise C-Message Referenced to 0
dBV	-	decibel(s) relative to 1 volt (reference)
dc	-	direct current
DSL	-	Digital Subscriber Line
EDD	-	Envelope Delay Distortion
ELEPL	-	Equal Level Echo Path Loss
EML	-	Expected Measured Loss
EPL	-	Echo Path Loss
ERL	-	Echo Return Loss
ESS	-	Electronic Switching System
ESSX	-	Electronic Switching System Exchange

ACCESS SERVICE

EXPLANATION OF ABBREVIATIONS (Cont'd)

ADM	-	Add/Drop Multiplexing
f	-	frequency
FI	-	Facility Interface
FID	-	Field Identifier
F.C.C.	-	Federal Communications Commission
FX	-	Foreign Exchange
HC	-	High Capacity
Hz	-	Hertz
IC	-	Interexchange Customer
ICB	-	Individual Case Basis
ICL	-	Inserted Connection Loss
ILP	-	Initial Liability Period
IXC	-	Interexchange Channel
kbps	-	kilobits per second
kHz	-	kilohertz
LATA	-	Local Access and Transport Area
LDMTS	-	Long Distance Message Telecommunications Service(s)
Ma	-	milliamperes
Mbps	-	Megabits per second
MHz	-	Megahertz
MM-VCC	-	MultiMedia Virtual Circuit Channel
MMUC	-	Minimum Monthly Usage Charge
MRC	-	Monthly Recurring Charge
NB	-	Narrowband
NNI	-	Network to Network Interface
NPA	-	Numbering Plan Area
NRC	-	Nonrecurring Charge
NTS	-	Non-Traffic Sensitive
NXX	-	Three Digit Central Office Code
OLT	-	Optical Line Termination
OMF	-	Optional Miscellaneous Functions
OTPL	-	Zero Transmission Level Point
PBX	-	Private Branch Exchange
PCM	-	Pulse Code Modulation
PI	-	Priority Installation
PLR	-	Private Line Ringdown
POI	-	Point of Interface
PR	-	Priority Restoration
rms	-	root-mean-square
RMS	-	Remote Switching Modules
RSS	-	Remote Switching Systems
SSRIT	-	Shared SONET Ring Interoffice Transport
UBR	-	Unspecified Bit Rate
UNI	-	User Network Interface
VBR-nrt	-	Variable Bit Rate- non-real time
VBR-rt	-	Variable Bit Rate- real time
VCC	-	Virtual Circuit Channel
VP	-	Virtual Path

ACCESS SERVICE

REFERENCE TO OTHER TARIFFS

Whenever reference is made in this tariff to other tariffs of the Telephone Company, the reference is to the tariffs in force as of the effective date of this tariff, and to amendments thereto and successive issues thereof.

The following tariffs are referenced in this tariff and may be obtained from the Federal Communications Commission's commercial contractor:

National Exchange Carrier Association, Inc. Special Construction Tariff F.C.C. No. 3	National Exchange Carrier Association, Inc. Wire Center Information Tariff F.C.C. No. 4

REFERENCE TO TECHNICAL PUBLICATIONS

The following technical publications are referenced in this tariff and may be obtained from Bell Communications Research, Inc., Customer Services, 60 New England Ave., Piscataway, NJ 08854-4196.

Technical Reference:

GR-253-CORE Issue 2 Synchronous Optical Network (SONET) Transport Systems: Common Generic Criteria
Issued: December 1995

GR-1374-CORE Issue 1 SONET Inter-Carrier Interface Physical Layer Generic Criteria for Carriers
Issued: December 1994

Multiple Exchange Carrier Access Billing (MECAB) Guidelines
Issued: June 1994

Multiple Exchange Carrier Ordering and Design (MECOD) Guidelines
Issued: May 1994

PUB 41004 Data Communications Using Voiceband Private Line Channels
Issued: October 1973

PUB 62310 (MDP-326-726) Digital Data System Channel Interface Specification
Issued: September 1983

PUB 62411 High Capacity Digital Service Channel Interface Specification
Issued: September 1983, Addendum October 1984

TR-NPL-000258 Compatibility Information for Feature Group D Switched Access Service
Issued: October 1985

ACCESS SERVICE

REFERENCE TO TECHNICAL PUBLICATIONS (Cont'd)

TR-NWT-000334 Issue 2 Voice Grade Switched Access Service - Transmission Parameter Limits and Interface Combinations
Issued: September 1990

TR-TSY-000335, Issue 2 Voice Grade Special Access Service - Transmission Parameter Limits and Interface Combinations
Issued: May 1990

TR-NPL-000336 Metallic and Telegraph Grade Special Access Service - Transmission Parameter Limits and Interface Combinations
Issued: October 1997

TR-NPL-000337 Program Audio Special Access Service and Local Channel Services
Issued: July 1987

TR-NPL-000338 Television Special Access and Local Channel Services - Transmission Parameter Limits and Interface Combinations
Issued: December 1986

TR-NWT-000341 Digital Data Special Access Service - Transmission Parameter Limits and Interface Combinations
Issued: Issue 2, February 1993

TR-INS-000342 High Capacity Digital Special Access Service
Issued: February 1991

SR-STS-000307 Issue 5 NC/NCI Code Dictionary
Issued: May 1994

TR-TSY-000506 LATA Switching Systems Generic Requirements (LSSGR) Section 6
Issued: October 1987, Revised December 1988, Revised June 1990

TR-NPL-000054 High Capacity Digital Service (1.544 Mbs) Interface Generic Requirements for End Users
Issued: April 1989 Available: April 1989

TR-TSV-000905 Common Channel Signaling Network Interface Specification Supplement 1
Available: August 1989

TR-TSV-001370 Generic Requirements for Exchange Access Frame Relay PVC Service
Issued: Issue 1, May 1993

ACCESS SERVICE

REFERENCE TO TECHNICAL PUBLICATIONS (Cont'd)

The following technical publication is referenced in this tariff and may be obtained from the Bell Communications Technical Education Center, Room B02, 6200 Route 53, Lisle, IL 60532.

Telecommunications Transmission Engineering Volume 3 - Networks and Services
(Chapters 6 and 7)
Second Edition, 1980
Issued: June 1980

The following technical publication is referenced in this tariff and may be obtained from the National Exchange Carrier Association, Inc., Director - Access Tariffs, 100 So. Jefferson Road, Whippany, NJ 07981 and the Federal Communications Commission's commercial contractor.

PUB AS No. 1, Issue II Access Service
Issued: May 1984
Addendum: March 1987

The following publications are referenced in this tariff and may be obtained from the Government Printing Office, Superintendent of Documents, Document Control Branch, 941 N. Capital St., N.E., Washington, D.C. 20401.

Telecommunications Service Priority (TSP) System for National Security Emergency Preparedness (NSEP) Service Vendor Handbook, National Communications System (NCSH 3-1-2).

Issued: July 1990 Available: August 1990

Telecommunication Service Priority (TSP) System for National Security Emergency Preparedness (NSEP) Service User Manual, National Communications System (NCSM 3-1-1).

Issued: July 1990 Available: August 1990

The following publication is referenced in this tariff and may be obtained from Director-Sales Operations, Integrated Network Corporation, P.O. Box 6875, Bridgewater, N.J. 08807.

Integrated Network Corporation
Document CB-INC-100
Available: June 1990

The following publication is referenced in this tariff and may be obtained from AT&T, 26 Parsippany Road, Whippany, N.J. 07981.

AT&T PUB 62310
(and its Addendum 2 and Addendum 3)
Available: October 1989

ACCESS SERVICE

REFERENCE TO TECHNICAL PUBLICATIONS (Cont'd)

The following technical publications are referenced in this tariff and may be obtained from American National Standards Institute, 1430 Broadway, New York, New York 10018.

ANSI T1.102-1993, Digital Hierarchy - Electrical Interfaces.

ANSI T1.105-1995, Synchronous Optical Network (SONET) - Basic Description including Multiplex Structure, Rates and Formats.

ANSI T1.602-1989, Integrated Services Digital Network (ISDN) - Data-Link Layer Signaling Specification for Application at the User-Network Interface.

ANSI T1.606-1990, Integrated Services Digital Network (ISDN) - Architectural Framework and Service Description for Frame-Relaying Bearer Service.

ANSI T1.606a-1992, Supplement to ANSI T1.606-1990 Integrated Services Digital Network (ISDN) - Architectural Framework and Service Description for Frame-Relaying Bearer Service (Congestion Management and Frame Size).

ANSI T1.606b-1993, Supplement to ANSI T1.606-1990 Integrated Services Digital Network (ISDN) - Architectural Framework and Service Description for Frame-Relaying Bearer Service (Network-to-Network Interface Requirements).

ANSI T1.617-1991, Integrated Services Digital Network (ISDN) - Signaling Specification for Frame Relay Bearer Service for Digital Subscriber Signaling System Number 1 (DSS1).

ANSI T1.617a-1994, Integrated Services Digital Network (ISDN) - Signaling Specification for Frame Relay Bearer Service for Digital Subscriber Signaling System Number 1 (DSS1) Protocol Encapsulation and PICS.

ANSI T1.618-1991, Integrated Services Digital Network (ISDN) - Core Aspects of Frame Protocol for Use with Frame Relay Bearer Service.

ANSI T1.413-1998, Network and Customer Installation Interfaces - Asymmetric Digital Subscriber Line (ADSL) Metallic Interface.

The following technical publication is referenced in this tariff and may be obtained from the Institute of Electrical and Electronics Engineers, Inc. (IEEE), 445 Hoes Lane, P.O. Box 1331, Piscataway, NJ 08855-1331 (www.ieee.org).

IEEE Std. 802.3-2000, Part 3, Clauses 14, 21, 29 and 34 through 38- Information Technology- Telecommunications and Information Exchange Between Systems- Local and Metropolitan Area Networks-Specific Requirements

ACCESS SERVICE

REFERENCE TO TECHNICAL PUBLICATIONS (Cont'd)

The following technical publications are referenced in this tariff and may be obtained from the ATM Forum, Presidio of San Francisco, P.O. Box 29920, 572B Ruger Street, San Francisco, CA 94129-0920 (www.atmforum.com).

The ATM Forum Technical Committee, ATM User-Network Interface (UNI) Signaling Specification, Version 4.0, af-sig-0061.000, July, 1996.

The ATM Forum Technical Committee, BISDN Inter Carrier Interface (B-ICI) Specification, Version 2.0 (Integrated), af-bici-0013.003, December, 1995.

The ATM Forum Technical Committee, Private Network- Network Interface Specification, Version 1.0 (PNNI 1.0) af-pnni-0055.000, March, 1996.

The following publications are referenced in this tariff and may be obtained from the American National Standards Institute (ANSI), 11 West 42nd Street, New York, New York 10036.

ANSI / IEEE X3.802.3	Issue Date March 2002
ANSI / IEEE X3.802.3u	Issue Date June 1995
ANSI / IEEE X3.802.3z	Issue Date June 1998

ACCESS SERVICE

1. Application of Tariff

1.1 This tariff contains regulations, rates and charges applicable to the provision of Switched Access, Special Access, Digital Subscriber Line Access Service, Public Packet Data Network, and other miscellaneous services, hereinafter referred to collectively as service(s). These services are provided to customers by the Issuing Carriers of this tariff, hereinafter the Telephone Company. This tariff also contains Access Ordering regulations and charges that are applicable when these services are ordered or modified by the customer. Pursuant to the Commission's Rules, regulations concerning administration and billing of Lifeline Assistance and Universal Service Fund, rates and charges for these carrier's carrier elements are contained in Section 8 of the National Exchange Carrier Association Tariff F.C.C. No. 5. The National Exchange Carrier Association, Inc. will bill and collect all Lifeline Assistance and Universal Service Fund Charges on behalf of the Telephone Company.

1.2 The provision of such services by the Telephone Company as set forth in this tariff does not constitute a joint undertaking with the customer for the furnishing of any service.

1.3 All rates and charges set forth in this tariff provide for the furnishing of service where suitable facilities are available, and for installation in normal locations under normal working conditions, as determined by the Telephone Company. When special construction of access facilities is involved or when expedited or other abnormal installation is required, additional charges may apply and such charges based on the estimated costs associated with such special construction or installation will be developed as occasion requires. Special construction is involved when, at the request of a customer or group of customers, the Telephone Company constructs access facilities in order to provide service, and conditions, such as one or more of the following are present:

(a) There is no requirement for the facilities so constructed, other than to furnish the requested service.
(b) The facilities are of a type, or over a routing, other than that which the Telephone Company would normally utilize.
(c) The Telephone Company constructs a greater quantity of facilities than it would otherwise construct in order to fulfill the initial requirements of service.
(d) The Telephone Company expedites construction at greater expense than would otherwise be incurred.
(e) The Telephone Company constructs temporary facilities to provide service for the period during which permanent facilities are under construction.

Special construction, when ordered by the customer will be provided and filed in this tariff.

2. General Regulations

2.1 Undertaking of the Telephone Company

2.1.1 Scope

(A) The Telephone Company does not undertake to transmit messages under this tariff.

(B) The Telephone Company shall be responsible only for the installation, operation and maintenance of the services it provides.

(C) The Telephone Company will, for maintenance purposes, test its service only to the extent necessary to detect and/or clear troubles.

(D) Services are provided 24 hours daily, seven days per week, except as set forth in other applicable sections of this tariff.

(E) The Telephone Company does not warrant that its facilities and services meet standards other than those set forth in this tariff.

2.1.2 Limitations

(A) Assignment or Transfer of Services

The customer may assign or transfer the use of services provided under this tariff only where there is no interruption of use or relocation of the services. Such assignment or transfer may be made to:

(1) another customer, whether an individual, partnership, association or corporation, provided the assignee or transferee assumes all outstanding indebtedness for such services, and the unexpired portion of the minimum period and the termination liability applicable to such services, if any; or

2. General Regulations (Cont'd)\

2.1 Undertaking of the Telephone Company (Cont'd)

2.1.2 Limitations (Cont'd)

(A) Assignment or Transfer of Services (Cont'd)

(2) a court-appointed receiver, trustee or other person acting pursuant to law in bankruptcy, receivership, reorganization, insolvency, liquidation or other similar proceedings, provided the assignee or transferee assumes the unexpired portion of the minimum period and the termination liability applicable to such services, if any.

In all cases of assignment or transfer, the written acknowledgement of the Telephone Company is required prior to such assignment or transfer. This acknowledgement shall be made within 15 days from the receipt of notification. All regulations and conditions contained in this tariff shall apply to such assignee or transferee.

The assignment or transfer of services does not relieve or discharge the assignor or transferor from remaining jointly or severally liable with the assignee or transferee for any obligations existing at the time of the assignment or transfer.

(B) Use and Restoration of Services

The use and restoration of services shall be in accordance with Part 64, Subpart D, Appendix A, of the Federal Communications Commission's Rules and Regulations, which specifies the priority system for such activities.

(C) Sequence of Provisioning

Subject to compliance with the rules mentioned in (B) preceding, the services offered herein will be provided to customers on a first-come, first-served basis.

The first-come, first-served sequence shall be based upon the received time and date recorded, by stamp or other notation, by the Telephone Company on customer access orders. These orders must contain all the information as required for each respective service as delineated in other sections of this tariff. Customer orders shall not be deemed to have been received until such information is provided. Should questions arise which preclude order issuance due to missing information or the need for clarification, the Telephone Company will attempt to seek such missing information or clarification on a verbal basis.

2. General Regulations (Cont'd)

2.1 Undertaking of the Telephone Company (Cont'd)

2.1.3 Liability

(A) Limits of Liability

The Telephone Company's liability, if any, for its willful misconduct is not limited by this tariff. With respect to any other claim or suit, by a customer or by any others, for damages associated with the installation, provision, termination, maintenance, repair or restoration of service, and subject to the provisions of (B) through (G) following, the Telephone Company's liability if any, shall not exceed an amount equal to the proportionate charge for the service for the period during which the service was affected. This liability for damages shall be in addition to any amounts that may otherwise be due the customer under this tariff as a Credit Allowance for a Service Interruption.

(B) Acts or Omissions

The Telephone Company shall not be liable for any act or omission of any other carrier or customer providing a portion of a service, nor shall the Telephone Company for its own act or omission hold liable any other carrier or customer providing a portion of a service.

(C) Damages to Customer Premises

The Telephone Company is not liable for damages to the customer premises resulting from the furnishing of a service, including the installation and removal of equipment and associated wiring, unless the damage is caused by the Telephone Company's negligence.

(D) Indemnification of Telephone Company

(1) By the End User

The Telephone Company shall be indemnified, defended and held harmless by the end user against any claim, loss or damage arising from the end user's use of services offered under this tariff, involving:

(a) Claims for libel, slander, invasion of privacy, or infringement of copyright arising from the end user's own communications;

(b) Claims for patent infringement arising from the end user's acts combining or using the service furnished by the Telephone Company in connection with facilities or equipment furnished by the end users or customer or;

2. General Regulations (Cont'd)

2.1 Undertaking of the Telephone Company (Cont'd)

2.1.3 Liability (Cont'd)

(D) Indemnification of Telephone Company (Cont'd)

(1) By the End User (Cont'd)

(c) All other claims arising out of any act or omission of the end user in the course of using services provided pursuant to this tariff.

(2) By the Customer

The Telephone Company shall be indemnified, defended and held harmless by the customer against any claim, loss or damage arising from the customer's use of services offered under this tariff, involving:

(a) Claims for libel, slander, invasion of privacy, or infringement of copyright arising from the customer's own communications;

(b) Claims for patent infringement arising from the customer's acts combining or using the service furnished by the Telephone Company in connection with facilities or equipment furnished by the end user or customer or;

(c) All other claims arising out of any act or omission of the customer in the course of using services provided pursuant to this tariff.

(E) Explosive Atmospheres

The Telephone Company does not guarantee or make any warranty with respect to its services when used in an explosive atmosphere. The Telephone Company shall be indemnified, defended and held harmless by the customer from any and all claims by any person relating to such customer's use of services so provided.

(F) No License Granted

No license under patents (other than the limited license to use) is granted by the Telephone Company or shall be implied or arise by estoppel, with respect to any service offered under this tariff. The Telephone Company will defend the customer against claims of patent infringement arising solely from the use by the customer of services offered under this tariff and will indemnify such customer for any damages awarded based solely on such claims.

(G) Circumstances Beyond the Telephone Company's Control

The Telephone Company's failure to provide or maintain services under this tariff shall be excused by labor difficulties, governmental orders, civil commotions, criminal actions taken against the Telephone Company, acts of God and other circumstances beyond the Telephone Company's reasonable control, subject to the Credit Allowance for a Service Interruption as set forth in 2.4.4 following.

2. General Regulations (Cont'd)

2.1 Undertaking of the Telephone Company (Cont'd)

2.1.4 Provision of Services

The Telephone Company will provide to the customer, upon reasonable notice, services offered in other applicable sections of this tariff at rates and charges specified therein. Services will be made available to the extent that such services are or can be made available with reasonable effort, and after provision has been made for the Telephone Company's telephone exchange services.

2.1.5 Facility Terminations

The services provided under this tariff will include any entrance cable or drop wiring and wire or intrabuilding cable to that point where provision is made for termination of the Telephone Company's outside distribution network facilities at a suitable location inside a customer-designated premises. Such wiring or cable will be installed by the Telephone Company to the Point of Termination. Moves of the Point of Termination at the customer designated premises will be as set forth in 6.4.4 and 7.2.3 following.

2.1.6 Service Maintenance

The services provided under this tariff shall be maintained by the Telephone Company. The customer or others may not rearrange, move, disconnect, remove or attempt to repair any facilities provided by the Telephone Company, other than by connection or disconnection to any interface means used, except with the written consent of the Telephone Company.

2. General Regulations (Cont'd)

2.1 Undertaking of the Telephone Company (Cont'd)

2.1.7 Changes and Substitutions

Except as provided for equipment and systems subject to FCC Part 68 Regulations at 47 C.F.R. Section 68.110(b), the Telephone Company may, where such action is reasonably required in the operation of its business, substitute, change or rearrange any facilities used in providing service under this tariff. Such actions may include, without limitation:

- substitution of different metallic facilities,
- substitution of carrier or derived facilities for metallic facilities used to provide other than metallic facilities,
- substitution of metallic facilities for carrier or derived facilities used to provide other than metallic facilities,
- substitution of fiber or optical facilities,
- change of minimum protection criteria,
- change of operating or maintenance characteristics of facilities, or
- change of operations or procedures of the Telephone Company.

In case of any such substitution, change or rearrangement, the transmission parameters will be within the range as set forth in Section 15 following. The Telephone Company shall not be responsible if any such substitution, change or rearrangement renders any customer furnished services obsolete or requires modification or alteration thereof or otherwise affects their use or performance. If such substitution, change or rearrangement materially affects the operating characteristics of the facility, the Telephone Company will provide reasonable notification to the customer in writing. Reasonable time will be allowed for any redesign and implementation required by the change in operating characteristics. The Telephone Company will work cooperatively with the customer to determine reasonable notification procedures.

2. General Regulations (Cont'd)

2.1 Undertaking of the Telephone Company (Cont'd)

2.1.8 Refusal and Discontinuance of Service

(A) If a customer fails to comply with 2.1.6 preceding (Service Maintenance) or 2.3.1, 2.3.4, 2.3.6, 2.4.1 or 2.5 following (respectively, Damages, Availability for Testing, Balance, Payment Arrangements, Connections) including any customers failure to make payments on the date and times therein specified, the Telephone Company may, on thirty (30) days written notice to the customer by Certified U.S. Mail, take the following actions:

- refuse additional applications for service and/or refuse to complete any pending orders for service, and/or

- discontinue the provision of service to the customer.

In the case of discontinuance all applicable charges, including termination charges, shall become due.

(B) If a customer fails to comply with 2.2.2 following (Unlawful and Abusive Use), the Telephone Company may, upon written request from a customer, or another exchange carrier, terminate service to any subscriber or customer identified as having utilized service provided under this tariff in the completion of abusive or unlawful telephone calls. Service shall be terminated by the Telephone Company as provided for in its general and/or local exchange service tariffs.

In such instances when termination occurs the Telephone Company shall be indemnified, defended and held harmless by any customer or Exchange Carrier requesting termination of service against any claim, loss or damage arising from the Telephone Company's actions in terminating such service, unless caused by the Telephone Company's negligence.

2. General Regulations (Cont'd)

2.1 Undertaking of the Telephone Company (Cont'd)

2.1.8 Refusal and Discontinuance of Service (Cont'd)

(C) Except as provided for equipment or systems subject to the FCC Part 68 Rules in 47 C.F.R. Section 68.108, if the customer fails to comply with 2.2.1 following (Interference or Impairment), the Telephone Company will, where practicable, notify the customer that temporary discontinuance of the use of a service may be required; however, where prior notice is not practicable, the Telephone Company may temporarily discontinue service forthwith if such action is reasonable in the circumstances. In case of such temporary discontinuance, the customer will be notified promptly and afforded the opportunity to correct the condition which gave rise to the temporary discontinuance. During such period of temporary discontinuance, credit allowance for service interruptions as set forth in 2.4.4 following is not applicable.

(D) When access service is provided by more than one Telephone Company, the companies involved in providing the joint service may individually or collectively deny service to a customer for nonpayment. Where the Telephone Company(s) affected by the nonpayment is incapable of effecting discontinuance of service without cooperation from the other joint providers of Switched Access Service, such other Telephone Company(s) will, if technically feasible, assist in denying the joint service to the customer. Service denial for such joint service will only include calls originating or terminating within, or transiting, the operating territory of the Telephone Companies initiating the service denial for nonpayment. When more than one of the joint providers must deny service to effectuate termination for nonpayment, in cases where a conflict exists in the applicable tariff provisions, the tariff regulations of the end office Telephone Company shall apply for joint service discontinuance.

(E) If the Telephone Company does not refuse additional applications for service and/or does not discontinue the provision of the services as specified for herein, and the customer's noncompliance continues, nothing contained herein shall preclude the Telephone Company's right to refuse additional applications for service and/or to discontinue the provision of the services to the non-complying customer without further notice.

2. General Regulations (Cont'd)

2.1 Undertaking of the Telephone Company (Cont'd)

2.1.9 Notification of Service-Affecting Activities

The Telephone Company will provide the customer reasonable notification of service-affecting activities that may occur in the normal operation of its business. Such activities may include, but are not limited to the following:

- equipment or facilities additions,
- removals or rearrangements,
- routine preventative maintenance, and
- major switching machine change-out.

Generally, such activities are not individual customer service specific, but may affect many customer services. No specific advance notification period is applicable to all service activities. The Telephone Company will work cooperatively with the customer to determine reasonable notification requirements.

2.1.10 Coordination with Respect to Network Contingencies

The Telephone Company intends to work cooperatively with the customer to develop network contingency plans in order to maintain maximum network capability following natural or man-made disasters which affect telecommunications services.

2.1.11 Provision and Ownership of Telephone Numbers

The Telephone Company reserves the reasonable right to assign, designate or change telephone numbers, any other call number designations associated with Access Services, or the Telephone Company serving central office prefixes associated with such numbers, when necessary in the conduct of its business. Should it become necessary to make a change in such number(s), the Telephone Company will furnish to the customer six (6) months notice, by Certified U.S. Mail, of the effective date and an explanation of the reason(s) for such change(s).

2. General Regulations (Cont'd)

2.2 Use

2.2.1 Interference or Impairment

The characteristics and methods of operation of any circuits, facilities or equipment provided by other than the Telephone Company and associated with the facilities utilized to provide services under this tariff shall not:

- interfere with or impair service over any facilities of the Telephone Company, its affiliated companies, or its connecting and concurring carriers involved in its services,
- cause damage to their plant,
- impair the privacy of any communications carried over their facilities, or
- create hazards to the employees of any of them or the public.

2.2.2 Unlawful and Abusive Use

(A) The service provided under this tariff shall not be used for an unlawful purpose or used in an abusive manner.

Abusive use includes:

(1) The use of the service of the Telephone Company for a call or calls, anonymous or otherwise, in a manner reasonably expected to frighten, abuse, torment, or harass another;

(2) The use of the service in such a manner as to interfere unreasonably with the use of the service by one or more other customers.

2. General Regulations (Cont'd)

2.3 Obligations of the Customer

2.3.1 Damages

The customer shall reimburse the Telephone Company for damages to Telephone Company facilities utilized to provide services under this tariff caused by the negligence or willful act of the customer or resulting from the customer's improper use of the Telephone Company facilities, or due to malfunction of any facilities or equipment provided by other than the Telephone Company. Nothing in the foregoing provision shall be interpreted to hold one customer liable for another customer's actions. The Telephone Company will, upon reimbursement for damages, cooperate with the customer in prosecuting a claim against the person causing such damage and the customer shall be subrogated to the right of recovery by the Telephone Company for the damages to the extent of such payment.

2.3.2 Ownership of Facilities and Theft

Facilities utilized by the Telephone Company to provide service under the provisions of this tariff shall remain the property of the Telephone Company. Such facilities shall be returned to the Telephone Company by the customer, whenever requested, within a reasonable period. The equipment shall be returned in as good condition as reasonable wear will permit.

2.3.3 Equipment Space and Power

The customer shall furnish or arrange to have furnished to the Telephone Company, at no charge, equipment space and electrical power required by the Telephone Company to provide services under this tariff at the points of termination of such services. The selection of ac or dc power shall be mutually agreed to by the customer and the Telephone Company. The customer shall also make necessary arrangements in order that the Telephone Company will have access to such spaces at reasonable times for installing, testing, repairing or removing Telephone Company facilities used to provide services.

2.3.4 Availability for Testing

Access to facilities used to provide services under this tariff shall be available to the Telephone Company at times mutually agreed upon in order to permit the Telephone Company to make tests and adjustments appropriate for maintaining the services in satisfactory operating condition. Such tests and adjustments shall be completed within a reasonable time. As set forth in 2.4.4(C)(4) following, no credit will be allowed for any interruptions involved during such tests and adjustments.

2. General Regulations (Cont'd)

2.3 Obligations of the Customer (Cont'd)

2.3.5 Limitation of Use of Metallic Facilities

Signals applied to a metallic facility shall conform to the limitations set forth in Technical Reference Publication AS No. 1. In the case of application of dc telegraph signaling systems, the customer shall be responsible, at its expense, for the provision of current limiting devices to protect the Telephone Company facilities from excessive current due to abnormal conditions and for the provision of noise mitigation networks when required to reduce excessive noise.

2.3.6 Balance

All signals for transmission over the facilities used to provide services under this tariff shall be delivered by the customer balanced to ground except for ground start, duplex (DX) and McCulloch-Loop (Alarm System) type signaling and dc telegraph transmission at speeds of 75 baud or less.

2.3.7 Design of Customer Services

Subject to the provisions of 2.1.7 preceding (Changes and Substitutions), the customer shall be solely responsible, at its own expense, for the overall design of its services and for any redesigning or rearrangement of its services which may be required because of changes in facilities, operations or procedures of the Telephone Company, minimum protection criteria or operating or maintenance characteristics of the facilities.

2.3.8 References to the Telephone Company

The customer may advise end users that certain services are provided by the Telephone Company in connection with the service the customer furnishes to end users; however, the customer shall not represent that the Telephone Company jointly participates in the customer's services.

2. General Regulations (Cont'd)

2.3 Obligations of the Customer (Cont'd)

2.3.9 Claims and Demands for Damages

(A) With respect to claims of patent infringement made by third persons, the customer shall defend, indemnify, protect and save harmless the Telephone Company from and against all claims arising out of the combining with, or use in connection with, the services provided under this tariff, any circuit, apparatus, system or method provided by the customer.

(B) The customer shall defend, indemnify and save harmless the Telephone Company from and against any suits, claims, losses and damages, including punitive damages, attorney fees and court costs by third persons arising out of the construction, installation, operation, maintenance, or removal of the customer's circuits, facilities, or equipment connected to the Telephone Company's services provided under this tariff including, without limitation, Worker's Compensation claims, actions for infringement of copyright and/or unauthorized use of program material, libel and slander actions based on the content of communications transmitted over the customer's circuits, facilities or equipment, and proceedings to recover taxes, fines, or penalties for failure of the customer to obtain or maintain in effect any necessary certificates, permits, licenses, or other authority to acquire or operate the services provided under this tariff; provided, however, the foregoing indemnification shall not apply to suits, claims, and demands to recover damages for damage to property, death, or personal injury unless such suits, claims or demands are based on the tortious conduct of the customer, its officers, agents or employees.

(C) The customer shall defend, indemnify and save harmless the Telephone Company from and against any suits, claims, losses or damages, including punitive damages, attorney fees and court costs by the customer or third parties arising out of any act of omission of the customer in the course of using services provided under this tariff.

2.3.10 Coordination with Respect to Network Contingencies

The customer shall, in cooperation with the Telephone Company, coordinate in planning the actions to be taken to maintain maximum network capability following natural or man-made disasters which affect telecommunications services.

2. General Regulations (Cont'd)

2.3 Obligations of the Customer (Cont'd)

2.3.11 Jurisdictional Report and Certification Requirements

(A) Certification Requirements - Special Access, Digital Subscriber Line Access and Public Packet Data Network Services

When the customer orders Special Access Service, Digital Subscriber Line Access Service* and Public Packet Data Network Services, and the customer certifies to the Telephone Company in writing that more than ten percent of the traffic is interstate, the service is considered to be interstate and is provided under this Tariff.

Following initial certification, should the jurisdictional nature of the customer's Special Access, Digital Subscriber Line Access or Public Packet Data Network Service change, the customer should inform the Telephone Company in writing of the change. The effective date of the change will be the date the Telephone Company receives the customer's notice of change. No charge applies for the jurisdictional change.

(B) Disputes Involving Jurisdictional Certification - Special Access, Digital Access and Public Packet Data Network Services

If a dispute arises concerning the certification of projected interstate traffic as described in (A) above, the Telephone Company will ask the customer to provide the data the customer used to determine that more than 10% of the traffic is interstate. The customer shall supply the data within thirty (30) days of the Telephone Company request. If the reply results in a jurisdictional change of a Special Access Service or Public Packet Data Network, the effective date of the change will be the date the Telephone Company receives the customer's reply. There is no charge when the customer's reply results in a jurisdictional change in the Special Access or Public Packet Data Network Service.

(C) Jurisdictional Reports - Switched Access

For Switched Access Service, the Telephone Company cannot in all cases determine the jurisdictional nature of customer traffic and its related access minutes. In such cases the customer may be called upon to provide a projected estimate of its traffic, split between the interstate and intrastate jurisdictions. The following regulations govern such estimates, their reporting by the customer and cases where the Telephone Company will develop jurisdictional percentages.

* Digital Subscriber Line Access Service for connections to the Internet is classified as interstate service provided under this tariff in compliance with the Federal Communications Commission's Memorandum Opinion and Order released October 30, 1998 (FCC 98-292).

2. General Regulations (Cont'd)

2.3 Obligations of the Customer (Cont'd)

2.3.11 Jurisdictional Report Requirements (Cont'd)

(C) Jurisdictional Reports - Switched Access (Cont'd)

(1) General (Cont'd)

Except where Telephone Company measured access minutes are used as set forth following, the customer shall report the percentage of interstate use as set forth in (2) or (3) following and such report will be used for billing purposes until the customer reports a different interstate percentage for and in-service end office group. When the customer adds BHMC, lines or trunks to an existing end office group, the customer shall furnish a revised projected interstate percentage that applies to the total BHMC, lines or trunks. When the customer discontinues BHMC, lines or trunks from an existing group, the customer shall furnish a revised projected interstate percentage for the remaining BHMC, lines or trunks in the end office group. The revised report will serve as the basis for future billing and will be effective on the next bill date. No prorating or back billing will be done based on the report.

Effective on the first of January, April, July and October of each year the customer shall update the interstate and intrastate jurisdictional report. The customer shall forward to the Telephone Company, to be received no later than fifteen (15) days after the first of each such month, a revised report showing the interstate and intrastate percentage of use for the past three months ending the last day of December, March, June and September, respectively, for each service arranged for interstate use. Except where the Telephone Company is billing according to actuals by jurisdiction, the revised report will serve as the basis for the next three months billing and will be effective on the bill date for that service. No prorating or back billing will be done based on the report.

If the customer does not supply the reports, the Telephone Company will assume the percentages to be the same as those provided in the last quarterly report. For those cases in which a quarterly report has never been received from the customer, the Telephone Company will assume the percentages to be the same as those provided in the order for service as set forth in (2) through (4) following.

Pursuant to Federal Communications Commission Order FCC 85-145 released April 16, 1985, interstate usage is to be developed as though every call that enters a customer network at a point within the same state as that in which the called station (as designated by the called station telephone number) is situated is an intrastate communication and every call for which the point of entry is a state other than that where the called station (as designated by the called station telephone number) is situated is an interstate communication.

2. General Regulations (Cont'd)

2.3 Obligations of the Customer (Cont'd)

2.3.11 Jurisdictional Report Requirements - Switched Access (Cont'd)

(C) Jurisdictional Reports - Switched Access (Cont'd)

(1) General (Cont'd)

The PIUs described in (2) through (4) following are applied to usage rated Carrier Common Line, Information Surcharge, Local Switching, Tandem Switched Transport and Residual Interconnection charges. Separate PIUs are required for flat rated Entrance Facilities, Direct Trunked Transport and Multiplexers.

(2) Feature Groups A and B

(a) When a customer orders Feature Group A or Feature Group B Switched Access Service the customer shall, in its order, state the projected interstate percentage for interstate usage for each Feature Group A or Feature Group B Switched Access Service group ordered. The term group shall be construed to mean single lines or trunks as well. If the customer discontinues some but not all of the Feature Group A or Feature Group B Switched Access Services in a group, it shall provide the projected interstate percentage for such services which are remaining.

(b) For multiline hunt group or trunk group arrangements where either the interstate or the intrastate charges are based on measured usage, the interstate Feature Group A or Feature Group B Switched Access Service(s) information will be used to determine the charges. For all groups the number of access minutes (either measured or assumed) for a group will be multiplied by the projected interstate percentage to develop the interstate access minutes. The number of access minutes for the group minus the developed interstate access minutes for the group will be the developed intrastate access minutes.

(3) Feature Groups C and D

When a customer orders Feature Group C or Feature Group D Switched Access Service(s) the customer may provide the projected interstate usage for each end office in its order. Alternatively the Telephone Company, where the jurisdiction can be determined from the call detail, will determine the projected interstate percentage as follows:

2. General Regulations (Cont'd)

2.3 Obligations of the Customer (Cont'd)

2.3.11 Jurisdictional Report Requirements - Switched Access (Cont'd)

(C) Jurisdictional Reports - Switched Access (Cont'd)

(3) Feature Groups C and D (Cont'd)

- For originating access minutes, the projected interstate percentage will be developed on a monthly basis by end office where the Feature Group C or Feature Group D Switched Access Service access minutes are measured by dividing the measured interstate originating access minutes (the access minutes where the calling number is in one state and the called number is in another state) by the originating access minutes, when the call detail is adequate to determine the proper jurisdiction.

- For terminating access minutes, the data used by the Telephone Company to develop the projected interstate percentage for originating access minutes will be used to develop the projected interstate percentage for such terminating access minutes.

When originating call details are insufficient to determine the jurisdiction for the call, the customer shall pay the projected interstate percentage or authorize the Telephone Company to use the Telephone Company developed percentage. This percentage shall be used by the Telephone Company as the projected interstate percentage for originating and terminating access minutes. The projected intrastate percentage of use will be obtained by subtracting the projected interstate percentage for originating and terminating minutes from 100 (intrastate percentage = 100 - interstate percentage).

(D) Billing Disputes Involving Jurisdictional Reports - Switched Access

For Switched Access, if a billing dispute arises concerning the projected interstate percentage, the Telephone Company will ask the customer to provide the data the customer uses to determine the projected interstate percentage. The Telephone Company will not request such data more than once a year. The customer shall supply the data within thirty (30) days of the Telephone Company request.

2. General Regulations (Cont'd)

2.3 Obligations of the Customer (Cont'd)

2.3.12 Determination of Interstate Charges for Mixed Interstate and Intrastate Switched Access Service

When mixed interstate and intrastate Switched Access Service is provided, all charges (i.e., nonrecurring, monthly and/or usage) including optional features charges, will be prorated between interstate and intrastate. The percentage determined as set forth in 2.3.11 preceding will serve as the basis for prorating the charges unless the Telephone Company is billing according to actuals by jurisdiction. The percentage of an Access Service to be charged as interstate is applied in the following manner:

(A) Monthly and Nonrecurring Charges

For monthly and nonrecurring chargeable rate elements, multiply the percent interstate use times the quantity of chargeable elements times the stated tariff rate.

(B) Usage Sensitive Charges

For usage sensitive (i.e., access minutes and calls) chargeable rate elements, multiply the percent interstate use times actual use (i.e., measured or Telephone Company assumed average use) times the stated tariff rate.

The interstate percentage may change as revised usage reports are submitted as set forth in 2.3.11 preceding.

2. General Regulations (Cont'd)

2.4 Payment Arrangements and Credit Allowances

2.4.1 Payment of Rates, Charges and Deposits

(A) Deposits

The Telephone Company will only require a customer which has a proven history of late payments to the Telephone Company or does not have established credit, to make a deposit prior to or at any time after the provision of a service to the customer. No such deposit will be required of a customer which is a successor of a company which has established credit and has no history of late payments to the Telephone Company. Such deposit will not exceed the actual or estimated rates and charges for the service for a two month period. The fact that a deposit has been made in no way relieves the customer from complying with the Telephone Company's regulations as to the prompt payment of bills. At such time as the provision of the service to the customer is terminated, the amount of the deposit will be credited to the customer's account and any credit balance which may remain will be refunded.

Such a deposit will be refunded or credited to the account when the customer has established credit or, in any event, after the customer has established a one-year prompt payment record at any time prior to the termination of the provision of the service to the customer. In case of a cash deposit, for the period the deposit is held by the Telephone Company, the customer will receive interest at the same percentage rate as that set forth in (C)(2)(a) or in (C)(2)(b) following, whichever is lower.

The rate will be compounded daily for the number of days from the date the customer deposit is received by the Telephone Company to and including the date such deposit is credited to the customer's account or the date the deposit is refunded by the Telephone Company. Should a deposit be credited to the customer's account, as indicated above, no interest will accrue on the deposit from the date such deposit is credited to the customer's account.

2. General Regulations (Cont'd)

2.4 Payment Arrangements and Credit Allowances (Cont'd)

2.4.1 Payment of Rates, Charges and Deposits (Cont'd)

(B) Bill Dates

The Telephone Company shall bill on a current basis all charges incurred by and credits due to the customer under this tariff attributable to services established or discontinued during the preceding billing period. In addition, the Telephone Company shall bill in advance charges for all services to be provided during the ensuing billing period except for charges associated with service usage and for the Federal Government which will be billed in arrears. The bill day (i.e., the billing date of a bill for a customer for Access Service under this tariff), the period of service each bill covers and the payment date will be as follows:

(1) End User Access Service, Digital Subscriber Line and Presubscription

For End User Access Service, Digital Subscriber Access Line Service and Presubscription Service, the Telephone Company will establish a bill day each month for each end user account or advise the customer in writing of an alternate billing schedule. Alternate billing schedules shall not be established on less than 60 days notice or initiated by the Telephone Company more than twice in any consecutive 12 month period. The bill will cover End User Access Service and Digital Subscriber Line Access Service charges for the ensuing billing period except for End User Access Service and Digital Subscriber Line Access Service for the Federal Government which will be billed in arrears. Any applicable PIC Charges, any known unbilled charges for prior periods and any known unbilled adjustments for prior periods for End User Access Service, Digital Subscriber Line Access Service and Presubscription Service will be applied to this bill. Such bills are due when rendered.

(2) Access Services Other Than End User, Digital Subscriber Line and Presubscription

For Service other than End User Access Service, Digital Subscriber Line Access Service and Presubscription Service, the Telephone Company will establish a bill day each month for each customer account or advise the customer in writing of an alternate billing schedule. Alternate billing schedules shall not be established on less than 60 days notice or initiated by the Telephone Company more than twice in any consecutive 12 month period.

The bill will cover non usage sensitive service charges for the ensuing billing period for which the bill is rendered, any known unbilled non usage sensitive charges for prior periods and unbilled usage charges for the period after the last bill day through the current bill day. Any known unbilled usage charges for prior periods and any known unbilled adjustments will be applied to this bill. Payment for such bills is due in immediately available funds by the payment date, as set forth in (C) following. If payment is not received by the payment date, a late payment penalty will apply as set forth in (C) following.

2. General Regulations (Cont'd)

2.4 Payment Arrangements and Credit Allowances (Cont'd)

2.4.1 Payment of Rates, Charges and Deposits (Cont'd)

(C) Payment Dates and Late Payment Penalties

(1) All bills dated as set forth in (B)(2) preceding for service, other than End User Service, Digital Subscriber Line Access Service and Presubscription Service, provided to the customer by the Telephone Company are due 31 days (payment date) after the bill day or by the next bill date (i.e., same date in the following month as the bill date), whichever is the shortest interval, except as provided herein, and are payable in immediately available funds. If the customer does not receive a bill at least 20 days prior to the 31 day payment due date, then the bill shall be considered delayed. When the bill has been delayed, upon request of the customer the due date will be extended by the number of days the bill was delayed. Such request of the customer must be accompanied with proof of late bill receipt.

2. General Regulations (Cont'd)

2.4 Payment Arrangements and Credit Allowances (Cont'd)

2.4.1 Payment of Rates, Charges and Deposits (Cont'd)

(C) Payment Dates and Late Payment Penalties (Cont'd)

(1) (Cont'd)

If such payment date would cause payment to be due on a Saturday, Sunday or Legal Holiday, payment for such bills will be due from the customer as follows:

- If the payment date falls on a Sunday or on a Legal Holiday which is observed on a Monday, the payment date shall be the first non-Holiday day following such Sunday or Legal Holiday.

- If the payment date falls on a Saturday or on a Legal Holiday which is observed on Tuesday, Wednesday, Thursday or Friday, the payment date shall be the last non-Holiday day preceding such Saturday or Legal Holiday.

EXAMPLE: CALCULATION OF PAYMENT DATES

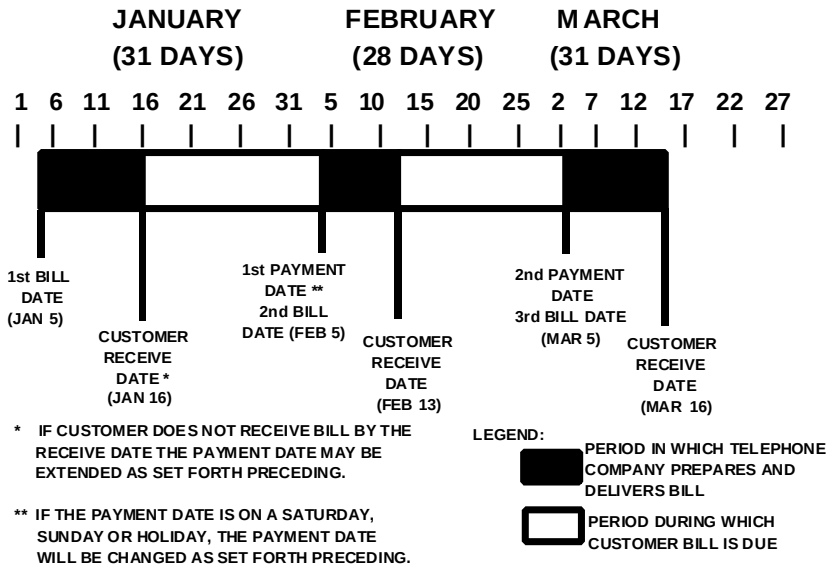

2. General Regulations (Cont'd)

2.4 Payment Arrangements and Credit Allowances (Cont'd)

2.4.1 Payment of Rates, Charges and Deposits (Cont'd)

(C) Payment Dates and Late Payment Penalties (Cont'd)

(2) Further, if no payment is received by the payment date or if a payment or any portion of a payment is received by the Telephone Company after the payment date as set forth in (1) preceding, or if a payment or any portion of a payment is received by the Telephone Company in funds which are not immediately available to the Telephone Company, then a late payment penalty shall be due to the Telephone Company. The late payment penalty shall be the payment or the portion of the payment not received by the payment date times a late factor. The late factor shall be the lesser of:

(a) the highest interest rate (in decimal value) which may be levied by law for commercial transactions, compounded daily for the number of days from the payment date to and including the date that the customer actually makes the payment to the Telephone Company, or

(b) 0.000292 per day, compounded daily for the number of days from the payment date to and including the date that the customer actually makes the payment to the Telephone Company.

(D) Billing Disputes Resolved in Favor of the Telephone Company

Late payment charges will apply to amounts withheld pending settlement of the dispute. Late payment charges are calculated as set forth in (C)(2) preceding except that when the customer disputes the bill on or before the payment date and pays the undisputed amount on or before the payment date, the penalty interest period shall not begin until 10 days following the payment date.

2. General Regulations (Cont'd)

2.4 Payment Arrangements and Credit Allowances (Cont'd)

2.4.1 Payment of Rates, Charges and Deposits (Cont'd)

(E) Billing Disputes Resolved in Favor of the Customer

If the customer pays the total billed amount and disputes all or part of the amount, the Telephone Company will refund any overpayment. In addition, the Telephone Company will pay to the customer penalty interest on the overpayment. When a claim is filed within 90 days of the due date, the penalty interest period shall begin on the payment date. When a claim is filed more than 90 days after the due date, the penalty interest period shall begin from the date of the claim or the date of overpayment, whichever is later.

The penalty interest period shall end on the date that the Telephone Company actually refunds the overpayment to the customer. The penalty interest rate shall be the lesser of:

(1) the highest interest rate (in decimal value) which may be levied by law for commercial transactions, compounded daily for the number of days from the first date to and including the last date of the period involved, or

(2) 0.000292 per day, compounded daily for the number of days from the first date to and including the last date of the period involved.

(F) Proration of Charges

Adjustments for the quantities of services established or discontinued in any billing prorated to the number of days based on a 30 day month. The Telephone Company will, upon request, furnish within 30 days of a request and at no charge to the customer such detailed information as may reasonably be required for verification of any bill.

(G) Rounding of Charges

When a rate as set forth in this tariff is shown to more than two decimal places, the charges will be determined using the rate shown. The resulting amount will then be rounded to the nearest penny (i.e., rounded to two decimal places).

2. General Regulations (Cont'd)

2.4 Payment Arrangements and Credit Allowances (Cont'd)

2.4.2 Minimum Periods

The minimum period for which services are provided and for which rates and charges are applicable is one month except for those usage rated services set forth in Section 6. (Switched Access Service) and those services set forth in 6.1.3 (Switched Access High Capacity DS3 Entrance Facility and High Capacity DS3 Direct Trunked Transport), 7.2.4, (Part-time Program Audio), and 7.2.8 (High Capacity DS1 and DS3 Service), Synchronous Optical Channel Service, Asynchronous Transfer Mode Cell Relay Access Service Ports or as otherwise specified.

The minimum period for which service is provided and for which rates and charges are applicable for a Specialized Service or Arrangement provided on an individual case basis as set forth in Section 12 following, is one month unless a different minimum period is established with the individual case filing.

When a service is discontinued prior to the expiration of the minimum period, charges are applicable, whether the service is used or not, as follows:

(A) When a service with a one month minimum period is discontinued prior to the expiration of the minimum period, a one month charge will apply at the rate level in effect at the time service is discontinued.

(B) When a service with a minimum period greater than one month is discontinued prior to the expiration of the minimum period, except for DS3 monthly service the applicable charge will be the lesser of (1) the Telephone Company's total non recoverable costs less the net salvage value for the discontinued service or (2) the total monthly charges, at the rate level in effect at the time service is discontinued, for the remainder of the minimum period.

2.4.3 Cancellation of an Order for Service

Provisions for the cancellation of an order for service are set forth in other applicable sections of this tariff.

2. General Regulations (Cont'd)

2.4 Payment Arrangements and Credit Allowances (Cont'd)

2.4.4 Credit Allowance for Service Interruptions

(A) General

A service is interrupted when it becomes unusable to the customer because of a failure of a facility component used to furnish service under this tariff or in the event that the protective controls applied by the Telephone Company result in the complete loss of service by the customer as set forth in 6.2.1 following. An interruption period starts when an inoperative service is reported to the Telephone Company, and ends when the service is operative.

(B) When a Credit Allowance Applies

In case of an interruption to any service, allowance for the period of interruption, if not due to the negligence of the customer, shall be provided.

For Digital Data Access, High Capacity, HC1, Special Access Services, any period during which the error performance is below that specified for the service will be considered as an interruption.

Service interruptions for Specialized Service or Arrangements provided under Section 12 following shall be administered in the same manner as those set forth in this section (2.4.4) unless other regulations are specified with the individual case filing.

Credit allowances are computed as follows:

(1) Special Access Service other than Program Audio, flat rated Switched Access Service and Digital Subscriber Line Access Service rate elements

For Special Access Services other than Program Audio and for flat rated Switched Access Service rate elements (i.e., Entrance Facility, Direct Trunked Transport and Multiplexing) and for Digital Subscriber Line Access Service, no credit shall be allowed for an interruption of less than 30 minutes. The customer shall be credited for an interruption of 30 minutes or more at the rate of 1/1440 of the monthly charges for the facility or service for each period of 30 minutes or Major Fraction Thereof that the interruption continues.

2. General Regulations (Cont'd)

2.4 Payment Arrangements and Credit Allowances (Cont'd)

2.4.4 Credit Allowance for Service Interruptions (Cont'd)

(B) When a Credit Allowance Applies (Cont'd)

(1) Special Access Service other than Program Audio, flat rated Switched Access Service and Digital Subscriber Line Access Service rate elements (Cont'd)

The monthly charges used to determine the credit shall be as follows:

(a) Two-point Services

For two-point services, the monthly charge shall be the total of all the monthly rate element charges associated with the service (i.e., two channel terminations, channel mileage and optional features and functions).

(b) Multipoint Services

For multipoint services, the monthly charge shall be only the total of all the monthly rate element charges associated with that portion of the service that is inoperative (i.e., a channel termination per customer designated premises, channel mileage and optional features and functions).

(c) Multiplexed Services

For multiplexed services, the monthly charge shall be the total of all the monthly rate element charges associated with that portion of the service that is inoperative. When the facility which is multiplexed or the multiplexer itself is inoperative, the monthly charge shall be the total of all the monthly rate element charges associated with the service (i.e., the channel termination, channel mileage, Entrance Facility, Direct Trunked Transport and optional features and functions, including the multiplexer on the facility to the hub, and the channel terminations, channel mileages and optional features and functions on the individual services from the hub). When the service which rides a channel of the multiplexed facility is inoperative, the monthly charge shall be the total of all the monthly rate element charges associated with that portion of the service from the hub to a customer premises (i.e., channel termination, channel mileage, Direct Trunked Transport, and optional features and functions).

2. General Regulations (Cont'd)

2.4 Payment Arrangements and Credit Allowances (Cont'd)

2.4.4 Credit Allowance for Service Interruptions (Cont'd)

(B) When a Credit Allowance Applies (Cont'd)

(1) Special Access Service other than Program Audio, flat rated Switched Access Service and Digital Subscriber Line Access Service rate elements (Cont'd)

(d) Flat rated Switched Access Service and Digital Subscriber Line Access Service Rate Elements

For flat rated Switched Access Service rate elements, the monthly charge shall be the total of all the monthly rate element charges associated with the service (i.e., Entrance Facility, Direct Trunked Transport and Multiplexing).

For flat rated Digital Subscriber Line Access Service, the monthly charge shall be the total of the monthly rate element charge for the Service.

(e) Public Packet Data Network Services

For Public Packet Data Network Service rate elements, the monthly charge shall be the total of all monthly rate element charges associated with the service.

(f) Synchronous Optical Channel Service

For Synchronous Optical Channel Service the monthly charge shall be the total of all monthly rate element charges associated with that portion of the service which is inoperative, (i.e., Channel Termination, Channel Mileage, Customer Node and Customer Premises Port). When the facility provided via an Add/Drop Multiplexer is inoperative, the monthly charge shall be the total of all monthly charges associated with that portion of the service (i.e., Channel Termination, Channel Mileage and Central Office Port).

(2) Program Audio Special Access Services

For Program Audio Special Access Services, no credit shall be allowed for an interruption of less than 30 seconds. The customer shall be credited for an interruption of 30 seconds or more as follows:

(a) For two-point services, when monthly rates are applicable, the credit shall be at the rate of 1/8640 of the monthly charges for the service for each period of 5 minutes or fraction thereof that the interruption continues.

(b) For two-point services, when daily rates are applicable, the credit shall be at the rate of 1/288 of the daily charges for the service for each period of 5 minutes or fraction thereof that the interruption continues.

2. General Regulations (Cont'd)

2.4 Payment Arrangements and Credit Allowances (Cont'd)

2.4.4 Credit Allowance for Service Interruptions (Cont'd)

(B) When a Credit Allowance Applies (Cont'd)

(2) Program Audio Special Access Services (Cont'd)

(c) For multipoint services, when monthly rates are applicable, the credit shall be at the rate of 1/8640 of the monthly charges for each channel termination, channel mileage and optional features and functions that are inoperative for each period of 5 minutes or fraction thereof that the interruption continues.

(d) For multipoint services, when daily rates are applicable, the credit shall be at the daily rate of 1/288 of the daily charges for channel termination, channel mileage and optional features and functions that are inoperative for each period of 5 minutes or fraction thereof that the interruption continues.

(e) For multipoint services, the credit for the monthly or daily charges includes the charges for the distribution amplifier only when the distribution amplifier is inoperative.

(f) When two or more interruptions occur during a period of 5 consecutive minutes, such multiple interruptions shall be considered as one interruption.

(3) Switched Access Service Usage Rated Elements

For Switched Access Service usage rated elements, no credit shall be allowed for an interruption of less than 24 hours. The customer shall be credited for an interruption of 24 hours or more at the rate of 1/30 of any applicable monthly rate or assumed minutes of use charge for each period of 24 hours or major fraction thereof that the interruption continues.

(4) Credit Allowances Cannot Exceed Monthly Rate

The credit allowance(s) for an interruption or for a series of interruptions shall not exceed any monthly rate for the service interrupted in any one monthly billing period.

2. General Regulations (Cont'd)

2.4 Payment Arrangements and Credit Allowances (Cont'd)

2.4.4 Credit Allowance for Service Interruptions (Cont'd)

(C) When a Credit Allowance Does Not Apply

No credit allowance will be made for:

(1) Interruptions caused by the negligence of the customer.

(2) Interruptions of a service due to the failure of equipment or systems provided by the customer or others.

(3) Interruptions of a service during any period in which the Telephone Company is not afforded access to the premises where the service is terminated.

(4) Interruptions of a service when the customer has released that service to the Telephone Company for maintenance purposes, to make rearrangements, or for the implementation of an order for a change in the service during the time that was negotiated with the customer prior to the release of that service. Thereafter, a credit allowance as set forth in (B) preceding applies.

(5) Interruptions of a service which continue because of the failure of the customer to authorize replacement of any element of special construction. The period for which no credit allowance is made begins on the seventh day after the customer receives the Telephone Company's written notification of the need for such replacement and ends on the day after receipt by the Telephone Company of the customer's written authorization for such replacement.

(6) Periods when the customer elects not to release the service for testing and/or repair and continues to use it on an impaired basis.

(7) An interruption or a group of interruptions, resulting from a common cause, that would result in credit in an amount less than one dollar.

(D) Use of an Alternative Service Provided by the Telephone Company

Should the customer elect to use an alternative service provided by the Telephone Company during the period that a service is interrupted, the customer must pay the tariffed rates and charges for the alternative service used.

2. General Regulations (Cont'd)

2.4 Payment Arrangements and Credit Allowances (Cont'd)

2.4.4 Credit Allowance for Service Interruptions (Cont'd)

(E) Temporary Surrender of a Service (Cont'd)

In certain instances, the customer may be requested by the Telephone Company to surrender a service for purposes other than maintenance, testing or activity relating to a service order. If the customer consents, a credit allowance will be granted. The credit allowance will be 1/1440 of the monthly rate for each period of 30 minutes or fraction thereof that the service is surrendered. In no case will the credit allowance exceed the monthly rate for the service surrendered in any one monthly billing period.

2.4.5 Re-establishment of Service Following Fire, Flood or Other Occurrence

(A) Nonrecurring Charges Do Not Apply

Charges do not apply for the re-establishment of service following a fire, flood or other occurrence attributed to an Act of God provided that:

(1) The service is of the same type as was provided prior to the fire, flood or other occurrence.

(2) The service is for the same customer.

(3) The service is at the same location on the same premises.

(4) The re-establishment of service begins within 60 days after Telephone Company service is available. (The 60 day period may be extended a reasonable period if the renovation of the original location on the premises affected is not practical within the allotted time period).

(B) Nonrecurring Charges Apply

Nonrecurring Charges apply for establishing service at a different location on the same premises or at a different premises pending re-establishment of service at the original location.

2. General Regulations (Cont'd)

2.4 Payment Arrangements and Credit Allowances (Cont'd)

2.4.6 Title or Ownership Rights

The payment of rates and charges by customers for the services offered under the provisions of this tariff does not assign, confer or transfer title or ownership rights to proposals or facilities developed or utilized, respectively, by the Telephone Company in the provision of such services.

2.4.7 Access Services Provided By More Than One Telephone Company

When an Access Service is provided by more than one Telephone Company, the Telephone Companies involved will mutually agree upon one of the billing methods as set forth in (B) (1) and (2) following based on the service being provided. The Telephone Companies will notify the customer in writing of the billing method being used. The customer will place the order for the service as set forth in 5.3 following dependent upon the billing method.

(A) Non Meet Point Billing/Feature Group A

Non Meet Point Billing under a Revenue Sharing Agreement is the generally accepted billing method for Feature Group A Switched Access Service. At the agreement of the participating Telephone Companies, Meet Point Billing may apply to jointly provided Feature Group A services as set forth in (B) following.

(1) Single Company Billing/Revenue Sharing

All Telephone Companies jointly providing Feature Group A service will receive an order or a copy of the order, from the customer, as specified in 5.3.1(A) following. The telephone company that provides the dial tone will arrange to provide the service, determine the applicable charges and bill the customer for the entire service in accordance with its Access Services tariff as provided for under a Feature Group A Revenue Sharing Agreement.

(B) Meet Point Billing

Meet Point Billing is required when an access service is provided by multiple Telephone Companies for Feature Groups B, C, and D Switched Access Services, and Special Access. It is optional for Feature Group A Switched Access Service.

Each Telephone Company jointly providing the access service will receive an order or a copy of the order from the customer as specified in 5.3.2 following and arrange to provide the service.

For usage rated access services the access minutes of use will generally be determined by the recording company. Where the recording company is not the Bill Rendering Company, the recording company will provide detailed usage records to the Bill Rendering Company to develop the access minutes.

2. General Regulations (Cont'd)

2.4 Payment Arrangements and Credit Allowances (Cont'd)

2.4.7 Access Services Provided by More Than One Telephone Company (Cont'd)

(B) Meet Point Billing (Cont'd)

The Bill Rendering Company in a single bill arrangement for Feature Groups B, C, and D Switched Access Services, is normally the end user's end office, for WATS usage the Bill Rendering Company is normally the WATS Serving Office. The name of the Bill Rendering Company will be included in the meet point billing notification provided to the customer by all the telephone companies on all meet point billed services.

The non Bill Rendering Company(s) is any Telephone Company(s) in whose territory a segment of the Local Transport or Channel Mileage is provided and/or where the customer's Point of Termination is located.

There are two Meet Point Billing Options, Single Bill and Multiple Bill. These billing options are explained in (1) and (2) following. The Single Bill option is the preferred method. However, when a single bill option can not be agreed to by all telephone companies providing service, the multiple bill option is the default.

Each telephone company must provide meet point billing notification to the customer, in writing, when new service is ordered or thirty days prior to changing an existing meet point arrangement. The notification should include the following:

- The Meet Point Billing Option that will be used,
- The Telephone Company(s) that will render the bill(s),
- The Telephone Company(s) to whom payment(s) should be remitted, and
- The Telephone Company(s) that will provide the bill inquiry function.

A Telephone Company that renders a meet point bill, the Bill Rendering Company, will render the bill in accordance with the industry standards as described in the Multiple Exchange Carrier Access Billing (MECAB) Guidelines and the Multiple Exchange Carrier Ordering and Design (MECOD) Guidelines. The bill will include cross reference(s) to the other telephone Company(s) providing service and common circuit identifiers. Should a billing dispute arise, the terms and conditions of the Bill Rendering company will apply.

2. General Regulations (Cont'd)

2.4 Payment Arrangements and Credit Allowances (Cont'd)

2.4.7 Access Services Provided by More Than One Telephone Company (Cont'd)

(B) Meet Point Billing (Cont'd)

(1) Single Bill Option

The single bill option allows the customer to receive one bill for access services that are provided by more than one company. The single bill option provides the following two billing alternatives:

- Single Bill/Multiple Tariff
- Single Bill/Single Tariff

These options are described following in (a) and (b) respectively.

(a) Single Bill/Multiple Tariff

The single bill/multiple tariff bill is prepared by the Bill Rendering Company but reflects all rates and charges for each connecting company's part of the service based on each company's access tariff.

The Bill Rendering Company will:

- determine and include all recurring and nonrecurring rates and charges for each involved Telephone Company;
- identify each involved Telephone Company's rates and charges separately on the bill;
- forward the bill to the customer and provide a copy of the bill or Companies; and
- advise the customer how to remit the payment, either directly to each Telephone Company involved in the provision of this meet point billed service, or, as a single payment made to the Bill Rendering Company. If payments are to be sent directly to the Bill Rendering Company, the non Bill Rendering Company(s) will provide the customer with written authorization for the payment arrangement.

2. General Regulations (Cont'd)

2.4 Payment Arrangements and Credit Allowances (Cont'd)

2.4.7 Access Services Provided by More Than One Telephone Company (Cont'd)

(B) Meet Point Billing (Cont'd)

(1) Single Bill Option (Cont'd)

(b) Single Bill/Single Tariff

The single bill/single tariff bill provides a meet point bill that is billed completely at the Billing Rendering Company's tariff rates and regulations.

The Bill Rendering Company will:

- determine and include on the access bill all usage data and all other recurring and nonrecurring rates and charges per its access tariff; and
- forward the bill to the customer.

The customer will remit the payment to the Bill Rendering Company.

(2) Multiple Bill Option

Under the Multiple Bill Option each company providing the access service will render an access bill to the customer for its portion of the service based on its access tariff rates and regulations. For switched access Multiple bills, the end office company is generally the Initial Billing Company (IBC).

The IBC is the company that calculates the access minutes to be billed to the customer and provides this data to each connecting company providing service, i.e., the Subsequent Billing Company(s). Each company, IBC and SBC, will:

- prepare its own bill;
- determine its charge(s) for Local Transport, Directory Transport, and/or Channel Mileage as set forth in (3) following;
- determine and include all recurring and nonrecurring rates and charges of its access tariff;
- reflect its Billing Account Reference (BAR) and all connecting company Billing Account Cross Reference (BACR) code(s);
- forward its bill to the customer.

The customer will remit payment directly to each Bill Rendering Company.

2. General Regulations (Cont'd)

2.4 Payment Arrangements and Credit Allowances (Cont'd)

2.4.7 Access Services Provided by More Than One Telephone Company (Cont'd)

(B) Meet Point Billing (Cont'd)

(3) Determination of Meet Point Billed Local Transport and Channel Mileage Charges

Each Telephone Company's portion of the Local Transport and Channel Mileage will be developed as follows:

(a) Determine the appropriate Local Transport or Channel Mileage by computing the number of airline miles between the Telephone Company premises (end office, access tandem or serving wire centers for Switched Access or serving wire centers for Special Access) using the V&H method set forth respectively in 6.4.6 and 7.2.5 following.

(b) Determine the billing percentage (BP), as set forth in National Exchange Carrier Association, Inc. Tariff F.C.C. No. 4, which represents the portion of the service provided by each Telephone Company.

(c) For Feature Groups A, B, C and D Tandem Switched Transport

- multiply the number of originating and terminating access minutes of use routed over the facility times the number of airline miles, as set forth in (a) preceding, times the BP for each Telephone Company, as set forth in (b) preceding, times the Tandem Switched Facility or Local Transport Facility rate;

- multiply the Tandem Switched Termination rate times the number of originating and terminating access minutes routed over the facility.

- When a tandem office is located within the operating territory of a Telephone Company participating in this tariff, multiply the Tandem Switching rate times the number of originating and terminating access minutes that are switched at the tandem.

The Tandem Switched Termination rate is applied as set forth in 6.1.3(A) following. The Switched Access Nonrecurring Charges are applied as set forth in 6.4.1(B) following. (Note: The BP is not applied to the Switched Access Tandem Switched Termination rate or any Nonrecurring Charge.)

2. General Regulations (Cont'd)

2.4 Payment Arrangements and Credit Allowances (Cont'd)

2.4.7 Access Services Provided by More Than One Telephone Company (Cont'd)

(B) Meet Point Billing (Cont'd)

(3) Determination of Meet Point Billed Local Transport and Channel Mileage Charges (Cont'd)

(d) For Feature Groups A, B, C, and D Direct Trunked Transport:

- multiply the number of airline miles, as set forth in (a) preceding, times the BP for each Telephone Company, as set forth in (b) preceding, times the Direct Trunked Facility rate.

- The Direct Trunked Termination rate is applied as set forth in 6.1.3(A) following. The Switched Access Nonrecurring Charges are applied as set forth in 6.4.1(B) following. (Note: The BP is not applied to either the Switched Access Direct Trunked Termination rate or any Nonrecurring Charge.)

(e) For Feature Groups A, B, C, and D.

- When the end office (which may be a Remote Switching Module or WATS Serving Office) is located within the operating territory of a Telephone Company participating in this Tariff, if applicable multiply the Residual Interconnection Charge rate times the number of originating and terminating access minutes that are switched at the end office.

- When the Entrance Facility and/or Multiplexing equipment is located within the operating territory of a Telephone Company participating in this Tariff, the Entrance Facility and/or Multiplexing charge will apply.

- The Billing Percentage (BP) is not applicable to the Residual Interconnection charge, Entrance Facility or Multiplexer.

(f) For Special Access, multiply the number of airline miles, as set forth in (a) preceding, times the BP for each Telephone Company, as set forth in (b) preceding, times the Channel Mileage Facility rate and add the Channel Mileage Termination rate.

The Special Access Channel Mileage Termination rate and nonrecurring charges are applied as set forth in 7.2.1(B)(2) and 7.2.2(C) following. (Note: The BP is not applied to either the Channel Mileage Termination Recurring Rate or any Nonrecurring Charge.)

2. General Regulations (Cont'd)

2.4 Payment Arrangements and Credit Allowances (Cont'd)

2.4.7 Access Services Provided by More Than One Telephone Company (Cont'd)

(B) Meet Point Billing (Cont'd)

(3) Determination of Meet Point Billed Local Transport and Channel Mileage Charges (Cont'd)

(g) When three or more Telephone Companies are involved in providing an Access Service, the intermediate Telephone Company(s) will determine the charges as set forth in (c) through (f) preceding. Additionally, when a segment of the Tandem Switched Facility, Direct Trunked Facility or Channel Mileage Facility is measured to the intermediate office(s), the Tandem Switched Termination, Direct Trunked Termination or Channel Mileage Termination rates are also applied at the intermediate Telephone Company(s) office(s).

(h) Example - Switched Access

Layout

- Feature Group D Switched Access is ordered to End Office A.
- End Office A is in the operating territory of a Telephone Company (TC-A) participating in this Tariff.
- Customer designated premises is in the operating territory of a Telephone Company (TC-B) not participating in this Tariff.

2. General Regulations (Cont'd)

2.4 Payment Arrangements and Credit Allowances (Cont'd)

2.4.7 Access Services Provided by More Than One Telephone Company (Cont'd)

(B) Meet Point Billing (Cont'd)

(3) Determination of Meet Point Billed Local Transport and Channel Mileage Charges (Cont'd)

(h) Example - Switched Access (Cont'd)

The following example reflects the rate calculations for TC-A, a Telephone Company participating in this Tariff.

- Assume:

Airline miles (ALM) TC A premises to TC B Tandem = 22.1, rounded = 23.

Billing Percentage (BP)

TC A = 80%
TC B = 20%

Access Minutes (AM) = 9000

Tandem Switched Facility Rate = TSF

Tandem Switched Termination Rate = TST

Tandem Switching Rate = TS

Residual Interconnection Charge = RIC

Carrier Common Line Charge = CCL

End Office Charges = EO

- Telephone Company A charges are:

Tandem Switched Facility charge = 9,000 min. x 23 mi. x 80% x TSF rate
Tandem Switched Termination charge = 9,000 min. x TST rate

Residual Interconnection Charge = 9,000 min. x RIC rate
Carrier Common Line charge = 9,000 min. x CCL rate
End Office Charges = 9,000 min. x EO rates

2. General Regulations (Cont'd)

2.5 Connections

Equipment and Systems (i.e., terminal equipment, multiline terminating systems and communications systems) may be connected with Switched, Digital Subscriber Line, Special and Public Packet Data Network Access Service furnished by the Telephone Company where such connection is made in accordance with the provisions specified in Technical Reference Publication AS No. 1 and in 2.1 preceding.

2. General Regulations (Cont'd)

2.6 Definitions

Certain terms used herein are defined as follows:

800 Data Base Access Service

The term “800 Data Base Access Service” denotes a service which uses a data base system to identify 800 access customers on a 10-digit basis. For purposes of administering the rules and regulations set forth in this tariff regarding the provision of 800 Database Access, except where otherwise specified, 800 Database Access Service shall include the following service access codes 800, 888, 877, 866, 855, 844, 833, and 822.

800 Series

The term 800 series denotes the service access codes of 800, 888, 877, 866, 855, 844, 833, and 822.

Access Code

The term "Access Code", with the exception of Feature Group B (FGB) with an Abbreviated Dial Arrangement (ADA), denotes a uniform access code assigned by the Telephone Company to an individual customer in the form 10XXX or 101XXXX and 950-XXXX. Access codes for FGB with an ADA are explained in 6.9.2 following.

Access Minutes

For the purpose of calculating chargeable usage, the term "Access Minutes" denotes customer usage of exchange facilities in the provision of interstate or foreign service. On the originating end of an interstate or foreign call, usage is measured from the time the originating end user's call is delivered by the Telephone Company to and acknowledged as received by the customer's facilities connected with the originating exchange. On the terminating end of an interstate or foreign call, usage is measured from the time the call is received by the end user in the terminating exchange. Timing of usage at both originating and terminating ends of an interstate or foreign call shall terminate when the calling or called party disconnects, whichever event is recognized first in the originating and terminating exchanges, as applicable.

Access Tandem

The term "Access Tandem" denotes a Telephone Company or centralized equal access provider switching system that provides a concentration and distribution function for originating or terminating traffic between end offices and a customer designated premises.

2. General Regulations (Cont'd)

2.6 Definitions (Cont'd)

Add/Drop Multiplexing

The term “Add/Drop Multiplexing” denotes a multiplexing function offered in connection with SONET that allows lower level signals to be added or dropped from a high speed optical carrier channel in a wire center. The connection to the add/drop multiplexer is via a channel to a Central Office Port at a specific digital speed (i.e., DS3, DS1, etc.).

Answer/Disconnect Supervision

The term "Answer/Disconnect Supervision" denotes the transmission of the switch trunk equipment supervisory signal (off-hook or on-hook) to the customer's point of termination as an indication that the called party has answered or disconnected.

Asymmetric Digital Subscriber Line (ADSL)

The term “Asymmetric Digital Subscriber Line (ADSL)” denotes an access technology that allows voice and high speed data to be sent simultaneously over local exchange service facilities. ADSL supports data rates of up to 1.544 Mbps when receiving data (downstream rate) and up to 512 kbps when sending data (upstream rate).

Asynchronous Transfer Mode (ATM)

The term "Asynchronous Transfer Mode (ATM)" denotes a high speed networking technology that utilizes fixed-length cells. ATM is connection-oriented and provides traffic routing prioritization parameters which enable different types of traffic such as voice, data and video to be carried over the same network.

Attenuation Distortion

The term "Attenuation Distortion" denotes the difference in loss at specified frequencies relative to the loss at 1004 Hz, unless otherwise specified.

Balance (100 Type) Test Line

The term "Balance (100 Type) Test Line" denotes an arrangement in an end office which provides for balance and noise testing.

Bit

The term "Bit" denotes the smallest unit of information in the binary system of notation.

Business Day

The term "Business Day" denotes the times of day that a company is open for business. Generally, in the business community, these are 8:00 or 9:00 a.m. to 5:00 or 6:00 p.m., respectively, with an hour for lunch, Monday through Friday, resulting in a standard forty (40) hour work week. However, Business Day hours for the Telephone Company may vary based on company policy, union contract and location.

2. General Regulations (Cont'd)

2.6 Definitions (Cont'd)

Busy Hour Minutes of Capacity (BHMC)

The term "Busy Hour Minutes of Capacity (BHMC)" denotes the customer specified maximum amount of Switched Access Service and/or Directory Assistance Service access minutes the customer expects to be handled in an end office switch during any hour in an 8:00 a.m. to 11:00 p.m. period for the Feature Group and/or Directory Assistance Service ordered. This customer specified BHMC quantity is the input data the Telephone Company uses to determine the number of transmission paths for the Feature Group and/or Directory Assistance Service ordered.

Call

The term "Call" denotes a customer attempt for which complete address information (e.g., 0-, 911, or 10 digits) is provided to the serving dial tone office.

Carrier or Common Carrier

See Interexchange Carrier.

CCS

The term "CCS" denotes a hundred call seconds, which is a standard unit of traffic load that is equal to 100 seconds of usage or capacity of a group of servers (e.g., trunks).

Cell

The term "Cell" denotes the fixed-length packet used to carry data across an Asynchronous Transfer Mode (ATM) network. A "Cell" consists of 53 bytes, five of which carry header information.

Central Office

See End Office.

2. General Regulations (Cont'd)

2.6 Definitions (Cont'd)

Central Office Maintenance Technician

The term "Central Office Maintenance Technician" denotes a Telephone Company employee who performs installation and/or repair work, including testing and trouble isolation, within the Telephone Company Central Office.

Central Office Prefix

The term "Central Office Prefix" denotes the first three digits (NXX) of the seven digit telephone number assigned to a customer's Telephone Exchange Service when dialed on a local basis.

Channel(s)

The term "Channel(s)" denotes an electrical or photonic, in the case of fiber optic-based transmission systems, communications path between two or more points of termination.

Channel Service Unit

The term "Channel Service Unit" denotes equipment which performs one or more of the following functions: termination of a digital facility, regeneration of digital signals, detection and/or correction of signal format error, and remote loop back.

Channelize

The term "Channelize" denotes the process of multiplexing- demultiplexing wider bandwidth or higher speed channels into narrower bandwidth or lower speed channels.

Clear Channel Capability

The term "Clear Channel Capability" denotes the ability to transport twenty-four 64 Kbps over a DS1 Mbps High Capacity service via a B8ZS line code format.

C-Message Noise

The term "C-Message Noise" denotes the frequency weighted average noise within an idle voice channel. The frequency weighting, called C-message, is used to simulate the frequency characteristic of the 500-type telephone set and the hearing of the average subscriber.

2. General Regulations (Cont'd)

2.6 Definitions (Cont'd)

C-Notched Noise

The term "C-Notched Noise" denotes the C-message frequency weighted noise on a voice channel with a holding tone, which is removed at the measuring end through a notch (very narrow band) filter.

Committed Information Rate

The term “Committed Information Rate” denotes the transmission speed specified by the customer at which the Frame Relay Access Service network commits to transfer data between two ports.

Common Channel Signaling

The term "Common Channel Signaling" (CCS) denotes a high speed packet switched communications network which is separate (out of band) from the public packet switched and message networks. Its purpose is to carry addressed signaling messages for individual trunk circuits and/or database related services between Signaling Points in the CCS network.

Common Line

The term "Common Line" denotes a line, trunk, pay telephone line or other facility provided under the general and/or local exchange service tariffs of the Telephone Company, terminated on a central office switch. A common line-residence is a line or trunk provided under the residence regulations of the general and/or local exchange service tariffs. A common line-business is a line provided under the business regulations of the general and/or local exchange service tariffs.

Communications System

The term "Communications System" denotes channels and other facilities which are capable of communications between terminal equipment provided by other than the Telephone Company.

Customer(s)

The term "Customer(s)" denotes any individual, partnership, association, joint-stock company, trust, corporation, or governmental entity or other entity which subscribes to the services offered under this tariff, including both Interexchange Carriers (ICs) and End Users.

2. General Regulations (Cont'd)

2.6 Definitions (Cont'd)

Customer Designated Premises

The term "Customer Designated Premises" denotes the premises specified by the customer for the provision of Access Service.

Customer Node

The term “Customer Node” denotes the equipment located at a customer designated premises that terminates a high speed optical channel and converts the signal from an optical to an electrical format. Each electrical signal requires a discrete Customer Premises Port connection (i.e., DS1, DS3, STS-1) that allows for the provision of lower level digital signals.

Data Transmission (107 Type) Test Line

The term "Data Transmission (107 Type) Test Line" denotes an arrangement which provides for a connection to a signal source which provides test signals for one-way testing of data and voice transmission parameters.

Decibel

The term "Decibel" denotes a unit used to express relative difference in power, usually between acoustic or electric signals, equal to ten (10) times the common logarithm of the ratio of two signal powers.

Decibel Reference Noise C-Message Weighting

The term "Decibel Reference Noise C-Message Weighting" denotes noise power measurements with C-Message Weighting in decibels relative to a reference 1000 Hz tone of 90 dB below 1 milliwatt.

Decibel Reference Noise C-Message Referenced to 0

The term "Decibel Reference Noise C-Message Referenced to 0" denotes noise power in "Decibel Reference Noise C-Message Weighting" referred to or measured at a zero transmission level point.

Detail Billing

The term "Detail Billing" denotes the listing of each message and/or rate element for which charges to a customer are due on a bill prepared by the Telephone Company.

Digital Subscriber Line (DSL)

The term “Digital Subscriber Line (DSL)” denotes an access technology that allows simultaneous voice and high speed data to be sent over local exchange service facilities.

Digital Switched 56 Service

A switched access optional feature available with Feature Group C and Feature Group D Access, which provides for data transmission at up to 56 kilobits per second.

2. General Regulations (Cont'd)

2.6 Definitions (Cont'd)

Direct-Trunked Transport

The term "Direct-Trunked Transport" denotes transport from the serving wire center to the end office or from the serving wire center to the access tandem on circuits dedicated to the use of a single customer.

Dual Tone Multifrequency Address Signaling

The term "Dual Tone Multifrequency Address Signaling" denotes a type of signaling that is an optional feature of Switched Access Feature Group A. It may be utilized when Feature Group A is being used in the terminating direction (from the point of termination with the customer to the local exchange end office). An office arranged for Dual Tone Multifrequency Signaling would expect to receive address signals from the customer in the form of Dual Tone Multifrequency signals.

Echo Control

The term "Echo Control" denotes the control of reflected signals in a telephone transmission path.

Echo Path Loss

The term "Echo Path Loss" denotes the measure of reflected signal at a 4-wire point of interface without regard to the send and receive Transmission Level Point.

Echo Return Loss

The term "Echo Return Loss" denotes a frequency weighted measure of return loss over the middle of the voiceband (approximately 500 to 2500 Hz), where talker echo is most annoying.

2. General Regulations (Cont'd)

2.6 Definitions (Cont'd)

Effective 2-Wire

The term "Effective 2-Wire" denotes a condition which permits the simultaneous transmission in both directions over a channel, but it is not possible to insure independent information transmission in both directions. Effective 2-wire channels may be terminated with 2-wire or 4-wire interfaces.

Effective 4-Wire

The term "Effective 4-Wire" denotes a condition which permits the simultaneous independent transmission of information in both directions over a channel. The method of implementing effective 4- wire transmission is at the discretion of the Telephone Company (physical, time domain, frequency-domain separation or echo cancellation techniques). Effective 4-wire channels may be terminated with a 2-wire interface at the customer's premises. However, when terminated 2-wire, simultaneous independent transmission cannot be supported because the two wire interface combines the transmission paths into a single path.

End Office

The term "End Office" denotes a local Telephone Company switching system where Telephone Exchange Service customer station loops are terminated for purposes of interconnection to each other and to trunks. This term includes Remote Switching Modules/Systems served by a Host Central Office in a different wire center.

End User

The term "End User" means any customer of an interstate or foreign telecommunications service that is not a carrier, except that a carrier other than a telephone company shall be deemed to be an "end user" when such carrier uses a telecommunications service for administrative purposes, and a person or entity that offers telecommunications service exclusively as a reseller shall be deemed to be an "end user" if all resale transmissions offered by such reseller originate on the premises of such reseller.

2. General Regulations (Cont'd)

2.6 Definitions (Cont'd)

Enhanced Service

The term "Enhanced Service", as defined in Part 64 of the F.C.C.'s Rules and Regulations, are services "...offered over common carrier transmission facilities used in interstate communications, which employ computer processing applications that act on the format, content, code, protocol or similar aspects of the subscriber's transmitted information; provide the subscriber additional, different, or restructured information; or involve subscriber interaction with stored information."

Entrance Facility

The term "Entrance Facility" denotes a Switched Access Service dedicated Local Transport facility between the customer's serving wire center and the customer designated premises.

Entry Switch

See First Point of Switching.

Envelope Delay Distortion

The term "Envelope Delay Distortion" denotes a measure of the linearity of the phase versus frequency of a channel.

Equal Level Echo Path Loss

The term "Equal Level Echo Path Loss" (ELEPL) denotes the measure of Echo Path Loss (EPL) at a 4-wire interface which is corrected by the difference between the send and receive Transmission Level Point (TLP). [ELEPL = EPL - TLP (send) + TLP (receive)].

2. General Regulations (Cont'd)

2.6 Definitions (Cont'd)

Exchange

The term "Exchange" denotes a unit generally smaller than a local access and transport area, established by the Telephone Company for the administration of communications service in a specified area which usually embraces a city, town or village and its environs. It consists of one or more central offices together with the associated facilities used in furnishing communications service within that area. The exchange includes any Extended Area Service area that is an enlargement of a Telephone Company's exchange area to include nearby exchanges. One or more designated exchanges comprise a given local access and transport area.

Exit Message

The term "Exit Message" denotes an SS7 message sent to an end office by the Telephone Company's tandem switch to mark the Carrier Connect Time when the Telephone Company's tandem switch sends an Initial Address Message to an interexchange customer.

2. General Regulations (Cont'd)

2.6 Definitions (Cont'd)

Expected Measured Loss

The term "Expected Measured Loss" denotes a calculated loss which specifies the end-to-end 1004-Hz loss on a terminated test connection between two readily accessible manual or remote test points. It is the sum of the inserted connection loss and test access loss including any test pads.

Extended Area Service

See Exchange.

Extended PVC

The term “Extended PVC” denotes the interconnection of a port on the Telephone Company’s frame relay switch with a port on another interconnected telephone company’s frame relay switch.

First Point of Switching

The term "First Point of Switching" denotes the first Telephone Company or centralized equal access provider location at which switching occurs on the terminating path of a call proceeding from the customer designated premises to the terminating end office and, at the same time, the last Telephone Company or centralized equal access provider location at which switching occurs on the originating path of a call proceeding from the originating end office to the customer designated premises.

Frame

The term “Frame” denotes a group of data bits in a specific format, which enables network equipment to recognize the meaning and purpose of the specific bits.

Frame Relay Access Customer Port

The term “Frame Relay Access Customer Port” denotes the physical location in the telephone company switching offices where the access customer’s special access facility connects to the telephone company’s Frame Relay Access Service network. It specifies how a frame relay switch sends and receives data from a frame relay access customer’s network.

2. General Regulations (Cont'd)

2.6 Definitions (Cont'd)

Frame Relay Access Service

The term “Frame Relay Access Service” denotes a medium-speed, connection-oriented packet-switched data service that allows for the interconnection of Local Area Networks or other compatible end user customer premises equipment for the purpose of connecting to an access customer’s interstate network.

Frame Relay End User Port

The term “Frame Relay End User Port” denotes the physical location in the telephone company switching office where the special access facility of the customer connects to the Frame Relay Access Service Network. It receives the data frame from the end user customer’s Local Area Network or other compatible CPE devices and verifies that the end user connection and the corresponding access customer connection are valid before relaying the frame to the destination end point.

Frequency Shift

The term "Frequency Shift" denotes the change in the frequency of a tone as it is transmitted over a channel.

Grandfathered

The term "Grandfathered" denotes Terminal Equipment, Multiline Terminating Systems and Protective Circuitry directly connected to the facilities utilized to provide services under the provisions of this tariff, and which are considered grandfathered under Part 68 of the F.C.C.'s Rules and Regulations.

Host Central Office

The term "Host Central Office" denotes an electronic local Telephone Company End Office where Telephone Exchange Service customer station loops are terminated for purposes of interconnection to each other and to trunks. Additionally, this type of End Office contains the central call processing functions which service itself and its Remote Switching Modules/Systems.

Hub

The term "Hub" denotes a wire center at which bridging or multiplexing functions are performed for customers served out of any wire center.

2. General Regulations (Cont'd)

2.6 Definitions (Cont'd)

Immediately Available Funds

The term "Immediately Available Funds" denotes a corporate or personal check drawn on a bank account and funds which are available for use by the receiving party on the same day on which they are received and include U.S. Federal Reserve bank wire transfers, U.S. Federal Reserve notes (paper cash), U.S. coins, U.S. Postal Money Orders and New York Certificates of Deposit.

Impedance Balance

The term "Impedance Balance" denotes the method of expressing Echo Return Loss and Singing Return Loss at a 4-wire interface whereby the gains and/or loss of the 4-wire portion of the transmission path, including the hybrid, are not included in the specification.

Impulse Noise

The term "Impulse Noise" denotes any momentary occurrence of the noise on a channel over a specified level threshold. It is evaluated by counting the number of occurrences which exceed the threshold.

Individual Case Basis

The term "Individual Case Basis" denotes a condition in which the regulations, if applicable, rates and charges for an offering under the provisions of this tariff are developed based on the circumstances in each case.

Initial Address Message

The term "Initial Address Message" denotes an SS7 message sent in the forward direction to initiate trunk set up, reserve an outgoing trunk and process the information about that trunk along with other data relating to the routing and handling of the call to the next switch.

Inserted Connection Loss

The term "Inserted Connection Loss" denotes the 1004 Hz power difference (in dB) between the maximum power available at the originating end and the actual power reaching the terminating end through the inserted connection.

2. General Regulations (Cont'd)

2.6 Definitions (Cont'd)

Installation and Repair Technician

The term "Installation and Repair Technician" denotes a Telephone Company employee who performs installation and/or repair work, including testing and trouble isolation, outside of the Telephone Company Central Office and generally at the customer designated premises.

Interexchange Carrier (IC) or Interexchange Common Carrier

The terms "Interexchange Carrier" (IC) or "Interexchange Common Carrier" denotes any individual, partnership, association, joint- stock company, trust, governmental entity or corporation engaged for hire in interstate or foreign communication by wire or radio, between two or more exchanges.

Intermediate Hub

The term "Intermediate Hub" denotes a wire center at which bridging or multiplexing functions are performed only for customers served by that wire center and wire centers that subtend the hub, as specified in National Exchange Carrier Association, Inc. Tariff F.C.C. No. 4.

Intermodulation Distortion

The term "Intermodulation Distortion" denotes a measure of the nonlinearity of a channel. It is measured using four tones, and evaluating the ratios (in dB) of the transmitted composite four-tone signal power to the second-order products of the tones (R2), and the third-order products of the tones (R3).

Interstate Communications

The term "Interstate Communications" denotes both interstate and foreign communications.

Intrastate Communications

The term "Intrastate Communications" denotes any communications within a state subject to oversight by a state regulatory commission as provided by the laws of the state involved.

2. General Regulations (Cont'd)

2.6 Definitions (Cont'd)

Legal Holiday

The term "Legal Holiday" denotes days other than Saturday or Sunday for which the Telephone Company is normally closed. These include New Year's Day, Independence Day, Thanksgiving Day, Christmas Day and a day when Washington's Birthday, Memorial Day or Columbus Day is legally observed and other locally observed holidays when the Telephone Company is closed.

Line Side Connection

The term "Line Side Connection" denotes a connection of a transmission path to the line side of a local exchange switching system.

Local Access and Transport Area (LATA)

The term "Local Access and Transport Area" denotes a geographic area established for the provision and administration of communications service. It encompasses one or more designated exchanges, which are grouped to serve common social, economic and other purposes.

Local Area Network

The term “Local Area Network” denotes a network permitting the interconnection and intercommunication of a group of computers.

Loss Deviation

The term "Loss Deviation" denotes the variation of the actual loss from the designed value.

Major Fraction Thereof

The term "Major Fraction Thereof" denotes any period of time in excess of 1/2 of the stated amount of time. As an example, in considering a period of 24 hours, a major fraction thereof would be any period of time in excess of 12 hours exactly. Therefore, if a given service is interrupted for a period of thirty-six hours and fifteen minutes, the customer would be given a credit allowance for two twenty-four hour periods for a total of forty-eight hours.

Message

The term "Message" denotes a "call" as defined preceding.

2. General Regulations (Cont'd)

2.6 Definitions (Cont'd)

Milliwatt (102 Type) Test Line

The term "Milliwatt (102 Type) Test Line" denotes an arrangement in an end office which provides a 1004 Hz tone at 0 dBm0 for one-way transmission measurements towards the customer's premises from the Telephone Company end office.

Network Control Signaling

The term "Network Control Signaling" denotes the transmission of signals used in the telecommunications system which perform functions such as supervision (control, status, and charge signals), address signaling (e.g., dialing), calling and called number identifications, rate of flow, service selection error control and audible tone signals (call progress signals indicating re-order or busy conditions, alerting, coin denominations, coin collect and coin return tones) to control the operation of the telecommunications system.

Nonsynchronous Test Line

The term "Nonsynchronous Test Line" denotes an arrangement in step- by-step end offices which provides operational tests which are not as complete as those provided by the synchronous test lines, but can be made more rapidly.

North American Numbering Plan

The term "North American Numbering Plan" denotes a three-digit area code (Numbering Plan Area - NPA) and a seven-digit telephone number made up of a three-digit Central Office prefix plus a four-digit station number.

Off-hook

The term "Off-hook" denotes the active condition of Switched Access or a Telephone Exchange Service line.

2. General Regulations (Cont'd)

2.6 Definitions (Cont'd)

On-hook

The term "On-hook" denotes the idle condition of Switched Access or a Telephone Exchange Service line.

Open Circuit Test Line

The term "Open Circuit Test Line" denotes an arrangement in an end office which provides an ac open circuit termination of a trunk or line by means of an inductor of several Henries.

Optical Carrier Channel

The term “Optical Carrier Channel” denotes the high speed optical communication path for transporting information utilizing a Synchronous Optical Channel Platform. The channel is provided at transmission rates of 155.52 Mbps (OC3), 622.08 Mbps (OC12), and 2.4 Gbts (OC 48).

Optical Carrier Rate (OC-N)

The term “Optical Carrier Rate” denotes the line rate being transmitted on an optical carrier channel. A SONET transmission rate is equivalent to “N” times the OC1 line rate of 51.84 Mbps.

Optical Line Termination

The term “Optical Line Termination” denotes the network interface on the customer designated premises equipment that provides the optical handoff.

Originating Direction

The term "Originating Direction" denotes the use of access service for the origination of calls from an End User Premises to an IC Premises.

Pay Telephone

The term "Pay Telephone" denotes a coin or coin less instrument provided in a public or semipublic place where Payphone Service Provider customers can originate telephonic communications and pay the applicable charges by (1) inserting coins into the equipment, or (2) using a credit card, or (3) third party billing the call or (4) calling collect.

Payphone Service Provider

The term “Payphone Service Provider” denotes an entity that provides pay telephone service, which is the provision of public, semi-public or inmate pay telephone service.

2. General Regulations (Cont'd)

2.6 Definitions (Cont'd)

Permanent Virtual Connection (PVC)

The term “PVC” denotes a software defined communications path between two port connections within the Frame Relay Access Service network.

Phase Jitter

The term "Phase Jitter" denotes the unwanted phase variations of a signal.

Point of Termination

The term "Point of Termination" denotes the point of demarcation within a customer-designated premises at which the Telephone Company's responsibility for the provision of Access Service ends.

Premises

The term "Premises" denotes a building or buildings on continuous property (except Railroad Right-of-Way, etc.) not separated by a public highway.

Release Message

The term "Release Message" denotes an SS7 message sent in either direction to indicate that a specific circuit is being released.

Remote Switching Modules/Systems

The term "Remote Switching Modules/Systems" denotes small, remotely controlled electronic end office switches which obtain their call processing capability from an electronic Host Central Office. The Remote Switching Modules/Systems cannot accommodate direct trunks to an IC.

Return Loss

The term "Return Loss" denotes a measure of the similarity between the two impedances at the junction of two transmission paths. The higher the return loss, the higher the similarity.

Registered Equipment

The term "Registered Equipment" denotes the customer's premises equipment which complies with and has been approved within the Registration Provisions of Part 68 of the F.C.C.'s Rules and Regulations.

2. General Regulations (Cont'd)

2.6 Definitions (Cont'd)

Service Access Code

The term "Service Access Code" denotes a 3 digit code in the NPA format which is used as the first three digits of a 10 digit address and which is assigned for special network uses. Whereas NPA codes are normally used for identifying specific geographical areas, certain Service Access Codes have been allocated in the North American Numbering Plan to identify generic services or to provide access capability. Examples of Service Access Codes include the 800 and 900 codes.

Service Switching Point (SSP)

The term "Service Switching Point" denotes an end office or tandem which, in addition to having SS7 and SP capabilities, is also equipped to query centralized data bases.

Serving Wire Center

The term "Serving Wire Center" denotes the wire center from which the customer designated premises would normally obtain dial tone from the Telephone Company.

Seven Digit Manual Test Line

The term "Seven Digit Manual Test Line" denotes an arrangement which allows the Customer to select balance, milliwatt and synchronous test lines by manually dialing a seven digit number over the associated access connection.

Shortage of Facilities or Equipment

The term "Shortage of Facilities or Equipment" denotes a condition which occurs when the Telephone Company does not have appropriate cable, switching capacity, bridging or, multiplexing equipment, etc., necessary to provide the Access Service requested by the customer.

2. General Regulations (Cont'd)

2.6 Definitions (Cont'd)

Short Circuit Test Line

The term "Short Circuit Test Line" denotes an arrangement in an end office which provides for an ac short circuit termination of a trunk or line by means of a capacitor of at least four microfarads.

Signal-to-C-Notched Noise Ratio

The term "Signal-to-C-Notched Noise Ratio" denotes the ratio in dB of a test signal to the corresponding C-Notched Noise.

Signaling Point (SP)

The term "Signaling Point (SP)" denotes an SS7 network interface element capable of originating and terminating SS7 trunk signaling messages.

Signaling Point of Interface (SPOI)

The term "Signaling Point of Interface (SPOI)" denotes the customer designated location where the SS7 signaling information is exchanged between the Telephone Company and the customer.

Signaling Return Loss

The term "Signaling Return Loss" denotes the frequency weighted measure of return loss at the edges of the voiceband (200 to 500 Hz and 2500 to 3200 Hz), where signing (instability) problems are most likely to occur.

Signaling System 7 (SS7)

The term "Signaling System 7 (SS7)" denotes the layered protocol used for standardized common channel signaling in the United States and Puerto Rico.

Signal Transfer Point (STP)

The term "Signal Transfer Point (STP)" denotes a packet switch which provides access to the Telephone Company's SS7 network and performs SS7 message signal routing and screening.

Signal Transfer Point (STP) Port

The term "Signal Transfer Point (STP) Port" denotes the point of termination and interconnection to the STP.

2. General Regulations (Cont'd)

2.6 Definitions (Cont'd)

Standard PVC

The term “Standard PVC” denotes the interconnection of ports on the same frame relay switch.

Subtending End Office of an Access Tandem

The term "Subtending End Office of an Access Tandem" denotes an end office that has final trunk group routing through that tandem.

Super Intermediate Hub

The term "Super Intermediate Hub" denotes a wire center at which bridging or multiplexing functions are performed for Customers served by all wire centers in the LATA. A Super Intermediate Hub can be restricted to one or more designated NPAs within a LATA and/or to wire centers that are owned by the same telephone company as the hub. Super Intermediate Hubs and the wire centers they serve are identified in National Exchange Carrier Association, Inc. Tariff F.C.C. No. 4.

Synchronous Optical Network (SONET)

The term “SONET” denotes a North American Standard for high speed synchronous optical channels having minimum transmission rates of 51.84 Mbps. The standard SONET optical carrier rate of 51.84 Mbps is called OC1; the equivalent electrical signal rate is called STS-1. SONET standardizes higher transmission bit rates, “OCN”, as exact multiples of OC1 (N x 51.84 Mbps). For example, OC3 equals 3 x 51.84 Mbps.

Synchronous Test Line

The term "Synchronous Test Line" denotes an arrangement in an end office which performs marginal operational tests of supervisory and ring-tripping functions.

Synchronous Transport Signal

The term “Synchronous Transport Signal” denotes 51.84 Mbps electrical signal used within the SONET optical carrier network. The signal consists of the information content and the overhead used by SONET. The overhead is used for controlling, framing and maintaining the STS signal so it can be directly connected to other SONET carrier channels. STS signals are in exact multiples of 51.84 Mbps (STS-1 is 51.84 Mbps, STS-3 is 155.52 Mbps, etc.).

Tandem Switched Transport

The term "Tandem Switched Transport" denotes transport from the tandem to the end office, that is switched at a tandem.

2. General Regulations (Cont'd)

2.6 Definitions (Cont'd)

Terminating Direction

The term "Terminating Direction" denotes the use of Access Service for the completion of calls from an IC premises to an End User Premises.

Terminus Hub

The term "Terminus Hub" denotes a wire center at which bridging or multiplexing functions are performed only for Customers served directly by the same wire center.

Throughput

The term “Throughput” denotes the number of data bits successfully transferred in one direction per unit of time.

Transmission Measuring (105 Type) Test Line/Responder

The term "Transmission Measuring (105 Type) Test Line/ Responder" denotes an arrangement in an end office which provides far-end access to a responder and permits two-way loss and noise measurements to be made on trunks from a near end office.

2. General Regulations (Cont'd)

2.6 Definitions (Cont'd)

Transmission Path

The term "Transmission Path" denotes an electrical path capable of transmitting signals within the range of the service offering, e.g., a voice grade transmission path is capable of transmitting voice frequencies within the approximate range of 300 to 3000 Hz. A transmission path is comprised of physical or derived facilities consisting of any form or configuration of plant typically used in the telecommunications industry.

Trunk

The term "Trunk" denotes a communications path connecting two switching systems in a network, used in the establishment of an end-to-end connection.

Trunk Group

The term "Trunk Group" denotes a set of trunks which are traffic engineered as a unit for the establishment of connections between switching systems in which all of the communications paths are interchangeable.

Trunk Side Connection

The term "Trunk Side Connection" denotes the connection of a transmission path to the trunk side of a local exchange switching system.

Two-Wire to Four-Wire Conversion

The term "Two-Wire to Four-Wire Conversion" denotes an arrangement which converts a four-wire transmission path to a two-wire transmission path to allow a four-wire facility to terminate in a two-wire entity (e.g., a central office switch).

2. General Regulations (Cont'd)

2.6 Definitions (Cont'd)

V and H Coordinates Method

The term "V and H Coordinates Method" denotes a method of computing airline miles between two points by utilizing an established formula which is based on the vertical and horizontal coordinates of the two points.

WATS Serving Office

The term "WATS Serving Office" denotes a Telephone Company designated serving wire center where switching, screening and/or recording functions are performed in connection with the closed-end of WATS or WATS-type services.

Wireless Switching Center

The term "Wireless Switching Center" (WSC) denotes a Wireless Service Provider (WSP) switching system that is used to terminate wireless stations for purposes of interconnection to each other and to trunks interfacing with the public switched network.

Wire Center

The term "Wire Center" denotes a building in which one or more central offices, used for the provision of Telephone Exchange Services, are located.

3. Carrier Common Line Access Service, Federal Universal Service Charge, ISDN Line Ports and DS1 Line Port

The Telephone Company will provide Carrier Common Line Access Service (Carrier Common Line Access) to customers in conjunction with Switched Access Service provided in Section 6 of this tariff or the appropriate Switched Access Service section of other Access Service tariffs.

3.1 General Description

Carrier Common Line Access provides for the use of end users' Telephone Company provided common lines by customers for access to such end users to furnish Interstate Communications.

Premium Access is (1) Switched Access Service provided to customers under this tariff which furnish interstate MTS/WATS, and (2) Switched Access Service in an end office converted to equal access.

Non-Premium Access is Switched Access Service provided in an end office not yet converted to equal access to customers that do not furnish interstate MTS/WATS.

A Special Access Surcharge, as set forth in 17.5.2 following, will apply to interstate special access service provided by the Telephone Company to a customer, in accordance with regulations as set forth in 7.3 following.

3. Carrier Common Line Access Service, Federal Universal Service Charge, ISDN Line Ports and DS1 Line Port (Cont'd)

3.2 Limitations

3.2.1 Exclusions

Neither a telephone number nor detail billing are provided with Carrier Common Line Access. Additionally, directory listings and intercept arrangements are not included in the rates and charges for Carrier Common Line Access.

3.2.2 Access Groups

All line side connections provided in the same access group will be limited to the same features and operating characteristics.

All trunk side connections provided in the same access group will be limited to the same features and operating characteristics.

3.2.3 WATS Access Lines

Where Switched Access Services are connected with Special Access Services at Telephone Company Designated WATS Serving Offices for the provision of WATS or WATS-type Services, Switched Access Service minutes which are carried on that end of the service (i.e., originating minutes for outward WATS and WATS-type services and terminating minutes for inward WATS and WATS-type services) shall not be assessed Carrier Common Line Access per minute charges with the following exception. Carrier Common Line Access per minute charges shall apply when Feature Group A or Feature Group B switched access is ordered from a non- equal access telephone company office that does not have measurement capabilities and the assumed average access minutes, as set forth in the exchange carrier's access tariff, are used.

3. Carrier Common Line Access Service, Federal Universal Service Charge, ISDN Line Ports and DS1 Line Port (Cont'd)

3.3 Undertaking of the Telephone Company

3.3.1 Provision of Service

Where the customer is provided Switched Access Service under other sections of this or other Access Service tariffs, the Telephone Company will provide the use of Telephone Company common lines by a customer for access to end users at rates and charges as set forth in 17.1.1 following.

3.3.2 Interstate and Intrastate Use

The Switched Access Service provided by the Telephone Company includes the Switched Access Service provided for both interstate and intrastate communications. The Carrier Common Line Access rates and charges as set forth in 17.1.1 following apply to interstate Switched Access Service access minutes in accordance with the rate regulations as set forth in 3.8.4 following (Percent Interstate Use - PIU).

3.4 Obligations of the Customer

3.4.1 Switched Access Service Requirement

The Switched Access Service associated with Carrier Common Line Access shall be ordered by the customer under other sections of this tariff.

3.4.2 Supervision

The customer facilities at the premises of the ordering customer shall provide the necessary on-hook and off-hook supervision.

3. Carrier Common Line Access Service, Federal Universal Service Charge, ISDN Line Ports and DS1 Line Port (Cont'd)

3.5 Determination of Usage Subject to Carrier Common Line Access Charges

Except as set forth herein, all Switched Access Service provided to the customer will be subject to Carrier Common Line Access charges.

3.5.1 Determination of Jurisdiction

When the customer reports interstate and intrastate use of Switched Access Service, the associated Carrier Common Line Access used by the customer for interstate will be determined as set forth in 3.8.4 following (Percent Interstate Use-PIU).

3.5.2 Cases Involving Usage Recording By the Customer

Where Feature Group C end office switching is provided without Telephone Company recording and the customer records minutes of use used to determine Carrier Common Line Access charges (i.e., Feature Group C operator and calls such as pay telephone sent-paid, operator-DDD, operator-person, collect, credit-card, third number and/or other like calls), the customer shall furnish such minutes of use detail to the Telephone Company in a timely manner. If the customer does not furnish the data, the customer shall identify all Switched Access Services which could carry such calls in order for the Telephone Company to accumulate the minutes of use through the use of special Telephone Company measuring and recording equipment.

3. Carrier Common Line Access Service, Federal Universal Service Charge, ISDN Line Ports and DS1 Line Port (Cont'd)

3.5 Determination of Usage Subject to Carrier Common Line Access Charges (Cont'd)

3.5.3 Local Exchange Access and Enhanced Services Exemption

When access to the local exchange is required to provide a customer service (e.g., MTS/WATS-type, telex, Data, etc.) that uses a resold Special Access service, Switched Access Service Rates and Regulations, as set forth in Section 6. following will apply, except when such access to the local exchange is required for the provision of an enhanced service. Carrier Common Line Access rates and charges as set forth in 17.1.1 following apply in accordance with the resale rate regulations as set forth in 3.6.4 following.

3.6 Resold Services

3.6.1 Scope

Where the customer is reselling MTS and/or MTS-type service(s) on which the Carrier Common Line and Switched Access charges have been assessed, the customer may, at the option of the customer, obtain Feature Group A, Feature Group B or Feature Group D Switched Access Service under this tariff as set forth in Section 6. following for originating and/or terminating access in the local exchange. Such access group arrangements whether single lines or trunks or multiline hunt groups or trunk groups will have Carrier Common Line Access charges applied as set forth in 17.1.1 following in accordance with the resale rate regulations set forth in 3.6.4 following. For purposes of administering this provision:

Resold interstate terminating MTS and MTS-type service(s) shall include collect calls, third number calls and credit card calls where the reseller pays the underlying carrier's service charges; and shall not include intrastate minutes of use.

Resold interstate originating MTS and MTS-type service(s) shall not include collect, third number, credit card or intrastate minutes of use.

3. Carrier Common Line Access Service, Federal Universal Service Charge, ISDN Line Ports and DS1 Line Port (Cont'd)

3.6 Resold Services (Cont'd)

3.6.2 Customer Obligations Concerning the Resale of MTS and MTS-type Services

When the customer is reselling MTS and/or MTS-type service as set forth in 3.6.1 preceding, the customer will be charged Carrier Common Line Access charges in accordance with the resale rate regulations as set forth in 3.6.4 following if the customer or the provider of the MTS service furnishes documentation of the MTS usage and/or the customer furnishes documentation of the MTS-type usage. Such documentation supplied by the customer shall be supplied each month and shall identify the involved resold MTS and/or MTS-type services.

The monthly period used to determine the minutes of use for resold MTS and/or MTS-type service(s) shall be the most recent monthly period for which the customer has received a bill for such resold service(s). This information shall be delivered to the Telephone Company, at a location specified by the Telephone Company, no later than 15 days after the bill date shown on the resold MTS and/or MTS-type service bill. If the required information is not received by the Telephone Company, the previously reported information, as described preceding, will be used for the next two months. For any subsequent month, no allocation or credit will be made until the required documentation is delivered to the Telephone Company by the customer.

3. Carrier Common Line Access Service, Federal Universal Service Charge, ISDN Line Ports and DS1 Line Port (Cont'd)

3.6 Resold Services (Cont'd)

3.6.3 Resale Documentation Provided By the Customer

When the customer utilizes Switched Access Service as set forth in 3.6.2 preceding, the Telephone Company may request a certified copy of the customer's resold MTS or MTS-type usage billing from either the customer or the provider of the MTS or MTS-type service. Requests for billing will relate back no more than 12 months prior to the current billing period.

3. Carrier Common Line Access Service, Federal Universal Service Charge, ISDN Line Ports and DS1 Line Port (Cont'd)

3.6 Resold Services (Cont'd)

3.6.4 Rate Regulations Concerning the Resale of MTS and MTS-type Services

When the customer is provided an access group to be used in conjunction with the resale of MTS and/or MTS-type services as set forth in 3.6.1 preceding, subject to the limitations as set forth in 3.2 preceding, and the billing entity receives the usage information required as set forth in 3.6.2 preceding, to calculate the adjustment of Carrier Common Line Access charges, the customer will be billed as set forth in (D), (E) or (F) following, depending upon, respectively, whether the usage is from non-equal access offices, equal access offices or a combination of the two.

(A) Apportionment and Adjustment of Resold Minutes of Use

When the customer is provided with more than one access group in a LATA in association with the resale of MTS and/or MTS-type services, the resold minutes of use will be apportioned as follows:

(1) Originating Services

The Telephone Company will apportion the resold originating MTS and/or MTS-type services and originating minutes of use for which the resale credit adjustment applies, among the access groups. Such apportionment will be based on the relationship of the originating usage for each access group to the total originating usage for all access groups in the LATA. For purposes of administering this provision:

3. Carrier Common Line Access Service, Federal Universal Service Charge, ISDN Line Ports and DS1 Line Port (Cont'd)

3.6 Resold Services (Cont'd)

3.6.4 Rate Regulations Concerning the Resale of MTS and MTS- type Services (Cont'd)

(A) Apportionment and Adjustment of Resold Minutes of Use (Cont'd)

(1) Originating Services (Cont'd)

Resold originating MTS and/or MTS-type services minutes shall be only those attributable to interstate originating MTS and/or MTS-type minutes and shall not include collect, third number, credit card or intrastate minutes of use.

The resale credit adjustment shall apply for resold originating MTS and MTS-type services and minutes of use, provided Carrier Common Line and Switched Access Charges have been assessed on such services.

(2) Terminating Services

The Telephone Company will apportion the resold terminating MTS and/or MTS-type services and terminating minutes of use for which the resale credit adjustment applies, among the access groups. Such apportionment will be based on the relationship of the terminating usage for each access group to the total terminating usage for all access groups in the LATA. For purposes of administering this provision:

> Resold terminating MTS and/or MTS-type services minutes shall be only those attributable to interstate terminating MTS/MTS-type (i.e., collect calls, third number calls, and credit card calls) and shall not include intrastate minutes of use or MTS/MTS-type minutes of use paid for by another party.

The resale credit adjustment shall apply for resold terminating MTS and MTS-type services and minutes of use, provided Carrier Common Line and Switched Access Charges have been assessed on such services.

3. Carrier Common Line Access Service, Federal Universal Service Charge, ISDN Line Ports and DS1 Line Port (Cont'd)

3.6 Resold Services (Cont'd)

3.6.4 Rate Regulations Concerning the Resale of MTS and MTS- type Services (Cont'd)

(B) Same State/Telephone Company/Exchange Limitation

In order for the rate regulations to apply as set forth in (D), (E) or (F) following, the access groups and the resold MTS and/or MTS-type services must be provided in the same state (except when the same extended area service arrangement is provided in two different states by the same telephone company) in the same exchange, provided by the same Telephone Company and connected directly or indirectly. For those exchanges that encompass more than one state, the customer shall report the information by state within the exchange.

3. Carrier Common Line Access Service, Federal Universal Service Charge, ISDN Line Ports and DS1 Line Port (Cont'd)

3.6 Resold Services (Cont'd)

3.6.4 Rate Regulations Concerning the Resale of MTS and MTS- type Services (Cont'd)

(C) Direct and Indirect Connections

Each of the access group arrangements used by the customer in association with the resold MTS and/or MTS-type services must be connected either directly or indirectly to the customer designated premises at which the resold MTS and/or MTS-type services are terminated. Direct connections are those arrangements where the access groups and resold MTS and/or MTS-type services are terminated at the same customer designated premises.

Indirect originating connections are those arrangements where the access groups and the resold originating MTS and/or MTS-type services are physically located at different customer designated premises in the same exchange. Such different customer designated premises are connected by facilities that permit a call to flow from access groups to resold MTS and/or MTS-type services.

Indirect terminating connections are those arrangements where the access groups and resold terminating MTS and/or MTS-type services are physically located at different customer designated premises in the same exchange. Such different customer designated premises are connected by facilities that permit a call to flow from resold terminating MTS and/or MTS-type services to access groups.

3. Carrier Common Line Access Service, Federal Universal Service Charge, ISDN Line Ports and DS1 Line Port (Cont'd)

3.6 Resold Services (Cont'd)

3.6.4 Rate Regulations Concerning the Resale of MTS and MTS- type Services (Cont'd)

(D) Access Groups - Non Equal Access Offices Only

The adjustments as set forth here and in (E) and (F) following will be computed separately for each access group.

When all the usage on an access group originates from and/or terminates at end offices that have not been converted to equal access, the Non Premium Access Charge per minute as set forth in 17.4.3 following will apply. The Access Minutes which will be subject to Carrier Common Line Access charges will be the adjusted originating interstate access minutes plus the adjusted terminating interstate access minutes for such access groups.

The adjusted originating access minutes will be the originating interstate access minutes less the reported resold originating MTS and/or MTS-type service minutes of use as set forth (A)(1) preceding; but not less than zero. The adjusted terminating access minutes will be the terminating interstate access minutes less the reported resold terminating MTS and/or MTS-type service minutes of use as set forth in (A)(2) preceding; but not less than zero.

3. Carrier Common Line Access Service, Federal Universal Service Charge, ISDN Line Ports and DS1 Line Port (Cont'd)

3.6 Resold Services (Cont'd)

3.6.4 Rate Regulations Concerning the Resale of MTS and MTS- type Services (Cont'd)

(E) Access Groups - Equal Access Offices Only

When all the usage on an access group originates from and/or terminates at end offices that have been converted to equal access, the Premium Access Charge per minute as set forth in 17.4.3 following will apply. The minutes billed Carrier Common Line Access Service charges will be the adjusted originating interstate access minutes and the adjusted terminating interstate access minutes for such access groups.

The adjusted originating access minutes will be the originating interstate access minutes less the reported resold originating MTS and/or MTS-type service minutes of use as set forth in (A)(1) preceding; but not less than zero. The adjusted terminating access minutes will be the terminating interstate access minutes less the reported resold terminating MTS and/or MTS-type service minutes of use as set forth in (A)(2) preceding; but not less than zero.

3. Carrier Common Line Access Service, Federal Universal Service Charge, ISDN Line Ports and DS1 Line Port (Cont'd)

3.6 Resold Services (Cont'd)

3.6.4 Rate Regulations for the Resale of MTS and MTS-type Services (Cont'd)

(F) Access Groups - Non-Equal Access and Equal Access Offices

When an access group has usage that originates from and/or terminates at both end offices that have been converted to equal access and end offices that have not been converted, both premium and non premium per minute charges as set forth in 17.4.3 following will apply respectively. The minutes billed Carrier Common Line Access Service charges will be the adjusted originating interstate access minutes plus the adjusted terminating interstate access minutes for such access groups.

The adjusted originating access minutes will be the originating interstate access minutes less the reported resold originating MTS and/or MTS-type service minutes of use as set forth in (A)(1) preceding; but not less than zero. The adjusted terminating access minutes will be the terminating interstate access minutes less the reported resold terminating MTS and/or MTS-type service minutes of use as set forth in (A)(2) preceding; but not less than zero.

The adjusted originating access minutes and the adjusted terminating access minutes will be apportioned between premium and non premium access minutes using end-office specific usage data when available, or when usage data are not available, the premium and non premium ratios developed as set forth in 6.4.1(C)(3) following. The Premium and Non Premium per minute charges set forth in 17.4.3, following will apply to the respective premium and non premium access minutes determined in this manner.

3. Carrier Common Line Access Service, Federal Universal Service Charge, ISDN Line Ports and DS1 Line Port (Cont'd)

3.6 Resold Services (Cont'd)

3.6.4 Rate Regulations Concerning the Resale of MTS and MTS-type Services (Cont'd)

(G) When the Adjustment Will Be Applied to Customer Bills

The adjustment as set forth in (D), (E) and (F) preceding will be made to the involved customer account no later than either the next bill date, or the one subsequent to that, depending on when the usage report is obtained.

(H) Conversion of Billed Usage to Minutes

When the MTS and/or MTS-type usage is shown in hours, the number of hours shall be multiplied by 60 to develop the associated MTS and/or MTS-type minutes of use. If the MTS and/or MTS-type usage is shown in a unit that does not show hours or minutes, the customer shall provide a factor to convert the shown units to minutes.

(I) Percent Interstate Use (PIU)

The adjustment as set forth in (D), (E) and (F) preceding will be made to the involved customer account after making the adjustments to the customer account as set forth in 3.8.4 following (PIU).

3.7 Reserved For Future Use

3. Carrier Common Line Access Service, Federal Universal Service Charge, ISDN Line Ports and DS1 Line Port (Cont'd)

3.8 Rate Regulations

3.8.1 Billing of Charges

Carrier Common Line charges will be billed to each Switched Access Service provided under this tariff in accordance with the regulations as set forth in 3.8.5 following (Determination of Premium and Non-Premium Charges) except as set forth in 3.6.4 preceding (Resale) and 3.8.4 following (PIU).

3.8.2 Measuring and Recording of Call Detail

When access minutes are used to determine Carrier Common Line charges, they will be accumulated using call detail recorded by Telephone Company equipment except as set forth in 3.8.3 following (Unmeasured FGA and B Usage) and Feature Group C operator and automated operator services systems call detail such as pay telephone sent-paid, operator-DDD, operator-person, collect, credit-card, third number and/or other like calls recorded by the customer. The Telephone Company measuring and recording equipment, except as set forth in 3.8.3 following (Unmeasured FGA and B Usage), will be associated with end office or local tandem switching equipment and will record each originating and terminating access minute where answer supervision is received. The accumulated access minutes will be summed on a line by line basis, by line group or by end office, whichever type of account is used by the Telephone Company, for each customer and then rounded to the nearest minute.

3. Carrier Common Line Access Service, Federal Universal Service Charge, ISDN Line Ports and DS1 Line Port (Cont'd)

3.8 Rate Regulations (Cont'd)

3.8.3 Unmeasured Feature Group A and B Usage

When Carrier Common Line Access is provided in association with Feature Group A or Feature Group B Switched Access Service in Telephone Company offices that are not equipped for measurement capabilities, assumed average interstate access minutes will be used to determine Carrier Common Line Access charges. These assumed access minutes are as set forth in the exchange carriers' access tariffs.

3.8.4 Percent Interstate Use (PIU)

When the customer reports interstate and intrastate use of in-service Switched Access Service, Carrier Common Line charges will be billed only to interstate Switched Access Service access minutes based on the data reported by the customer as set forth in 2.3.11 preceding (Jurisdictional Reports), except where the Telephone Company is billing according to actuals by jurisdiction. Interstate Switched Access Service access minutes will, after adjustment as set forth in 3.6.4 preceding (Resale), when necessary, be used to determine Carrier Common Line Charges as set forth in 3.8.5 following.

3. Carrier Common Line Access Service, Federal Universal Service Charge, ISDN Line Ports and DS1 Line Port (Cont'd)

3.8 Rate Regulations (Cont'd)

3.8.5 Determination of Premium and Non-Premium Charges

After the adjustments as set forth in 3.6.4 and 3.8.4 preceding have been applied, when necessary, to Switched Access Service access minutes, charges for the involved customer account will be determined as follows:

(A) Access minutes for all premium rated Switched Access Service subject to Carrier Common Line charges will be multiplied by the Premium Access per minute rate as set forth in 17.4.3 following.

(B) Access minutes for all non-premium rated Switched Access Service subject to Carrier Common Line charges will be multiplied by the Non-Premium Access per minute rate as set forth in 17.4.3 following.

(C) Access minutes for all FGB Access Services subject to Carrier Common Line Charges will be multiplied by the Premium Access per minute rate as set forth in 17.4.3 following.

(D) Carrier Common Line charges shall not be reduced as set forth in 3.6.1 preceding unless Switched Access Charges, as set forth in Section 6. following, are applied to the customer's Switched Access Services.

(E) Terminating Premium Access or Non-Premium Access, per minute charge(s) apply to:

- all terminating access minutes of use;

- less those terminating access minutes of use associated with Wireless Switching Centers (WSCs).

- all originating access minutes of use associated with FGA Access Services where the off-hook supervisory signaling is forwarded by the customer's equipment when the called party answers;

3. Carrier Common Line Access Service, Federal Universal Service Charge, ISDN Line Ports and DS1 Line Port (Cont'd)

3.8 Rate Regulations (Cont'd)

3.8.5 Determination of Premium and Non-Premium Charges (Cont'd)

(E) (Cont'd)

- all originating access minutes of use associated with calls placed to 700, 800 series and 900 numbers, less those originating access minutes of use associated with calls placed to 700, 800 series and 900 numbers for which the customer furnishes for each month a report of either the number of calls or minutes or a report of the percent of calls or minutes that terminate in a Switched Access Service that is assessed Carrier Common Line charges.

When the customer makes this report available to the Telephone Company in advance of billing, these minutes of use will be charged on the current bill as originating minutes of use as set forth in (F) following. If a billing dispute arises concerning the customer provided report, the Telephone Company will request the customer to provide the data the customer used to develop the report. The Telephone Company will not request such data more than once a year. The customer shall supply the data within 30 days of the Telephone Company request.

When this report is not available to the Telephone Company until after billing, it shall be used by the Telephone Company to calculate and post a credit to the customer's account. The credit shall be posted to the customer's account within 30 days of receipt of the report. The credit shall be calculated by multiplying the number of access minutes of use, for which a credit is determined to be applicable, times the difference between the terminating and originating Carrier Common Line charges in effect when the calls were completed.

3. Carrier Common Line Access Service, Federal Universal Service Charge, ISDN Line Ports and DS1 Line Port (Cont'd)

3.8 Rate Regulations (Cont'd)

3.8.5 Determination of Premium and Non-Premium Charges (Cont'd)

(F) The originating Premium Access or Non-Premium Access, per minute charge(s) apply to:

- all originating access minutes of use;

  -- less those originating access minutes of use associated with FGA Access Services where the off-hook supervisory signaling is forwarded by the customer's equipment when the called party answers;

  -- less all originating access minutes of use associated with calls placed to 700, 800 and 900 numbers;

  -- less those originating access minutes of use associated with Wireless Switching Centers (WSCs).

  -- plus all originating access minutes of use associated with calls placed to 700, 800 series and 900 numbers for which the customer furnishes for each month a report of either the number of calls or minutes or a report of the percent of calls or minutes that terminate in a Switched Access Service that is assessed Carrier Common Line charges, and for which a corresponding reduction in the number of terminating access minutes of use has been made as set forth in (E) preceding.

3. Carrier Common Line Access Service, Federal Universal Service Charge, ISDN Line Ports and DS1 Line Port (Cont'd)

3.9 Federal Universal Service Charge

The Federal Universal Service Charge (FUSC) recovers the Telephone Company's contribution to various federal universal service funds. The Telephone Company will apply a surcharge factor each month to the billed charges for interstate access services provided to end users from this Tariff. FUSC will not apply to any billed charges for an end user when the interstate access service provided to the end user qualifies under the federal universal service guidelines for Lifeline Assistance. FUSC will not apply to interstate access services purchased by customers that resell these services to end users as part of an interstate telecommunications service and are required to contribute to the various federal universal service funds. In case of a dispute regarding whether the customer is reselling services and contributing to the various federal universal service funds, the Telephone Company may request a signed certification to that effect from the customer.

3.9.1 Rate Regulations

The FUSC Surcharge Factor is set forth in Section 17.1.2(A), following.

ACCESS SERVICE

4. End User Access Service

4.1 Regulations, Rates and Charges

The following Rules and Regulations apply only to this tariff.

4.2 End User Access Service

The Telephone Company will provide End User Access Service (End User Access) to end users who obtain local exchange service from the Telephone Company under its general and/or local exchange tariffs.

4.2.1 General Description

End User Access provides for the use of an End User Common Line (EUCL). Use of a subscriber line is provided twenty-four (24) hours a day, seven (7) days a week.

4.2.2 Limitations

(A) Exclusions

Neither a telephone number nor detail billing is provided with End User Access. Directory listings and Intercept arrangements are not included with End User Access.

(B) Lifeline Assistance

Lifeline Assistance plans may reduce or eliminate End User Access Charges to certain qualifying end users.

4.2.3 Undertaking of the Telephone Company

The Telephone Company will provide End User Access at rates and charges as set forth in rate sections following, as follows:

- Use of an EUCL by an end user in connection with interstate Access Services provided under this tariff. Such use will be provided when the end user obtains local exchange service.

4. End User Access Service (Cont'd)

4.2 End User Access Service (Cont'd)

4.2.4 Obligations of Radio Common Carriers

When the end user is a Radio Common Carrier (RCC) or provider of paging service, such end users shall designate whether the local exchange service they are provided by the Telephone Company is used as an access line for RCC or paging services, or used as an administrative line.

4.2.5 Payment Arrangements and Credit Allowances

(A) Minimum Period

The minimum period for which EUCL End User Access is provided to an end user and for which charges are applicable is the same as that in the general and/or local exchange tariffs for the associated local exchange service.

(B) Cancellation of Orders

End User Access is canceled when the order for the associated local telephone exchange service is canceled. No cancellation charges apply.

(C) Changes to Orders

When changes are made to order for the local exchange service associated with End User Access, any necessary changes will be made for End User Access. No charges will apply.

(D) Allowance for Interruptions

When there is an interruption to an EUCL, requested End User Access credit allowances for interruptions will be provided as set forth for credit allowance for interruptions in 2.4.4 preceding.

(E) Temporary Suspension of Service

When an end user temporarily suspends its local exchange service which is associated with EUCL, one-half of the EUCL per month charge will be temporarily suspended for the time period the local exchange service is suspended.

4. End User Access Service (Cont'd)

4.2 End User Access Service (Cont'd)

4.2.6 Rate Regulations

(A) Who Is Billed

EUCL per month charges will be billed to the end user of the associated local exchange service. The EUCL charge will be billed in advance.

(B) Multiparty Service

The EUCL charge for each multiparty subscriber shall be assessed as if such subscriber had subscribed to single-party service.

(C) Pay Telephone Service

The EUCL-Multiline Business rate will be assessed when a Payphone Service Provider obtains an exchange service line for the purposes of offering pay telephone service.

(D) Business Services

(1) Single Line Service

When an end user is provided a single local business exchange service in a state, multiparty and centrex services included, and when the local business exchange service is provided under the general and/or local exchange service tariffs, the EUCL Single Line Business - Individual line or trunk rate as set forth in rate sections following, applies to each such business individual line or trunk. In the case of multiparty service each party is deemed to be a user of an EUCL.

4. End User Access Service (Cont'd)

4.2 End User Access Service (Cont'd)

4.2.6 Rate Regulations (Cont'd)

(D) Business Services (Cont'd)

(2) Multiline Service

When an end user is provided more than one local business exchange service in a state by the same Telephone Company, pay telephone, multiparty service included, and when the local exchange service is provided under the general and/or local exchange service tariffs that is not covered by (C) following (Centrex), the EUCL-Multiline Business - Individual line or trunk rate as set forth in rate sections following, applies to each such Multiline Business individual line or trunk. In the case of multiparty service each party is deemed to be a user of an EUCL.

4. End User Access Service (Cont'd)

4.2 End User Access Service (Cont'd)

4.2.6 Rate Regulations (Cont'd)

(D) Business Services (Cont'd)

(3) Centrex CO and Centrex CO-like Services

For business Centrex CO and business Centrex CO-like service lines or trunks, the EUCL-Centrex CO rate as set forth in rate sections following applies to each business line or trunk.

Centrex CO is a service that (1) uses a portion of a Telephone Company switch located at the Telephone Company central office to meet the customer's internal needs and serves as the customer's interface with the local and interexchange networks and (2) links the customer's main stations to the Telephone Company switch with subscriber loops.

Centrex CO-like services are service (e.g., ESSX, Centron, Centraflex, Airport Service, Hotel-Motel Service) that operate in a manner that is substantially the same as Centrex CO and (1) are provided using switches located at Telephone Company central offices and (2) link customer main stations to the Telephone Company switch with subscriber loops.

Centrex CO or CO-like service provided to a college, university or school may serve both the college, university or school offices and the student or faculty dormitory (residential) quarters. When provided to residential quarters, the residential portion of the service is commonly known as dormitory service. Residential charges will apply to lines to the student or faculty dormitory (residential) quarters as set forth in rate sections following. Business charges for lines to the university, college or school offices will apply as set forth in rate sections following. Charges shall be based on the number of residence and business lines reported to the Telephone Company by the end user.

4. End User Access Service (Cont'd)

4.2 End User Access Service (Cont'd)

4.2.6 Rate Regulations (Cont'd)

(E) Radio Common Carriers

For each local exchange service used only as a path for the transmission of Radio Common Carrier (RCC) traffic between the Telephone company serving wire center and the RCC's radio equipment, End User Access charges do not apply. End User Access Charges will apply to the Radio Common Carrier's local exchange service used for administrative purposes. This shall also include those Radio Common Carriers providing maritime service under Part 81 of the FCC Rules and Regulations.

A Radio Common Carrier is described as a common carrier engaged in the provision of Public Mobile Service, as defined in Part 22 of the FCC Rules and Regulations which is not also in the business of providing landline local exchange telephone service.

(F) Remote Call Forwarding

For each local exchange service provided as Remote Call Forwarding (RCF) residential or business service, under the general and/or local exchange service tariffs, End User Access charges do not apply.

4. End User Access Service (Cont'd)

4.2 End User Access Service (Cont'd)

4.2.6 Rate Regulations (Cont'd)

(G) Residence Services

(1) Single Line and Multiline Service

When an end user is provided local residence exchange service(s) in a state, multiparty service included, and when the local residence exchange service is provided under the general and/or local exchange service tariffs, the EUCL Residence - Individual line or trunk rate as set forth in rate sections following, applies to each such local residence exchange service. In the case of multiparty service each party is deemed to be a user of an EUCL. These rates may be reduced as set forth in 4.6.8 following (Telephone Lifeline Assistance).

(2) Centrex CO and CO-Like Dormitory Service

Regulations concerning the application of EUCL charges to student or faculty dormitory (residential) quarters served by Centrex CO or CO-like service are set forth in 4.6.4(C) preceding.

4. End User Access Service (Cont'd)

4.2 End User Access Service (Cont'd)

4.2.6 Rate Regulations (Cont'd)

(H) Telephone Lifeline Assistance

(1) Without F.C.C. Certification

When an end user is provided a local residence exchange service and the residential local exchange rate for the end user is reduced for end users meeting a state established means test that is subject to verification, the applicable EUCL Residence - Individual line or trunk rate as set forth in rate sections following, shall be reduced by 50 percent, if the local exchange rate reduction is an equivalent amount as provided for in Paragraph 69.104(j) of Part 69 of the F.C.C. Rules and Regulations.

(2) With F.C.C. Certification

When an end user is provided a local residence exchange service and the residential local exchange rate is reduced for end users eligible for a telephone lifeline assistance plan requiring verification and approval by the FCC as provided for in paragraph 69.104(k) of Part 69 of the FCC Rules and telephone line to the household's principal residence to the extent of the state assistance, or waived in full if the state assistance equals or exceeds the residential End User Common Line Charge.

(I) Integrated Services Digital Network (ISDN) Services

(1) ISDN Basic Rate Interface (BRI)

When an end user is provided residence or business local exchange service under any general and/or local exchange service tariff(s) using an Integrated Services Digital Network (ISDN) Basic Rate Interface (BRI) arrangement, one (1) EUCL Residence- Individual line or trunk charge or one (1) EUCL Single Line Business- Individual line or trunk charge applies to each ISDN BRI arrangement.

(2) ISDN Primary Rate Interface (PRI)

When an end user is provided residence or business local exchange service under any general and/or local exchange service tariff(s) using an Integrated Services Digital Network (ISDN) Primary Rate Interface (PRI) arrangement, five (5) EUCL Multiline Business- Individual line or trunk charges apply to each ISDN PRI arrangement.

5. Access Ordering

5.1 General

This section sets forth the regulations and order related charges for services set forth in other sections of this tariff. Order related charges are in addition to other applicable charges for the services provided.

An Access Order is an order to provide the customer with Switched Access, Special Access, and Public Packet Data Network or Access Related Service or to provide changes to existing services.

A customer may order any number of services of the same type and between the same premises on a single Access Order. All details for services for a particular order must be identical except for those for multipoint service.

The customer shall provide to the Telephone Company the order information required in 5.2 following, and in addition the customer must also provide:

- Customer name and premises address(es).
- Billing name and address (when different from customer name and address).
- Customer contact name(s) and telephone number(s) for the following provisioning activities: order negotiation, order confirmation, interactive design, installation and billing.

5. Access Ordering (Cont'd)

5.1 General (Cont'd)

5.1.1 Service Installation

The Telephone Company will provide the Access Service in accordance with the customer's requested service date, subject to the constraints established by the Telephone Company schedule of applicable service dates.

The Telephone Company shall make available to all customers, upon request, a schedule of applicable service intervals for Switched Access, Special Access and Public Packet Data Network Services. The schedule shall specify the applicable service interval for services and the quantities of services that can be provided by a requested service date. Any associated material will be provided upon request and within a reasonable period of time.

The Telephone Company will not accept orders for service dates which exceed the applicable service date by more than six months.

Access Services will be installed during Telephone Company business days. If a customer requests that installation be done outside of scheduled work hours, and the Telephone Company agrees to this request, the customer will be subject to applicable Additional Labor Charges as set forth in 17.4.3(A) following.

When the Telephone Company has identified in NECA Tariff F.C.C. No. 4, Wire Center Information that it has not received a bona fide request for Direct Trunked Transport and a customer subsequently orders Direct Trunked Transport, the Telephone Company will work cooperatively with the customer to provide Direct Trunked Transport within 90 days of receipt of an order.

5. Access Ordering (Cont'd)

5.1 General (Cont'd)

5.1.2 Expedited Orders

When placing an Access Order, a customer may request a service date that is prior to the applicable service date. Additionally, a customer may also request an earlier service date on a pending Access Order. In this case, an Access Order modification as set forth in 5.4 following would be required. If the Telephone Company determines that the service can be provided on the requested date and that additional labor cost or extraordinary costs are required to meet the requested service date, the customer will be notified and will be provided with an estimate of the additional charges involved. Charges will be billed at actual cost, not to exceed 10 percent over estimated charges. Such additional charges will be determined and billed to the customer as explained following.

To calculate the additional labor charges, the Telephone Company will, upon authorization from the customer to incur the additional labor charges, keep track of the additional labor hours used to meet the request of the customer and will bill the customer at the applicable Additional Labor charges as set forth in 17.4.3(A) following.

When the request for expediting occurs subsequent to the issuance of the Access Order, a Service Date Change Charge as set forth in 17.4.1(B) following also applies.

5.1.3 Selection of Facilities for Access Orders

The option to request a specific transmission path or channel is only provided for High Capacity Facilities Special Access, or as provided for under Special Facilities Routing as set forth in Section 11. following.

When there are High Capacity facilities to a hub on order or in service for the customer's use, the customer may request a specific channel or transmission path be used to provide the Switched or Special Access Service requested in an Access Order. The Telephone Company will make a reasonable effort to accommodate the customer request.

5. Access Ordering (Cont'd)

5.2 Ordering Requirements

5.2.1 Switched Access Service

When ordering Switched Access service, the customer must specify whether the service is to be provided as (1) Direct Trunked Transport to the end office, (2) Direct Trunked Transport to a tandem which connects with Tandem Switched Transport from the tandem to the end office or (3) Tandem Switched Transport to the end office. When all or a portion of service is ordered as Direct Trunked Transport, the customer must specify the type and quantity of Direct Trunked Transport facility (e.g., Voice Grade or High Capacity DS1 or DS3).

The Customer must also specify the type of Entrance Facility to be used for Switched Access (e.g., Voice Grade or High Capacity). For High Capacity Entrance Facilities, the customer must specify the facility assignment and the channel assignment for each trunk.

Direct Trunked Transport is available at all tandems and at all end offices except those end offices identified in National Exchange Carrier Association, Inc. Tariff F.C.C. No. 4 as not having the capability to provide Direct Trunked Transport. Direct Trunked Transport is not available: (1) from end offices that provide equal access through a Centralized Equal Access arrangement, or (2) from end offices that lack recording or measurement capability.

Normally, Direct Trunked Transport of originating 800 series calls from an end office is available only from Service Switching Point (SSP) equipped end offices. However, certain SSP equipped end offices cannot accommodate the direct trunking of the 888 service access code. These end offices are identified in National Exchange Carrier Association, Inc. Tariff F.C.C. No. 4. Additionally, certain non-SSP equipped end offices can accommodate direct trunking of originating 800 series calls. These end offices are also identified in National Exchange Carrier Association, Inc. Tariff F.C.C. No. 4.

When the customer has both Tandem Switched Transport and Direct Trunked Transport at the same end office, the customer will be provided Alternate Traffic Routing as set forth in 6.4.6 following.

5. Access Ordering (Cont'd)

5.2 Ordering Requirements (Cont'd)

5.2.1 Switched Access Service (Cont'd)

A customer's Local Transport may be connected to the Entrance Facility of another customer, providing the other customer submits a Letter of Authorization for this connection and assumes full responsibility for the cost of the Entrance Facility.

(A) Feature Group A

Orders for Feature Group A Switched Access Service shall be in lines.

When placing an order for Feature Group A Switched Access Service, the customer shall provide the following information in addition to that set forth in 5.1 preceding:

- The number of lines and the first point of switching (i.e., Dial Tone Office)
- Optional Features
- Whether the Off-hook Supervisory Signaling is provided by the customer's equipment before the called party answers, or is forwarded by the customer's equipment when the called party answers
- Lines to be provided as single lines
- Lines to be arranged in multiline hunt group arrangements
- Directionality (1-way, 2-way, etc.)
- A projected Percentage of Interstate Use (PIU) as set forth in 2.3.11 preceding
- The Interexchange Carrier to which the service is connected or, in the alternative, specify the means by which the FGA access communications are transported to another state.

5. Access Ordering (Cont'd)

5.2 Ordering Requirements (Cont'd)

5.2.1 Switched Access Service (Cont'd)

(B) Feature Group B

Orders for Feature Group B Switched Access Service shall be in trunks.

When placing an order for Feature Group B Service, the customer shall provide, the following information in addition to that set forth in 5.1 preceding:

- The number of trunks
- The end office, except when FGB is provided through a centralized equal access arrangement, when direct routing is desired
- The access tandem office when tandem routing is desired
- Optional Features
- Trunks to be provided as single trunks
- Trunks to be arranged in trunk group arrangements
- Directionality (1-way, 2-way, etc.)
- A projected percentage of interstate use (PIU) as set forth in 2.3.11 preceding
- The Interexchange Carrier to which the service is connected or, in the alternative, specify the means by which the FGB access communications are transported to another state.
- The access code dialing arrangement (i.e., a uniform access code of 950-XXXX or an Abbreviated Dialing Arrangement (ADA) access code of N or NX)
- For Feature Group B switched access service to a Wireless Switching Center (WSC) directly interconnected to a Telephone Company access tandem office, the customer shall provide information to the Telephone Company indicating the NXX code(s) to be accessed.

5. Access Ordering (Cont'd)

5.2 Ordering Requirements (Cont'd)

5.2.1 Switched Access Service (Cont'd)

(C) Feature Group C, Feature Group D, Interim NXX Translation and SS7 Signaling

When placing an order for Feature Group C and D Switched Access Service, the customer shall provide:

- The number of BHMC from the customer designated premises to the end office location by Feature Group and by type of BHMC, or
- The number of trunks desired between customer designated premises and an entry switch.
- The number of BHMC or trunks required for or to be converted to an SS7 Signaling capability.
- Optional Features
- Interim NXX Translation options.
- A projected Percentage of Interstate Use (PIU)as set forth in 2.3.11 preceding.
- For Feature Group D switched access service to a Wireless Switching Center (WSC) directly interconnected to a Telephone Company access tandem office, the customer shall provide information to the Telephone Company indicating the NXX code(s) to be accessed.

When BHMC information is provided it is used to determine the number of transmission paths as set forth in 6.2.5 following. The BHMC may be determined by the customer in the following manner. For each day (8 am to 11 pm, Monday through Friday, excluding national holidays), the customer shall determine the highest number of minutes of use for a single hour (e.g., 55 minutes in the 10-11 a.m. hour). The customer shall, for the same hour period (i.e., busy hour) for each of twenty consecutive business days, pick the twenty consecutive business days in a calendar year which add up to the largest number of minutes of use. Both originating and terminating minutes shall be included. The customer shall then determine the average busy hour minutes of capacity (i.e., BHMC) by dividing the largest number of minutes of use figure for the same hour period for the consecutive twenty business day period by 20. This computation shall be performed for each end office the customer wishes to serve. These determinations thus establish the forecasted BHMC for each end office.

5. Access Ordering (Cont'd)

5.2 Ordering Requirements (Cont'd)

5.2.1 Switched Access Service (Cont'd)

(C) Feature Group C, Feature Group D, Interim NXX Translation and SS7 Signaling Cont'd)

Customers may, at their option, order FGD by specifying the number of trunks desired between customer designated premises and an end office, access tandem. When ordering by trunk quantities rather than BHMC quantities to an access tandem, the customer must also provide the Telephone Company an estimate of the amount of traffic it will generate to and/or from each end office subtending the access tandem to assist the Telephone Company in its own efforts to project further facility requirements.

When Feature Group C or D is ordered with the Interim NXX Translation optional feature, the customer shall specify the Service Access Code(s) (e.g., 900) and their associated NXX code(s) to be translated within the entire LATA or Market Area. The initial and subsequent orders to add, change, or delete Interim NXX Translation codes shall be placed separately or in combination with orders to change Feature Group C or D Switched Access BHMC or trunks. Customer assigned NXX codes which have not been ordered will be blocked.

Orders for the Interim NXX Translation optional feature shall not be required until such time as a customer other than an MTS/WATS provider requests Interim NXX Translation of Service Access Codes. Upon receipt of such order, the Telephone Company shall notify the MTS/WATS provider of the activation of the Interim NXX Translation Service for the Service Access Code. Following such initial activation, all customers are required to place orders for Interim NXX Translation of the Service Access Code and the Interim NXX Translation charge for the Service Access Code shall apply as set forth in Section 17 following.

5. Access Ordering (Cont'd)

5.2 Ordering Requirements (Cont'd)

5.2.1 Switched Access Service (Cont'd)

(D) SS7 Optional Feature

When Feature Group C or D is ordered with the SS7 optional feature, in addition to information listed in 5.2.1(C) preceding, the customer shall specify a reference to existing signaling connections or reference a related SS7 signaling connection order. When ordering SS7 signaling, the customer shall provide the Signaling Transfer Point codes, location identifier codes and circuit identifier codes. In addition, the customer shall work cooperatively with the Telephone Company to determine the number of SS7 signaling connections required to handle its signaling traffic.

For 800 Data Base Access Service, as described in 6.1.3(A) & (C) following, the customer must order FGC or FGD to those access tandems or end offices designated as Service Switching Points (SSP) for 800 data base service or to those non-SSP equipped end offices that can accommodate direct trunking of originating 800 calls. SSP equipped end offices and access tandems and non-SSP equipped end offices that can accommodate direct trunking of originating 800 calls are designated in National Exchange Carrier Association, Inc. Tariff F.C.C. No. 4, Wire Center Information.

Certain SSP equipped end offices that cannot accommodate direct trunking of originating 888 calls are designated in National Exchange Carrier Association, Inc. Tariff F.C.C. No. 4, Wire Center Information. All traffic originating from end offices not equipped to provide SS7 signaling and routing, not able to accommodate direct trunking of originating 800 series calls or equipped with SS7 signaling but not able to accommodate direct trunking of originating 888 calls, require routing via an access tandem where SSP functionality is available.

5. Access Ordering (Cont'd)

5.2 Ordering Requirements (Cont'd)

5.2.2 Special Access Service

When placing an order for Special Access Service the customer must specify:

- the customer designated premises or hubs or ADM equipped wire centers involved.
- type of service (e.g., Voice Grade, High Capacity, etc.) - the channel interface(s)
- technical specification package
- options desired
- for multipoint services, the channel interface at each customer designated premises may, at the request of the customer, be different but all such interfaces shall be compatible.
- that the traffic consists of more than ten percent interstate traffic.

All part-time Video and Program Audio services are subject to a service inquiry. A service inquiry is a request to the Telephone Company to determine if facilities exist to provide the service ordered and to determine the service date on which service can be provided to the customer.

Where the Special Access Service is exempt from the Special Access Surcharge, as set forth in 7.3 following the customer shall furnish written certification to that effect as set forth in 7.3.3 following.

When ordering bridging and/or multiplexing, the Customer must specify the telephone company hub(s) from which they desire service. The Customer must specify only those hubs that provide the type of service ordered and interconnect with the wire center(s) from which the customer requires service. The Wire Center section of National Exchange Carrier Association, Inc. Tariff F.C.C. No. 4 identifies hub types (e.g., Digital Data, High Capacity Multiplexing, etc.) and hub levels (i.e., Hub, Terminus Hub, Intermediate Hub and Super-Intermediate Hub). Additionally, the Subtending section of Tariff F.C.C. No. 4 identifies wire centers and the Intermediate and/or Super-Intermediate Hubs with which they interconnect.

There is a Special Access Optional Rate Plan for Synchronous Optical Channel Service and High Capacity Service. The Synchronous Optical Channel Service Optional Rate Plan is a Term Discount plan. The High Capacity Service Optional Rate Plan is also a Term Discount plan. When ordering a Synchronous Optical Channel Service Term Discount Optional Rate Plan, or an upgrade to the plan, discontinuance charges, as specified in 7.2.8 following, will not apply if the conditions set forth in the following are met:

5. Access Ordering (Cont'd)

5.2 Ordering Requirements (Cont'd)

5.2.2 Special Access Service (Cont'd)

Term Discounts - Upgrades in Capacity (DS1 to DS3) (OC3/OC3C to OC12 and/or OC48)

- The customer's order for the disconnection of the existing DS1/OC3/OC3C/OC12 Service and the installation of the new DS3/OC12/OC48 Service are received at the same time and specifically reference the application of upgrade in capacity.
- The customer's disconnect order for the existing DS1/OC3/OC3C/OC12 Service must reference the DS1/DS3/OC3/OC3C/OC12/OC48 Service installation order.

Customer orders to install and disconnect DS1, OC3/OC3C or OC12 services provided under a Term Discount Plan where the number of DS1, OC3/OC3C or OC12s remains constant and the customer wishes to maintain the existing Term Discount period and minimum service period must:

- Be received at the same time.
- Reference continuation of the existing Term Discount period and the minimum service period on both the installation and disconnect orders.

5.2.3 WATS or WATS-Type Services

Special Access Service may be ordered for connection with FGA, FGB, FGC or FGD Switched Access Service at Telephone Company designated WATS Serving Offices (WSOs) for the provision of WATS or WATS-type Services and may be ordered separately by a customer other than the customer which orders the FGA, FGB, FGC or FGD Switched Access Service. For the Special Access Service the customer shall specify:

- the customer designated premises at which the Special Access service terminates
- the type of line (i.e., two-wire or four-wire)
- the type of calling (i.e., originating, terminating or two-way)
- type of Supervisory Signaling.

When the optional screening, switching and/or recording functions are not provided at the customer serving wire center, Channel Mileage, as set forth in 7.2.1 following, must be ordered between that wire center and the nearest WSO where the screening, switching and/or recording functions can be provided.

5.2.4 Mixed Use Facilities - Switched and Special Access

Mixed use is the provision of both Switched and Special Access Services over the same High Capacity facilities. Mixed use facilities to a hub will be ordered and provided as Special Access Service. Where mixed use is employed, individual services utilizing these facilities must be ordered either as Switched Access Service or Special Access Service as further elaborated and set forth in 6.4.7 and 7.2.7 following. When placing the order for the individual service(s), the customer must specify a channel assignment for each service ordered.

5. Access Ordering (Cont'd)

5.2 Ordering Requirements (Cont'd)

5.2.5 Miscellaneous Services

Testing Service, Additional Labor, Telecommunications Service Priority and Special Facilities Routing shall be ordered with an Access Order or may subsequently be added to a pending order at any time up to and including the service date for the access service. When miscellaneous services are added to a pending order a service date change may be required. When a service date change is required, the service date change charge as set forth in 17.4.1(A) following will apply. When miscellaneous services are added to a pending order, charges for a design change as set forth in 17.4.1(C) following will apply when an engineering review is required. If both a service date change and an engineering review are required, both the Service Date Change Charge and the Design Change Charge will apply as set forth in 5.4.3(B) following.

The rates and charges for these services, as set forth in Section 17. of this tariff, will apply in addition to the ordering charges set forth in Section 17. and the rates and charges for the Access Service with which they are associated.

Additional Engineering is not an ordering option, but will be applied to an Access Order when the Telephone Company determines that Additional Engineering is necessary to accommodate a customer request. Additional Engineering will only be required as set forth in 13.1 following. When it is required, the customer will be so notified and will be furnished with a written statement setting forth the justification for the Additional Engineering as well as an estimate of the charges. If the customer agrees to the Additional Engineering, a firm order will be established. If the customer does not want the service or facilities after being notified that Additional Engineering of Telephone Company facilities is required, the order will be withdrawn and no charges will apply. Once a firm order has been established, the total charge to the customer for the Additional Engineering may not exceed the estimated amount by more than 10%.

5. Access Ordering (Cont'd)

5.2 Ordering Requirements (Cont'd)

5.2.6 Frame Relay Access Service

When ordering Frame Relay Access Service, a minimum of two port connections are required for data to be transported between customer designated premises.

When placing an order for Frame Relay Access Service the customer must specify:

- the number of Permanent Virtual Connections (PVCs) required;
- the location of the ports for each PVC;
- the Committed Information Rates (CIRs) that will be associated with each PVC;
- that the traffic consists of more than ten percent interstate traffic.

The port connecting the special access facility to the telephone company frame relay switch must be ordered and provided at the same speed as the special access facility.

When connecting to the port of another customer, the ordering customer must obtain authorization from the other customer.

When an extended PVC is ordered, the customer is responsible for placing the order with all telephone companies involved.

5.2.7 Asynchronous Transfer Mode Cell Relay Access Service (ATM-CRS)

When placing an order for ATM-CRS, the customer must specify:

- the customer designated premises;
- the type (s) of ATM-CRS interface (s);
- the speed for each ATM-CRS Port;
- the number, bandwidth capacity and traffic routing prioritization parameter for each ATM-CRS Virtual Path associated with an ATM-CRS Port;
- the ATM-CRS Ports and Virtual Paths associated with ATM-CRS Virtual Circuit Channels being established by the Telephone Company, if applicable;
- options desired, if applicable;
- that the traffic consists of more than 10% interstate traffic.

When connecting to the ATM-CRS Port of another customer, the ordering customer must obtain authorization from the other customer.

5. Access Ordering (Cont'd)

5.3 Access Orders For Services Provided By More Than One Telephone Company

Access Services provided by more than one Telephone Company are services where one end of the Local Transport or Channel Mileage element is in the operating territory of one Telephone Company and the other end of the element is in the operating territory of a different Telephone Company or where the Interim NXX Translation service and the end office are not provided by the same Telephone Company.

The ordering procedure for this service is dependent upon the billing arrangement, as set forth in 2.4.7 preceding, to be used by the Telephone Companies involved in providing the Access Service. The Telephone Company will notify the customer which of the ordering procedures will apply.

5.3.1 Non Meet Point Billing Ordering - FGA

(A) Single Company Billing Ordering
The Telephone Company receiving the order from the customer will arrange to provide the service and bill the customer as set forth in 2.4.7(A)(1). The customer will place the order with the Telephone Company as follows:

For FGA Switched Access Service the customer will place the order with the Telephone Company in whose territory the first point of switching is located. The first point of switching is the dial tone office.

When the first point of switching is not in the same Telephone Company's territory as the Interexchange Carrier premises, the customer must supply a copy of the order to the Telephone Company in whose territory the Interexchange Carrier premises is located and any other Telephone Company(s) involved in providing the service. When service is provided through a centralized equal access provider, the customer must supply a copy of the order to that provider.

5. Access Ordering (Cont'd)

5.3 Access Orders For Services Provided By More Than One Telephone Company (Cont'd)

5.3.2 Meet Point Billing Ordering

Each Telephone Company will provide its portion of the Access Service within its operating territory to an interconnection point(s) with the other Telephone Company(s). Billing Percentages will be determined by the Telephone Companies involved in providing the Access Service and listed in National Exchange Carrier Association, Inc. Tariff F.C.C. No. 4. Each Telephone Company will bill the customer for its portion of the service as set forth in 2.4.7. All other appropriate charges in each Telephone Company tariff are applicable.

For the service(s) ordered as set forth following, the customer must also supply a copy of the order to the Telephone Company in whose operating territory a customer designated premises is located and any other Telephone Company(s) involved in providing the service. Additionally, when service is provided through a centralized equal access provider, the customer must supply a copy of the order to that provider.

(A) For Feature Group A and B Switched Access Services, the customer must place an order with the Telephone Company in whose territory the first point of switching is located, (i.e., FGA - dial tone office, FGB - access tandem or end office). The Telephone Company will designate the first point(s) of switching for FGB Services where the Telephone Company elects to provide equal access through a centralized equal access arrangement. Those Telephone Company offices providing equal access through centralized arrangements are identified in National Exchange Carrier Association, Inc. Tariff F.C.C. No. 4.

(B) For Feature Group C and D Switched Access Services, the customer must place an order with the Telephone Company in whose territory the end office is located. Customers may, at their option, order FGD to the access tandem. When ordered to the access tandem, and the access tandem and the end office are not in the same Telephone Company operating territory, the customer must also supply a copy of the order to each additional Telephone Company subtending the access tandem.

5. Access Ordering (Cont'd)

5.3 Access Orders For Services Provided By More Than One Telephone Company (Cont'd)

5.3.2 Meet Point Billing Ordering (Cont'd)

(C) Customers ordering Special Access Service to be interconnected with Switched Access Services at Telephone Company designated WATS Serving Offices for the provision of WATS or WATS-type Services must place an order with each Telephone Company in whose territory the end office and the WATS Serving Office are located, if they are not collocated.

(D) Except for Special Access Service as set forth in (C) above or as set forth in (E) below, the customer may place the order for a Special Access Service with either Exchange Telephone Company.

(E) For Special Access Service involving a hub(s) the customer must place the order with the Telephone Company(s) in whose territory the hub(s) is located.

(F) For initiation, additions, changes or deletions to the Interim NXX Translation code(s), the customer must place an order with the Telephone Company who provides the Interim NXX Translation. The customer must also provide a copy of the order to the Telephone Companies subtending the Interim NXX Translation office.

(G) For Special Access used in conjunction with Asynchronous Transfer Mode Cell Relay Access Service (ATM-CRS), the customer must place the order with each Telephone Company that provides an ATM-CRS Port Connection.

5. Access Ordering (Cont'd)

5.4 Charges Associated with Access Ordering

5.4.1 Access Order Charge

The Access Order Charge is applied to all customer requests for new Special Access, Public Packet Data Network and Switched Access Service. In addition, the Access Order Charge is applicable to customer requests for additions, changes or rearrangements to existing Special Access, Public Packet Data Network , Switched Access and Digital Subscriber Line Access Services with the following exceptions:

The Access Order Charge does not apply:

- When a Service Date Change Charge is applicable.
- When a Design Change Charge is applicable.
- To administrative changes as set forth in 6.4.1(B)(3) and 7.2.2(C)(3) and 8.1.5(D), 16.1.2 (B) (2) (b), and 16.2.4 (B) (2) (b), following.
- When a change to a pending order does not result in the cancellation of the pending order and the issuance of a new order.
- When the Interim NXX Translation charge is applicable.
- When a Miscellaneous Service Order Charge is applicable.
- When a PIC Charge is applicable.
- When a Telephone Company initiated network reconfiguration requires a customer's existing access service to be reconfigured.
- When a service with an ICB rate is converted to a similar service with a non-ICB tariff rate prior to the expiration of the ICB.
- When a Billing Name and Address Order charge is applicable.
- When a 900 Blocking Service charge is applicable.
- When Payphone Service Providers (PSPs) obtain Coin Supervision Additive Service in conjunction with local exchange service lines for the provision of pay telephone service.
- When a customer requests a change of trunks from tandem-switched transport to direct trunked transport or orders the disconnection of overprovisioned trunks, providing:
- the change is ordered anytime between June 17, 1997 and December 31, 1998 and
- the change is completed no later than March 31, 1999 and
- the orders to disconnect existing trunks and to connect the new trunks are placed at the same time.
- To ADSL Access Service as set forth in Section 8, following.
- When a DSL Network Reconfiguration Charge is applicable.

5. Access Ordering (Cont'd)

5.4 Charges Associated with Access Ordering

5.4.1 Access Order Charge

The Access Order Charge will be applied on a per order basis to each order received by the Telephone Company or copy of an order received by the Telephone Company pursuant to 5.3.1 preceding and 5.3.2 preceding, except by the Telephone Company applying the Interim NXX Translation Charge, and is in addition to other applicable charges as set forth in this and other sections of this tariff.

The Access Order Charge will be applied on a per order basis for any change, rearrangement or addition to the delivery of signaling to an existing STP Port.

5. Access Ordering (Cont'd)

5.4 Charges Associated with Access Ordering (Cont'd)

5.4.2 Miscellaneous Service Order Charge

A Miscellaneous Service Order Charge, as set forth in Section 17, following, applies to any service, or combination of services, ordered simultaneously from Section 13 of the tariff for which a service order is not already pending (with the exception of Presubscription, Billing Name and Address Service, 900 Blocking Service and Payphone-Specific Coding Digits Service which do not have the charge applied). The Miscellaneous Service Order Charge is an administrative charge designed to compensate for the expenses associated with service order issuance.

The charge always applies to the following services since a pending service order would not exist:

- Overtime Repair (Section 13),
- Standby Repair (Section 13),
- Testing and Maintenance with Other Telephone Companies other than when in conjunction with Acceptance Testing (Section 13),
- Other Labor (Section 13),
- Maintenance of Service (Section 13).

The Miscellaneous Service Order Charge will also apply to the following services if they are ordered subsequent to the initial installation of the associated access service, thereby necessitating the issuance of another service order:

- Telecommunications Service Priority (Section 13),
- Controller Arrangement (Section 13),
- International Blocking Service (Section 13).

5. Access Ordering (Cont'd)

5.4 Charges Associated with Access Ordering (Cont'd)

5.4.2 Miscellaneous Service Order Charge (Cont'd)

The charge does not apply to the following services since there would exist a pending service order:

- Additional Engineering (Section 13),
- Overtime Installation (Section 13),
- Standby Acceptance Testing (Section 13),
- Testing and Maintenance with Other Telephone Companies when in conjunction with Acceptance Testing (Section 13),
- Additional Cooperative Acceptance Testing (Section 13).
- Coin Supervision Additive Service (Section 13).

5.4.3 Access Order Change Charges

Access Order changes involve service date changes and design changes. The customer may request a change of its Access Order prior to the service date. The Telephone Company will make every effort to accommodate a requested change when it is able to do so with the normal work force assigned to complete such an order within normal business hours. If the change cannot be made with the normal work force during normal business hours, the Telephone Company will notify the customer. If the customer still desires the Access Order change, the Telephone Company will schedule a new service date as set forth in 5.1.2 preceding. All charges for Access Order change as set forth in Section 17, following will apply on a per occurrence basis.

Any increase in the number of Special Access Service channels or Switched Access Service lines, trunks, busy hour minutes of capacity or Frame Relay Ports and/or PVCs or CCS/SS7 Port Terminations, or ATM-CDS Ports, Virtual Paths or Virtual Circuit Channels will be treated as a new Access Order (for the increased amount only).

If order changes are necessary to satisfy the transmission performance for a Special Access Service ordered by a customer, these changes

5. Access Ordering (Cont'd)

5.4 Charges Associated with Access Ordering (Cont'd)

5.4.3 Access Order Change Charges (Cont'd)

(A) Service Date Change

The customer may request a change of service date on a pending Access Order prior to the service date. A change of service date is a change of the scheduled service date by the customer to either an earlier date or a later date which does not exceed 30 calendar days from the original service date.

If the Telephone Company determines that the customer's request can be accommodated without delaying the service dates for orders of other customers, the service date will be changed and the Service Date Change Charge as set forth in Section 17 following, will be applied to the order.

If the service date is changed to an earlier date, and the Telephone Company determines additional labor or extraordinary costs are necessary to meet the earlier service date requested by the customer, the customer will be notified by the Telephone Company that Expedited Order Charges as set forth in 5.1.2 preceding apply. Such charges will apply in addition to the Service Date Change Charge.

If the requested service date exceeds 30 calendar days following the original service date, and the Telephone Company determines that the customer's request can be accommodated, the Telephone Company will cancel the original order and apply the Cancellation Charges as set forth in 5.5.3 following. A new Access Order with a new service date will be issued. The Service Date Change Charge will not apply, however, the Access Order Charge will apply to the new order.

If the service date is changed due to a design change as set forth in (B) following, the Service Date Change Charge will apply.

5. Access Ordering (Cont'd)

5.4 Charges Associated with Access Ordering (Cont'd)

5.4.3 Access Order Change Charges (Cont'd)

(B) Design Change

The customer may request a design change to the service ordered prior to the requested service date. A design change is any change to an Access Order which requires engineering review. An engineering review is a review by Telephone Company personnel, of the service ordered and the requested changes to determine what changes in the design, if any, are necessary to meet the changes requested by the customer. Design changes include such things as the addition or deletion of optional features or functions or a change in the type of Transport Termination (Switched Access only), type of channel interface, type of Interface Group or technical specification package, or a change in the destination or speed of Frame Relay Access Service Permanent Virtual Connection or an Asynchronous Transfer Mode Cell Relay Access Service Virtual Path. Design changes do not include a change of customer designated premises, first point of switching, Feature Group type or Special Access Service channel type. Changes of this nature will require the issuance of a new order and the cancellation of the original order with appropriate cancellation charges applied.

The Telephone Company will review the requested change, notify the customer whether the change is a design change, if the change can be accommodated and if a new service date is required. If the customer authorizes the Telephone Company to proceed with the design change, a Design Change Charge as set forth in Section 17, following will apply in addition to the charge for Additional Engineering as set forth in Section 17 following. If a change of service date is required, the Service Date Change Charge as set forth in Section 17 following will also apply. The Access Order Charge as specified in 17.4.1 following does not apply.

5. Access Ordering (Cont'd)

5.5 Minimum Periods and Cancellations

5.5.1 Minimum Periods

The minimum period for part-time Video and Program Audio Special Access Services is one day even though the service will be provided only for the duration of the event specified on the order (e.g., one-half hour, two hours, five hours, etc.).

The minimum period for Switched Access High Capacity DS3 Entrance Facilities and Direct Trunked Transport is as set forth in 6.1.3 following. The minimum period for High Capacity DS1 and DS3 Special Access Services and Synchronous Optical Channel Special Access Services and the Frame Relay Access Service 1.544 Mbps Port is as set forth in 7.2.8 following. The minimum period for Asynchronous Transfer Mode Cell Relay Access Service is set forth in Section 16.2.4 (C), following.

Switched Access usage rated services (i.e., End Office, Common Line, Tandem Switched Transport, and Residual Interconnection Charge) have no minimum period.

The minimum period for which all other Access Service is provided and for which charges are applicable is one month.

5.5.2 Development of Minimum Period Charges

When Access Service is disconnected after commencement of service, but prior to the expiration of the minimum period, charges are applicable for the balance of the minimum period. A disconnect constitutes facilities being returned to available inventory.

The Minimum Period Charge for monthly billed services will be determined as follows:

(A) For Switched Access Service, the charge for a month or fraction thereof is equal to the applicable recurring charges plus any nonrecurring and/or Special Construction charge(s) that may be due.

(B) For Special Access Service, flat rated Switched Access Service, and Public Packet Data Network Service the charge for a month or fraction thereof is the applicable monthly rates for the appropriate channel type plus any optional features, nonrecurring and/or special construction charge(s) that may apply.

(C) The Minimum Period Charge for Digital Subscriber Line Access Service is the applicable monthly rate or fraction thereof plus any nonrecurring charge(s) that may apply.

5. Access Ordering (Cont'd)

5.5 Minimum Period and Cancellations (Cont'd)

5.5.2 Development of Minimum Period Charges (Cont'd)

The Minimum Period Charge for part-time Video and Program Audio Services is the applicable daily rate for the appropriate channel type as set forth in 7.2.4 following.

5.5.3 Cancellation of an Access Order

(A) A customer may cancel an Access Order for the installation of service on any date prior to the service date. The cancellation date is the date the Telephone Company receives written or verbal notice from the customer that the order is to be canceled. The verbal notice must be followed by written confirmation within 10 days. If a customer or a customer's end user is unable to accept Access Service within 30 calendar days after the original service date, the customer has the choice of the following options:

- The Access Order shall be canceled and charges set forth in (B) following will apply or,
- Billing for the service will commence.

In such instances, the cancellation date or the billing date, depending on which option is selected by the customer, shall be the 31st day beyond the original service date of the Access Order.

(B) When a customer cancels an Access Order for the installation of service, a Cancellation Charge will apply as follows:

(1) Installation of Switched Access, Special Access or Public Packet Data Network Service facilities is considered to have started when the Telephone Company incurs any cost in connection therewith or in preparation thereof which would not otherwise have been incurred.

5. Access Ordering (Cont'd)

5.5 Minimum Period and Cancellations (Cont'd)

5.5.3 Cancellation of an Access Order (Cont'd)

(B) (Cont'd)

(2) Where the customer cancels an Access Order prior to the start of installation of access facilities, no charges shall apply.

(3) Where installation of access facilities has been started prior to the cancellation, the charges specified in (a) or (b) following, whichever is lower, shall apply.

(A) A charge equal to the costs incurred in such installation, less estimated net salvage. Such costs include the nonrecoverable cost of equipment and material ordered, provided or used, plus the nonrecoverable cost of installation and removal including the costs of engineering, labor, supervision, transportation, rights-of-way and other associated costs;

(B) The minimum period charges for Switched Access, Special Access, or Public Packet Data Network Service ordered by the customer, as set forth in 5.5.2 preceding.

(C) When a customer cancels an order for the discontinuance of service, no charges apply for the cancellation.

(D) If the Telephone Company misses a service date by more than 30 days and such delay is not requested or caused by the customer (excluding those circumstances where the date is missed due to acts of God, governmental requirements, work stoppages and civil commotions), the customer may cancel the Access Order without incurring cancellation charges.

(E) When a customer cancels an order for the installation of Digital Subscriber Line Access Service, no charges apply for the cancellation.

5.5.4 Partial Cancellation Charge

Any decrease in the number of ordered Special Access Service channels or Switched Access Service lines, trunks, busy hour minutes of capacity or Frame Relay Ports and/or PVCs or CCS/SS7 Port Terminations, or Asynchronous Transfer Mode Cell Relay Access Service Ports, Virtual Paths or Virtual Circuit Channels will be treated as a partial cancellation and charges will be determined as set forth in 5.5.3(B) preceding.

6. Switched Access Service

6.1 General

Switched Access Service, which is available to customers for their use in furnishing their services to end users, provides a two-point communications path between a customer designated premises and an end user's premises. It provides for the use of common terminating, switching, and trunking facilities and for the use of common subscriber plant of the Telephone Company. Switched Access Service provides for the ability to originate calls from an end user's premises to a customer designated premises, and to terminate calls from a customer designated premises to an end user's premises in the LATA where it is provided. Specific references to material describing the elements of Switched Access Service are provided in 6.1.3 and 6.5 through 6.9 following.

Rates and charges for Switched Access Service depend generally on the specific Feature Group ordered by the customer, e.g., for MTS or WATS services or MTS/WATS equivalent services, and whether it is provided in a Telephone Company end office that is equipped to provide equal or non-equal access. Rates and charges for Switched Access Service are set forth in 17.2 following. The application of rates for Switched Access Service is described in 6.4 following. Rates and charges for services other than Switched Access Service, e.g., a customer's interLATA toll message service, may also be applicable when Switched Access Service is used in conjunction with these other services. Descriptions of such applicability are provided in 6.4.5, 6.4.9, 6.5.1(H), 6.5.3, 6.6.1(G), 6.6.2(D), 6.7.1(F) and 6.8.1(E) following. Finally, a credit is applied against line side Switched Access Service charges as described in 6.4.8 following.

Switched Access Service purchased from the provisions of this tariff may be commingled with unbundled network elements, where available, or unbundled network element combinations, where available, purchased pursuant to the Commission's Part 51 Interconnection Rules and in compliance with the Federal Communications Commission's Report and Order and Order on Remand and Further Notice of Proposed Rulemaking in CC Docket Nos. 01-338, 96-98 and 98-147, adopted February 20, 2003 and released August 21, 2003 (FCC 03-36). Unbundled elements and commingling are not available in designated rural CenturyLink Operating companies where a 251 (f) exemption is in effect.

6. Switched Access Service (Cont'd)

6.1 General (Cont'd)

6.1.1 Description and Provision of Switched Access Service Arrangements

(A) Description

Switched Access Service is provided in four different Feature Group arrangements which are service categories of standard and optional features. These are differentiated by their technical characteristics, e.g., line side vs. trunk side connection at the Telephone Company first point of switching. They are also differentiated by optional feature availability and the manner in which the end user accesses them in originating calling, e.g., with or without access codes of various lengths and digits.

The provision of each Feature Group requires Local Transport facilities, including an Entrance Facility where required, and the appropriate End Office functions. In addition, Special Access Service may, at the option of the customer, be connected with Feature Groups A, B, C, or D at Telephone Company designated WATS Serving Offices.

There are three specific transmission specifications (i.e., Types A, B and C) that have been identified for the provision of Feature Groups. The technical specifications for the Entrance Facility and Direct Trunked Transport are the same as those set forth in Section 7 following for Voice Grade and High Capacity services. The specifications provided are dependent on the Interface Group and the routing of the service, i.e., whether the service is routed directly to the end office or via an access tandem. The parameters for the transmission specifications are set forth in 15.1.2 following.

Feature Groups are arranged for either originating, terminating or two-way calling, based on the customer end office switching capacity ordered. Originating calling permits the delivery of calls from Telephone Exchange Service locations to the customer designated premises. Terminating calling permits the delivery of calls from the customer designated premises to Telephone Exchange Service locations. Two-way calling permits the delivery of calls in both directions, but not simultaneously. The Telephone Company will determine the type of calling to be provided unless the customer requests that a different type of directional calling is to be provided. In such cases, the Telephone Company will work cooperatively with the customer to determine the directionality.

There are various optional features associated with Local Transport, Common Switching and Transport Termination available with the Feature Groups. In addition, the Interim NXX Translation optional feature is available with Feature Group C and Feature Group D.

6. Switched Access Service (Cont'd)

6.1 General (Cont'd)

6.1.1 Description and Provision of Switched Access Service Arrangements (Cont'd)

(A) Description (Cont'd)

Detailed descriptions of each of the available Feature Groups are set forth in 6.5 through 6.9 following. Each Feature Group is described in terms of its specific physical characteristics and calling capabilities, the optional features available for use with it and the standard testing capabilities.

The Common Switching and Transport Termination optional features, which are described in 6.10 following, unless specifically stated otherwise, are available at all Telephone Company end office switches.

(B) Manner of Provision

Switched Access is furnished in either quantities of lines or trunks, or in busy hour minutes of capacity (BHMCs). FGA Access and FGB Access are furnished on a per-line or per-trunk basis respectively. FGC Access and FGD Access are furnished on a BHMC and on a per trunk basis as set forth in 5.2 preceding.

BHMCs are differentiated by type and directionality of traffic carried over a Switched Access Service arrangement. Differentiation of traffic among BHMC types is necessary for the Telephone Company to properly design Switched Access Service to meet the traffic carrying capacity requirement of the customer.

There are two major BHMC categories identified as: Originating and Terminating. Originating BHMCs represent access capacity within a LATA for carrying traffic from the end user to the customer and Terminating BHMCs represent access capacity within a LATA for carrying traffic from the customer to the end user. When ordering capacity for FGC Access or FGD Access in BHMCs, the customer must at a minimum specify such access capacity in terms of Originating BHMCs and/or Terminating BHMCs.

6. Switched Access Service (Cont'd)

6.1 General (Cont'd)

6.1.1 Description and Provision of Switched Access Service Arrangements (Cont'd)

(B) Manner of Provision (Cont'd)

Because some customers will wish to further segregate their originating traffic into separate trunk groups, or because segregation may be required by network considerations originating BHMCs are further categorized into Domestic, 700, 800 series, and 900. Domestic BHMCs represent access capacity for carrying only domestic traffic other than 700, 800 series, and 900 traffic. 700, 800 series, and 900 BHMCs represent access capacity for carrying, respectively, only 700, 800 series and 900 traffic. When ordering such types of access capacity, the customer must specify Domestic, 700, 800 series or 900 BHMCs.

6.1.2 Ordering Options and Conditions

Switched Access Service is ordered under the Access Order provisions set forth in 5.2 preceding. Also, included in that section are regulations concerning miscellaneous service order charges which may be associated with Switched Access Service ordering (e.g., Service Date Changes, Cancellations, etc.).

6.1.3 Rate Categories

There are four rate categories which apply to Switched Access Service:

- Local Transport (described in 6.1.3(A) following)
- End Office (described in 6.1.3(B) following)
- Chargeable Optional Features (described in 6.1.3(C) following)
- Common Line (described in Section 3. preceding)

6. Switched Access Service (Cont'd)

6.1 General (Cont'd)

6.1.3 Rate Categories (Cont'd)

The following diagram depicts a generic view of the components of Switched Access Service and the manner in which the components are combined to provide a complete Access Service.

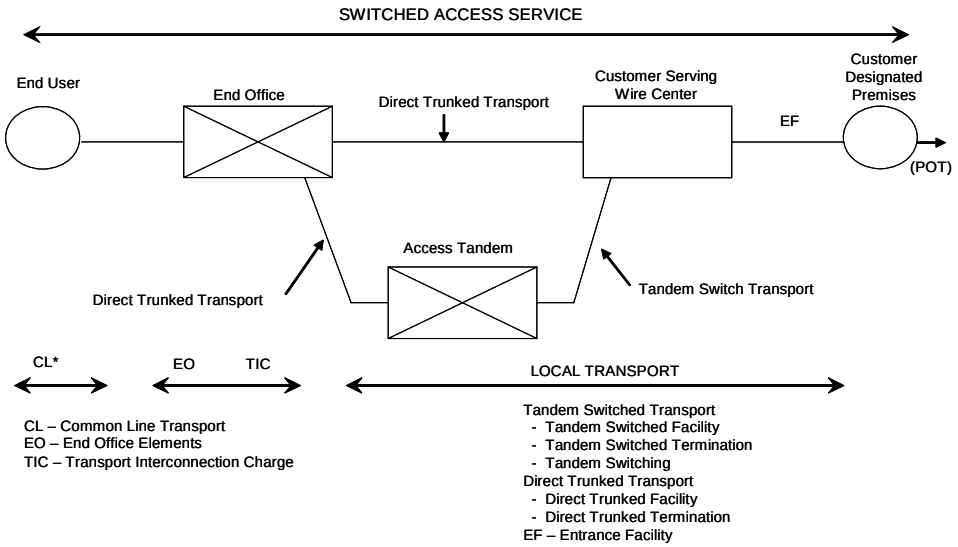

* Common Line Access Service is provided under Section 3 preceding

6. Switched Access Service (Cont'd)

6.1 General (Cont'd)

6.1.3 Rate Categories (Cont'd)

(A) Local Transport

The Local Transport rate category establishes the charges related to the transmission and tandem switching facilities between the customer designated premises and the end office switch(es), which may be a Remote Switching Module(s) or WATS Serving Office, where the customer's traffic is switched to originate or terminate the customer's communications. Mileage measurement rules are set forth in 6.4.6 following and in this section.

Local Transport is a two-way voice frequency transmission path composed of facilities determined by the Telephone Company. The two-way voice frequency transmission path permits the transport of calls in the originating direction (from the end user end office switch to the customer designated premises) and in the terminating direction (from the customer designated premises to the end office switch), but not simultaneously. The voice frequency transmission path may be comprised of any form or configuration of plant capable of and typically used in the telecommunications industry for the transmission of voice and associated telephone signals within the frequency bandwidth of approximately 300 to 3000 Hz. The customer must specify the choice of facilities (i.e., Voice Grade 2 or 4 wire or High Capacity DS1 or DS3) to be used in the provision of the Direct Trunked Transport or Entrance Facility.

The customer must specify when ordering (1) whether the service is to be directly routed to an end office switch or through an access tandem switch, (2) the type of Direct Trunked Transport and whether it will overflow to Tandem Switched Transport when service is directly routed to an end office, (3) the type of Entrance Facility, (4) the directionality of the service, and (5) when multiplexing is required, the hub(s) at which the multiplexing will be provided.

When the customer has both Tandem Switched Transport and Direct Trunked Transport at the same end office, the customer will be provided Alternate Traffic Routing as set forth in 6.4.6 following.

6. Switched Access Service (Cont'd)

6.1 General (Cont'd)

6.1.3 Rate Categories (Cont'd)

(A) Local Transport (Cont'd)

Direct Trunked Transport is available at all tandems and at all end offices except those end offices identified in National Exchange Carrier Association, Inc. Tariff F.C.C. No. 4. as not having the capability to provide Direct Trunked Transport. Direct Trunked Transport is not available: (1) from end offices that provide equal access through a Centralized Equal Access arrangement, or (2) from end offices that lack recording or measurement capability.

Normally, Direct Trunked Transport of originating 800 series calls from an end office is available only from Service Switching Point (SSP) equipped end offices. However, certain SSP equipped end offices cannot accommodate the direct trunking of the 888 service access code. These end offices are identified in National Exchange Carrier Association, Inc. Tariff F.C.C. No. 4. Additionally, certain non-SSP equipped end offices can accommodate direct trunking of originating 800 series calls. These end offices are also identified in National Exchange Carrier Association, Inc. Tariff F.C.C. No. 4.

Unless otherwise ordered by the F.C.C., where the Telephone Company elects to provide equal access through a Centralized Equal Access arrangement, the Telephone Company will designate the serving wire center (SWC). The designated SWC will normally be that wire center which provides dial tone to the telephone company Centralized Equal Access tandem office identified in National Exchange Carrier Association, Inc. Tariff F.C.C. No. 4. When service is provided in cooperation with a non telephone company provider of Centralized Equal Access, the SWC will be that wire center which would normally provide dial tone to the telephone company point of interconnection with the non telephone company provider of Centralized Equal Access specified in the tariff of the Centralized Equal Access provider. Those Telephone Company offices providing equal access through centralized arrangements are identified in National Exchange Carrier Association, Inc. Tariff F.C.C. No. 4.

6. Switched Access Service (Cont'd)

6.1 General (Cont'd)

6.1.3 Rate Categories (Cont'd)

(A) Local Transport (Cont'd)

Local Transport is provided at the rates and charges set forth in Section 17 following. The application of these rates with respect to individual Feature Groups is as set forth in 6.4.1(C) following. When more than one Telephone Company is involved in providing the Switched Access Service, the Local Transport rates are applied as set forth in 2.4.7 preceding.

The Local Transport Rate Category includes five classifications of rate elements: (1) Entrance Facility, (2) Direct Trunked Transport, (3) Tandem Switched Transport, (4) Residual Interconnection Charge, and (5) Multiplexing.

(1) Entrance Facility

The Entrance Facility recovers a portion of the costs associated with a communications path between a customer designated premises and the serving wire center of that premises. Included as part of the Entrance Facility is a standard channel interface arrangement which defines the technical characteristics associated with the type of facilities to which the access service is to be connected at the customer designated premises and the type of signaling capability, if any.

Three types of Entrance Facility are available: (1) Voice Grade 2 or 4 wire (an analog channel with an approximate bandwidth of 300 to 3000 Hz), (2) High Capacity DS1 (an isochronous serial digital channel with a rate of 1.544 Mbps) and (3) High Capacity DS3 (an isochronous serial digital channel with a rate of 44.736 Mbps). The minimum period for which a DS3 Entrance Facility is provided is twelve months.

One charge applies for each Entrance Facility that is terminated at a customer designated premises. This charge specified in Section 17 following will apply even if the customer designated premises and the serving wire center are collocated in a Telephone Company building.

A customer's Local Transport may be connected to the Entrance Facility of another customer, providing the other customer submits a Letter of Authorization for this connection and assumes full responsibility for the cost of the Entrance Facility.

6. Switched Access Service (Cont'd)

6.1 General (Cont'd)

6.1.3 Rate Categories (Cont'd)

(A) Local Transport (Cont'd)

(2) Direct Trunked Transport

The Direct Trunked Transport rate elements recover a portion of the cost associated with a communications path between a serving wire center and an end office or serving wire center and a tandem on circuits dedicated to the use of a single customer.

Direct Trunked Transport is available to all tandems and to all end offices except those end offices identified in National Exchange Carrier Association, Inc. Tariff F.C.C. No. 4, Wire Center Information as not having the capability to provide Direct Trunked Transport.

Direct Trunked Transport is not available: (1) from end offices that provide equal access through a Centralized Equal Access arrangement, or (2) from end offices that lack recording or measurement capability.

Normally, Direct Trunked Transport of originating 800 series calls from an end office is available only from Service Switching Point (SSP) equipped end offices. However, certain SSP equipped end offices cannot accommodate the direct trunking of the 888 service access code. These end offices are identified in National Exchange Carrier Association, Inc. Tariff F.C.C. No. 4. Additionally, certain non-SSP equipped end offices can accommodate direct trunking of originating 800 series calls. These end offices are also identified in National Exchange Carrier Association, Inc. Tariff F.C.C. No. 4.

Three types of Direct Trunked Transport are available: (1) Voice Grade (an analog channel with an approximate bandwidth of 300 to 3000 Hz), (2) High Capacity DS1 (an isochronous serial digital channel with a rate of 1.544 Mbps), and (3) High Capacity DS3 (an isochronous serial digital channel with a rate of 44.736 Mbps). The minimum period for which a High Capacity DS3 Direct Trunked Transport is provided is twelve months.

High Capacity DS3 Direct Trunked Transport can not be terminated at end offices that are not identified as hub offices that provide

6. Switched Access Service (Cont'd)

6.1 General (Cont'd)

6.1.3 Rate Categories (Cont'd)

(A) Local Transport (Cont'd)

(2) Direct Trunked Transport (Cont'd)

Additionally, DS1 Direct Trunked Transport can not be terminated at end offices that are not identified as hub offices that provide DS1 to Voice Grade multiplexing or are not electronic end offices. Offices that provide multiplexing are identified in National Exchange Carrier Association, Inc. Tariff F.C.C. No. 4, Wire Center Information.

Direct Trunked Transport rates consist of a Direct Trunked Facility rate specified in Section 17 following which is applied on a per mile basis and a Direct Trunked Termination rate which is applied at each end of each measured segment of the Direct Trunked Facility (e.g., at the end office, hub, tandem, and serving wire center). When the Direct Trunked Facility mileage is zero, neither the Direct Trunked Facility rate nor the Direct Trunked Termination rate will apply.

The Direct Trunked Facility rate recovers a portion of the costs of transmission facilities, including intermediate transmission circuit equipment, between the end points of the interoffice circuits.

The Direct Trunked Termination rate specified in Section 17 following recovers a portion of the costs of the circuit equipment that is necessary for the termination of each end of the Direct Trunked Facility.

6. Switched Access Service (Cont'd)

6.1 General (Cont'd)

6.1.3 Rate Categories (Cont'd)

(A) Local Transport (Cont'd)

(3) Tandem Switched Transport (Cont'd)

The Tandem Switched Transport rate elements recover a portion of the costs associated with a communications path between a tandem and an end office on circuits that are switched at a tandem switch.

Tandem Switched Transport rates consist of a Tandem Switching rate, a Tandem Switched Facility rate, and a Tandem Switched Termination rate.

In those instances where an SSP equipped end office is capable of handling 800 traffic on a direct trunked basis but incapable of handling 888 traffic on a direct trunked basis, a full credit will be provided for tandem switched transport charges associated with FGC and FGD service for 888 traffic delivered at the tandem. This results in all 800 series traffic being rated as direct trunked transport regardless of whether the SSP equipped end office is capable of handling 888 traffic on a direct trunked basis. Those SSP equipped end offices that cannot accommodate direct trunking of originating 888 traffic are identified in National Exchange Carrier Association, Inc. Tariff F.C.C. No. 4, Wire Center Information.

(a) The Tandem Switching rate recovers a portion of the costs of switching traffic through an access tandem. The Tandem Switching rate specified in Section 17 following is applied on a per access minute per tandem basis for all originating and all terminating minutes of use switched at the tandem. Tandem locations are identified in National Exchange Carrier Association, Inc. Tariff F.C.C. No. 4, Wire Center Information.

(b) The Tandem Switched Facility rate recovers a portion of the costs of transmission facilities, including intermediate transmission circuit equipment, between the end points of interoffice circuits. The Tandem Switched Facility rate specified in Section 17 following is applied on a per access minute per mile basis for all originating and terminating minutes of use routed over the facility.

6. Switched Access Service (Cont'd)

6.1 General (Cont'd)

6.1.3 Rate Categories (Cont'd)

(A) Local Transport (Cont'd)

(3) Tandem Switched Transport (Cont'd)

(c) The Tandem Switched Termination rate recovers a portion of the costs of circuit equipment necessary for the termination of each end of each measured segment of the Tandem Switched Facility. The Tandem Switched Termination rate specified in Section 17 following is applied on a per access minute basis (for all originating and terminating minutes of use routed over the facility) at each end of each measured segment of Tandem Switched Facility (e.g., at the end office, Feature Group A dial tone office, host office and tandem). When the Tandem Switched Facility mileage is zero, neither the Tandem Switched Facility rate nor the Tandem Switched Termination rate will apply.

6. Switched Access Service (Cont'd)

6.1 General (Cont'd)

6.1.3 Rate Categories (Cont'd)

(A) Local Transport (Cont'd)

(4) Residual Interconnection Charge

The Residual Interconnection Charge recovers the costs associated with Local Transport that are not recovered by the Entrance Facility, Direct Trunked Transport, Tandem Switched Transport, Multiplexing, or dedicated signaling (i.e., SS7) rates. The Residual Interconnection Charge specified in Section 17 following applies to both Tandem Switched and Direct Trunked access minutes of use.

The Residual Interconnection Charge does not apply when the Telephone Company has identified in National Exchange Carrier Association, Inc. Tariff F.C.C. No. 4, Wire Center Information that it has not received a bona fide request for Direct Trunked Transport and is therefore applying Local Transport Facility and Local Transport Termination rates and charges instead of Tandem Switched Facility, Tandem Switched Termination, and Tandem Switching rates and charges.

(5) Multiplexing

DS3 to DS1 Multiplexing charges specified in Section 17 following apply when a High Capacity DS3 Entrance Facility or High Capacity DS3 Direct Trunked Facility is connected with High Capacity DS1 Direct Trunked Transport. The DS3 to DS1 multiplexer will convert a 44.736 Mbps channel to 28 DS1 channels using digital time division multiplexing.

DS1 to Voice Grade Multiplexing charges apply when a High Capacity DS1 Entrance Facility or High Capacity DS1 Direct Trunked Facility is connected with Voice Grade Direct Trunked Transport. However, a DS1 to Voice Grade Multiplexing charge does not apply when a High Capacity DS1 Entrance Facility or High Capacity DS1 Direct Trunked Transport is terminated at an electronic end office and only Switched Access Service is provided over the DS1 facility (i.e., Voice Grade Special Access channels are not derived). The DS1 to Voice Grade multiplexer will convert a 1.544 Mbps channel to 24 Voice Grade channels.

Multiplexing is only available at wire centers identified in National Exchange Carrier Association, Inc. Tariff F.C.C. No. 4, Wire Center Information.

6. Switched Access Service (Cont'd)

6.1 General (Cont'd)

6.1.3 Rate Categories (Cont'd)

(A) Local Transport (Cont'd)

(6) Interface Groups

Ten Interface Groups are provided for terminating the Entrance Facility at the customer's designated premises. Technical specifications concerning the available interface groups are set forth in 15.1 following.

(7) Nonchargeable Optional Features

Where transmission facilities permit, the individual transmission path between the customer's designated premises and the first point of switching, may at the option of the customer, be provided with the following optional features as set forth and described in 15.1.1(E) following.

- Supervisory Signaling
- Customer Specified Entry Switch Receive Level
- Customer Specification of Local Transport Termination
- 64 Clear Channel Capability

When a customer subscribes to Common Channel Signaling (SS7) Network Connection Service (CCSNC Service), the following optional features are made available and are described in 6.10.1 following.

- Signaling System 7 (SS7) Signaling
- Calling Party Number
- Carrier Selection Parameter
- Charge Number Parameter

6. Switched Access Service (Cont'd)

6.1 General (Cont'd)

6.1.3 Rate Categories (Cont'd)

(A) Local Transport (Cont'd)

(8) Chargeable Optional Features

Common Channel Signaling, Signaling System 7 (CCS/SS7) Network Connection (CCSNC) Service provides a signaling path between a customer's designated Signaling Point of Interface (SPOI) and a Telephone Company's Signaling Transfer Point (STP). CCSNC is provided as set forth in 6.10.5 following.

800 Data Base Access Service is provided to all customers in conjunction with FGC and FGD switched access service. A Basic or Vertical Feature Query charge, as set forth in Section 17 following, is assessed for each completed query returned from the 800 data base whether or not the actual call is delivered to the customer The query is considered completed when the appropriate call routing information is returned to the Service Switching Point (SSP) that launched the query. The Basic Query provides the identification of the customer to whom the call will be delivered and includes area of service routing which allows routing of 800 series calls by telephone companies to different interexchange carriers based on the Local Access Transport Area (LATA) in which the call originates. The Vertical Feature Query provides this same customer identification function in addition to vertical features which may include: (1) call validation (ensuring that calls originate from subscribed service areas); (2) POTS translation of 800 series numbers (which is generally necessary for the routing of 800 series calls); (3) alternate POTS translation (which allows subscribers to vary the routing of 800 series calls based on factors such as time of day, place of origination of the call, etc.); and (4) multiple carrier routing (which allows subscribers to route to different carriers based on factors similar to those in (3)).

(B) End Office

The End Office rate category establishes the charges related to the local end office switching and end user termination functions necessary to complete the transmission of Switched Access communications to and from the end users served by the local end office. The End Office rate category includes the Local Switching and Information Surcharge rate elements.

6. Switched Access Service (Cont'd)

6.1 General (Cont'd)

6.1.3 Rate Categories (Cont'd)

(B) End Office (Cont'd)

(1) Local Switching

The Local Switching rate element establishes the charges related to the use of end office switching equipment, the terminations in the end office of end user lines, and the terminations of calls at Telephone Company Intercept Operators or recordings. The premium charge is divided into two distinct categories, i.e., Local Switching 1 and Local Switching 2. The first category, Local Switching 1, is applicable to Feature Groups A and B.. Local Switching 1 does not apply to:

- Feature Groups A and B when utilized to provide MTS/WATS service, and

- Feature Groups A and B used for terminating inward WATS and WATS-type service at an equal access WATS Serving Office.

The second category, Local Switching 2, is applicable to:

- Feature Groups C and D, and

- Feature Groups A and B when utilized to provide MTS/WATS service.

- Feature Groups A and B used for terminating inward WATS and WATS-type service at an equal access WATS Serving Office.

Local Switching does not apply to Feature Groups B and D Switched Access Services associated with Wireless Switching Center (WSCs) directly interconnected to a Telephone Company access tandem office.

Where end offices are appropriately equipped, international dialing may be provided as a capability associated with Local Switching 2 which provides local dial switching for Feature Groups C and D. International dialing provides the capability of switching international calls with service prefix and address codes having more digits than are capable of being switched through a standard FGC or FGD equipped end office.

6. Switched Access Service (Cont'd)

6.1 General (Cont'd)

6.1.3 Rate Categories (Cont'd)

(B) End Office (Cont'd)

(1) Local Switching (Cont'd)

Rates for Local Switching 1 and Local Switching 2 are set forth in 17.2.3 following. The application of these rates with respect to individual Feature Groups is as set forth in 6.4.1(C) following.

There are four types of functions included in the Local Switching rate element: Common Switching, Transport Termination, Line Termination and Intercept. These are described in (a) through (d) following.

(a) Common Switching

Common Switching provides the local end office switching functions associated with the various access (i.e., Feature Group) switching arrangements. The Common Switching arrangements provided for the various Feature Group arrangements are described in 6.5 through 6.9 following.

Included as part of Common Switching are various nonchargeable optional features which the customer can order to meet the customer's specific communications requirements. These optional features are described in 6.10.1 following.

(b) Transport Termination

Transport Termination functions provide for the line or trunk side arrangements which terminate the Local Transport facilities. Included as part of these functions are various nonchargeable optional termination arrangements. These optional terminating arrangements are described in 6.10.2 following.

The number of Transport Terminations provided will be determined by the Telephone Company as set forth in 6.2.5 following.

6. Switched Access Service (Cont'd)

6.1 General (Cont'd)

6.1.3 Rate Categories (Cont'd)

(B) End Office (Cont'd)

(1) Local Switching (Cont'd)

(c) Line Termination

Line Termination provides for the terminations of end user lines in the local end office. There are two types of Line Terminations, i.e., Common Line Terminations and Special Access Service Terminations utilized in the provision of WATS or WATS-type services at Telephone Company designated WATS Serving Offices.

The above Special Access Service Terminations are differentiated by line side vs. trunk side terminations. In addition, there are various types of originating and terminating line side terminations depending on the type of signaling associated with the Special Access Service. Line side terminations are available with either dial pulse or dual tone multifrequency address signaling.

(d) Intercept

The Intercept function provides for the termination of a call at a Telephone Company Intercept operator or recording. The operator or recording tells a caller why a call, as dialed, could not be completed, and if possible, provides the correct number.

(2) Information Surcharge

Information Surcharge rates are assessed to a customer based on the total number of access minutes. Information Surcharge rates are as set forth in Section 17 following. The application of these rates with respect to individual Feature Groups is as set forth in 6.4.1(C) following.

The Information Surcharge does not apply to Feature Groups B and D Switched Access Services associated with Wireless Switching Centers (WSCs) directly interconnected to a Telephone Company access tandem office.

The number of end office switching transmission paths will be determined as set forth in 6.2.5 following.

6. Switched Access Service (Cont')

6.1 General (Cont'd)

6.1.3 Rate Categories (Cont'd)

(C) Chargeable Optional Features

Where facilities permit, the Telephone Company will, at the option of the customer, provide the following chargeable optional features.

(1) Interim NXX Translation

The Interim NXX Translation rate element provides for customer identification of non-data base services when calls are directed by end users in the 1+SAC+NXX-XXXX (e.g., 1+900+NXX-XXXX) format. The NXX codes are assigned to specific customers in conformance with the North American Numbering Plan (NANP). NXX code assignment(s) will be made by the Bellcore NANP Coordinator. The Telephone Company will use the NXX code to identify the customer to whose point of termination the traffic is to be delivered, (i.e., at appropriately equipped electronic end offices, access tandems or through contracted arrangements with other parties.) It is then the responsibility of the customer to do any further translation the customer deems necessary to route the call. Customer assigned NXX codes which have not been ordered will be blocked.

(2) 800 Data Base Access Service

800 Data Base Access Service is provided to all customers in conjunction with FGC and FGD switched access service. When a 1+800 series+NXX-XXXX call is originated by an end user, the Telephone Company will utilize the Signaling System 7 (SS7) network to query an 800 data base to identify the customer to whom the call will be delivered and provide vertical features based on the dialed ten digits. The call will then be routed to the identified customer over FGC or FGD switched access. The 800 series includes the following service access codes: 800, 888, 877, 866, 855, 844, 833 and 822.

6. Switched Access Service (Cont')

6.1 General (Cont'd)

6.1.3 Rate Categories (Cont'd)

(C) Chargeable Optional Features (Cont'd)

(2) 800 Data Base Access Service (Cont'd)

A Basic or Vertical Feature Query charge, as set forth in 17.2.2(B) following, is assessed for each query launched to the data base which identifies the customer to whom the call will be delivered. The Basic Query provides the identification of the customer to whom the call will be delivered and includes area of service routing which allows routing of 800 series calls by telephone companies to different interexchange carriers based on the Local Access Transport Area (LATA) in which the call originates. The Vertical Feature Query provides the same customer identification as the basic query and vertical features which may include: (1) call validation, (ensuring that calls originate from subscribed service areas); (2) POTS translation of 800 series numbers; (3) alternate POTS translation (which allows subscribers to vary the routing of 800 series calls based on factors such as time of day, place or origination of the call, etc.); and (4) multiple carrier routing (which allows subscribers to route to different carriers based on factors similar to those in (3)).

6. Switched Access Service (Cont'd)

6.1 General (Cont'd)

6.1.4 Special Facilities Routing

Any customer may request that the facilities used to provide Switched Access Service be specially routed. The regulations for Special Facilities Routing (i.e., Avoidance, Diversity and Cable-Only) are set forth in Section 11. following.

6.1.5 Design Layout Report

At the request of the customer, the Telephone Company will provide to the customer the makeup of the facilities and services provided from the customer's premises to the first point of switching. This information will be provided in the form of a Design Layout Report. The Design Layout Report will be provided to the customer at no charge, and will be reissued or updated whenever these facilities are materially changed.

6.2 Undertaking of the Telephone Company

In addition to the obligations of the Telephone Company set forth in Section 2. preceding, the Telephone Company has certain other obligations concerning only the provision of Switched Access Service. These obligations are as follows:

6.2.1 Network Management

The Telephone Company will administer its network to insure the provision of acceptable service levels to all telecommunications users of the Telephone Company's network services. Generally, service levels are considered acceptable only when both end users and customers are able to establish connections with little or no delay encountered within the Telephone Company network. The Telephone Company maintains the right to apply protective controls, i.e., those actions, such as call gapping, which selectively cancel the completion of traffic, over any traffic carried over its network, including that associated with a customer's Switched Access Service. Generally, such protective measures would only be taken as a result of occurrences such as failure or overload of Telephone Company or customer facilities, natural disasters, mass calling or national security demands. In the event that the protective controls applied by the Telephone Company result in the complete loss of service by the customer, the customer will be granted a Credit Allowance for Service Interruption as set forth in 2.4.4(B)(3) preceding.

6. Switched Access Service (Cont'd)

6.2 Undertaking of the Telephone Company (Cont'd)

6.2.2 Transmission Specifications

Each Switched Access Service transmission path is provided with standard transmission specifications. There are three different standard specifications (Types A, B and C). The standard for a particular transmission path is dependent on the Feature Group, the Interface Group and whether the service is directly routed or via an access tandem. The available transmission specifications are set forth in 15.1.2 following. Data Transmission Parameters are also provided with each Switched Access Service transmission path. The Telephone Company will, upon notification by the customer that the data parameters set forth in 15.1.3 following are not being met, conduct tests independently or in cooperation with the customer, and take any necessary action to insure that the data parameters are met.

The Telephone Company will maintain existing transmission specifications on functioning service configurations installed prior to May 25, 1984, except that service configurations having performance specifications exceeding the standards set forth in 15.1.2 following will be maintained at the performance levels specified.

The transmission specifications concerning Switched Access Service are limits which, when exceeded, may require the immediate corrective action of the Telephone Company. The transmission specifications are set forth in 15.1.2 following. Acceptance limits are set forth in Technical Reference GR-334-CORE. This Technical Reference also provides the basis for determining Switched Access Service maintenance limits.

6. Switched Access Service (Cont'd)

6.2 Undertaking of the Telephone Company (Cont'd)

6.2.3 Provision of Service Performance Data

Subject to availability, end-to-end service performance data available to the Telephone Company through its own service evaluation routines, may also be made available to the customer based on previously arranged intervals and format. These data provide information on overall end-to-end call completion and non-completion performance, e.g., customer equipment blockage, failure results and transmission performance. These data do not include service performance data which are provided under other tariff sections, e.g., testing service results. If data are to be provided in other than paper format, the charges for such exchange will be determined on an individual case basis.

6.2.4 Testing

(A) Acceptance Testing

At no additional charge the Telephone Company will, at the customer's request, cooperatively test at the time of installation, the following parameters: loss, C-notched noise, C-message noise, 3-tone slope, d.c. continuity and operational signaling. When the Local Transport is provided with Interface Groups 2 through 10, and the Transport Termination is two-wire (i.e., there is a four-wire to two-wire conversion in Local Transport), balance parameters (equal level echo path loss) may also be tested.

(B) Routine Testing

At no additional charge, the Telephone Company will, at the customer's request, test after installation on an automatic or manual basis, 1004 Hz loss, C-message noise and Balance (Improved Return loss).

In the case of automatic testing, the customer shall provide remote office test lines and 105 test lines with associated responders or their functional equivalent.

The frequency of these tests will be that which is mutually agreed upon by the customer and the Telephone Company, but shall consist of not less than quarterly 1004 Hz Loss and C-message noise tests and an annual Balance test. Trunk test failures requiring customer participation for trouble resolution will be provided to the customer on an as-occurs basis.

Additional tests may be ordered as set forth in 13.3.1 following. Charges for these additional tests are set forth in Section 17 following.

6. Switched Access Service (Cont'd)

6.2 Undertaking of the Telephone Company (Cont'd)

6.2.5 Determination of Number of Transmission Paths

For Feature Groups A and B, which are ordered on a per line or per trunk basis respectively, and Feature Groups C and D when ordered on a per trunk basis the customer specifies the type of transport facilities and the number of channels in the order for service.

For Tandem Switched Transport, the Telephone Company will determine the number of Switched Access Service transmission paths to be provided for the Switched Access Feature Group C and D busy hour minutes of capacity ordered. The number of transmission paths will be developed using the total busy hour minutes of capacity by type (as described in 6.1.1(B) preceding) for the end offices for each Feature Group ordered from a customer's designated premises. The total busy hour minutes of capacity by type (e.g., originating, terminating) for the end office will be converted to transmission paths using standard Telephone Company traffic engineering methods. The number of transmission paths provided shall be the number required based on (1) the use of access tandem switches and end office switches, (2) the use of the end office switches only, or (3) the use of the tandem switches only.

6.2.6 Trunk Group Measurement Reports

Subject to availability, the Telephone Company will make available trunk group data in the form of usage in CCS, peg count and overflow, to the customer based on previously agreed to intervals.

6. Switched Access Service (Cont'd)

6.2 Undertaking of the Telephone Company (Cont'd)

6.2.7 Common Channel Signaling System 7 Access Service

(A) Description

Common Channel Signaling System 7 (CCS7) Access service provides an interconnection between the Common Channel Signaling (CCS) network of the Telephone Company and a customer's CCS network or SS7 capable voice/data network using Dedicated Switched Access facilities and Signal Transfer Point (STP) Ports. CCS7 Access service provides the connection between the Telephone Company's STP and the customer's premises to allow customers to access Telephone Company provided services requiring CCS7 connectivity. CCS7 Access service provides for the transmission of network control and other signaling information from the Telephone Company's STP, via the STP Port and Dedicated Switched Access facilities, to the customer's premises. The technical interface specifications are as described in Bellcore Technical Reference Publication TR-TSV-000905. The location of the Telephone Company's STP switches are indicated in (D) following and in NECA Tariff FCC No. 4.

CCS7 Access Service may interconnect a customer's paired STPs to the Telephone Company's mated STP pairs. With this arrangement, the customer is connected to two STPs and four STP Ports via four Dedicated Switched Access facilities. The following diagram depicts a generic view of this arrangement.

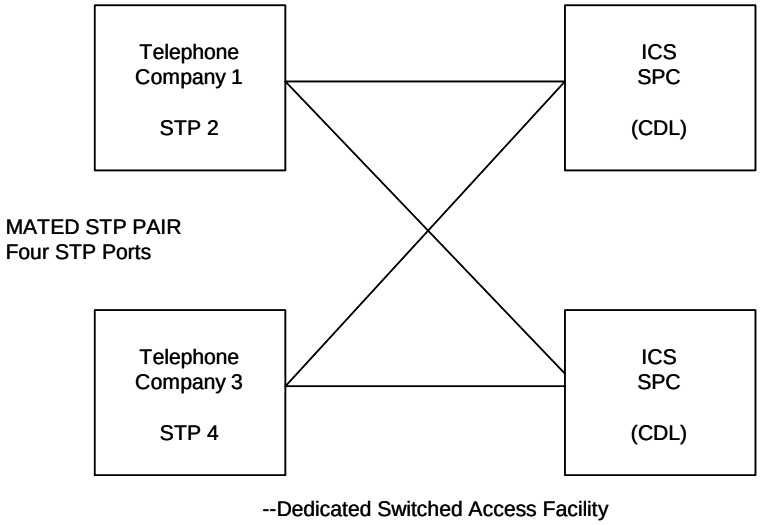

6. Switched Access Service (Cont'd)

6.2 Undertaking of the Telephone Company (Cont'd)

6.2.7 Common Channel Signaling System 7 Access Service (Cont'd)

(A) Description (Cont'd)

CCS7 Access service may also interconnect a Customer Signaling Point or Service Switching Point to the mated STP pairs at the locations specified. With this arrangement, the customer is connected to two STPs and two STP Ports via two Dedicated Switched Access facilities.

The following diagram depicts a generic view of this arrangement.

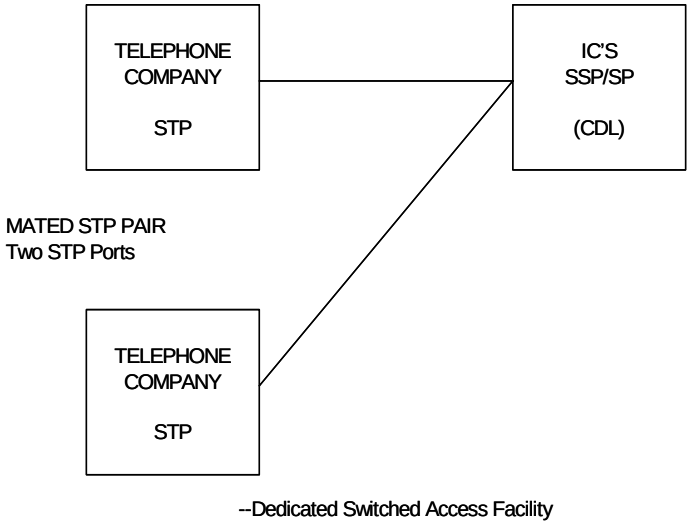

(B) Dedicated Switched Access

Dedicated Switched Access provides a dedicated transmission path to connect a customer's premises to the Telephone Company's Signal Transfer Point (STP). This service is provided in 56 Kbps digital or DS1 formats only. The 56 Kbps format provides connection to one port at the STP and the DS1 format provides an equivalence of 24, 56 Kbps facilities for connection of up to 24 ports at the STP. Dedicated Switched Access has two rate elements: Dedicated Switched Access Line (DSAL) and Dedicated Switched Access Transport (DSAT).

6. Switched Access Service (Cont'd)

6.2 Undertaking of the Telephone Company (Cont'd)

6.2.7 Common Channel Signaling System 7 Access Service (Cont'd)

(B) Dedicated Switched Access (Cont'd)

(1) The DSAL rate element provides the transmission path between a customer's premises and its serving wire center. A 56 Kbps or DS1 interface is provided at the customer's premises as part of the DSAL. The 56 Kbps interface provides for the simultaneous two-way transmission of sequential bipolar data signals at a transmission speed of 56 Kbps over four-wire facilities. The DS1 interface provides for the simultaneous two-way transmission of sequential data signals at a transmission speed of 1.544 Mbps. This rate element is not distance nor usage sensitive.

(2) The DSAT rate element provides the transmission path between the serving wire center of the customer's premises and the STP. This rate element is distance sensitive on a per airline mile basis, but is not usage sensitive. Where the serving wire center of the customer's premises and the STP location are the same, the DSAT rate element does not apply. Airline miles will be calculated using the V&H coordinates method outlined in NECA Tariff FCC No. 4 between the customer's serving wire center and the STP.

(C) STP Port Termination

The STP Port Termination provides the means to terminate the Dedicated Switched Access facility at the STP. One STP Port Termination is required for each 56 Kbps or 56 Kbps equivalent facility.

6. Switched Access Service (Cont'd)

6.3 Obligations of the Customer

In addition to the obligations of the customer set forth in Section 2. preceding, the customer has certain specific obligations pertaining to the use of Switched Access Service. These obligations are as follows:

6.3.1 Report Requirements

Customers are responsible for providing the following reports to the Telephone Company, when applicable.

(A) Jurisdictional Reports

When a customer orders Switched Access Service for both interstate and intrastate use, the customer is responsible for providing reports as set forth in 2.3.11 preceding. Charges will be apportioned in accordance with those reports. The method to be used for determining the interstate charges is set forth in 2.3.12 preceding.

(B) Code Screening Reports

When a customer orders service class routing, trunk access limitation or call gapping arrangements, it must report the number of trunks and/or the appropriate codes to be instituted in each end office or access tandem switch, for each of the arrangements ordered.

6.3.2 Trunk Group Measurement Reports

With the agreement of the customer, trunk group data in the form of usage in CCS, peg count and overflow for its end of all access trunk groups, where technologically feasible, will be made available to the Telephone Company. These data will be used to monitor trunk group utilization and service performance and will be based on previously arranged intervals and format.

6.3.3 Supervisory Signaling

The customer's facilities shall provide the necessary on-hook, off-hook, answer and disconnect supervision.

6. Switched Access Service (Cont'd)

6.3 Obligations of the Customer (Cont'd)

6.3.4 Short Duration Mass Calling Requirements

When a customer offers service for which a substantial call volume is expected during a short period of time (e.g., 900 service media stimulated events), the customer must notify the Telephone Company at least 48 hours in advance of each peak period. Notification should include the nature, time, duration, and frequency of the event, an estimated call volume, and the telephone number(s) to be used.

On the basis of the information provided, the telephone Company may invoke network management controls, (e.g., call gapping and code blocking) to reduce the probability of excessive network congestion. The Telephone Company will work cooperatively with the customer to determine the appropriate level of such control.

6. Switched Access Service (Cont'd)

6.4 Rate Regulations

This section contains the specific regulations governing the rates and charges that apply for Switched Access Service.

6.4.1 Description and Application of Rates and Charges

There are two types of rates and charges that apply to Switched Access Service; recurring (usage and flat rates) and nonrecurring charges. These rates and charges are applied differently to the various rate elements as set forth in (C) following.

(A) Recurring Rates

(1) Usage Rates for Switched Access Service are rates that apply on a per access minute or a per call basis. Access minute charges and per call charges are accumulated over a monthly period.

(2) Flat Rates for Switched Access Service are rates that apply on a per month per rate element basis.

(B) Nonrecurring Charges

Nonrecurring charges are one-time charges that apply for a specific work activity (i.e., installation or change to an existing service). The types of nonrecurring charges that apply for Switched Access Service are: installation of service, Interim NXX Translation optional feature and service rearrangements. These charges with the exception of the Interim NXX Translation optional feature are in addition to the Access Order Charge as specified in Section 17 following.

(1) Installation of Service

When the Telephone Company has identified in NECA Tariff F.C.C. No. 4, Wire Center Information that it has not received a bona fide request for Direct Trunked Transport, a nonrecurring Installation per Line or Trunk Charge as set forth in Section 17 following applies to each Switched Access Service installed. For FGA, which is ordered on a per line basis, and for FGB, FGC and FGD, which is ordered on a per trunk

6. Switched Access Service (Cont'd)

6.4 Rate Regulations (Cont'd)

6.4.1 Description and Application of Rates and Charges (Cont'd)

(B) Nonrecurring Charges (Cont'd)

(1) Installation of Service (Cont'd)

basis, the charge is applied on a per line or trunk basis respectively. For FGC and FGD, which are ordered on a busy hour minutes of capacity basis, the charge is also applied on a per trunk basis but the charge applies only when the capacity ordered requires the installation or activation of an additional trunk(s) which is uniquely identified for the sole use of the ordering customer.

For Entrance Facilities, a Local Transport nonrecurring installation charge, as set forth in Section 17 following, will be applied at the serving wire center for each Entrance Facility installed. This charge is not applied when the Telephone Company has identified in National Exchange Carrier Association, Inc. Tariff F.C.C. No. 4, Wire Center Information that it has not received a bona fide request for Direct Trunked Transport.

For Direct Trunked Transport ordered to the end office, a Local Transport nonrecurring trunk activation charge, as set forth in Section 17 following, will be applied at the end office on a per order basis for each group of 24 Direct Trunked Transport trunks or fraction thereof that is activated at the end office.

For Direct Trunked Transport ordered to the access tandem, a Local Transport nonrecurring trunk activation charge, as set forth in Section 17 following, will be applied at the access tandem on a per order basis for each group of 24 Direct Trunked Transport trunks or fraction thereof that is activated at the access tandem.

For Tandem Switched Transport, a Local Transport nonrecurring trunk activation charge, as set forth in Section 17 following, will be applied at the access tandem on a per order basis for each group of 24 dedicated trunks or fraction thereof that is activated at the access tandem.

6. Switched Access Service (Cont'd)

6.4 Rate Regulations (Cont'd)

6.4.1 Description and Application of Rates and Charges (Cont'd)

(B) Nonrecurring Charges (Cont'd)

(1) Installation of Service (Cont'd)

A maximum of 24 trunks can be activated on a DS1 facility and a maximum of 672 trunks can be activated on a DS3 facility.

For example, if a customer orders a DS1 Entrance Facility and requests activation of 18 of the available circuits, the customer will be charged one Local Transport High Capacity DS1 Installation nonrecurring charge at the serving wire center and one Direct Trunked Transport Activation nonrecurring charge at the end office. If at a later date the customer requests the activation of three more circuits, the customer will then be charged an additional Direct Trunked Transport Activation nonrecurring charge. These charges are in addition to the Access Order Charge as specified in Section 17 following.

(2) Interim NXX Translation Optional Feature

This nonrecurring charge applies to the initial order for the installation of the Interim NXX Translation optional feature with Feature Group C or Feature Group D Switched Access Service and for each subsequent order received to add or change NXX translation codes. This charge, if applicable, applies whether this optional feature is installed coincident with or at any time subsequent to the installation of Switched Access Services. This charge is applied by the Telephone Company per order, per LATA or Market Area. When it is necessary for multiple telephone companies to provide the translation function, the nonrecurring charge is assessed only by the Telephone Company that provides the final translation function which identifies the customer's traffic and this traffic is then delivered to the customer's point of termination without any further translation.

6. Switched Access Service (Cont'd)

6.4 Rate Regulations (Cont'd)

6.4.1 Description and Application of Rates and Charges (Cont'd)

(B) Nonrecurring Charges (Cont'd)

(3) Service Rearrangements

All changes to existing services other than changes involving administrative activities and the off-hook supervisory signaling of FGA Access Services, will be treated as a discontinuance of the existing service and an installation of a new service. The nonrecurring charge described in (1) preceding will apply for this work activity. Moves that change the physical location of the point of termination are described and charged for as set forth in 6.4.4 following.

If, due to technical limitations of the Telephone Company, a customer could not combine its Interim NXX traffic with its other trunk side Switched Access Services, no charge shall apply to combine these trunk groups when it becomes technically possible.

Administrative changes will be made without charge(s) to the customer. Administrative changes are as follows:

- Change of customer name,
- Change of customer or customer's end user premises address when the change of address is not a result of a physical relocation of equipment,
- Change in billing data (name, address, or contact name or telephone number),
- Change of agency authorization,
- Change of customer circuit identification,
- Change of billing account number,
- Change of customer test line number,
- Change of customer or customer's end user contact name or telephone number, and
- Change of jurisdiction.

Other changes made without charge to the customer are as follows:

- Changes and additions to existing Switched Access Services which are necessary due to Telephone Company initiated network reconfigurations, and required to provide the same grade of service to the customer that existed prior to the reconfiguration. Charges will apply to those changes and additions which are in excess of those required to provide the same grade of service and/or capacity. Grade of service will be as determined by industry standard engineering tables.
- When a customer requests a change of trunks from tandem-switched transport to direct-trunked transport or orders the disconnection of over-provisioned trunks, the nonrecurring charges set forth in (1) preceding do not apply providing:
- the change is ordered anytime between June 17, 1997 and December 31, 1998 and
- the change is completed no later than March 31, 1999 and
- the orders to disconnect existing trunks and to connect new trunks are placed at the same time.

6. Switched Access Service (Cont'd)

6.4 Rate Regulations (Cont'd)

6.4.1 Description and Application of Rates and Charges (Cont'd)

(B) Nonrecurring Charges (Cont'd)

(3) Service Rearrangements (Cont'd)

Changes to the point in time when the off-hook supervisory signal is provided in the originating call sequence i.e., when the off-hook supervisory signal is changed from being provided by the customer's equipment before the called party answers to being forwarded by the customer's equipment when the called party answers or vice versa, are subject to the Access Order Charge as set forth in Section 17 following.

For additions, changes or modifications to an optional feature which has a separate nonrecurring charge, that nonrecurring charge will apply.

For additions, changes, or modifications to optional features that do not have their own separate nonrecurring charges, an Access Order Charge as set forth in Section 17 following will apply (with the exception of the addition of 64 Clear Channel Capability to an existing service).

When an optional feature is not required on each transmission path, but rather for an entire transmission path group, an end office or an access tandem switch, only one such charge will apply (i.e., it will not apply per transmission path).

When the 64 Clear Channel Capability optional feature is installed on an existing facility, the addition will be treated as a discontinuance and start of service and all associated non-recurring charges will apply.

For conversion of FGC and FGD trunks from multifrequency address signaling to SS7 signaling or from SS7 signaling to multifrequency address signaling, nonrecurring charges will apply as set forth in Section 17 following.

6. Switched Access Service (Cont'd)

6.4 Rate Regulations (Cont'd)

6.4.1 Description and Application of Rates and Charges (Cont'd)

(C) Application of Rates

Rates are applied either as premium or non-premium rates. The application of these rates is dependent upon the Feature Group, type of Entrance Facility, type of transport (e.g., Direct Trunked Transport, Tandem Switched Transport, type of Multiplexing) and the availability of equal access capabilities in the end office to which the service is provided.

The following rules provide the basis for applying the rates and charges:

(1) Premium Rates

Premium rates apply to all FGC access minutes when the service is provided to customers which furnish interstate MTS/WATS, to all access minutes that originate or terminate at end offices equipped with equal access (i.e., FGD) capabilities. Premium rates also apply to FGB and FGD access minutes that originate or terminate at a Wireless Switching Center (WSC) that is directly connected to a Telephone Company access tandem office. In addition, premium rates apply to FGA and FGB access minutes when utilized in the provision of MTS/WATS service.

6. Switched Access Service (Cont'd)

6.4 Rate Regulations (Cont'd)

6.4.1 Description and Application of Rates and Charges (Cont'd)

(C) Application of Rates (Cont'd)

(1) Premium Rates (Cont'd)

In addition, premium rates always apply to the following Local Transport rate elements:

- Entrance Facility
- Direct Trunked Facility
- Direct Trunked Termination
- Multiplexing
- Tandem Switched Facility
- Tandem Switched Termination
- Tandem Switching

(2) Non-premium Rates

Non-premium rates do not apply to the following Local Transport rate elements:

- Entrance Facility
- Direct Trunked Facility
- Direct Trunked Termination
- Multiplexing
- Tandem Switched Facility
- Tandem Switched Termination
- Tandem Switching

Non-premium rates (i.e., discounted access minute rates) apply to all FGA and FGB access minutes (measured or assumed) originating or terminating in an end office which is not equipped with equal access capabilities. Non-premium rates do not apply to FGA and FGB access minutes when utilized in the provision of MTS/WATS service.

In addition, non-premium rates apply to FGC access minutes originating in an end office which is not equipped with equal access capabilities when the FGC service is used in conjunction with the Interim NXX Translation optional feature or 800 Data Base services by customers who do not furnish interstate MTS/WATS.

6. Switched Access Service (Cont'd)
6.4 Rate Regulations (Cont'd)

6.4.1 Description and Application of Rates and Charges (Cont'd)

(C) Application of Rates (Cont'd)

(3) Transition Billing Arrangement

When FGA, or FGB Switched Access Service, except as set forth in (1) preceding, provided to an entry switch (i.e., dial tone office for FGA and access tandem for FGB) has usage originating from and/or terminating at both end offices that have been converted to equal access and end offices that have not been converted, the premium and non-premium rates will apply in the following manner:

(a) All access minutes that originate from or terminate at the equal access end office(s) will be billed at premium rates. Access minutes that originate from or terminate at end offices not equipped with equal access capabilities, hereinafter referred to as non-premium access minutes, will continue to be billed at non-premium rates. Non-premium rates will apply as follows depending on the type of service.

(i) For FGA and FGB services, the number of non-premium access minutes to be billed at non-premium rates is derived by subtracting the number of premium rated access minutes from the total number of access minutes.

(ii) Premium access minutes will be determined as set forth in (b) following.

(b) The number of access minutes to be rated as premium access minutes is determined as follows:

(i) Where end office specific usage data is available, premium rates apply to the measured access minutes originating from or terminating at the equal access end office(s).

(ii) Where end office specific usage data is not available for originating and/or terminating FGA or FGB, the total originating and/or terminating usage will be measured or assumed usage at the entry switch as set forth respectively in 6.5.4 and 6.6.4 following. Originating and/or terminating usage will then be apportioned between premium and non-premium access minutes.

6. Switched Access Service (Cont'd)

6.4 Rate Regulations (Cont'd)

6.4.1 Description and Application of Rates and Charges (Cont'd)

(C) Application of Rates (Cont'd)

(3) Transition Billing Arrangement (Cont'd)

(b) (Cont'd)

(ii) (Cont'd)

Such apportionment will be based on the ratio of the number of subscriber lines in the access area (i.e., local calling areas for FGA originating minutes, LATA for FGA terminating minutes and end offices subtending the access tandem for FGB minutes) of the first point of switching that are served by equal access end offices to the total number of subscriber lines in that access area. The ratio thus developed is applied to the total measured or assumed originating FGA usage, terminating FGA usage, originating FGB usage or terminating FGB usage, as applicable, to determine the usage to be billed at premium rates, unless adjusted as set forth in (iii) following.

The ratios used to calculate the premium usage will be determined on a quarterly basis. The ratios to be used for the succeeding quarter will be provided to the customer with the last bill rendered in the quarter or mailed separately within five working days after the first day of the new quarter (i.e., January, April, July and October).

For purposes of administering this provision: (1) subscriber lines are defined as exchange service lines, Centrex lines and Centrex-type lines provided by the Telephone Company under its local and/or general exchange service tariff; (2) the access area is defined as the local calling area of the dial tone office for originating FGA, the entire LATA for terminating FGA, and all end offices subtending the access tandem for originating and terminating FGB; and (3) the local calling area of the dial tone office is as defined in the Telephone Company's local and/or general exchange service tariff.

6. Switched Access Service (Cont'd)

6.4 Rate Regulations (Cont'd)

6.4.1 Description and Application of Rates and Charges (Cont'd)

(C) Application of Rates (Cont'd)

(3) Transition Billing Arrangement (Cont'd)

(b) (Cont'd)

(iii) Where FGD Switched Access Service is provided to a customer in an end office(s) where that customer's FGA or FGB premium access minutes have been determined in accordance with (ii) preceding, such premium access minutes will be adjusted in the following manner. For each FGD access minute originating from or terminating at that end office the originating or terminating FGA or FGB premium access minutes determined as set forth in (ii) preceding will be reduced on a one for one basis, but in no event shall the reduction exceed the total number of FGA or FGB premium access minutes originating from or terminating at that end office. For each FGA or FGB premium minute of use reduction in either the originating or terminating direction, a corresponding originating or terminating non-premium minute of use will be apportioned to those end offices in the access area that are non-equal. Such apportionment will be based upon a ratio of the number of subscriber lines in each non-equal end office to the total subscriber lines that are served by all non-equal end offices in the access area. The customer will be billed for the revised number of premium or non-premium access minutes.

6. Switched Access Service (Cont'd)

6.4 Rate Regulations (Cont'd)

6.4.1 Description and Application of Rates and Charges (Cont'd)

(C) Application of Rates (Cont'd)

(4) Unmeasured FGA and FGB Access Services

Where originating and/or terminating measurement capability does not exist for Feature Group A or Feature Group B Switched Access Services provided to the first point of switching, the number of access minutes that will be assumed are as set forth following in 6.5.4 and 6.6.4 respectively.

(5) Notice of Equal Access Conversion

The Telephone Company will provide written notification to all access customers of record within a particular LATA that an end office in that LATA is scheduled to be converted to an equal access end office. This notification will be sent, via certified U.S. Mail, to each customer of record in the LATA where the conversion is scheduled to occur, at least six months in advance of the conversion date.

The customer will have the choice of converting all or part of the existing services to equal access (i.e., Feature Group D) or retaining the existing services. The conversion of existing services will be at no charge provided the order to convert such services to Feature Group D is received as set forth in 6.4.3 following. Premium rates will apply to the total access minutes beginning on the actual conversion date, whether the customer chooses to convert to FGD or retain existing services.

6. Switched Access Service (Cont'd)

6.4 Rate Regulations (Cont'd)

6.4.1 Description and Application of Rates and Charges (Cont'd)

(

C) Application of Rates (Cont'd)

(6) Common Channel Signaling/Signaling System 7 (CCS/SS7) Network Connection Service

The CCS/SS7 Network Connection is comprised of a Signaling Mileage Facility charge, a Signaling Mileage Termination charge, a Signaling Entrance Facility charge, and a Signaling Transfer Point (STP) Port charge.

The Signaling Mileage Facility charge is assessed on a per facility per mile basis. The Signaling Mileage Termination charge is assessed on a per termination basis (i.e., at each end of the Signaling Mileage Facility). When the Signaling Mileage Facility mileage measurement is zero, Signaling Mileage Termination charges do not apply.

The Signaling Entrance Facility charge is assessed on a per facility basis for the connection between the customer's designated premises (Signaling Point of Interface) and the serving wire center of that premises.

The STP Port charge is assessed on a per port basis for each termination of a Signaling Mileage Facility at an STP.

(7) 800 Data Base Access Service

A Basic Query or Vertical Feature Query charge applies for each completed query returned from the data base identifying the customer to whom the call will be delivered whether or not the actual call is delivered to the customer. The query is considered completed when the appropriate call routing information is returned to the Service Switching Point (SSP) that launched the query. Query charges, as set forth in Section 17, will only be applied by those companies whose wire centers are identified as assessing query charges in the National Exchange Carrier Association, Inc. Tariff F.C.C. No. 4.

6. Switched Access Service (Cont'd)

6.4 Rate Regulations (Cont'd)

6.4.1 Description and Application of Rates and Charges (Cont'd)

(C) Application of Rates (Cont'd)

(7) 800 Data Base Access Service (Cont'd)

When Feature Group C or Feature Group D switched access service is used for the provision of 800 Data Base Access Service and the total minutes of use and/or count of queries can be determined for each customer at a tandem or SSP but can not be determined by individual end office, an allocation method will be utilized to determine minutes of use and/or queries by end office and customer. For each end office a ratio will be developed and applied against the total minutes of use and/or count of queries for a given customer as determined by the tandem or SSP. These ratios will be developed by dividing the unidentified originating 800 series minutes of use at an end office by the total unidentified originating minutes of use in all end offices subtending the tandem or SSP. For example, assume:

-Three end offices (EO-1, EO-2, and EO-3) subtend a tandem

EO-1 measures 2,000 minutes of 800 use
EO-2 measures 3,000 minutes of 800 use
EO-3 measures 5,000 minutes of 800 use
10,000 TOTAL

- The tandem delivers 800 usage to two customers:

IC-A has 4,000 minutes of use
IC-B has 6,000 minutes of use

-The allocation ratio for EO-1 is 20%

2,000/10,000

-The minutes of use to be billed by EO-1 are

800 to IC-A (20% X 4,000)
1,200 to IC-B (20% X 6,000)
2,000 TOTAL

6. Switched Access Service (Cont'd)

6.4 Rate Regulations (Cont'd)

6.4.2 Minimum Monthly Charge

Switched Access Service is subject to a minimum monthly charge. The minimum charge applies for the total capacity provided. The minimum monthly charge is calculated as follows.

For usage rated Local Transport, Local Switching and Information Surcharge rate elements, the minimum monthly charge is the sum of the recurring charges set forth in Section 17 following for either the actual measured usage or the assumed usage prorated to the number of days or major fraction of days based on a 30 day month.

For flat rated Local Transport rate elements, the minimum monthly charge is the sum of the recurring charges set forth in Section 17 following prorated to the number of days or major fraction of days on a 30 day month.

6. Switched Access Service (Cont'd)

6.4 Rate Regulations (Cont'd)

6.4.3 Change of Switched Access Service Arrangements

Changes from one type of Feature Group to another will be treated as a discontinuance of one type of service and a start of another. Nonrecurring charges will apply, with one exception. When a customer upgrades a Feature Group A or B service to a Feature Group D service and when Feature Group C is upgraded to Feature Group D coincident with the availability of Feature Group D in an end office, the nonrecurring charges associated with the equal access conversion will not apply. Nonrecurring charges for other associated service requests, (e.g., a simultaneous change from multifrequency address signaling to SS7 signaling) will apply. Minimum period obligations will not change, i.e., the time elapsed in the existing minimum period obligation will be credited to the minimum period obligations for FGD service, subject to the following limitations.

In order to avoid the imposition of nonrecurring charges a customer which is a participant in the presubscription allocation process (i.e., is on the presubscription ballot) must:

- submit its order to disconnect Feature Group A and/or B within 30 days after the date the results of the final allocation of customers in an end office are actually received by the customer, and

- make the effective date for disconnection of the Feature Group A and/or B Access Services no later than 60 days after the final allocation results are received by the customer.

A customer which is not a participant in the allocation process (i.e., is not on the presubscription ballot) is subject to the same rules preceding. The time frames for the non-participating customer(s) are the same as those which apply to the last customer to receive the results of the final allocation of customers in an end office who is a participant in the allocation process. For all other changes from one type of Feature Group to another, new minimum period obligations will be established.

6. Switched Access Service (Cont'd)

6.4 Rate Regulations (Cont'd)

6.4.4 Moves

A move involves a change in the physical location of one of the following:

- The point of termination at the customer designated premises
- The customer designated premises

The charges for the move are dependent on whether the move is to a new location within the same building or to a different building.

(A) Moves Within the Same Building

When the move is to a new location within the same building, the charge for the move will be an amount equal to one half of the installation nonrecurring charge for the capacity affected. This charge is in addition to the Access Order Charge as specified in 17.4.1(A) following. There will be no change in the minimum period requirements.

(B) Moves to a Different Building

Moves to a different building will be treated as a discontinuance and start of service and all associated nonrecurring charges will apply. New minimum period requirements will be established for the new service. The customer will also remain responsible for satisfying all outstanding minimum period charges for the discontinued service.

6.4.5 Local Information Delivery Services

Calls over Switched Access Service in the terminating direction to certain community information services will be rated under the applicable rates for Switched Access Service as set forth in Section 17 following. In addition, the charges per call as specified under the Telephone Company's local and/or general exchange service tariffs, e.g., 976 (DIAL-IT) Network Services, will also apply.

6. Switched Access Service (Cont'd)

6.4 Rate Regulations (Cont'd)

6.4.6 Mileage Measurement

The mileage to be used to determine the monthly rate for Local Transport is calculated on airline distances between the end office switch, which may be a Remote Switching Module, (where the call carried by Local Transport originates or terminates) and the customer's serving wire center. When Direct Trunked Transport is ordered between the serving wire center and the end office, mileage is normally measured in one segment from the serving wire center to the end office. When Direct Trunked Transport is ordered between a serving wire center and a tandem and Tandem Switched Transport is ordered between the tandem and the end office, mileage is calculated separately for each segment. Exceptions to these methods are as set forth in (B) through (I) following. For SS7 signaling, the mileage to be used to determine the monthly rate for the Signaling Mileage Facility is calculated on the airline distance between the serving wire center associated with the customer's designated premises (Signaling Point of Interface) and the Telephone Company wire center providing the STP Port.

Where applicable, the V&H coordinates method is used to determine mileage. This method is set forth in the National Exchange Carrier Association, Inc. Tariff F.C.C. No. 4 for Wire Center Information (V&H coordinates).

Mileage rates are as set forth in Section 17 following. To determine the rate to be billed, first compute the airline mileage using the V&H coordinates method. If the calculation results in a fraction of a mile, always round up to the next whole mile before determining the mileage and applying the rates. Then multiply the mileage by the appropriate rate.

Exceptions to the mileage measurement rules are as follows:

(A) Feature Group A - Originating Usage

Direct Trunked Transport Mileage for premium and non-premium rated access minutes in the originating direction over Feature Group A Switched Access Service will be calculated on an airline basis, using the V&H coordinates method. The mileage measurement will be between the first point of switching (end office switch where the Feature Group A switching dial tone is provided) and the customer's serving wire center for the Switched Access Service provided.

6. Switched Access Service (Cont'd)

6.4 Rate Regulations (Cont'd)

6.4.6 Mileage Measurement (Cont'd)

(B) Feature Group A Terminating Usage

The Local Transport mileage for terminating Feature Group A Switched Access Service when the Telephone Company provides Direct Trunked Transport will be measured in two segments. Direct Trunked Transport mileage will be measured between the customer's serving wire center and the first point of switching (i.e., the end office switch where the Feature Group A switching dial tone is provided). Tandem Switched Transport mileage will be measured between the first point of switching and the terminating end office.

(C) Feature Groups B, C and D - Alternate Traffic Routing

When the Alternate Traffic Routing optional feature is provided with Feature Groups B, C or D, the Local Transport access minutes will be apportioned between the two trunk groups used to provide this feature. Such apportionment will be made using: (1) actual minutes of use if available, (2) standard Telephone Company traffic engineering methodology and will be based on the last trunk CCS desired for the high usage group, as described in 6.10.1(L) following (Alternate Traffic Routing), and the total busy hour minutes of capacity ordered to the end office, when the feature is provided at an end office switch, or to the subtending end offices when the feature is provided at an access tandem switch, or (3) an apportionment mutually agreed to by the Telephone Company and the customer. This apportionment will serve as the basis for Local Transport calculation.

(D) Feature Group C - Multiple CDPs

When terminating Feature Group C Switched Access Service is provided from multiple customer designated premises to an end office not equipped with measurement capabilities, the total Local Transport access minutes for that end office will be apportioned among the trunk groups accessing the end office on the basis of the individual busy hour minutes of capacity ordered for each of those trunk groups. This apportionment will serve as the basis for Local Transport mileage calculation.

6. Switched Access Service (Cont'd)

6.4 Rate Regulations (Cont'd)

6.4.6 Mileage Measurement (Cont'd)

(E) Feature Groups A, B, C and D - WATS

The Local Transport Facility for Feature Groups A, B, C and D Switched Access Service connected with Special Access Service at a WATS Serving Office will be measured between the WATS Serving Office (when measured access minutes of use are used) or between the Feature Group A entry switch (when assumed minutes of use are used) and the serving wire center for the customer designated premises.

(F) Feature Groups B and D - WSCs Directly Interconnected to Access Tandems

The Local Transport mileage for Feature Groups B and D switched access service provided to Wireless Switching Centers (WSCs) directly interconnected to a Telephone Company access tandem office will be determined on an airline basis, using the V&H coordinate method. The mileage will be measured between the customer's serving wire center and the Telephone Company access tandem office to which the WSC is interconnected.

(G) Feature Groups B, C, and D - Remote Offices

When the Telephone Company provides Direct Trunked Transport the Local Transport mileage for Feature Groups B, C, and D Switched Access Service provided to a Remote Office will be measured in multiple segments.

When the facility is directly trunked to the Host Office, Direct Trunked Facility mileage will be measured between the customer's serving wire center and the Host Office, and Tandem Switched Facility mileage will be measured between the Host Office and the Remote Office. The Tandem Switching charge will not apply.

When the facility is directly trunked to a tandem, Direct Trunked Facility will be measured from the Serving Wire Center to the tandem, Tandem Switched Facility will be measured from the tandem to the host, and another segment of Tandem Switched Facility will be measured from the host to the remote. A Tandem Switching charge will be applicable at the tandem.

6. Switched Access Service (Cont'd)

6.4 Rate Regulations (Cont'd)

6.4.6 Mileage Measurement (Cont'd)

(H) Use of Telephone Company Hub

When multiplexing is performed at Telephone Company Hubs, mileage is computed and rates applied separately for each segment of the Local Transport Direct Trunked Facility (i.e., customer serving wire center to Hub, Hub to Hub, and/or Hub to end office).

6.4.7 Mixed Use

Mixed use occurs when Switched Access Service and Special Access Service are provided over the same High Capacity service through a common interface. The regulations governing the provision of Mixed Use Facilities are set forth in 5.2.4 preceding and 7.2.7 following.

The Telephone Company will designate the first point(s) of switching and routing to be used where equal access traffic is provided through a centralized equal access arrangement. Those Telephone Company offices providing equal access through centralized arrangements are identified in National Exchange Carrier Association, Inc. Tariff F.C.C. No. 4.

6.4.8 Message Unit Credit for Feature Group A

Calls from end users to the seven digit local telephone numbers associated with Feature Group A Switched Access Service are subject to Telephone Company local and/or general exchange service tariff charges (including message unit and toll charges as applicable). The monthly bills rendered to customers for their Feature Group A Switched Access Service will include a credit to reflect any message unit charges collected from their end users under the Telephone Company's local and/or general exchange service tariffs. When the customer is provided FGA service where measurement capability does not exist, the credit will apply to access minutes not to exceed the assumed originating access minutes. No credit will apply for any terminating FGA access minutes. The message unit credit for originating access minutes will be based on the generally applicable message unit charges of the Telephone Company.

6. Switched Access Service (Cont'd)

6.4 Rate Regulations (Cont'd)

6.4.9 Application of Rates for Feature Group A Extension Service

Feature Group A Switched Access Service is available with extensions, i.e., additional terminations of the service at different customer designated premises in the same LATA as the FGA dial tone office or a LATA other than the LATA where the FGA dial tone office is located. Feature Group A extensions within the same LATA and same state as the dial tone office are provided and charged under the Telephone Company's local and/or general exchange service tariffs. Feature Group A extensions located in a LATA other than the LATA where the dial tone office is located or in a different state in the same LATA as the dial tone office are provided and charged as Special Access Service. The rate elements which apply are: A Voice Grade Channel Termination, Channel Mileage, if applicable, and Signaling Capability (optional features and functions), if applicable. All appropriate monthly rates and nonrecurring charges set forth in Section 17 following will apply.

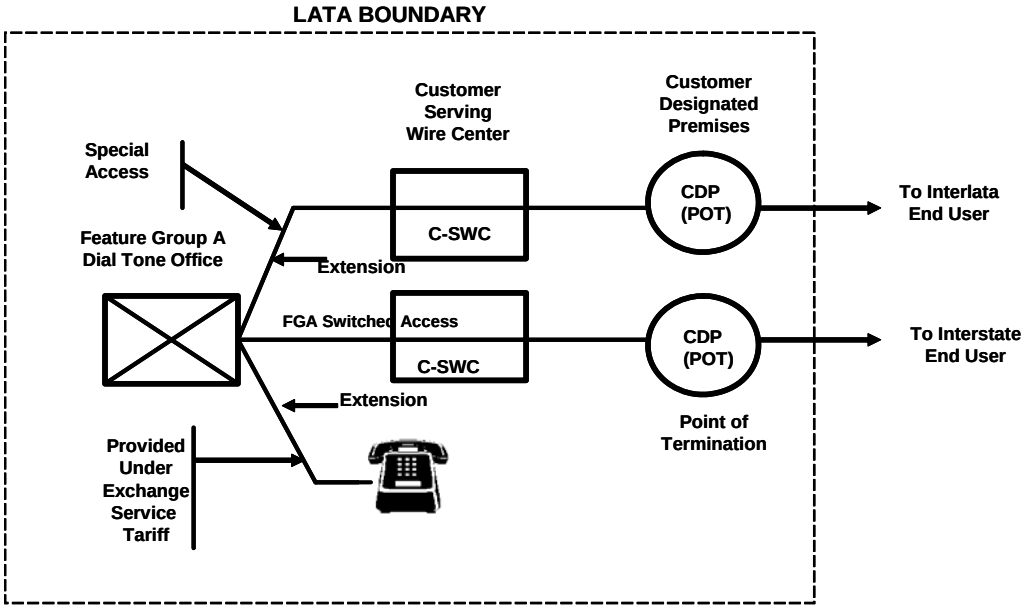

FEATURE GROUP A EXTENSION SERVICE

In the above example, two CDPs are utilized to better illustrate the concept. From a practical standpoint, both the Switched Access and Special Access Services could be routed via the same CDP.

6. Switched Access Service (Cont'd)

6.5 Description and Provision of Feature Group A (FGA)

6.5.1 Description

(A) FGA Access, which is available to all customers, provides line side access to Telephone Company end office switches with an associated seven digit local telephone number for the customer's use in originating communications from and terminating communications to an Interexchange Carrier's Interstate Service or a customer - provided interstate communications capability. The customer must specify the Interexchange Carrier to which the FGA service is connected or, in the alternative, specify the means by which the FGA access communications is transported to another state. Special Access Services utilized for connection with FGA at Telephone Company designated WATS Serving Offices as set forth in Section 7. following may be ordered separately by a customer other than the customer which orders the FGA Switched Access Service for the provision of WATS-type services. Special Access Services are ordered as set forth in 5.2 preceding.

(B) FGA Switching is provided at all end office switches. At the option of the customer, FGA is provided on a single or multiple line group basis and is arranged for originating calling only, terminating calling only, or two-way calling which are specified by the customer's order for service.

(C) FGA provides a line side termination at the first point of switching (dial tone office). The line side termination will be provided with either ground start supervisory signaling or loop start supervisory signaling. The type of signaling is at the option of the customer.

(D) The Telephone Company shall select the first point of switching, within the selected LATA, at which the line side termination is to be provided unless the customer requests a different first point of switching and Telephone Company facilities and measurement capabilities, where necessary, are available to accommodate such a request.

(E) A seven digit local telephone number assigned by the Telephone Company is provided for access to FGA switching in the originating direction. The seven digit local telephone number will be associated with the selected end office switch and is of the form NXX-XXXX.

If the customer requests a specific seven digit telephone number that is not currently assigned, and the Telephone Company can, with reasonable effort, comply with that request, the requested number will be assigned to the customer.

6. Switched Access Service (Cont'd)

6.5 Description and Provision of Feature Group A (FGA) (Cont'd)

6.5.1 Description (Cont'd)

(F) FGA switching, when used in the terminating direction, is arranged with dial tone start-dial signaling. When used in the terminating direction FGA switching may, at the option of the customer, be arranged for dial pulse or dual tone multifrequency address signaling, subject to availability of equipment at the first point of switching. When FGA switching is provided in a hunt group or uniform call distribution arrangement, all FGA switching will be arranged for the same type of address signaling.

(G) No address signaling is provided by the Telephone Company when FGA switching is used in the originating direction. Address signaling in such cases, if required by the customer, must be provided by the customer's end user using inband tone signaling techniques. Such inband tone address signals will not be regenerated by the Telephone Company and will be subject to the ordinary transmission capabilities of the Local Transport provided.

(H) FGA switching, when used in the terminating direction, may be used to access valid NXXs in the LATA, local operator service (0- and 0+), Directory Assistance (411 where available and 555-1212), emergency reporting service (911 where available), exchange telephone repair (611 where available), time or weather announcement services of the Telephone Company, community information services of an information service provider, and other customers' services (by dialing the appropriate digits).

Charges for FGA terminating calls requiring operator assistance or calls to 611 or 911 will only apply where sufficient call details are available. Additional non-access charges will also be billed on

6. Switched Access Service (Cont'd)

6.5 Description and Provision of Feature Group A (FGA) (Cont'd)

6.5.1 Description (Cont'd)

(H) Cont'd)

a separate account for (1) an operator surcharge, as set forth in the local exchange tariffs, for local operator assistance (0- and 0+) calls, (2) calls to certain community information services, for which rates are applicable under Telephone Company exchange service tariffs, e.g., 976 (DIAL IT) Network Services, and, (3) calls from a FGA line to another customer's service in accordance with that customer's applicable service rates when the Telephone Company performs the billing function for that customer.

(I) When a FGA switching arrangement for an individual customer (a single line or entire hunt group) is discontinued at an end office, an intercept announcement is provided. This arrangement provides, for a limited period of time, an announcement that the service associated with the number dialed has been disconnected.

(J) FGA will be provisioned over an Entrance Facility from the customer's premises to the customer's serving wire center.

FGA service, when used in the originating direction, will be provisioned as Direct Trunked Transport from the first point of switching (i.e., the end office switch where FGA switching dial tone is provided) to the customer's serving wire center.

FGA service, when used in the terminating direction, will be provisioned as Direct Trunked Transport from the customer's serving wire center to the first point of switching and provisioned as Tandem Switched Transport from the first point of switching to the terminating end office. The Tandem Switching charge will not apply.

6. Switched Access Service (Cont'd)

6.5 Description and Provision of Feature Group A (FGA) (Cont'd)

6.5.2 Optional Features

Following are the various nonchargeable optional features that are available in lieu of, or in addition to, the standard features provided with Feature Group A. They are provided as Common Switching, Transport Termination or Local Transport options.

(A) Common Switching Options

Descriptions of the common switching optional features are set forth in 6.10 following.

(1) Call Denial on Line or Hunt Group

(2) Service Code Denial on Line or Hunt Group

(3) Hunt Group Arrangement

(4) Uniform Call Distribution Arrangement

(5) Nonhunting Number for Use with Hunt Group or Uniform Call Distribution Arrangement

(6) Band Advance Arrangement for Use with Special Access Service Utilized in the Provision of WATS-Type Services

(7) Hunt Group Arrangement for Use with Special Access Service Utilized in the Provision of WATS-Type Services

(8) Uniform Call Distribution Arrangement for Use with Special Access Service Utilized in the Provision of WATS-Type Services

(9) Nonhunting Number Associated with a Hunt Group Arrangement or Uniform Call Distribution Arrangement for Use with Special Access Service Utilized in the Provision of WATS-Type Services

6. Switched Access Service (Cont'd)

6.5 Description and Provision of Feature Group A (FGA) (Cont'd)

6.5.2 Optional Features (Cont'd)

(B) Transport Termination

(1) Two-way operation with dial pulse address signaling and loop start supervisory signaling
(2) Two-way operation with dial pulse address signaling and ground start supervisory signaling
(3) Two-way operation with dial tone multifrequency address signaling and loop start supervisory signaling
(4) Two-way operation with dial tone multifrequency address signaling and ground start supervisory signaling
(5) Terminating operation with dial pulse address signaling and loop start supervisory signaling
(6) Terminating operation with dial pulse address signaling and ground start supervisory signaling
(7) Terminating operation with dual tone multifrequency address signaling and loop start supervisory signaling
(8) Terminating operation with dual tone multifrequency address signaling and ground start supervisory signaling
(9) Originating operation with loop start supervisory signaling
(10) Originating operation with ground start supervisory signaling

(C) Local Transport Options

(1) Supervisory Signaling (as set forth in 15.1.1(E) following)

(2) Customer Specified Entry Switch Receive Level (as set forth in 15.1.1(E) following)

6. Switched Access Service (Cont'd)

6.5 Description and Provision of Feature Group A (FGA) (Cont'd)

6.5.3 Optional Features Provided In Local Tariffs

Certain other features which may be available in connection with Feature Group A (e.g., Speed Calling, Remote Call Forwarding, Bill Number Screening, IntraLATA extensions) are provided under the Telephone Company's local and/or general exchange service tariffs.

6.5.4 Measuring Access Minutes

Customer Feature Group A traffic to end offices will be measured (i.e., recorded) or assumed by the Telephone Company at end office switches. Originating and terminating calls will be measured (i.e., recorded) or assumed by the Telephone Company to determine the basis for computing chargeable access minutes. In the event the customer message detail is not available because the Telephone Company lost or damaged tapes or incurred recording system outages, the Telephone Company will estimate the volume of lost customer access minutes of use based on previously known values.

For terminating calls over FGA and for originating calls over FGA (when the off-hook supervisory signal is provided by the customer's equipment before the called party answers), the measured minutes are the chargeable access minutes. For originating calls over FGA (when the off-hook supervisory signal is forwarded by the customer's equipment when the called party answers), chargeable originating access minutes are derived from recorded minutes using the same formula as set forth in 6.7.4 following for Feature Group C.

For originating calls over FGA, usage measurement begins when the originating FGA first point of switching receives an off-hook supervisory signal forwarded from the customer's point of termination. This off-hook signal may be provided by the customer's equipment before the called party answers, or forwarded by the customer's equipment when the called party answers.

The measurement of originating call usage over FGA ends when the originating FGA first point of switching receives an on-hook supervisory signal from either the originating end user's end office, indicating the originating end user has disconnected, or the customer's point of termination, whichever is recognized first by the first point of switching.

6. Switched Access Service (Cont'd)

6.5 Description and Provision of Feature Group A (FGA) (Cont'd)

6.5.4 Measuring Access Minutes (Cont'd)

For terminating calls over FGA, usage measurement begins when the terminating FGA first point of switching receives an off-hook supervisory signal from the terminating end user's end office, indicating the terminating end user has answered. The measurement of terminating call usage over FGA ends when the terminating FGA first point of switching receives an on-hook supervisory signal from either the terminating end user's end office, indicating the terminating end user has disconnected, or the customer's point of termination, whichever is recognized first by the first point of switching.

FGA access minutes or fractions thereof, the exact value of the fraction being a function of the switch technology where the measurement is made, are accumulated over the billing period for each line or hunt group, and are then rounded up to the nearest access minute for each line or hunt group.

Assumed minutes are used for FGA services which originate or terminate in end offices not equipped with measurement capabilities and in such cases are the chargeable access minutes.

Where originating and terminating measurement capability does not exist for Feature Group A provided to the first point of switching, the number of access minutes will be assumed as set forth in Section 17 following.

Where measurement capability exists for either originating or terminating usage, but not both, on a line arranged for two way calling, the number of access minutes per line per month will be assumed usage, as set forth in Section 17 following, or the measured usage, whichever is greater. If the usage in the measured direction exceeds the assumed access minutes per line per month, no usage will be assigned in the unmeasured direction. If the measured usage is less than the assumed access minutes per line per month, the usage in the unmeasured direction will be the assumed usage, as set forth in Section 17 following, direction except that the total of measured and assumed minutes in such instances will not exceed the total assumed usage designated for two way calling set forth in Section 17 following. If the total exceeds the assumed minutes set forth in Section 17 following, the assigned minutes shall be reduced so that the total of measured and unmeasured minutes equals the assumed minutes for two way calling set forth in Section 17 following.

Additionally, when the line is arranged for one way calling and there is no measurement capability for that direction, assumed originating access minutes, as set forth in Section 17 following, will be assigned for originating calling only lines and assumed terminating access minutes, as set forth in Section 17 following, will be assigned for terminating calling only lines.

6. Switched Access Service (Cont'd)

6.5 Description and Provision of Feature Group A (FGA) (Cont'd)

6.5.4 Measuring Access Minutes (Cont'd)

The following matrix illustrates the application of assumed access minutes for FGA as set forth in Section 17 following.

Service Ordered As	Can Measure Originating	Can't Measure Originating	Can Measure Terminating	Can't Measure Terminating
Originating Only	Actual	1902	N/A	N/A
Terminating Only	N/A	N/A	Actual	1694
Both Originating and Terminating (originating measurement greater than 3596)	Actual	N/A	N/A	0
Both Originating and Terminating (originating measurement equal or less than 3596)	Actual	N/A	N/A	0 to 1694*
Both Originating and Terminating (terminating measurement greater than 3596)	N/A	0	Actual	N/A
Both Originating and Terminating (terminating measurement equal or less than 3596)	N/A	0 to 1902*	Actual	N/A

* Sum of actual and assumed cannot exceed 4195. Reduce assumed minutes of use if necessary.

6. Switched Access Service (Cont'd)

6.5 Description and Provision of Feature Group A (FGA) (Cont'd)

6.5.4 Measuring Access Minutes (Cont'd)

Notwithstanding the preceding, when Feature Group A is used for the provision of WATS-type service where measurement capability exists at the WATS Serving Office but not at the Feature Group A first point of switching, the measured WATS-type originating and/or terminating minutes of use shall be separately summed and compared to their respective total assumed originating and/or terminating minutes of use. The number of access minutes per line per month will be the assumed or the measured usage, whichever is greater.

6.5.5 Testing Capabilities

FGA is provided, in the terminating direction where equipment is available, with seven digit access to balance (100 type) test line and milliwatt (102 type) test line. In addition to the tests described in 6.2.4 preceding which are included with the installation of service (Acceptance Testing) and as ongoing routine testing, Additional Cooperative Acceptance Testing and Additional Manual Testing are available as set forth in 13.3.1 following.

6. Switched Access Service (Cont'd)

6.6 Description and Provision of Feature Group B (FGB)

6.6.1 Description

(A) FGB Access, which is available to all customers, provides trunk side access to Telephone Company end office switches with an associated uniform 950-XXXX access code. FGB trunk side access is provided for the customer's use in originating communications from and terminating communications to an Interexchange Carrier's Interstate Service or a customer provided interstate communications capability. The customer must specify the Interexchange Carrier to which the FGB service is connected or, in the alternative, specify the means by which the FGB access communications is transported to another state. Special Access Services utilized for connection with FGB at Telephone Company designated WATS Serving Offices as set forth in Section 7. following may be ordered separately by a customer other than the customer which orders the FGB Switched Access Service for the provision of WATS or WATS-type services. Special Access Services are ordered as set forth in 5.2 preceding.

(B) FGB, when directly routed to an end office (i.e., provided without the use of an access tandem switch), is provided at appropriately equipped Telephone Company electronic end office switches. When provided via Telephone Company designated electronic access tandem switches, FGB switching is provided at Telephone Company electronic and electromechanical end office switches.

6. Switched Access Service (Cont'd)

6.6 Description and Provision of Feature Group B (FGB) (Cont'd)

6.6.1 Description (Cont'd)

(C) FGB is provided as trunk side switching through the use of end office or access tandem switch trunk equipment. The switch trunk equipment is provided with wink start-pulsing signals and answer and disconnect supervisory signaling.

(D) FGB switching is provided with multifrequency address signaling in both the originating and terminating directions. Except for FGB switching provided with the automatic number identification (ANI) or rotary dial station signaling arrangements as set forth respectively in 6.10.1(F) and 6.10.2(A) following, any other address signaling in the originating direction, if required by the customer, must be provided by the customer's end user using inband tone signaling techniques. Such inband tone address signals will not be regenerated by the Telephone Company and will be subject to the ordinary transmission capabilities of the Local Transport provided.

(E) The access code for FGB switching is a uniform access code. The form of the uniform access code is 950-XXXX. A uniform access code(s) will be assigned to the customer for the customer's domestic communications and another will be assigned to the customer for its international communications, if required. These access codes will be the assigned access numbers of all FGB switched access service provided to the customer by the Telephone Company.

(F) The Telephone Company will establish a trunk group or groups for the customer at end office switches or access tandem switches where FGB switching is ordered. When required by technical limitations, a separate trunk group will be established for each type of FGB switching arrangement provided. Different types of FGB or other switching arrangements may be combined in a single trunk group at the option of the Telephone Company.

6. Switched Access Service (Cont'd)

6.6 Description and Provision of Feature Group B (FGB) (Cont'd)

6.6.1 Description (Cont'd)

(G) FGB switching, when used in the terminating direction, may be used to access valid NXXs in the LATA, time or weather announcement services of the Telephone Company, community information services of an information service provider and other customers' services (by dialing the appropriate digits). When directly routed to an end office, only those valid NXX codes served by that end office may be accessed. When routed through an access tandem, only those valid NXX codes served by end offices subtending the access tandem may be accessed.

The customer will also be billed additional non-access charges for calls to certain community information services for which rates are applicable under Telephone Company exchange service tariffs, e.g., 976 (DIAL-IT) Network Service. Additionally, non-access charges will also be billed for calls from a FGB trunk to another customer's service in accordance with that customer's applicable service rates when the Telephone Company performs the billing function for that customer.

6. Switched Access Service (Cont'd)

6.6 Description and Provision of Feature Group B (FGB) (Cont'd)

6.6.1 Description (Cont'd)

(H) When all FGB switching arrangements are discontinued at an end office and/or in a LATA, an intercept announcement is provided. This arrangement provides, for a limited period of time, an announcement that the service associated with the number dialed has been disconnected.

(I) For FGB switched access service to a Wireless Switching Center (WSC) directly interconnected to a Telephone Company access tandem office, the customer will be billed only the Local Transport premium rate element for the FGB usage. The mileage used to determine the monthly rate for the local transport rate element is as set forth in 6.4.6(G) preceding.

6. Switched Access Service (Cont'd)

6.6 Description and Provision of Feature Group B (FGB) (Cont'd)

6.6.2 Optional Features

Following are descriptions of the various nonchargeable optional features that are available in lieu of, or in addition to, the standard features provided with Feature Group B. They are set forth in (A), (B) and (C) following and are provided as Common Switching, Transport Termination and Local Transport options. Additionally, other optional features provided in local tariffs are set forth in (D) following.

(A) Common Switching Options

Descriptions of the common switching optional features are set forth in 6.10 following.

(1) Automatic Number Identification (ANI)

(2) Up to 7 Digit Outpulsing of Access Digits to Customer

(3) Band Advance Arrangement for Use with Special Access Service Utilized in the Provision of WATS or WATS-Type Services

(4) Hunt Group Arrangement for Use with Special Access Service Utilized in the Provision of WATS or WATS-Type Services

(5) Uniform Call Distribution Arrangement for Use with Special Access Service Utilized in the Provision of WATS or WATS-Type Services

(6) Nonhunting Number Associated with Hunt Group Arrangement or Uniform Call Distribution Arrangement for Use with Special Access Service Utilized in the Provision of WATS or WATS-Type Services

6. Switched Access Service (Cont'd)

6.6 Description and Provision of Feature Group B (FGB) (Cont'd)

6.6.2 Optional Features (Cont'd)

(B) Transport Terminations Options

(1) Rotary Dial Station Signaling

(C) Local Transport Options

(1) Customer Specification of Local Transport Termination

(2) Optional Supervisory Signaling

(3) Customer Specified Entry Switch Receive Level

Inasmuch as these options concern transmission levels and signaling they are set forth in 15.1.1 following.

(D) Optional Features Provided In Local Tariffs

Another feature, Bill Number Screening, which may be available in connection with FGB, is provided under the Telephone Company's local and/or general exchange service tariffs.

6. Switched Access Service (Cont'd)

6.6 Description and Provision of Feature Group B (FGB) (Cont'd)

6.6.3 Design and Traffic Routing

For Feature Group B, the trunk directionality and traffic routing of the Switched Access Service between the customer designated premises and the entry switch are determined by the customer's order for service; except the Telephone Company will designate the first point(s) of switching and routing to be used where equal access is provided through a centralized equal access arrangement. Those Telephone Company offices providing equal access through centralized arrangements are identified in National Exchange Carrier Association, Inc. Tariff F.C.C. No. 4.

Additionally, the customer may order the optional feature Customer Specification of Local Transport Termination as set forth in 15.1.1 following.

6.6.4 Measuring Access Minutes

Customer traffic to end offices will be measured (i.e., recorded) or assumed by the Telephone Company at end office switches or access tandem switches. Originating and terminating calls will be measured (i.e., recorded) or assumed by the Telephone Company to determine the basis for computing chargeable access minutes. In the event the customer message detail is not available because the Telephone Company lost or damaged tapes or incurred recording system outages, the Telephone Company will estimate the volume of lost customer access minutes of use based on previously known values.

For both originating and terminating calls over FGB the measured minutes are the chargeable access minutes.

For originating calls over FGB, usage measurement begins when the originating FGB first point of switching receives answer supervision forwarded from the customer's point of termination, indicating the customer's equipment has answered.

6. Switched Access Service (Cont'd)

6.6 Description and Provision of Feature Group B (FGB) (Cont'd)

6.6.4 Measuring Access Minutes (Cont'd)

The measurement of originating call usage over FGB ends when the originating FGB first point of switching receives disconnect supervision from either the originating end user's end office, indicating the originating end user has disconnected, or the customer's point of termination, whichever is recognized first by the first point of switching.

For terminating calls over FGB, usage measurement begins when the terminating FGB first point of switching receives answer supervision from the terminating end user's end office, indicating the terminating end user has answered.

The measurement of terminating call usage over FGB ends when the terminating FGB first point of switching receives disconnect supervision from either the terminating end user's end office, indicating the terminating end user has disconnected, or the customer's point of termination, whichever is recognized first by the first point of switching.

FGB access minutes or fractions thereof, the exact value of the fraction being a function of the switch technology where the measurement is made, are accumulated over the billing period for each end office, and are then rounded up to the nearest access minute for each end office.

Assumed minutes are used for FGB services which originate or terminate in end offices not equipped with measurement capabilities and in such cases are the chargeable access minutes.

6. Switched Access Service (Cont'd)

6.6 Description and Provision of Feature Group B (FGB) (Cont'd)

6.6.4 Measuring Access Minutes (Cont'd)

Where originating and terminating measurement capability does not exist for Feature Group B provided to the first point of switching, the number of access minutes will be assumed, as set forth in Section 17 following, when the trunk is arranged for two way calling.

Where measurement capability exists for either originating or terminating usage, but not both, on a trunk arranged for two way calling, the number of access minutes per trunk per month will be assumed usage, as set forth in Section 17 following, or the measured usage, whichever is greater. If the usage in the measured direction exceeds the assumed access minutes per trunk per month, no usage will be assigned in the unmeasured direction. If the measured usage is less than the assumed access minutes per trunk per month, the usage in the unmeasured direction will be the assumed usage, as set forth in Section 17 following, for that unmeasured direction except that the total of measured and assumed minutes in such instances will not exceed the total assumed usage designated for two way calling set forth in Section 17 following. If the total exceeds the assumed minutes set forth in Section 17 following, the assigned minutes shall be reduced so that the total of measured and unmeasured minutes equals the assumed minutes for two way calling set forth in Section 17 following.

Additionally, when the trunk is arranged for one way calling and there is no measurement capability for that direction, assumed originating access minutes, as set forth in Section 17 following, will be assigned for originating calling only lines and assumed terminating access minutes, as set forth in Section 17 following, will be assigned for terminating calling only lines.

6. Switched Access Service (Cont'd)

6.6 Description and Provision of Feature Group B (FGB) (Cont'd)

6.6.4 Measuring Access Minutes (Cont'd)

The following matrix illustrates the application of assumed access minutes for FGB as set forth in Section 17 following.

Service Ordered As	Can Measure Originating	Can't Measure Originating	Can Measure Terminating	Can't Measure Terminating
Originating Only	Actual	4500	N/A	N/A
Terminating Only	N/A	N/A	Actual	4500
Both Originating and Terminating (originating measurement greater than 9000)	Actual	N/A	N/A	0
Both Originating and Terminating (originating measurement equal or less than 9000)	Actual	N/A	Actual	0 to 4500*
Both Originating and Terminating (terminating measurement greater than 9000)	N/A	0	Actual	N/A
Both Originating and Terminating (terminating measurement equal or less than 9000)	N/A	0 to 4500*	Actual	N/A

* Sum of actual and assumed cannot exceed 9000. Reduce assumed minutes of use if necessary.

6. Switched Access Service (Cont'd)

6.6 Description and Provision of Feature Group B (FGB) (Cont'd)

6.6.4 Measuring Access Minutes (Cont'd)

Notwithstanding the preceding, when Feature Group B is used for the provision of WATS or WATS-type service where measurement capability exists at the WATS Serving Office but not at the Feature Group B first point of switching, the measured WATS or WATS-type originating and/or terminating minutes of use shall be separately summed and compared to their respective total assumed originating and/or terminating minutes of use. The number of minutes per trunk per month will be the assumed or the measured usage, whichever is greater.

When Feature Group B is ordered at an access tandem and end office specific usage measurement is not available, the actual or assumed originating and/or terminating minutes of use as determined by the exchange carrier providing the access tandem will be apportioned among all subtending end offices. For each end office, such apportionment shall be based on the ratio of the total number of subscriber lines in each end office subtending the access tandem to the total number of subscriber lines associated with all end offices subtending the access tandem. For purposes of administering this regulation, subscriber lines are defined as exchange service lines, Centrex lines and Centrex-type lines provided by the telephone companies under local and/or general exchange service tariffs. The resulting ratio for each end office is then applied to the total access area originating and/or terminating minutes of use to determine originating and/or terminating minutes of use to be assigned for billing purposes to each subtending end office in the access area.

The ratio used to calculate the access minutes will be determined by the Telephone Company and provided to the customer upon his request within 15 days of the receipt of such request.

6.6.5 Testing Capabilities

FGB is provided, in the terminating direction where equipment is available, with seven digit access to balance (100 type) test line, milliwatt (102 type) test line, nonsynchronous or synchronous test line, automatic transmission measuring (105 type) test line, data transmission (107 type) test line, loop around test line, short circuit test line and open circuit test line. In addition to the tests described in 6.2.4 preceding which are included with the installation of service (Acceptance Testing) and as ongoing routine testing, Additional Cooperative Acceptance Testing, Additional Automatic Testing, and Additional Manual Testing are available as set forth in 13.3.1 following.

6. Switched Access Service (Cont'd)

6.7 Description and Provision of Feature Group C (FGC)

6.7.1 Description

(A) FGC Access provides trunk side access to Telephone Company end office switches for the customer's use in originating and terminating communications. Originating and terminating FGC Access is available to providers of MTS and WATS. Originating FGC Access is available to all customers when used to provide the Interim NXX Translation optional feature or 800 Data Base service. Terminating FGC access is available to all customers other than providers of MTS and WATS when such access is used in conjunction with the provision of the Interim NXX Translation optional feature or 800 Data Base service, but only for purposes of testing. Existing FGC Access will be converted to Feature Group D Access when Feature Group D Access becomes available in an end office. Special Access Services utilized for connection with FGC at Telephone Company designated WATS Serving Offices as set forth in Section 7. following may be ordered separately by a customer other than the customer which orders the FGC Switched Access Service (i.e., a provider of MTS and WATS) for the provision of WATS Services. Special Access Services are ordered as set forth in 5.2 preceding.

(B) Feature Group C switching is provided at all end office switches unless Feature Group D end office switching is provided in the same office. When FGD switching is available, FGC switching will not be provided. FGC is provided at Telephone Company end office switches on a direct trunk basis or via Telephone Company designated access tandem switches. Feature Group C switching is furnished to providers of MTS and WATS. Additionally, originating Feature Group C switching is available to all customers when used to provide 800 Data Base service. Terminating Feature Group C switching is available to all customers who are not MTS and WATS providers only when such terminating access is for purposes of testing Feature Group C facilities provided in conjunction with 800 Data Base Service.

6. Switched Access Service (Cont'd)

6.7 Description and Provision of Feature Group C (FGC) (Cont'd)

6.7.1 Description (Cont'd)

(C) FGC is provided as trunk side switching through the use of end office or access tandem switch trunk equipment. The switch trunk equipment is provided with answer and disconnect supervisory signaling. Wink start-pulsing signals are provided in all offices where available. In those offices where wink start-pulsing signals are not available, delay dial start- pulsing signals will be provided, unless immediate dial pulse signaling is provided, in which case no start-pulsing signals are provided.

(D) FGC is provided with multifrequency address signaling except in certain electromechanical end office switches where multifrequency signaling is not available. In such switches, the address signaling will be dial pulse or immediate dial pulse signaling, whichever is available. Up to 12 digits of the called party number dialed by the customer's end user using dual tone multifrequency or dial pulse address signals will be provided by Telephone Company equipment to the customer's premises where the Switched Access Service terminates. Such called party number signals will be subject to the ordinary transmission capabilities of the Local Transport provided.

(E) No access code is required for FGC switching. The telephone number dialed by the customer's end user shall be a seven or ten digit number for calls in the North American Numbering Plan (NANP). For international calls outside the NANP, a seven to twelve digit number may be dialed. The form of the numbers dialed by the customer's end user is NXX-XXXX, 0 or 1 + NXX-XXXX, NPA + NXX-XXXX, 0 or 1 + NPA + NXX-XXXX, and, when the end office is equipped for International Direct Distance Dialing (IDDD), 01 + CC + NN or 011 + CC + NN.

6. Switched Access Service (Cont'd)

6.7 Description and Provision of Feature Group C (FGC) (Cont'd)

6.7.1 Description (Cont'd)

(F) FGC switching, when used in the terminating direction, may be used to access valid NXXs in the LATA, time or weather announcement services of the Telephone Company, community information services of an information provider, and other customer's services (by dialing the appropriate codes) when the services can be reached using valid NXX codes. When directly routed to an end office, only those valid NXX codes served by that office may be accessed. When routed through an access tandem, only those valid NXX codes served by offices subtending the access tandem may be accessed. Where measurement capabilities exist, the customer will also be billed additional non-access charges for calls to certain community information services, for which rates are applicable under Telephone Company exchange service tariffs, e.g., 976 (DIAL IT) Network Services. Additionally, non-access charges will also be billed for calls from a FGC trunk to another customer's service in accordance with that customer's applicable service rates when the Telephone Company performs the billing function for that customer. FGC may not be switched, in the terminating direction, to Switched Access Service Feature Groups B, C or D.

6. Switched Access Service (Cont'd)

6.7 Description and Provision of Feature Group C (FGC) (Cont'd)

6.7.1 Description (Cont'd)

(G) The Telephone Company will establish a trunk group or groups for the customer at end office switches or access tandem switches where FGC switching is provided. When required by technical limitations, a separate trunk group will be established for each type of FGC switching arrangement provided. Different types of FGC or other switching arrangements may be combined in a single trunk group at the option of the Telephone Company.

(H) Unless prohibited by technical limitations the providers of MTS and WATS may, at their option, combine Interim NXX Translation and/or 800 Data Base traffic in the same trunk group arrangement with their non-Interim NXX Translation traffic. When required by technical considerations, or when provided to a customer other than the provider of MTS and WATS, or at the request of the customer (i.e., provider of MTS and WATS), a separate trunk group will be established for Interim NXX Translation traffic and/or 800 Data Base.

(I) FGC switching is provided with multifrequency address signaling or out of band SS7 signaling where technically feasible. With multifrequency address signaling and SS7 signaling, up to 12 digits of the called party number dialed by the customer's end user using dual tone multifrequency or dial pulse address signals will be provided by Telephone Company equipment to the customer's premises where the Switched Access Service terminates. Such address signals will be subject to the ordinary transmission capabilities of the Local Transport provided.

6. Switched Access Service (Cont'd)

6.7 Description and Provision of Feature Group C (FGC) (Cont'd)

6.7.2 Optional Features

Following are descriptions of the various nonchargeable and chargeable optional features that are available in lieu of, or in addition to, the standard features provided with Feature Group C. Nonchargeable optional features are provided as Common Switching, Transport Termination and Local Transport options as set forth in (A) through (C) following. Chargeable optional features are set forth in (D) following.

(A) Common Switching Options

Descriptions of the common switching optional features are set forth in 6.10 following.

(1) Automatic Number Identification (ANI)

(2) Signaling Options

(a) Delay Dial Start-Pulsing Signaling

(b) Immediate Dial Pulse Address Signaling

(c) Dial Pulse Address Signaling

(3) Service Class Routing

(4) Alternate Traffic Routing

(5) Trunk Access Limitation

(6) Band Advance Arrangement Associated with Special Access Service Utilized in the Provision of WATS Service

(7) End Office End User Line Service Screening for Use with Special Access Service Utilized in the Provision of WATS Service

(8) Hunt Group Arrangement for Use with Special Access Service Utilized in the Provision of WATS Service

6. Switched Access Service (Cont'd)

6.7 Description and Provision of Feature Group C (FGC) (Cont'd)

6.7.2 Optional Features (Cont'd)

(A) Common Switching Options (Cont'd)

(9) Uniform Call Distribution Arrangement for Use with Special Access Service Utilized in the Provision of WATS Services

(10) Nonhunting Number Associated with a Hunt Group Arrangement or Uniform Call Distribution Arrangement for Use with Special Access Service Utilized in the Provision of WATS Services

(11) Digital Switched 56 Service

(B) Transport Termination Options

(1) Operator Trunk - Coin, Non-Coin, or Combined Coin and Non-Coin
The Operator Trunk option is set forth in 6.10.2(B) following.

(C) Local Transport Options

(1) Supervisory Signaling
The Supervisory Signaling optional feature, due to its technical nature, is set forth in 15.1.1 following.

(2) Signaling System 7 (SS7)

The SS7 optional feature allows the customer to send and receive signals for out of band call set up and is available with Feature Group C. This option requires the establishment of a signaling connection between the customer's designated premises/Signaling Point of Interface (SPOI) and a Telephone Company Signaling Transfer Point (STP).

SS7 is provided in both the originating and terminating direction on FGC and each signaling connection is provisioned for two way SS7 signaling information.

6. Switched Access Service (Cont'd)

6.7 Description and Provision of Feature Group C (FGC) (Cont'd)

6.7.2 Optional Features (Cont'd)

(C) Local Transport Options (Cont'd)

(3) Multifrequency Address Signaling

(4) Calling Party Number (CPN)

(5) Charge Number Parameter (CNP)

(6) 64 Clear Channel Capability

The 64 Clear Channel Capability optional feature, due to its technical nature, is set forth in 15.1.1 following.

(D) Chargeable Optional Features

(1) Interim NXX Translation

The Interim NXX Translation Optional Feature is set forth in 6.10.3(A) following.

(2) Common Channel Signaling/Signaling System 7 (CCS/SS7) Network Connection Service (CCSNC)

The CCSNC Optional Feature is provided as set forth in 6.10.5 following.

6. Switched Access Service (Cont'd)

6.7 Description and Provision of Feature Group C (FGC) (Cont'd)

6.7.3 Design and Traffic Routing

For Feature Group C, the Telephone Company shall design and determine the routing of Switched Access Service. Additionally, for Tandem Switched Transport the Telephone Company will design and determine the routing from the first point of switching to the end office. The Telephone Company shall also decide if capacity is to be provided by originating only, terminating only, or two-way trunk groups. Finally, the Telephone Company will decide whether trunk side access will be provided through the use of two-wire or four-wire trunk terminating equipment.

Selection of facilities and equipment and traffic routing of the service are based on standard engineering methods, available facilities and equipment, and actual traffic patterns.

6. Switched Access Service (Cont'd)

6.7 Description and Provision of Feature Group C (FGC) (Cont'd)

6.7.4 Measuring Access Minutes

Customer traffic to end offices will be measured (i.e., recorded) by the Telephone Company at end office switches or access tandem switches. Originating and terminating calls will be measured or imputed by the Telephone Company to determine the basis for computing chargeable access minutes. In the event the customer message detail is not available because the Telephone Company lost or damaged tapes or incurred recording system outages, the Telephone Company will estimate the volume of lost customer access minutes of use based on previously known values.

For terminating calls over FGC when measurement capability exists, the measured minutes are the chargeable access minutes. For originating calls over FGC, chargeable originating access minutes are derived from recorded minutes in the following manner:

Step 1: Obtain recorded originating minutes and messages from the appropriate recording data.

Step 2: Obtain the total attempts by dividing the originating measured messages by the completion ratio. Completion ratios (CR) are obtained separately for the major call categories such as DDD, operator, 800 series, 900, directory assistance and international from a sample study which analyzes the ultimate completion status of the total attempts which receive acknowledgment from the customer. That is, Measured Messages divided by Completion Ratio equals Total Attempts.

6. Switched Access Service (Cont'd)

6.7 Description and Provision of Feature Group C (FGC) (Cont'd)

6.7.4 Measuring Access Minutes (Cont'd)

Step 3: Obtain the total non-conversation time additive (NCTA) by multiplying the total attempts (obtained in Step 2) by the NCTA per attempt ratio. The NCTA per attempt ratio is obtained from the sample study identified in Step 2 by measuring the non-conversation time associated with both completed and incompleted attempts. The total NCTA is the time on a completed attempt from customer acknowledgement of receipt of call to called party answer (set up and ringing) plus the time on an incompleted attempt from customer acknowledgment of call until the access tandem or end office receives a disconnect signal (ring - no answer, busy or network blockage). That is, Total Attempts times Non-Conversation Time per Attempt Ratio equals Total NCTA.

Step 4: Obtain total chargeable originating access minutes by adding the total NCTA (obtained in Step 3) to the recorded originating measured minutes (obtained in Step 1). That is, Measured Minutes plus NCTA equals Chargeable Originating Access Minutes.

Following is an example which illustrates how the chargeable originating access minutes are derived from the measured originating minutes using this formula.

Where: Measured Minutes (M. Min.)	= 7,000
Measured Messages (M. Mes.)	= 1,000
Completion Ratio (CR)	= .75
NCTA per Attempt	= .4

(1) Total Attempts $= \frac{1{,}000 \text{(M. Mes.)}}{.75 \text{ (CR)}} = 1{,}333.3$

(2) Total NCTA = .4 (NCTA per Attempt) x 1,333.33 = 533.33

(3) Total Chargeable Originating Access Minutes = 7,000 (M. Min) + 533.33 (NCTA) =7,533.33

FGC access minutes or fractions thereof, the exact value of the fraction being a function of the switch technology where the measurement is made, are accumulated over the billing period for each end office, and are then rounded up to the nearest access minute for each end office.

6. Switched Access Service (Cont'd)

6.7 Description and Provision of Feature Group C (FGC) (Cont'd)

6.7.4 Measuring Access Minutes (Cont'd)

Originating Usage

For originating calls over FGC, provided with Multi-Frequency Signaling, usage measurement begins when the originating FGC first point of switching receives answer supervision from the customer's point of termination, indicating the called party has answered.

For originating calls over FGC provided with Signaling System 7 (SS7) Signaling when the FGC end office is not routed through an access tandem for connection to the customer, usage measurement begins when the SS7 Initial Address Message is sent from the Service Switching Point (SSP) to the Signal Transfer Point (STP).

For originating calls over FGC provided with Signaling System 7 (SS7) Signaling when the FGC end office is routed through a tandem for connection to the customer, usage measurement begins when the FGC end office receives the SS7 Exit Message from the tandem.

The measurement of originating call usage over FGC provided with Multi-Frequency Signaling ends when the originating FGC first point of switching receives disconnect supervision from either the originating end user's end office, indicating the originating end user has disconnected, or the customer's point of termination, whichever is recognized first by the first point of switching.

The measurement of originating call usage over FGC provided with SS7 Signaling ends when the originating FGC end office receives an SS7 Release Message indicating either the originating or terminating end user has disconnected.

Terminating Usage

For terminating calls over FGC the chargeable access minutes are either measured or derived. For terminating calls over FGC where measurement capability does not exist, terminating FGC usage is derived from originating usage, excluding usage from calls to closed end services.

6. Switched Access Service (Cont'd)

6.7 Description and Provision of Feature Group C (FGC) (Cont'd)

6.7.4 Measuring Access Minutes (Cont'd)

Terminating Usage (Cont'd)

For terminating calls over FGC provided with Multi-Frequency Signaling, where measurement capability exists, the measurement of chargeable access minutes begins when the terminating FGC first point of switching receives answer supervision from the terminating end user's end office, indicating the terminating end user has answered. This measurement ends when the terminating FGC first point of switching receives an on-hook supervisory signal from the terminating end user's end office, indicating the terminating end user has disconnected, or the customer's point of termination, whichever is recognized first by the first point of switching.

For terminating calls over FGC with SS7 signaling, usage measurement begins when the terminating recording switch receives answer supervision from the terminating end user. The Telephone Company switch receives answer supervision and sends the indication to the customer in the form of an answer message. The measurement of terminating FGC call usage ends when the entry switch receives or sends a Release Message, whichever occurs first.

6. Switched Access Service (Cont'd)

6.7 Description and Provision of Feature Group C (FGC) (Cont'd)

6.7.5 Design Blocking Probability

The Telephone Company will design the facilities used in the provision of Switched Access Service FGC to meet the blocking probability criteria as set forth in (A) and (B) following.

(A) For Feature Group C, the design blocking objective will be no greater than one percent (.01) between the point of termination at the customer's designated premises and the first point of switching when traffic is directly routed without an alternate route. Standard traffic engineering methods will be used by the Telephone Company to determine the number of transmission paths required to achieve this level of blocking.

(B) The Telephone Company will perform routine measurement functions to assure that an adequate number of transmission paths are in service. The Telephone Company will recommend that additional capacity (i.e., busy hour minutes of capacity) be ordered by the customer when additional paths are required to reduce the measured blocking to the designed blocking level. For the capacity ordered, the design blocking objective is assumed to have been met if the routine measurements show that the measured blocking does not exceed the threshold listed in the following tables.

6. Switched Access Service (Cont'd)

6.7 Description and Provision of Feature Group C (FGC) (Cont'd)

6.7.5 Design Blocking Probability (Cont'd)

(B) (Cont'd)

(1) For transmission paths carrying only first routed traffic direct between an end office and customer's designated premises without an alternate route, and for paths carrying only overflow traffic, the measured blocking thresholds are as follows:

Number of Transmission Paths Per Trunk Group	Measured Blocking Thresholds in the Time Consistent Busy Hour for the Number of Measurements Taken Between 8:00 a.m. and 11:00 p.m. Per Trunk Group			
	15-20 Measurements	11-14 Measurements	7-10 Measurements	3-6 Measurements
2	7%	8%	9%	14%
3	5%	6%	7%	9%
4	5%	6%	7%	8%
5-6	4%	5%	6%	7%
7 or more	3%	3.5%	4%	6%

(2) For transmission paths carrying first routed traffic between an end office and customer's premises via an access tandem, the measured blocking thresholds are as follows:

Number of Transmission Paths Per Trunk Group	Measured Blocking Thresholds in the Time Consistent Busy Hour for the Number of Measurements Taken Between 8:00 a.m. and 11:00 p.m. Per Trunk Group			
	15-20 Measurements	11-14 Measurements	7-10 Measurements	3-6 Measurements
2	4.5%	5.5%	6.0%	9.5%
3	3.5%	4.0%	4.5%	6.0%
4	3.5%	4.0%	4.5%	5.5%
5-6	2.5%	3.5%	4.0%	4.5%
7 or more	2.0%	2.5%	3.0%	4.0%

6. Switched Access Service (Cont'd)

6.7 Description and Provision of Feature Group C (FGC) (Cont'd)

6.7.6 Testing Capabilities

FGC is provided, in the terminating direction where equipment is available, with seven digit access to balance (100 type) test line, milliwatt (102 type) test line, nonsynchronous or synchronous test line, automatic transmission measuring (105 type) test line, data transmission (107 type) test line, loop around test line, short circuit test line and open circuit test line. In addition to the tests described in 6.2.4 preceding which are included with the installation of service (Acceptance Testing) and as ongoing routine testing, Additional Cooperative Acceptance Testing, Additional Automatic Testing and Additional Manual Testing are available as set forth in 13.3.1 following.

6. Switched Access Service (Cont'd)

6.8 Description and Provision of Feature Group D (FGD)

6.8.1 Description

(A) FGD Access, which is available to all customers, provides trunk side access to Telephone Company end office switches. Special Access Services utilized for connection with FGD at Telephone Company designated WATS Serving offices as set forth in Section 7. following may be ordered separately by a customer other than the customer which orders the FGD Switched Access Service for the provision of WATS or WATS-type services. Special Access Services are ordered as set forth in 5.2 preceding.

(B) FGD is provided at Telephone Company designated end office switches whether routed directly or via Telephone Company designated electronic access tandem switches. The Telephone Company will designate the first point(s) of switching for FGD services where the Telephone Company elects to provide equal access through a centralized equal access arrangement. Those Telephone Company offices providing equal access through centralized arrangements are identified in National Exchange Carrier Association, Inc. Tariff F.C.C. No. 4.

(C) FGD is provided as trunk side switching through the use of end office or access tandem switch trunk equipment. The switch trunk equipment is provided with wink start-pulsing signals and answer and disconnect supervisory signaling.

(D) FGD switching is provided with multifrequency address signaling or out of band SS7 signaling. With multifrequency address signaling and SS7 signaling, up to 12 digits of the called party number dialed by the customer's end user using dual tone multifrequency or dial pulse address signals will be provided by Telephone Company equipment to the customer's premises where the Switched Access Service terminates. Such address signals will be subject to the ordinary transmission capabilities of the Local Transport provided.

6. Switched Access Service (Cont'd)

6.8 Description and Provision of Feature Group D (FGD) (Cont'd)

6.8.1 Description (Cont'd)

(E) FGD switching, when used in the terminating direction, may be used to access valid NXXs in the LATA, time or weather announcement services of the Telephone Company, community information services of an information service provider, and other customers' services (by dialing the appropriate codes) when such services can be reached using valid NXX codes. When directly routed to an end office, only those valid NXX codes served by that office may be accessed. When routed through an access tandem, only those valid NXX codes served by end offices subtending the access tandem may be accessed. The customer will also be billed additional non-access charges for calls to certain community information services, for which rates are applicable under Telephone Company exchange service tariffs, e.g., 976 (DIAL-IT) Network Service. Additionally, non-access charges will also be billed for calls from a FGD trunk to another customer's service in accordance with that customer's applicable service rates when the Telephone Company performs the billing function for that customer. FGD may not be switched, in the terminating direction, to Switched Access Service Feature Groups B, C or D.

6. Switched Access Service (Cont'd)

6.8 Description and Provision of Feature Group D (FGD) (Cont'd)

6.8.1 Description (Cont'd)

(F) The Telephone Company will establish a trunk group or groups for the customer at end office switches or access tandem switches where FGD switching is provided. When required by technical limitations, a separate trunk group will be established for each type of FGD switching arrangement provided. Different types of FGD or other switching arrangements may be combined in a single trunk group at the option of the Telephone Company.

(G) The access code for FGD switching is a uniform access code of the form 10XXX or 101XXXX. A uniform access code(s) will be the assigned number of all FGD access provided to the customer by the Telephone Company. No access code is required for calls to a customer over FGD Switched Access Service if the end user's telephone exchange service is arranged for presubscription to that customer, as set forth in 13.4 following.

Where no access code is required, the number dialed by the customer's end user shall be a seven or ten digit number for calls in the North American Numbering Plan (NANP). For international calls outside the NANP, a seven to twelve digit number may be dialed. The form of the numbers dialed by the customer's end user is NXX-XXXX, 0 or 1 + NXX-XXXX, NPA + NXX-XXXX, 0 or 1 + NPA + NXX-XXXX, and, when the end office is equipped for International Direct Distance Dialing (IDDD), 01 + CC + NN or 011 + CC + NN.

When the 10XXX or 101XXXX access code is used, FGD switching also provides for dialing the digit 0 for access to the customer's operator, 911 for access to the Telephone Company's emergency reporting service, or the end-of-dialing digit (#) for cut-through access to the customer designated premises.

Unless otherwise ordered by the F.C.C., when equal access is provided through a centralized equal access arrangement, the 10XXX or 101XXXX access code may not be available in certain equal access offices. Those offices which provide FGD Switched Access Service without the 10XXX or 101XXXX access code are identified in National Exchange Carrier Association, Inc. Tariff F.C.C. No. 4.

6. Switched Access Service (Cont'd)

6.8 Description and Provision of Feature Group D (FGD) (Cont'd)

6.8.1 Description (Cont'd)

(H) FGD switching will be arranged to accept calls from telephone exchange service locations without the need for dialing the 10XXX or 101XXXX uniform access code. Each telephone exchange service line may be marked with a code to identify which 10XXX or 101XXXX code its calls will be directed to for interLATA service.

(I) Unless prohibited by technical limitations, the customer's Interim NXX Translation and/or 800 Data Base traffic may, at the option of the customer, be combined in the same trunk group arrangement with the customer's non-Interim NXX Translation and/or 800 Data Base traffic. When required by technical limitations, or at the request of the customer, a separate trunk group will be established for Interim NXX Translation and/or 800 Data Base traffic.

(J) When a customer has had FGB access in an end office and subsequently replaces the FGB access with FGD access, at the mutual agreement of the customer and the Telephone Company, the Telephone Company will direct calls dialed by the customer's end users using the customer's previous FGB access code to the customer's FGD access service. The customer must be prepared to handle normally dialed FGD calls, as well as calls dialed with the FGB access code which requires the customer to receive additional address signaling from the end user. Such calls will be rated as FGD. The Telephone Company may, with 90 days' written notice to the customer, discontinue this arrangement.

(K) For FGD switched access service to a Wireless Switching Center (WSC) directly interconnected to a Telephone Company access tandem office, the customer will be billed only the Local Transport premium rate element for the FGD usage. The mileage used to determine the monthly rate for the local transport rate element is as set forth in 6.4.6(G) preceding.

6. Switched Access Service (Cont'd)

6.8 Description and Provision of Feature Group D (FGD) (Cont'd)

6.8.2 Optional Features

Following are the various nonchargeable and chargeable optional features that are available in lieu of, or in addition to, the standard features provided with Feature Group D. Nonchargeable Optional Features are provided as Common Switching, Transport Termination and Local Transport options as set forth in (A) through (C) following. Chargeable optional features are set forth in (D) following.

(A) Common Switching Options

Descriptions of the common switching optional features are set forth in 6.10 following.

(1) Automatic Number Identification (ANI)

(2) Service Class Routing

(3) Alternate Traffic Routing

(4) Trunk Access Limitation

(5) Call Gapping Arrangement

(6) International Carrier Option

(7) Band Advance Arrangement for Use with Special Access Service Utilized in the Provision of WATS or WATS-Type Services

(8) End Office End User Line Service Screening for Use with Special Access Service Utilized in the Provision of WATS or WATS-Type Services

(9) Hunt Group Arrangement for Use with Special Access Service Utilized in the Provision of WATS or WATS-Type Services

(10) Uniform Call Distribution Arrangement for Use with Special Access Service Utilized in the Provision of WATS or WATS-Type Services

(11) Nonhunting Number Associated with Hunt Group Arrangement or Uniform Call Distribution Arrangement for Use with Special Access Service Utilized in the Provision of WATS or WATS-Type Services

(12) Digital Switched 56 Service

(13) Flexible Automatic Number Identification (Flex ANI)

6. Switched Access Service (Cont'd)

6.8 Description and Provision of Feature Group D (FGD) (Cont'd)

6.8.2 Optional Features (Cont'd)

(B) Transport Termination Options

(1) Operator Trunk - Full Feature

The Operator Trunk optional feature is set forth in 6.10.2(C) following.

(C) Local Transport Options

(1) Supervisory Signaling

The Supervisory Signaling optional feature, due to its technical nature, is set forth in 15.1.1 following.

(2) Signaling System 7 (SS7)

The SS7 optional feature allows the customer to send and receive signals for out of band call set up and is available with Feature Group D. This option requires the establishment of a signaling connection between the customer's designated premises/Signaling Point of Interface (SPOI) and a Telephone Company's Signaling Transfer Point (STP).

SS7 is provided in both the originating and terminating direction on FGD and each signaling connection is provisioned for two-way SS7 signaling information.

(3) Multifrequency Address Signaling

(4) Calling Party Number (CPN) Parameter

(5) Charge Number Parameter (CNP)

(6) Carrier Selection Parameter (CSP)

(7) 64 Clear Channel Capability

The 64 Clear Channel Capability optional feature, due to its technical nature, is set forth in 15.1.1 following.

6. Switched Access Service (Cont'd)

6.8 Description and Provision of Feature Group D (FGD) (Cont'd)

6.8.2 Optional Features (Cont'd)

(D) Chargeable Optional Features

(1) Interim NXX Translation

The Interim NXX Translation Optional Feature is set forth in 6.10.3(A) following.

(2) Common Channel Signaling/Signaling System 7 (CCS/SS7) Network Connection Service (CCSNC)

The CCSNC Optional Feature is provided as set forth in 6.10.3 following.

6.8.3 Design and Traffic Routing

For Feature Group D, the Telephone Company shall design and determine the routing of Tandem Switched Transport service, including the selection of the first point of switching and the selection of facilities from the interface to any switching point and to the end offices where busy hour minutes of capacity are ordered. The Telephone Company shall also decide if capacity is to be provided by originating only, terminating only, or two-way trunk groups. Finally, the Telephone Company will decide whether trunk side access will be provided through the use of two-wire or four-wire trunk terminating equipment.

For Feature Group D Direct Trunked Transport service, the Telephone Company will determine the routing of Switched Access Service from the point of interface to the first point of switching or, if the customer specifies one or more hub locations for multiplexing, from the point of interface to the hub location, from one hub location to another hub location, and/or from a hub location to the first point of switching.

6. Switched Access Service (Cont'd)

6.8 Description and Provision of Feature Group D (FGD) (Cont'd)

6.8.3 Design and Traffic Routing (Cont'd)

Selection of facilities and equipment and traffic routing of the service is based on standard engineering methods, available facilities and equipment, and actual traffic patterns. The Telephone Company will designate the first point(s) of switching and routing to be used where equal access is provided through a centralized equal access arrangement. Those Telephone Company offices providing equal access through centralized arrangements are identified in National Exchange Carrier Association, Inc. Tariff F.C.C. No. 4.

6.8.4 Measuring Access Minutes

Customer traffic to end offices will be recorded at end office switches or access tandem switches. Originating and terminating calls will be measured or derived to determine the basis for computing chargeable access minutes. In the event the customer message detail is not available because the Telephone Company lost or damaged tapes or incurred recording system outages, the Telephone Company will estimate the volume of lost customer access minutes of use based on previously known values.

FGD access minutes or fractions thereof, the exact value of the fraction being a function of the switch technology where the measurement is made, are accumulated over the billing period for each end office, and are then rounded up to the nearest access minute for each end office.

Originating Usage

For originating calls over FGD the measured minutes are the chargeable access minutes.

For originating calls over FGD, provided with Multi-Frequency Signaling, usage measurement begins when the originating FGD first point of switching receives the first wink supervisory signal forwarded from the customer's point of termination.

6. Switched Access Service (Cont'd)

6.8 Description and Provision of Feature Group D (FGD) (Cont'd)

6.8.4 Measuring Access Minutes (Cont'd)

Originating Usage (Cont'd)

For originating calls over FGD provided with Signaling System 7 (SS7) Signaling when the FGD end office is not routed through an access tandem for connection to the customer, usage measurement begins when the SS7 Initial Address Message is sent from the Service Switching Point (SSP) to the Signal Transfer Point (STP).

For originating calls over FGD provided with Signaling System 7 (SS7) Signaling when the FGD end office is routed through a tandem for connection to the customer, usage measurement begins when the FGD end office receives the SS7 Exit Message from the tandem.

The measurement of originating call usage over FGD provided with Multi-Frequency Signaling ends when the originating FGD first point of switching receives disconnect supervision from either the originating end user's end office, indicating the originating end user has disconnected, or the customer's point of termination, whichever is recognized first by the first point of switching.

The measurement of originating call usage over FGD provided with SS7 Signaling ends when the originating FGD end office receives an SS7 Release Message indicating either the originating or terminating end user has disconnected.

Terminating Usage

For terminating calls over FGD the chargeable access minutes are either measured or derived.

For terminating calls over FGD provided with MultiFrequency Signaling, where measurement capability exists, the measurement of chargeable access minutes begins when the terminating FGD first point of switching receives answer supervision from the terminating end user's end office, indicating the terminating end user has answered. This measurement ends when the terminating FGD first point of switching receives disconnect supervision from either the terminating end user's end office, indicating the terminating end user has disconnected, or the customer's point of termination, whichever is recognized first by the first point of switching.

6. Switched Access Service (Cont'd)

6.8 Description and Provision of Feature Group D (FGD) (Cont'd)

6.8.4 Measuring Access Minutes (Cont'd)

Terminating Usage (Cont'd)

For terminating calls over FGD, where measurement capability does not exist, terminating FGD usage is derived from originating usage, excluding usage from calls to closed end services or Directory Assistance Services.

For terminating calls over FGD with SS7 signaling, usage measurement begins when the terminating recording switch receives answer supervision from the terminating end user. The Telephone Company switch receives answer supervision and sends the indication to the customer in the form of an answer message. The measurement of terminating FGD call usage ends when the entry switch receives or sends a release message, whichever occurs first.

6.8.5 Design Blocking Probability

The Telephone Company will design the facilities used in the provision of Switched Access Service FGD to meet the blocking probability criteria as set forth in (A) and (B) following.

(A) For Feature Group D, the design blocking objective will be no greater than one percent (.01) between the point of termination at the customer's designated premises and the end office switch, whether the traffic is directly routed without an alternate route or routed via an access tandem. Standard traffic engineering methods as set forth in reference document Telecommunications Transmission Engineering - Volume 3 - Networks and Services (Chapters 6-7) will be used by the Telephone Company to determine the number of transmission paths required to achieve this level of blocking.

(B) The Telephone Company will perform routine measurement functions to assure that an adequate number of transmission paths are in service. The Telephone Company will recommend that additional capacity (i.e., busy hour minutes of capacity or trunks) be ordered by the customer when additional paths are required to reduce the measured blocking to the designed blocking level. For the capacity ordered, the design blocking objective is assumed to have been met if the routine measurements show that the measured blocking does not exceed the threshold listed in the following tables.

6. Switched Access Service (Cont'd)

6.8 Description and Provision of Feature Group D (FGD) (Cont'd)

6.8.5 Design Blocking Probability (Cont'd)

(B) (Cont'd)

(1) For transmission paths carrying only first routed traffic direct between an end office and customer's designated premises without an alternate route, and for paths carrying only overflow traffic, the measured blocking thresholds are as follows:

Number of Transmission Paths Per Trunk Group	Measured Blocking Thresholds in the Time Consistent Busy Hour for the Number of Measurements Taken Between 8:00 a.m. and 11:00 p.m. Per Trunk Group			
	15-20 Measurements	11-14 Measurements	7-10 Measurements	3-6 Measurements
2	7%	8.0%	9%	14.0%
3	5%	6.0%	7%	9.0%
4	5%	6.0%	7%	8.0%
5-6	4%	5.0%	6%	7.0%
7 or more	3%	3.5%	4%	6.0%

(2) For transmission paths carrying first routed traffic between an end office and customer's premises via an access tandem, the measured blocking thresholds are as follows:

Number of Transmission Paths Per Trunk Group	Measured Blocking Thresholds in the Time Consistent Busy Hour for the Number of Measurements Taken Between 8:00 a.m. and 11:00 p.m. Per Trunk Group			
	15-20 Measurements	11-14 Measurements	7-10 Measurements	3-6 Measurements
2	4.5%	5.5%	6.0%	9.5%
3	3.5%	4.0%	4.5%	6.0%
4	3.5%	4.0%	4.5%	5.5%
5-6	2.5%	3.5%	4.0%	4.5%
7 or more	2.0%	2.5%	3.0%	4.0%

6. Switched Access Service (Cont'd)

6.8 Description and Provision of Feature Group D (FGD) (Cont'd)

6.8.6 Network Blocking Charge

The customer will be notified by the Telephone Company to increase its capacity (busy hour minutes of capacity or quantities of trunks) when excessive trunk group blocking occurs on groups carrying Feature Group D traffic and the measured access minutes for that hour exceed the capacity purchased. Excessive trunk group blocking occurs when the blocking thresholds stated below are exceeded. They are predicated on time consistent, hourly measurements over a 30 day period excluding Saturdays, Sundays and national holidays. If the order for additional capacity has not been received by the Telephone Company within 15 days of the notification, the Telephone Company will bill the customer, at the rate set forth in Section 17 following, for each overflow in excess of the blocking threshold when (1) the average "30 day period" overflow exceeds the threshold level for any particular hour and (2) the "30 day period" measured average originating or two-way usage for the same clock hour exceeds the capacity purchased.

	Blocking Thresholds	
Trunks in Service	1%	1/2%
1-2	7.0%	4.5%
3-4	5.0%	3.5%
5-6	4.0%	2.5%
7 or greater	3.0%	2.0%

The 1% blocking threshold is for transmission paths carrying traffic direct (without an alternate route) between an end office and a customer's premises. The 1/2% blocking threshold is for transmission paths carrying first routed traffic between an end office and a customer's premises via an access tandem.

6. Switched Access Service (Cont'd)

6.8 Description and Provision of Feature Group D (FGD) (Cont'd)

6.8.7 Testing Capabilities

FGD is provided, in the terminating direction where equipment is available, with seven digit access to balance (100 type) test line, milliwatt (102 type) test line, nonsynchronous or synchronous test line, automatic transmission measuring (105 type) test line, data transmission (107 type) test line, loop around test line, short circuit test line and open circuit test line. In addition to the tests described in 6.2.4 preceding, which are included with the installation of service (Acceptance Testing) and as ongoing routine testing, Additional Cooperative Acceptance Testing, Additional Automatic Testing and Additional Manual Testing, are available as set forth in 13.3.1 following.

When SS7 Signaling is ordered, network compatibility and other testing will be performed cooperatively by the Telephone Company and the customer as specified in Technical References TR-TSV 000905.

6.9 Reserved For Future Use

6.10 Chargeable and Nonchargeable Optional Features

Following are descriptions of the various optional features that are available in lieu of, or in addition to, the standard features provided with the Feature Groups. They are provided as Common Switching, Transport Termination or Interim NXX options. Local Transport options associated with Common Channel Signaling Network Connection Service (CCSNC) are described in 6.10.1 following. All other Local Transport options, due to their technical nature, are described in 15.1.1 following.

6. Switched Access Service (Cont'd)

6.10 Chargeable and Nonchargeable Optional Features (Cont'd)

6.10.1 Common Switching Nonchargeable Optional Features

The following table shows the Feature Groups with which the optional features are available.

	Option	Available Feature Groups A	B	C	D
A)	Call Denial on Line or Hunt Group				X
B)	Service Code Denial on Line or Hunt Group	X			
C)	Hunt Group Arrangement	X			
D)	Uniform Call Distribution Arrangement	X			
E)	Nonhunting Number for Use with Hunt Group or Uniform Call Distribution Arrangement	X			
F)	Automatic Number Identification (ANI)		X	X	X
G)	Up to 7 Digit Outpulsing of Access Digits to Customer		X		
H)	Delay Dial Start-Pulsing Signaling			X	
I)	Immediate Dial Pulse Address Signaling			X	
J)	Dial Pulse Address Signaling		X		
K)	Service Class Routing		X	X	
L)	Alternate Traffic Routing		X	X	X
M)	Trunk Access Limitation			X	X
N)	Call Gapping Arrangement				X
O)	International Carrier Option				X
P)	Band Advance Arrangement for Use with Special Access Service Utilized in the Provision of WATS or WATS-Type Services	X	X	X	X
Q)	End Office End User Line Service Screening for Use with Special Access Service Utilized in the Provision of WATS or WATS-Type Services		X	X	
R)	Hunt Group Arrangement for Use with Special Access Service Utilized in the Provision of WATS or WATS-Type Services	X	X	X	X
S)	Uniform Call Distribution Arrangement for Use with Special Access Service Utilized in the Provision of WATS or WATS-Type Services	X	X	X	X
T)	Nonhunting Number Associated with Hunt Group Arrangement or Uniform Call Distribution Arrangement for Use with Special Access Service Utilized in the Provision of WATS or WATS-Type Services	X	X	X	X
U)	Digital Switched 56 Service			X	X
V)	Multifrequency Address Signaling			X	X
W)	Signaling System 7 (SS7) Signaling		X	X	
X)	Calling Party Number (CPN)			X	X
Y)	Carrier Selection Parameter (CSP)				X
Z)	Charge Number Parameter (CNP)			X	X
AA)	Flexible Automatic Number Identification (Flex ANI)				X

6. Switched Access Service (Cont'd)

6.10 Chargeable and Nonchargeable Optional Features (Cont'd)

6.10.1 Common Switching Nonchargeable Optional Features (Cont'd)

(A) Call Denial on Line or Hunt Group

This option allows for the screening of terminating Feature Group A calls. There are two screening arrangements available with this option as follows: 1) limiting terminating calls for completion to only 411 or 555-1212 whichever is available, 611, 911, 800 series and a Telephone Company specified set of NXXs within the Telephone Company local exchange calling area of the dial tone office in which the arrangement is provided or, 2) limiting terminating calls to completion to only the NXXs associated with all end offices in the LATA, i.e., the call cannot be further switched or routed out of the LATA nor will calls be completed to 411 or 555-1212 whichever is available, 611, 911 or 800 series. All other calls are routed to a reorder tone or recorded announcement. Arrangement 1 is provided in all Telephone Company electronic end offices and, where available, in electromechanical end offices. Arrangement 2 is provided where available. This feature is available with Feature Group A.

(B) Service Code Denial on Line or Hunt Group

This option allows for the screening of terminating calls within the LATA, and for disallowing completion of calls to 0-, 555 and N11 (e.g., 411, 611, and 911). This feature is provided where available in all Telephone Company end offices. It is available with Feature Group A.

6. Switched Access Service (Cont'd)

6.10 Chargeable and Nonchargeable Optional Features (Cont'd)

6.10.1 Common Switching Nonchargeable Optional Features (Cont'd)

(C) Hunt Group Arrangement

This option provides the ability to sequentially access one of two or more line side connections in the originating direction, when the access code of the line group is dialed. This feature is provided in all Telephone Company end offices. It is available with Feature Group A. All Feature Group A access services in the same hunt group must provide off-hook supervisory signaling from the same point in time in the call sequence i.e., all off-hook supervisory signals must either be provided by the customer's equipment before the called party answers or all must be forwarded by the customer's equipment when the called party answers.

(D) Uniform Call Distribution Arrangement

This option provides a type of multiline hunting arrangement which provides for an even distribution of calls among the available lines in a hunt group. Where available, this feature is provided in Telephone Company electronic end offices only. It is available with Feature Group A.

(E) Nonhunting Number for Use with Hunt Group or Uniform Call Distribution Arrangement

This option provides access to an individual line within a multiline hunt or uniform call distribution group. When the nonhunting number is dialed, access is provided when it is idle, or busy tone is provided when it is busy. Where available, this feature is provided in Telephone Company electronic end offices only. It is available with Feature Group A.

6. Switched Access Service (Cont'd)

6.10 Chargeable and Nonchargeable Optional Features (Cont'd)

6.10.1 Common Switching Nonchargeable Optional Features (Cont'd)

(F) Automatic Number Identification (ANI)

(1) This option provides the automatic transmission of a seven digit or ten digit number and information digits to the customer designated premises for calls originating in the LATA, to identify the calling station. The ANI feature is an end office software function which is associated on a call-by-call basis with:

(a) all individual transmission paths in a trunk group routed directly between an end office and a customer designated premises or, where technically feasible, with

(b) all individual transmission paths in a trunk group between an end office and an access tandem, and a trunk group between an access tandem and a customer designated premises.

(2) The seven digit ANI telephone number is generally available with Feature Groups B and C. With these Feature Groups, technical limitations may exist in Telephone Company switching facilities which require ANI to be provided only on a directly trunked basis. ANI will be transmitted on all calls except those originating from multiparty lines, pay telephones using Feature Group B, or when an ANI failure has occurred. Seven digit ANI is not available with SS7 Signaling.

(3) The ten digit ANI telephone number is only available with Feature Group D. The ten digit ANI telephone number consists of the Number Plan Area (NPA) plus the seven digit ANI telephone number. The ten digit ANI telephone number will be transmitted on all calls except those identified as multiparty line or ANI failure, in which case only the NPA will be transmitted (in addition to the information digit described below). Ten digit ANI is provided with multifrequency address signaling or SS7 signaling.

(4) With Feature Group C, at the option of the customer, ANI may be ordered from end offices where Telephone Company recording for end user billing is not provided. Additionally, ANI is provided from end offices where message detail recording is not required by the Telephone Company; as with 800 series service. ANI is not provided from end offices where the Telephone Company forwards ANI to its recording equipment.

6. Switched Access Service (Cont'd)

6.10 Chargeable and Nonchargeable Optional Features (Cont'd)

6.10.1 Common Switching Nonchargeable Optional Features (Cont'd)

(F) Automatic Number Identification (ANI) (Cont'd)

(5) Where complete ANI detail cannot be provided, e.g., on calls from 4 and 8 party services, information digits will be provided to the customer.

The information digits identify:

(a) telephone number is the station billing number - no special treatment required,

(b) multiparty line - telephone number is a 4- or 8- party line and cannot be identified - number must be obtained via an operator or in some other manner,

(c) ANI failure has occurred in the end office switch which prevents identification of calling telephone number - must be obtained by operator or in some other manner,

(d) hotel/motel originated call which requires room number identification,

(e) coinless station, hospital, inmate, etc. call which requires special screening or handling by the customer, and

(f) call is an Automatic Identified Outward Dialed (AIOD) call from customer premises equipment. The AIOD ANI telephone number is the listed telephone number of the customer and is not the telephone number of the calling party.

These ANI information digits are generally available with Feature Groups B, C, and D.

6. Switched Access Service (Cont'd)

6.10 Chargeable and Nonchargeable Optional Features (Cont'd)

6.10.1 Common Switching Nonchargeable Optional Features (Cont'd)

(F) Automatic Number Identification (ANI) (Cont'd)

(6) Additional ANI information digits are available with Feature Group D also. They include:

(a) InterLATA restricted - telephone number is identified line
(b) InterLATA restricted - hotel/motel line
(c) InterLATA restricted - coinless, hospital, inmate, etc., line

These information digits will be transmitted as agreed to by the customer and the Telephone Company.

Flexible Automatic Number Identification (Flex ANI) is an enhancement to ANI and is offered as a Common Switching Nonchargeable Optional Feature of Feature Group D as described in 6.10.1(AA) following.

(7) Restrictions on Use and Sale of ANI

(a) Interstate access customers of this tariff may use ANI in the following manner:

(i) For billing and collection information, for routing, screening, and completing the originating subscriber's call or transaction, or for services directly related to the originating telephone subscriber's call or transaction.

The customer may use ANI to offer a product or service that is directly related to the products or services previously acquired from the customer by the originating subscriber.

(b) Interstate access customers of this tariff may not use ANI in the following manner:

(i) Reusing or selling the telephone number or billing information without first notifying the originating telephone subscriber and obtaining the affirmative consent of such subscriber for such reuse or sale.

(ii) Disclosing (except as permitted in (a), preceding), any information derived from the ANI for any purpose other than 1) performing the services or transactions that are the subject of the originating subscriber's call, 2) ensuring network performance security and the effectiveness of call delivery, 3) compiling, using, and disclosing aggregate information, and 4) complying with applicable law or legal process.

6. Switched Access Service (Cont'd)

6.10 Chargeable and Nonchargeable Optional Features (Cont'd)

6.10.1 Common Switching Nonchargeable Optional Features (Cont'd)

(G) Up to 7 Digit Outpulsing of Access Digits to Customer

This option provides for the end office capability of providing up to 7 digits of the uniform access code (950-XXXX) to the customer designated premises.

The customer can request that only some of the digits in the access code be forwarded. The access code digits would be provided to the customer designated premises using multifrequency signaling, and transmission of the digits would precede the forwarding of ANI if that feature were provided. This feature is available with Feature Group B.

(H) Delay Dial Start-Pulsing Signaling

Where available, this option provides a method of indicating to the near end trunk circuit readiness to accept address signaling information by the far end trunk circuit. Delay dial is often referred to as an off-hook, on-hook signaling sequence. The delay dial signal is the off-hook interval and the start-pulsing signal is the on-hook interval. With integrity check, the calling office will not outpulse until a delay dial (off-hook) signal followed by a start-pulsing (on-hook) signal has been identified at the calling office. This option is available with Feature Group C.

(I) Immediate Dial Pulse Address Signaling

Where available, this option provides for the forwarding of dial pulses from the Telephone Company end office to the customer without the need of a start-pulsing signal from the customer. It is available with Feature Group C.

(J) Dial Pulse Address Signaling

Where available, this trunk side option provides for the transmission of number information, e.g., called number, between the end office switching system and the customer designated premises (in either direction) by means of direct current pulses. It is available with Feature Group C.

6. Switched Access Service (Cont'd)

6.10 Chargeable and Nonchargeable Optional Features (Cont'd)

6.10.1 Common Switching Nonchargeable Optional Features (Cont'd)

(K) Service Class Routing

This option provides the capability of directing originating traffic from an end office to a trunk group to a customer designated premises, based on the line class of service (e.g., coin, multiparty or hotel/motel), service prefix indicator (e.g., 0-, 0+, 01+ or 011+) or Service Access Code (e.g., 900). It is provided in suitably equipped end office or access tandem switches. It is available with Feature Groups C and D.

(L) Alternate Traffic Routing

When the customer orders both Direct Trunked Transport and Tandem Switched Transport at the same end office, this option provides the capability of directing originating traffic from an end office (or appropriately equipped access tandem) to a trunk group (the "high usage" group) to a customer designated premises until that group is fully loaded, and then delivering additional originating traffic (the "overflowing" traffic) from the same end office or access tandem to a different trunk group (the "final" group) to a second customer designated premises. The customer shall specify the last trunk CCS desired for the high usage group. It is provided in suitably equipped end office or access tandem switches. It is available with Feature Groups B, C and D.

(M) Trunk Access Limitation

This option provides for the routing of originating 900 service calls to a specified number of transmission paths in a trunk group, in order to limit (choke) the completion of such traffic to the customer. Calls to the designated service which could not be completed over the subset of transmission paths in the trunk group, i.e., the choked calls, would be routed to reorder tone. It is provided in all Telephone Company electronic end offices and where available in electromechanical end offices. It is available with Feature Groups C and D.

(N) Call Gapping Arrangement

This option, provided in suitably equipped end office switches, provides for the routing of originating calls to 900 service to be switched in the end office to all transmission paths in a trunk group at a prescribed rate of flow, e.g., one call every five seconds, in order to limit (choke) the completion of such traffic to the customer. Calls to the designated service which are denied access by this feature, i.e., the choked calls, would be routed to a no-circuit announcement. It is provided in selected Feature Group D equipped end offices and is available only with Feature Group D.

6. Switched Access Service (Cont'd)

6.10 Chargeable and Nonchargeable Optional Features (Cont'd)

6.10.1 Common Switching Nonchargeable Optional Features (Cont'd)

(O) International Carrier Option

This option allows for Feature Group D end offices or access tandem switches equipped for International Direct Distance Dialing to be arranged to forward the international calls of one or more international carriers to the customer (i.e., the Telephone Company is able to route originating international calls to a customer other than the one designated by the end user either through presubscription or 10XXX or 101XXXX dialing). This arrangement requires provision of written verification to the Telephone Company that the customer is authorized to forward such calls. The written verification must be in the form of a letter of agency authorizing the customer to order the option on behalf of the international carrier. This option is only provided at Telephone Company end offices or access tandems equipped for International Direct Distance Dialing and is available only with Feature Group D.

(P) Band Advance Arrangement for Use with Special Access Service Utilized in the Provision of WATS or WATS-Type Services

This option, which is provided in association with two or more Special Access Service groups, provides for the automatic overflow of terminating calls to a second Special Access Service group, when the first group has exceeded its call capacity. This option is available with Feature Groups A, B, C and D.

(Q) End Office End User Line Service Screening for Use with Special Access Service Utilized in the Provision of WATS or WATS-Type Services

This option provides the ability to verify that an end user has dialed a called party address (by screening the called NPA and/or NXX on the basis of geographical bands selected by the Telephone Company) which is in accordance with that end user's service agreement with the customer, e.g., WATS. This option is provided in all Telephone Company electronic end offices and, where available, in electromechanical end offices which are designated as WATS Serving Offices. It is available with Feature Groups C and D.

6. Switched Access Service (Cont'd)

6.10 Chargeable and Nonchargeable Optional Features (Cont'd)

6.10.1 Common Switching Nonchargeable Optional Features (Cont'd)

(R) Hunt Group Arrangement for Use with Special Access Service Utilized in the Provision of WATS or WATS-Type Services

This option provides the ability to sequentially access one of two or more Special Access Services utilized in the provision of WATS services (e.g., 800 Series Service Special Access services) in the terminating direction, when the hunting number of the Special Access Service group is forwarded from the customer to the Telephone Company. This feature is provided in all Telephone Company designated WATS Serving Offices. It is available with Feature Groups A, B, C and D.

(S) Uniform Call Distribution Arrangement for Use with Special Access Service Utilized in the Provision of WATS or WATS-Type Services

This option provides a type of multiline hunting arrangement which provides for an even distribution of terminating calls among the available Special Access Services utilized in the provision of WATS or WATS-type Services in the hunt group. Where available, this feature is only provided in Telephone Company designated WATS Serving Offices. It is available with Feature Groups A, B, C and D.

(T) Nonhunting Number Associated with Hunt Group Arrangement or Uniform Call Distribution Arrangement for Use with Special Access Service Utilized in the Provision of WATS or WATS-Type Services

This option provides an arrangement, for an individual Special Access Service utilized in the provision of WATS or WATS-type Services within a multiline hunt or uniform call distribution group, that provides access to that Special Access Service within the hunt or uniform call distribution group when it is idle or provides busy tone when it is busy, when the nonhunting number is dialed, without hunting to the next idle number. Where available, this feature is only provided in Telephone Company designated WATS Serving Offices. It is available with Feature Groups A, B, C and D.

(U) Digital Switched 56 Service

This option provides for a connection between a customer's premise and a suitably equipped end user's premise which uses end office switching and facilities capable of transmitting digital data up to 56 Kilobits per second. Digital Switched 56 Service is only available in appropriately provisioned Feature Group C and Feature Group D offices as set forth in National Exchange Carrier Association, Inc. Tariff F.C.C. No. 4.

6. Switched Access Service (Cont'd)

6.10 Chargeable and Nonchargeable Optional Features (Cont'd)

6.10.1 Common Switching Nonchargeable Optional Features (Cont'd)

(V) Multifrequency Address Signaling

Multifrequency Address Signaling is available as an optional feature with FGC and FGD. This feature provides for the transmission of number information and control signals (e.g., number address signals, automatic number identification) between the end office switch and the customer's premises (in either direction). Multifrequency signaling arrangements make use of pairs of frequencies out of a group of six frequencies. Specific information transmitted is dependent upon feature group and call type (i.e., POTS, coin or operator). This feature is not available in combination with SS7 signaling.

(W) Signaling System 7 (SS7) Signaling

This feature provides common channel out of band transmission of address and supervisory SS7 protocol signaling information between the end office switch or the tandem office switching system and the customer's designated premises. The signaling information is transmitted over facilities provided with the Common Channel Signaling/Signaling System 7 Network Connection Service (CCSNC) as specified in 6.1.3(A)(8) preceding. This feature is available with FGC and FGD and will be provided in accordance with the SS7 Interconnect specifications described in Technical Reference TR-TSV-000905.

(X) Calling Party Number (CPN)

This feature provides for the automatic transmission of the ten digit telephone number, associated with a calling station, to the customer's premises for calls originating in the LATA. The ten digit telephone number consists of the NPA plus the seven digit telephone number, which may or may not be the same number as the calling station's charge number. The ten digit telephone number will be coded as presented, or restricted via a "privacy indicator" for delivery to the called end user. This feature is automatically provided with originating FGC and FGD with SS7 signaling. CPN is available where technically feasible.

6. Switched Access Service (Cont'd)

6.10 Chargeable and Nonchargeable Optional Features (Cont'd)

6.10.1 Common Switching Nonchargeable Optional Features (Cont'd)

(X) Calling Party Number (CPN) (Cont'd)

(1) Restrictions on Use and Sale of CPN

(a) Interstate access customers of this tariff may use CPN in the following manner:

(i) For billing and collection information, for routing, screening, and completing the originating subscriber's call or transaction, or for services directly related to the originating telephone subscriber's call or transaction.

The customer may use CPN to offer a product or service that is directly related to the products or services previously acquired from the customer by the originating subscriber.

(b) Interstate access customers of this tariff may not use CPN in the following manner:

(i) Reusing or selling the telephone number or billing information without first notifying the originating telephone subscriber and obtaining the affirmative consent of such subscriber for such reuse or sale.

(ii) Disclosing (except as permitted in (a), preceding) any information derived from the CPN for any purpose other than 1) performing the services or transactions that are the subject of the originating subscriber's call, 2) ensuring network performance security and the effectiveness of call delivery, 3) compiling, using, and disclosing aggregate information, and 4) complying with applicable law or legal process.

6. Switched Access Service (Cont'd)

6.10 Chargeable and Nonchargeable Optional Features (Cont'd)

6.10.1 Common Switching Nonchargeable Optional Features (Cont'd)

(Y) Carrier Selection Parameter (CSP)

This feature provides for the automatic transmission of a signaling indicator which signifies to the customer whether or not the call being processed originated from a presubscribed line. If the line was presubscribed, the indicator will signify if the end user did or did not dial 10XXX or 101XXXX. This feature is provided with originating FGD with SS7 signaling.

(Z) Charge Number Parameter (CNP)

(1) The CNP is equivalent to the existing ten digit Automatic Number Identification (ANI) available with FGC where technically feasible and FGD with MF signaling. The CNP provides for the automatic transmission of the ten digit billing number of the calling station and the originating line information. This feature is provided with originating FGC and FGD with SS7 signaling.

(2) Restrictions on Use and Sale of CNP

(a) Interstate access customers of this tariff may use CNP in the following manner:

(i) For billing and collection information, for routing, screening and completing the originating subscriber's call or transaction, or for services directly related to the originating telephone subscriber's call or transaction.

The customer may use CNP to offer a product or service that is directly related to the products or services previously acquired from the customer by the originating subscriber.

6. Switched Access Service (Cont'd)

6.10 Chargeable and Nonchargeable Optional Features (Cont'd)

6.10.1 Common Switching Nonchargeable Optional Features (Cont'd)

(Z) Charge Number Parameter (CNP) (Cont'd)

(2) Restrictions on Use and Sale of CNP (Cont'd)

(b) Interstate access customers of this tariff may not use CNP in the following manner:

(i) Reusing or selling the telephone number or billing information without first notifying the originating telephone subscriber and obtaining the affirmative consent of such subscriber for such reuse or sale.

(ii) Disclosing, except as permitted in (a), preceding, any information derived from the CNP for any purpose other than 1) performing the services or transactions that are the subject of the originating subscriber's call, 2) ensuring network performance security and the effectiveness of call delivery, 3) compiling, using, and disclosing aggregate information, and 4) complying with applicable law or legal process.

(AA) Flexible Automatic Number Identification (Flex ANI)

Flex ANI is a Common Switching Optional Feature that enhances the existing Automatic Number Identification (ANI) optional feature (described in 6.10.1 (F) preceding) by allowing Feature Group D (FGD) customers to receive additional information digits. Flex ANI provides additional values for these information digits over and above the values currently available with ANI and is used to identify additional call types, e.g., calls originating from LEC payphones, competitive payphones, and private virtual networks. Flex ANI can be used to provide Originating Line Screening (OLS) service. OLS service is described in 13.10 following.

Flex ANI information digits are two digits in length and are activated through switched software program updates. These codes precede the 10-digit directory number of the calling line and are part of the signaling protocol in equal access end offices. The information digits are outpulsed by the switching system along with the directory number from the originating end office and are sent to the receiving office for billing, routing, or special handling purposes.

Customers who have ANI but do not order Flex ANI, will continue to receive the information digits associated with ANI. Flex ANI digits are assigned by the North American Numbering Plan Administrator. The Telephone Company will make available those information digits that are mutually agreed to by the customer and the Telephone Company.

Flex ANI is available to customers with FGD Switched Access Service equipped with ANI. Flex ANI is available in suitably equipped end offices as identified in National Exchange Carrier Association, Inc. Tariff F.C.C. No. 4.

6. Switched Access Service (Cont'd)

6.10 Chargeable and Nonchargeable Optional Features (Cont'd)

6.10.1 Common Switching Nonchargeable Optional Features (Cont'd)

(AB) Carrier Identification Parameter (CIP)

Carrier Identification Parameter is available as an optional feature provided in conjunction with originating FGD with SS7 Out of Band Signaling. CIP provides for the transmission of the Carrier Identification Code (CIC) or the access code 101XXXX to the customer with the Initial Address Message (IAM). CIP is available with originating FGD in suitably equipped end offices and access tandems. CIP will be populated by a 4-digit CIC.

The Telephone Company will make every effort to maintain CIP information, equipment and facilities in a format which facilitates the customer's use of the CIP offering. Changes (i.e., technology, customer account makeup, etc.) can occur affecting such information, however, and the Telephone Company cannot guarantee that the CIP equipment and facilities will be completely capable of processing CIP data at all times. Accordingly, the Telephone Company shall not be liable for any incidental, indirect, special or consequential damages (including lost revenue or profits) of any kind, resulting from inaccuracy of CIP data and/or the inability of its equipment and facilities to process CIP data.

6. Switched Access Service (Cont'd)

6.10 Chargeable and Nonchargeable Optional Features (Cont'd)

6.10.1 Common Switching Nonchargeable Optional Features (Cont'd)

(AB) Carrier Identification Parameter (CIP) (Cont'd)

The monthly recurring rate is applicable per channel. The nonrecurring charge is applicable per CIC, per trunk group. The nonrecurring charge has two rate levels. There is a nonrecurring charge applicable to trunk groups direct to the access tandem and a nonrecurring charge applicable to trunk groups direct to an end office.

6. Switched Access Service (Cont'd)

6.10 Chargeable and Nonchargeable Optional Features (Cont'd)

6.10.2 Transport Termination Nonchargeable Optional Features

(A) Rotary Dial Station Signaling

This option provides for the transmission of called party address signaling from rotary dial stations to the customer designated premises for originating calls. This option is provided in the form of a specific type of Transport Termination. It is available with Feature Group B, only on a directly trunked basis.

(B) Operator Trunk - Coin, Non-Coin, or Combined Coin and Non-Coin

This option may be ordered to provide coin, non- coin, or combined coin and non-coin operation. It is available only with Feature Group C and is provided in electronic end offices and other Telephone Company end offices where equipment is available. It is provided as a trunk type of Transport Termination.

Coin, Non-Coin:

This arrangement provides for initial coin return control, except in the case of non-coin, and routing of 0+, 0-, 1+, 01+ or 011+ prefixed originating coin and non-coin calls requiring operator assistance to the customer designated premises. Because operator assisted coin calling traffic is routed over a trunk group dedicated to operator assisted calls, this arrangement is only provided in association with the Service Class Routing option.

This arrangement is normally ordered by the customer in conjunction with the ANI optional feature, since the preponderance of trunk groups equipped with this arrangement will be terminated in the customer's automated operator services systems, rather than in the customer's manual cord boards.

6. Switched Access Service (Cont'd)

6.10 Chargeable and Nonchargeable Optional Features (Cont'd)

6.10.2 Transport Termination Nonchargeable Optional Features

(B) Operator Trunk - Coin, Non-Coin, or Combined Coin and Non-Coin (Cont'd)

Combined Coin and Non-Coin:

When so equipped, the ANI optional feature provides for the forwarding of information digits which identify that the call has originated from a hotel or motel, and whether room number identification is required, or that special screening is required, e.g., for coinless pay telephones, dormitory or inmate stations, or other screening arrangements agreed to between the customer and the Telephone Company.

(C) Operator Trunk - Full Feature

This option provides the initial coin return control function to the customer's operator. It is available with Feature Group D and is provided as a trunk type for Transport Termination. This feature is not available with SS7 signaling.

6. Switched Access Service (Cont'd)

6.10 Chargeable and Nonchargeable Optional Features (Cont'd)

6.10.3 Chargeable Optional Features

(A) Interim NXX Translation

This service is an originating offering utilizing trunk side Switched Access Service and provides a customer identification function based on the dialed SAC and NXX code.

For example, when a 1+900+NXX-XXXX call is originated by an end user, the Telephone Company will perform the customer identification function based on the dialed digits to determine the customer location to which the call is to be routed. If the call originates from an end office switch not equipped to provide the customer identification function, the call will be routed to an office at which the function is available. Once customer identification has been established, the call will be routed to that customer. Calls originating from an end office switch at which the customer identification function is performed, but to which the customer has not ordered Interim NXX Translation, will be blocked.

Calls to a 900 number dialed via 1+ from coin telephones, 0-, 10XXX or 101XXXX, Inmate Service, and Hotel/Motel Service will be blocked. Calls to a 900 number dialed via 0+ will normally be blocked. Orders received from customers to unblock 0+ calls to a 900 number will be accommodated where suitably equipped facilities exist.

The manner in which Interim NXX Translation is provided is dependent on the status of the end office from which the service is provided (i.e., equipped with equal access capabilities or not equipped with equal access capabilities). When Interim NXX Translation is provided from an end office not equipped with equal access capabilities, it will be provided in conjunction with FGC Switched Access Service.

The charge for Interim NXX Translation is as set forth in Section 17 following.

6. Switched Access Service (Cont'd)

6.10 Chargeable and Nonchargeable Optional Features (Cont'd)

6.10.3 Chargeable Optional Features (Cont'd)

(B) Common Channel Signaling/Signaling System 7 Network Connection Service (CCSNC)

Common Channel Signaling/Signaling System 7 (CCS/SS7) Network Connection Service (CCSNC), which is available with Feature Group C and D, where technically feasible as designated in National Exchange Carrier Association, Inc. Tariff F.C.C. No. 4, Wire Center Information, provides a signaling path between a customer's designated Signaling Point of Interface (SPOI) and a Signaling Transfer Point (STP). This service provides customers with the use of a two-way signaling path for accessing information necessary for the completion of their end user's calls.

CCS/SS7 Network Connection Service is comprised of two parts; a Signaling Network Access Link (SNAL, consisting of Signaling Mileage Facility, Signaling Mileage Termination and Signaling Entrance Facility) and a Signaling Transfer Point (STP) Port. The SNAL is provided as a dedicated 56 Kbps out-of-band signaling connection between the customer's SPOI and the STP Port on the STP.

The CCS/SS7 Network Connection Service is provisioned by a mated pair of STPs as described in Technical Reference TR-TSV 000905 in order to ensure network availability and reliability. The Telephone Company shall not be held liable for service outages if the customer employs technology related to the interconnection of signaling networks that do not adhere to generally accepted industry technical standards.

When CCS/SS7 Network Connection service is provisioned for use with SS7 Signaling, interconnection between signaling networks must occur at an STP.

Rates and charges for the CCS/SS7 Network Connection STP Ports and Signaling Network Access Links are contained in 17.2.2 following.

6. Switched Access Service (Cont'd)

6.10 Chargeable and Nonchargeable Optional Features (Cont'd)

6.10.3 Chargeable Optional Features (Cont'd)

(C) 800 Data Base Access Service

800 Data Base Access Service is provided with FGC or FGD Switched Access Service. When a 1+800series+NXX-XXXX call is originated by an end user, the Telephone Company will utilize the Signaling System 7 (SS7) network to query an 800 data base to perform the identification function. The call will then be routed to the identified customer over FGC or FGD switched access. The 800 series includes the following service area codes: 800, 888, 877, 866, 855, 844, 833 and 822.

The manner in which 800 data base access service is provided is dependent on the availability of SS7 service at the end office from which the service is provided as outlined following:

- When 800 data base access service originates at an end office equipped with Service Switching Point (SSP) capability for querying centralized data bases or at a non-SSP equipped end office that can accommodate direct trunking of originating 800 series calls, all such service will be provisioned from that end office.

- When 800 data base access service originates at an end office not equipped with SSP customer identification capability, the 800 series call will be delivered to the access tandem on which the end office is homed for 800 series service and which is equipped with the SSP feature to query centralized data bases.

- When 800 data base access service originates at an end office equipped with SSP capability that is not capable of accommodating direct trunking of originating 888 calls, the 888 call will be delivered to the access tandem on which the end office is homed and which is equipped with the SSP feature to query centralized data bases.

Query charges as set forth in Section 17 following are in addition to those charges applicable for the Feature Group C or Feature Group D switched access service.

6. Switched Access Service (Cont'd)

6.11 Applications

6.11.1 Reserved For Future Use

6.11.2 Tandem Switch Signaling (TSS)

TSS will be provided via FGD or BSA-D Switched Access, 500 SAC Access, or 900 SAC Access services with either multifrequency (MF) address signaling or SS7 Out of Band Signaling. TSS is available with originating calling only, terminating calling only, or, where available, two-way calling trunks. TSS two-way calling trunks are only available from end offices where the switch technology is capable of measuring the terminating usage on two-way TSS equipped trunks. Where the end office switch technology is not capable of measuring terminating usage on two-way calling TSS equipped trunks, the customer must order originating calling only and/or terminating calling only trunks for use with TSS.

Switched Access connections to the customer's access tandem location(s) shall be via Direct-Trunked Transport, Entrance Facility, and/or a customer's transmission equipment and facilities using DS1 or DS3 Cross Connect arrangement where the customer is provided Expanded Interconnection Service as described in Section 17. The Switched Access Entrance Facility provides the facility, including interface arrangement, between the point of termination at the customer designated location and the Telephone Company's serving wire center. Direct-Trunked Transport provides the interoffice facilities dedicated to a single customer between the serving wire center and end offices. TSS is not available via a Telephone Company access tandem. The facilities ordered by the customer for connectivity from the customer's access tandem to an IC's CDL is provided via Special Access facilities as described in Section 7.

- For originating usage the owner of the carrier identification code will be billed for all usage.

- For terminating usage all associated Switched Access charges are the responsibility of the TSS customer. At the TSS customer's request, the Telephone Company will bill each of the TSS customer's users directly for their respective usage, if the TSS customer agrees to furnish the Telephone Company, free of charge, the call detail information necessary to bill its users. This call detail information must be provided daily for the previous day's usage in industry standard format (i.e., 1101-20 Expanded Message Record format with end office level detail). The information must be provided by either electronic transmission or magnetic tape as specified by the Telephone Company.

6. Switched Access Service (Cont'd)

6.11 Applications

6.11.3 Dedicated Trunk Port

A Dedicated Trunk Port is applicable to the purchase of dedicated trunks terminated by that port. The Dedicated Trunk Port provides for the termination of a dedicated trunk at the end office or access tandem. The Dedicated Trunk Port is a flat rated charge assessed on a per channel basis. The rate is determined based on whether the trunk is voice grade or DS1.

A Dedicated Trunk Port charge shall be assessed on a per voice grade or DS1 channel terminating at an end office or access tandem.

6.11.4 Shared Trunk Port

The Shared Trunk Port provides for the termination of a Tandem-Switched Trunk at an end office. The Shared Trunk Port is usage rated and shall be assessed to all access minutes which utilize Tandem-Switched Transport. This includes minutes of use associated with FGA service when traffic is terminated in an end office that is not the dial tone office and on minutes of use provided at a remote office.

The Shared Trunk Port charge does not apply to switched access minutes of use that originate or terminate at MTSOs directly interconnected to a Telephone Company access tandem.

When the Tandem-Switched Transport is provided by more than one telephone company, the Shared Trunk port charge shall be billed by the Telephone Company in whose territory the end office is located.

6.11.5 Multiplexing

Multiplexing provides for arrangements to convert a single higher capacity or bandwidth circuit for bulk transport to several lower capacity or bandwidth circuits. Monthly rates and nonrecurring charges for multiplexing apply as follows: 1) the DS3/DS1 Multiplexing Charge applies to all DS3 to DS1 multiplexing arrangements; 2) the DS1/Voice Multiplexing Charge applies to all DS1 Entrance Facility and Direct-Trunked Transport circuits that terminate in an analog office and where the multiplexer performs DS1/Voice multiplexing functions; 3) a Multiplexing Charge will always apply when FGA is provisioned on a Switched DS1 and on High Capacity shared use switched and special access facilities.

6. Switched Access Service (Cont'd)

6.11 Applications

6.11.5 Multiplexing (Cont'd)

Listed below are the multiplexing arrangements offered with switched access.

- DS1 to Voice

  An arrangement that multiplexes twenty-four voice grade circuits to a single DS1 digital circuit at a rate of 1.544 Mbps, or multiplexes a single DS1 digital circuit at a rate of 1.544 Mbps to twenty-four voice grade circuits.

- DS3 to DS1

  An arrangement that multiplexes twenty-eight DS1 digital circuits to a single DS3 digital circuit at rate of 44.736 Mbps, or multiplexes a single DS3 digital circuit at a rate of 44.736 Mbps to twenty-eight DS1 digital circuits.

7. Special Access Service

7.1 General

Special Access Service provides a transmission path to connect customer designated premises*, directly, or through a Telephone Company hub or hubs where bridging or multiplexing functions are performed, or to connect a customer designated premises and a WATS Serving Office, or to connect a customer designated premises to an ADSL Access Service Connection Point, or to connect a customer designated premises to a Public Packet Data Network Service. Special Access Service includes all exchange access not utilizing Telephone Company end office switches.

The connections provided by Special Access Service can be either analog or digital. Analog connections are differentiated by spectrum and bandwidth. Digital connections are differentiated by bit rate.

Special Access Service purchased from the provisions of this tariff may be commingled with unbundled network elements, where available, or unbundled network element combinations, where available, purchased pursuant to the Commission's Part 51 Interconnection Rules and in compliance with the Federal Communications Commission's Report and Order and Order on Remand and Further Notice of Proposed Rulemaking in CC Docket Nos. 01-338, 96-98 and 98-147, adopted February 20, 2003 and released August 21, 2003 (FCC 03-36). Unbundled elements and commingling are not available in designated rural CenturyLink Operating companies where a 251 (f) exemption is in effect.

7.1.1 Channel Types

There are eight types of channels used to provide Special Access Services. Each type has its own characteristics. All are subdivided by one or more of the following:

- Transmission specifications,
- Bandwidth,
- Speed (i.e., bit rate),
- Spectrum

Customers can order a basic channel and select from a list of those available transmission parameters and channel interfaces that they desire in order to meet specific communications requirements.

For purposes of ordering channels, each has been identified as a type of Special Access Service. However, such identification is not intended to limit a customer's use of the channel nor to imply that the channel is limited to a particular use. For example, if a customer's equipment is capable of transmitting voice over a channel that is identified as a Metallic Service in this tariff, there is no restriction against doing so.

* Telephone Company Centrex CO and CO-like switches and packet switches included in Public Packet Switching Network (PPSN) Service are considered to be a customer designated premises for purposes of this tariff.

7. Special Access Service (Cont'd)

7.1 General (Cont'd)

7.1.1 Channel Types (Cont'd)

Following is a brief description of each type of channel:

Metallic - a channel for the transmission of low speed varying signals at rates up to 30 baud.

Telegraph Grade - a channel for the transmission of binary signals at rates of 0 to 75 baud or 0 to 150 baud.

Voice Grade - a channel for the transmission of analog signals within an approximate bandwidth of 300 to 3000 Hz.

Program Audio - a channel for the transmission of audio signals. The nominal frequency bandwidths are from 200 to 3500 Hz, from 100 to 5000 Hz, from 50 to 8000 Hz, or from 50 to 15000 Hz.

Digital Data - a channel for the digital transmission of synchronous serial data at rates of 2.4, 4.8, 9.6, 19.2, 56.0 or 64.0 Kbps.

High Capacity - a channel for the transmission of isochronous serial digital data at rates of 1.544, or 44.736 Mbps.

Synchronous Optical - a high speed channel for the transmission of synchronous full duplex data over optical fiber at rates of 155.52 Mbps, 622.08 Mbps or 2.4 Gbps.

Ethernet Transport – A high speed data transport service that provides point-to-point transmission of customer's data communications in a fast packet based Ethernet protocol at transport speeds of 10 Mbps, 20 Mbps, 50 Mbps, 100 Mbps, 150 Mbps, 300 Mbps, 450 Mbps, 600 Mbps and 1 Gbps.

7. Special Access Service (Cont'd)

7.1 General (Cont'd)

7.1.1 Channel Types (Cont'd)

Detailed descriptions of each of the channel types are provided in 7.4 through 7.10 following.

The customer also has the option of ordering Voice Grade and High Capacity facilities (i.e., 1.544 Mbps, and 44.736 Mbps) to Telephone Company hubs for multiplexing to individual channels of a lower capacity or bandwidth. Descriptions of the types of multiplexing available at the hubs, as well as the number of individual channels which may be derived from each type of facility, are set forth in 7.6 and 7.10 following. Additionally, the customer may specify optional features for the individual channels derived from the facility to further tailor the channel to meet specific communications requirements. Descriptions of the optional features and functions available are set forth in 7.2.1 following.

For example, a customer may order a 44.736 Mbps High Capacity channel from a customer designated premises to a Telephone Company hub for multiplexing to two 1.544 Mbps channels. The 1.544 Mbps channels may be further multiplexed at the same or a different hub to Voice Grade channels or may be extended to other customer designated premises or hubs. Optional features may be added to either the 1.544 Mbps or the Voice Grade channels.

Synchronous Optical Channel Service provides the customer with the option of ordering Add/Drop Multiplexing at a suitably equipped wire center. This allows lower level signals to be added or dropped from a high speed optical carrier channel for delivery to a customer premises. A description of Add/Drop Multiplexing is set forth in 7.10.3 (C) following.

7. Special Access Service (Cont'd)

7.1 General (Cont'd)

7.1.2 Service Descriptions

For the purposes of ordering, there are eight categories of Special Access Service. These are:

	Service Designator Codes
Metallic	MT
Telegraph Grade	TG
Voice	VG
Program Audio	AP
Digital Data	DA
High Capacity	DS
Synchronous Optical	OC
Ethernet Transport	ET

Each service consists of a basic channel to which a technical specifications package (customized or predefined), channel interface(s) and, when desired, optional features and functions are added to construct the service desired by the customer. Technical specifications packages are described in Section 15 following, optional features and functions are described in this section. Channel interfaces are described in 15.2 following.

Customized technical specifications packages will be provided where technically feasible. If the Telephone Company determines that the requested parameter specifications are not compatible, the customer will be advised and given the opportunity to change the order.

When a customized channel is ordered the customer will be notified whether Additional Engineering Charges apply. In such cases, the customer will be advised and given the opportunity to change the order.

The channel descriptions provided in 7.4 through 7.11 following, specify the characteristics of the basic channel and indicate whether the channel is provided between customer designated premises, between a customer designated premises and a Telephone Company hub where bridging or multiplexing functions are performed, between hubs, or between a customer designated premises and a WATS Serving Office, or between a customer designated premises and an ADSL Access Service Connection Point or between a customer designated premises and a wire center equipped with a Public Packet Data Network Service.

7. Special Access Service (Cont'd)

7.1 General (Cont'd)

7.1.2 Service Descriptions (Cont'd)

(A) Information pertaining to the technical specifications packages indicates the transmission parameters that are available with each package. This information is displayed in matrices set forth in 15.2 following.

(B) Channel interfaces at each Point of Termination on a two-point service may be symmetrical or asymmetrical. On a multi point service they may also be symmetrical or asymmetrical, but communications can only be provided between compatible channel interfaces. Only certain channel interfaces are compatible. These are set forth in 15.2 following, in a combination format.

(C) Only certain channel interface combinations are available with the predefined technical specifications packages. These are delineated in the Technical References set forth in (F) following. When a customized channel is requested, all channel interface combinations available with the specified type of service are available with the customized channel.

(D) The optional features and functions available with each type of Special Access Service are described in this section. The optional features and functions information also indicates with which technical specifications packages they are available. Such information is displayed in matrices set forth in 15.2 following with the optional feature or function listed down the left side and the technical specifications package listed across the top.

7. Special Access Service (Cont'd)

7.1 General (Cont'd)

7.1.2 Service Descriptions (Cont'd)

E) The Telephone Company will maintain services installed prior to April 1, 1985, at their existing transmission specifications, provided such performance specifications do not exceed the standards listed in this provision. Those services exceeding the standards listed will be maintained at the performance levels specified in this tariff.

(F) All services installed after April 1, 1985 will conform to the transmission specifications standards contained in this tariff or in the following Technical References for each category of service:

Metallic	TR-NPL-000336
Telegraph Grade	TR-NPL-000336
Voice Grade	TR-TSY-000335; PUB 41004, Table 4
Program Audio	TR-NPL-000337 and associated Addendum
Digital Data	TR-NWT-000341
For 2.4, 4.8, 9.6 & 56.0 Kbps	BellCore Pub 62310,(MDP-326-726)
For 19.2 Kbps	INC Bulletin CB-INC-100
For 64.0 Kbps	AT&T PUB 62310
High Capacity	TR-INS-000342; TR-NPL-000054; PUB 62411
Synchronous Optical	GR-253-CORE
For OC3, OC12, OC48	GR-1374-CORE ANSI T1.105 ANSI T1.102
Ethernet Transport	ANSI / IEEE X3.802.3 ANSI / IEEE X3.802.3u ANSI / IEEE X3.802.3z

7.1.3 Service Configurations

There are three types of service configurations over which Special Access Services are provided: Two-Point Service, Multipoint Service and Synchronous Optical Channel Service.

(A) Two-Point Service

A two-point service connects two customer designated premises, either on a directly connected basis or through a hub where multiplexing functions are performed, or a customer designated premises and an ADSL Access Service Connection Point, or a customer designated premises and a wire center equipped with a Public Packet Data Network Service, or a customer designated premises and a Wats Serving Office (WSO) and a WATS Serving Office (WSO).

7. Special Access Service (Cont'd)

7.1 General (Cont'd)

7.1.3 Service Configurations (Cont'd)

(A) Two-Point Service (Cont'd)

Applicable rate elements are:

- Channel Terminations
- Channel Mileage (as applicable)
- Optional Features and Functions (when applicable)

A Special Access Surcharge, as set forth in 7.3 following, may be applicable.

The following diagram depicts a two-point Voice Grade service connecting two Customer Designated Premises (CDP). The service is provided with C-Type conditioning.

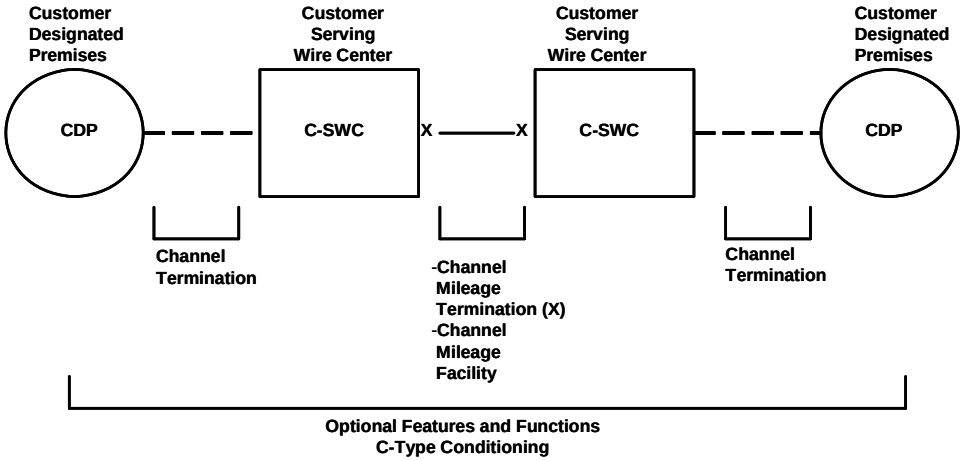

Applicable rate elements are:

- Channel Terminations (applicable one (1) per CDP and Mileage Charge, if applicable)
- Channel Mileage
  - 2 Channel Mileage Terminations plus
  - 1 section, Channel Mileage Facility per mile
- C-Type Conditioning Optional Feature

7. Special Access Service (Cont'd)

7.1 General (Cont'd)

7.1.3 Service Configurations (Cont'd)

(A) Two-Point Service (Cont'd)

The following diagram depicts a two-point Voice Grade service connecting a customer designated premises to a WATS serving office.

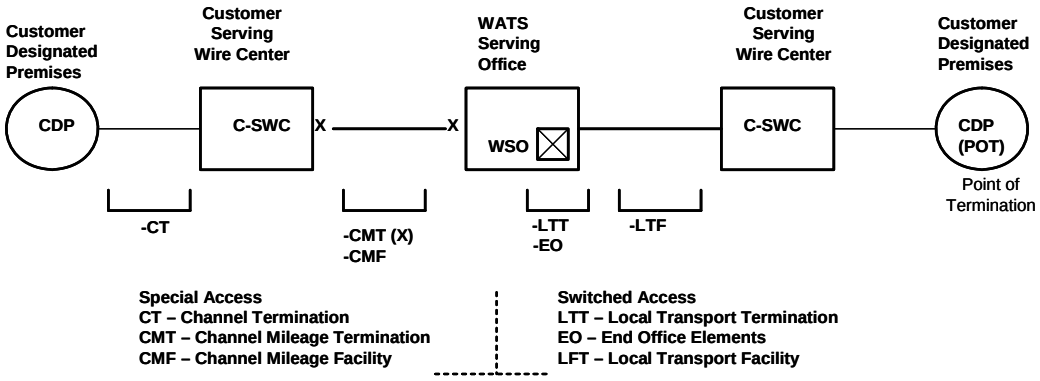

Applicable rate elements for Special Access are:

- Channel Termination (and Mileage charge, if applicable)
- Channel Mileage
  2 Channel Mileage Terminations plus 1 section, Channel Mileage Facility per mile
- Special Access Surcharge*

* May not apply if exemption certification is provided.

7. Special Access Service (Cont'd)

7.1 General (Cont'd)

7.1.3 Service Configurations (Cont'd)

(B) Multipoint Service

Multipoint service connects three or more customer designated premises through one or more Telephone Company hubs. Only certain types of Special Access Service are provided as multipoint service. These are so designated in the descriptions for the appropriate channel.

The channel between hubs (i.e., bridging locations) on a multipoint service is a mid-link. There is no limitation on the number of mid-links available with a multipoint service. However, when more than three mid-links in tandem are provided the quality of the overall service may be degraded.

Multipoint service utilizing a customized technical specifications package, as set forth in 7.1.2 preceding and 15.2 following, will be provided when technically possible. If the Telephone Company determines that the requested characteristics for a multipoint service are not compatible, the customer will be advised and given the opportunity to change the order.

When ordering, the customer will specify the desired bridging hub(s). National Exchange Carrier Association, Inc. Tariff F.C.C. No. 4 identifies serving wire centers, hub locations and the type of bridging functions available.

Applicable Rate Elements are:

- Channel Terminations (one per customer designated premises)
- Channel Mileage (as applicable between the serving wire center for each customer designated premises and the hub and between hubs).
- Bridging
- Additional Optional Features and Functions (when applicable).

7. Special Access Service (Cont'd)

7.1 General (Cont'd)

7.1.3 Service Configurations (Cont'd)

(B) Multipoint Service (Cont'd)

The Special Access Surcharge, as set forth in 7.3 following, may be applicable.

Example: Voice Grade multipoint service connecting four customer designated premises (CDP) via two customer specified bridging hubs.

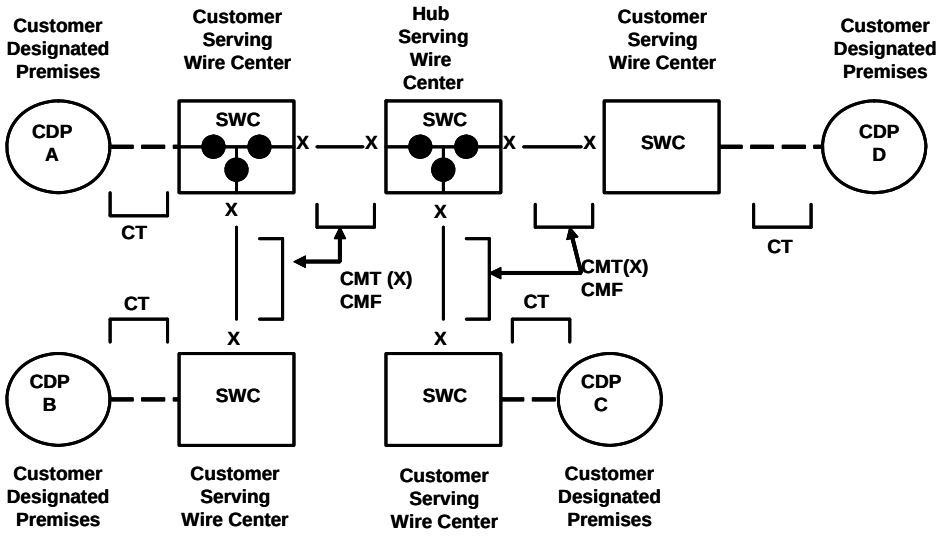

CT - Channel Termination (and Mileage charge, if applicable)
CMT - Channel Mileage Termination
CMF - Channel Mileage Facility
o - Bridging Port

Applicable rate elements are:

- Channel Terminations (4 applicable)
- Channel Mileage
  - o 2 Channel Mileage Terminations per Channel Mileage Facility section for a total of 8, plus o 4 sections, Channel Mileage Facility per mile
- Bridging Optional Feature (6 applicable, i.e., each bridge port)

7. Special Access Service (Cont'd)

7.1 General (Cont'd)

7.1.3 Service Configurations (Cont'd)

(C) Synchronous Optical Channel Service

A Synchronous Optical Channel Service connects two customer designated premises or a customer designated premises and a DSL Access Service Connection Point, or a wire center equipped with Add/Drop Multiplexing, or a customer designated premises and a wire center equipped with an Asynchronous Transfer Mode Cell Relay Access Service. The Connection is provided via a high speed optical carrier communication path delivering an optical handoff.

Applicable rate elements are:
- Channel Terminations
- Channel Mileage (where applicable)
- Optional Features and Functions

(1) The following diagram depicts a Synchronous Optical Channel Service connecting two customer designated premises (CPD). The optional Feature and Function of a Customer Node was ordered at one CPD.

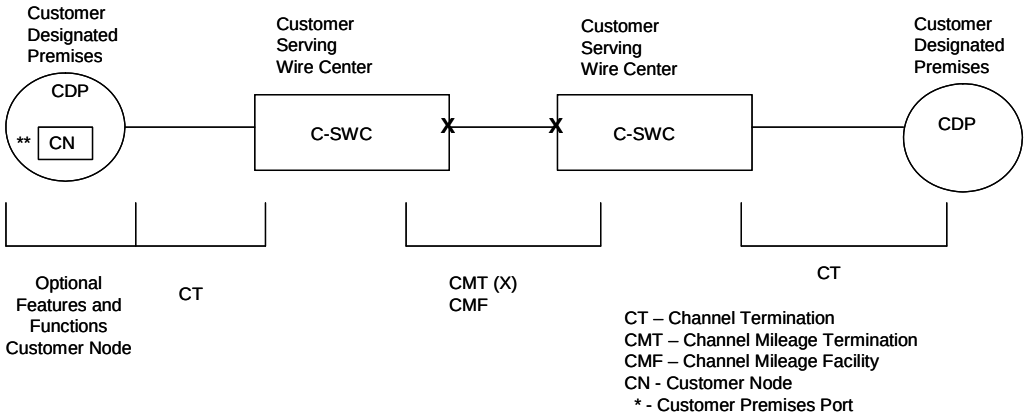

7. Special Access Service (Cont'd)

7.1 General (Cont'd)

7.1.3 Service Configurations (Cont'd))

(C) Synchronous Optical Channel Service (Cont'd)

(1) (Cont'd)

Applicable rate elements are:
- Channel Terminations (applicable one (1) per CDP)
- Channel Mileage
- 2 Channel Mileage Terminations plus
- 1 Section, Channel Mileage Facility per mile
- Customer Node Optional Feature
- (1 customer Node applicable and three Customer Premises Ports applicable, i.e., each port)

7. Special Access Service (Cont'd)

7.1 General (Cont'd)

7.1.3 Service Configurations (Cont'd)

(C) Synchronous Optical Channel Service (Cont'd)

(2) The following diagram depicts a Synchronous Optical Channel Service connecting three Customer Designated Premises. CDP-A and CDP-B are connected using an Add/Drop Multiplexer. At the Add/Drop Multiplexer, the customer may drop off lower speed special access services. Rates and charges are set forth in 17.5.8 and 17.6.9 following.

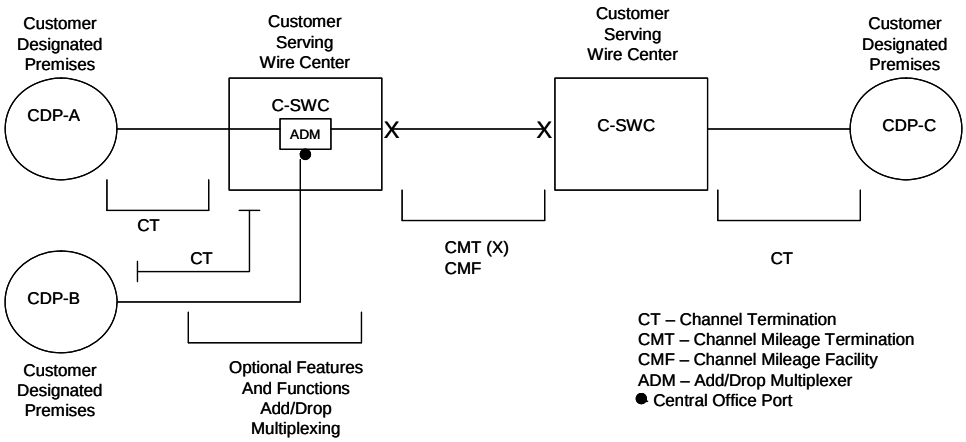

7. Special Access Service (Cont'd)

7.1 General (Cont'd)

7.1.3 Service Configurations (Cont'd)

(C) Synchronous Optical Channel Service (Cont'd)

(2) (Cont'd)

Applicable rate elements are:
- Channel Terminations (applicable one (1) per CPD)
- Channel Termination Mileage Charge if applicable
- Channel Mileage
- Channel Mileage Termination (2 applicable)
- 1 Section, Channel Mileage Facility per mile
- Add/Drop Multiplexing Optional Feature

(1 Central Office Port applicable, i.e., each port)

7. Special Access Service (Cont'd)

7.1 General (Cont'd)

7.1.4 Alternate Use

the customer can select different types of transmission at different times. A customer may use a service in any privately beneficial manner. However, where technical or engineering changes are required to effectuate an alternate use, the Telephone Company will make such special arrangements available on an individual case basis.

The arrangement required to transfer the service from one operation to the other (i.e., the transfer relay and control leads) will be rated and provided on an individual case basis and filed in Section 12. following, Specialized Service or Arrangements. The customer will pay the stated tariff rates for the Access Service rate elements for the service ordered [i.e., Channel Terminations, Channel Mileage (as applicable) and Optional Features and Functions (if any)].

7.1.5 Special Facilities Routing

A customer may request that the facilities used to provide Special Access Service be specially routed. The regulations, rates and charges for Special Facilities Routing (i.e., Avoidance, Diversity and Cable-Only) are set forth in Section 11. following.

7.1.6 Design Layout Report

At the request of the customer, the Telephone Company will provide to the customer the make-up of the facilities and services provided under this tariff as Special Access Service to aid the customer in designing its overall service. This information will be provided in the form of a Design Layout Report. The Design Layout Report will be provided to the customer at no charge, and will be reissued or updated whenever these facilities are materially changed.

7. Special Access Service (Cont'd)

7.1 General (Cont'd)

7.1.7 Acceptance Testing

At no additional charge, the Telephone Company will, at the customer's request, cooperatively test the following at the time of installation:

(A) For Voice Grade analog services, the acceptance test will include tests for loss, 3-tone slope, DC continuity, operational signaling, C-notched noise, and C-message noise when these parameters are applicable and specified in the order of service. Additionally, for Voice Grade services, a balance (improved loss) test will be made if the customer has ordered the improved loss optional feature.

(B) For other analog services (i.e., Metallic, Telegraph, and Program Audio) and for digital services (i.e., Digital Data and High Capacity), acceptance tests will include tests applicable to the service as specified by the customer in the order for service.

In addition to the above tests, Additional Cooperative Acceptance Testing for Voice Grade service to test other parameters, as described in 13.3.1(B) following, is available at the customer's request. All test results will be made available to the customer upon request.

7.1.8 Ordering Options and Conditions

Special Access Service is ordered under the Access Order provisions set forth in Section 5. preceding. Also included in that section are other charges which may be associated with ordering Special Access Service (e.g., Service Date Change Charges, Cancellation Charges, etc.).

.

7. Special Access Service (Cont'd)

7.2 Rate Regulations

This section contains the specific regulations governing the rates and charges that apply for Special Access.

7.2.1 Rate Categories

There are three basic rate categories which apply to Special Access Service:
- Channel Terminations (described in 7.2.1(A) following)
- Channel Mileage (described in 7.2.1(B) following)
- Optional Features and Functions (described in 7.2.1(C) following).

(A) Channel Terminations

The Channel Termination rate category recovers the costs associated with the communications path between a customer designated premises and the serving wire center of that premises. Included as part of the Channel Termination is a standard channel interface arrangement which defines the technical characteristics associated with the type of facilities to which the access service is to be connected at the Point of Termination (POT) and the type of signaling capability, if any. The signaling capability is provided as an optional feature as set forth in (C) following.

For Synchronous Optical Channel Service the high speed optical communication path is between the Optical Line Termination (OLT) at the customer designated premises and the serving wire center of that premises.

One Channel Termination charge applies per customer designated premises at which the channel is terminated. This charge will apply even if the customer designated premises and the serving wire center are collocated in a Telephone Company building. For a Special Access Digital Data Service 56.0 or 64.0 Kbps Bit Rate or High Capacity Service Connecting a customer designated premises to a Frame Relay Access Service as described in Section 16.1, following, there will be a charge for only one Channel Termination. For a High Capacity Service or for a Synchronous Optical Channel Service Connecting a customer designated premises to an Asynchronous Transfer Mode Cell Relay Access Service as described in Section 16.2, following, there will be a charge for only one channel termination.

For a Metallic Service connecting to a DSL Access Service Connection Point as described in Section 8, following, there will be a charge for two Channel Terminations for each DSL Access Service Connection function ordered.

For DS1, DS3 and SONET Service, a Channel Termination Mileage charge applies for channel terminations over three (3) miles.

7. Special Access Service (Cont'd)

7.2 Rate Regulations (Cont'd)

7.2.1 Rate Categories (Cont'd)

(A) Channel Terminations (Cont'd)

For DS3 High Capacity Service, the Channel Termination rates are made up of the DS3 Capacity interface rate and the DS3 Channel Installed rate. The Capacity Interface rate is dependent upon the capacity ordered (i.e., Capacity Interface of 1, 3, 6 or 12) and is applicable at each customer designated premises. The capacity ordered is the maximum number of DS3 services that can be terminated on a given service at the customer designated premises (e.g., a capacity of 3 can terminate 1, 2, or 3 DS3 services). One DS3 Channel Installed rate applies per customer designated premises at which the channel is terminated for each DS3 channel that is ordered. These charges will apply even if the customer designated premises and the serving wire center are collocated in a Telephone Company building.

For a 1.544 Mbps or 44.736 Mbps High Capacity Service or for an OC3/OC3c Synchronous Optical Channel Service connecting a customer designated premises to an ADSL Access Service Connection Point, there will be a charge for only one Channel Termination.

7. Special Access Service (Cont'd)

7.2 Rate Regulations (Cont'd)

7.2.1 Rate Categories (Cont'd)

(B) Channel Mileage

The Channel Mileage rate category recovers the costs associated with the end office equipment and the transmission facilities between the serving wire centers associated with two customer designated premises, between a serving wire center associated with a customer designated premises and a Telephone Company hub, between two Telephone Company hubs, between a serving wire center associated with a customer designated premises and a wire center equipped for Add/Drop Multiplexing (ADM) or between two ADM equipped wire centers. Channel Mileage rates are made up of the Channel Mileage Facility rate and the Channel Mileage Termination rate.

(1) Channel Mileage Facility

The Channel Mileage Facility rate recovers the per mile cost for the transmission path which extends between the Telephone Company serving wire centers and/or hub(s) or between the Telephone Company serving wire center and another wire center equipped with a Public Packet Data Network Service.

The Synchronous Optical Channel Service Channel Mileage Facility provides high speed transmission facilities between the Telephone Company serving wire centers or between a Telephone Company serving wire center and another serving wire center equipped for Add/Drop Multiplexing (ADM) or between two ADM equipped wire centers, or between the Telephone Company serving wire center and another wire center equipped with Asynchronous Transfer Mode Cell Relay Access Service.

(2) Channel Mileage Termination

The Channel Mileage Termination rate recovers the cost for end office equipment associated with terminating the facility (i.e., basic circuit equipment and terminations at serving wire centers and hubs). The Channel Mileage Termination rate will apply at the serving wire center(s) for each customer designated premises and Telephone Company hub where the channel is terminated. If the Channel Mileage is between Telephone Company bridging hubs, the Channel Mileage Termination rate will apply per Telephone

7. Special Access Service (Cont'd)

7.2 Rate Regulations (Cont'd)

7.2.1 Rate Categories (Cont'd)

(B) Channel Mileage (Cont'd)

(2) Channel Mileage Termination (Cont'd)

Company designated hub. If the Channel Mileage is between the serving wire center for a customer designated premises and a WATS Serving Office, the Channel Mileage Termination rate will apply at both the serving wire center associated with the customer designated premises and the WATS Serving Office. If the Channel Mileage is between the serving wire center for a customer designated premises and another wire center equipped for Frame Relay Access Service, the Channel Mileage Termination Rate will apply only at the serving wire center for the customer designated premises.

If the Channel Mileage is between a Telephone Company serving wire center equipped with Asynchronous Transfer Mode Cell Relay Access Service (ATM-CRS) and another telephone company ATM-equipped serving wire center, no Channel Mileage Termination Rate will apply.

If the Channel Mileage for Synchronous Optical Channel Service is between the serving wire center for a customer designated premises and a wire center equipped for Add/Drop Multiplexing, the Channel Mileage Termination Rate will apply at both the serving wire center associated with the Customer Designated Premises and the wire center equipped with Add/Drop Multiplexing. If the Channel Mileage is between two wire centers equipped for Add/Drop Multiplexing, the channel Mileage Termination rate will apply at both wire centers equipped with Add/Drop Multiplexing.

When the Channel Mileage Facility is zero (i.e., collocated serving wire centers), neither the Channel Mileage Facility rate nor the Channel Mileage Termination rate will apply.

7. Special Access Service (Cont'd)

7.2 Rate Regulations (Cont'd)

7.2.1 Rate Categories (Cont'd)

(C) Optional Features and Functions

The Optional Features and Functions rate category recovers the costs associated with optional features and functions which may be added to a Special Access Service to improve its quality or utility to meet specific communications requirements. These are not necessarily identifiable with specific equipment, but rather represent the end result in terms of performance characteristics which may be obtained. These characteristics may be obtained by using various combinations of equipment. Although the equipment necessary to perform a specified function may be installed at various locations along the path of the service, they will be charged for as a single rate element.

Examples of Optional Features and Functions that are available include, but are not limited to, the following:

- Signaling Capability
- Hubbing Functions
- Conditioning
- Transfer Arrangements

Descriptions for each of the available Optional Features and Functions are set forth in 7.4 through 7.10 following.

A hub is a Telephone Company designated serving wire center at which bridging or multiplexing functions are performed. The bridging functions performed are to connect three or more customer designated premises in a multi point arrangement. The multiplexing functions are to channelize analog or digital facilities to individual services requiring a lower capacity or bandwidth.

National Exchange Carrier Association, Inc. Tariff F.C.C. No. 4 identifies serving wire centers, hub locations, hub level (i.e., Hub, Terminus Hub, Intermediate Hub, or Super-Intermediate Hub) and the type of bridging or multiplexing functions available. Additionally, subtending wire centers are identified for Intermediate and Super-Intermediate Hubs.

7. Special Access Service (Cont'd)

7.2 Rate Regulations (Cont'd)

7.2.2 Types of Rates and Charges

There are three types of rates and charges. These are monthly rates, daily rates and nonrecurring charges. The rates and charges are described as follows:

(A) Monthly Rates

Monthly rates are recurring rates that apply each month or fraction thereof that a Special Access Service is provided. For billing purposes, each month is considered to have 30 days.

(B) Daily Rates

Daily rates are recurring rates that apply to each 24 hour period or fraction thereof that a Program Audio Special Access Service is provided for part-time use. For purposes of applying daily rates, the 24 hour period is not limited to a calendar day.

Part-time Program Audio Service provided within a consecutive 30 day period will be charged the daily rate, not to exceed the monthly rate. For each day or partial day after a consecutive 30 day period of service, a charge equal to 1/30th of the monthly rate shall apply.

7. Special Access Service (Cont'd)

7.2 Rate Regulations (Cont'd)

7.2.2 Types of Rates and Charges (Cont'd)

(C) Nonrecurring Charges

Nonrecurring charges are one-time charges that apply for specific work activity (i.e., installation or change to an existing service). The types of nonrecurring charges that apply for Special Access Service are: installation of service, installation of optional features and functions, and service rearrangements. These charges are in addition to the Access Order Charge as specified in Section 17 following.

(1) Installation of Service

Nonrecurring charges apply to each service installed. The nonrecurring charges for the installation of service are set for each channel type as a nonrecurring charge for the Channel Termination.

(2) Installation of Optional Features and Functions

When optional features and functions are installed coincident with the initial installation of service, no separate nonrecurring charge is applicable. When optional features and functions are installed or changed subsequent to the installation of service, an Access Order Charge as specified in Section 17 following will apply per order.

7. Special Access Service (Cont'd)

7.2 Rate Regulations (Cont'd)

7.2.2 Types of Rates and Charges (Cont'd)

(C) Nonrecurring Charges (Cont'd)

(3) Service Rearrangements

Service rearrangements are changes to existing (installed) services which may be administrative only in nature, as set forth following, or that involve actual physical change to the service. Changes to pending orders are set forth in 5.4 preceding.

Changes in the physical location of the point of termination or customer designated premises are moves as set forth in 7.2.3 following.

Changes in the type of Service or Channel Termination which result in a change of the minimum period requirement will be treated as a discontinuance of the service and an installation of a new service.

Changes in ownership or transfer of responsibility from one customer to another will be treated as a discontinuance of the service and an installation of a new service. In the event the change in ownership or transfer of responsibility is as set forth in 2.1.2(A) preceding where there is no change in facilities or arrangements, the change will be treated as an administrative change.

7. Special Access Service (Cont'd)

7.2 Rate Regulations (Cont'd)

7.2.2 Types of Rates and Charges (Cont'd)

(C) Nonrecurring Charges (Cont'd)

(3) Service Rearrangements (Cont'd)

Administrative changes will be made without charge(s) to the customer. Administrative changes are as follows:

- Change of customer name,
- Change of customer or customer's end user premises address when the change of address is not a result of physical relocation of equipment,
- Change in billing data (name, address, or contact name or telephone number),
- Change of agency authorization,
- Change of customer circuit identification,
- Change of billing account number,
- Change of customer test line number,
- Change of customer or customer's end user contact name or telephone number, and
- Change of jurisdiction.

All other service rearrangements will be charged as follows:

- If the change involves the addition of other customer designated premises to an existing service, the nonrecurring charge for the channel termination rate element will apply. The charge(s) will apply only for the location(s) that is being added. The charge(s) will be in addition to an Access Order Charge as set forth in Section 17 following.

7. Special Access Service (Cont'd)

7.2 Rate Regulations (Cont'd)

7.2.2 Types of Rates and Charges (Cont'd)

(C) Nonrecurring Charges (Cont'd)

(3) Service Rearrangements (Cont'd)

- If the change involves the addition of an optional feature or function (with the exception of the addition of Clear Channel Capability to an existing service), or if the change involves changing the type of signaling on a Voice Grade service, and for all other changes the Access Order Charge as set forth in Section 17 following will apply.

- When the Clear Channel Capability optional feature is installed on an existing facility, the addition will be treated as a discontinuance and start of service and all associated non-recurring charges will apply.

7.2.3 Moves

A move involves a change in the physical location of one of the following:

- The Point of Termination at the customer's premises

- The customer's premises

The charges for the move are dependent on whether the move is to a new location within the same building or to a different building.

(A) Moves Within the Same Building

When the move is to a new location within the same building, the charge for the move will be an amount equal to one half of the nonrecurring (i.e., installation) charge for the service termination affected. There will be no change in the minimum period requirements. This charge is in addition to the Access Order Charge as specified in Section 17 following.

7. Special Access Service (Cont'd)

7.2 Rate Regulations (Cont'd)

7.2.3 Moves (Cont'd)

B) Moves To a Different Building

Moves to a different building will be treated as a discontinuance and start of service and all associated nonrecurring charges will apply. New minimum period requirements will be established for the new services. The customer will also remain responsible for satisfying all outstanding minimum period charges for the discontinued service.

7.2.4 Minimum Periods

The minimum service period for all services except part-time Program Audio services and DS3 High Capacity Service and Synchronous Optical Channel Service is one month and the full monthly rate will apply to the first month. Adjustments for the quantities of services established or discontinued in any billing period beyond the minimum period are as set forth in 2.4.1(F) preceding. The minimum service period for part-time Program Audio services is a continuous 24-hour period, not limited to a calendar day. The minimum service period for DS3 High Capacity Service and Synchronous Optical Channel Service is twelve months.

7. Special Access Service (Cont'd)

7.2 Rate Regulations (Cont'd)

7.2.5 Mileage Measurement

The mileage to be used to determine the monthly rate for the Channel Mileage Facility is calculated on the airline distance between the locations involved, i.e.,

- the serving wire centers associated with two customer designated premises,
- a serving wire center associated with a customer designated premises and a Telephone Company hub,
- a serving wire center associated with a customer designated premises and a wire center equipped with a Public Packet Data Network service,
- a serving wire center associated with a customer designated premises and an ADSL Access Service Connection Point,
- two Telephone Company hubs,
- a serving wire center associated with a customer designated premises and a wire center equipped for Add/Drop Multiplexing,
- two wire centers equipped for Add/Drop Multiplexing,
- or between the serving wire center associated with a customer designated premises and a WATS Serving Office.

The serving wire center associated with a customer designated premises is the serving wire center from which this customer designated premises would normally obtain dial tone.

Mileage charges are shown with each channel type. To determine the rate to be billed, first compute the mileage using the V&H coordinates method, as set forth in the National Exchange Carrier Association, Inc. Tariff F.C.C. No. 4, then multiply the resulting number of miles times the Channel Mileage Facility per mile rate, and add the Channel Mileage Termination rate for each termination. When the calculation results in a fraction of a mile, always round up to the next whole mile before determining the mileage and applying the rates. When more than one Telephone Company is involved in the provision of service, billing will be accomplished as set forth in 2.4.7 preceding.

7. Special Access Service (Cont'd)

7.2 Rate Regulations (Cont'd)

7.2.5 Mileage Measurement (Cont'd)

When hubs are involved, mileage is computed and rates applied separately for each section of the Channel Mileage, i.e.,

- customer designated premises serving wire center to hub,
- hub to hub and/or
- hub to customer designated premises serving wire center.

However, when any service is routed through a hub for purposes other than customer specified bridging or multiplexing (e.g., the Telephone Company chooses to so route for test access purposes), rates will be applied only to the distance calculated between the serving wire centers associated with the customer designated premises.

See the service configuration example for multipoint service as set forth in 7.1.3(B) preceding.

When Add/Drop Multiplexing is offered in connection with Synchronous Optical Channel Service, mileage is computed and rates applied separately for each section of the Channel Mileage, i.e.,

- customer designated premises serving wire center to an Add/Drop Multiplexing (ADM) equipped wire center,
- ADM equipped wire center to ADM equipped wire center,
- ADM equipped wire center to a customer designated premises serving wire center.

7.2.6 Facility Hubs

A customer has the option of ordering Voice Grade service or High Capacity services (i.e., DS1, or DS3) to a facility hub for channelizing to individual services requiring lower capacity facilities (e.g., Telegraph, Voice, Program Audio, etc.).

7. Special Access Service (Cont'd)

7.2 Rate Regulations (Cont'd)

7.2.6 Facility Hubs (Cont'd)

Different locations may be designated as hubs for different facility capacities, e.g., multiplexing from digital to digital may occur at one location while multiplexing from digital to analog may occur at a different location. When placing an Access Order the customer will specify the desired hub.

National Exchange Carrier Association, Inc. Tariff F.C.C. No. 4 identifies serving wire centers, hub locations, hub level (i.e., Hub, Terminus Hub, Intermediate Hub, or Super-Intermediate Hub) and the type of multiplexing functions available. Additionally, subtending wire centers are identified for Intermediate and Super-Intermediate Hubs.

Some of the types of multiplexing available include the following:

- from higher to lower bit rate
- from higher to lower bandwidth
- from high capacity to voice frequency channels.

Point to point services may be provided on channels of these services to a hub. The transmission performance for the point to point service provided between customer designated premises will be that of the lower capacity or bit rate. For example, when a 1.544 Mbps channel is multiplexed to voice frequency channels, the transmission performance of the channelized services will be Voice Grade, not High Capacity.

The Telephone Company will commence billing the monthly rate for the service to the hub on the date specified by the customer on the Access Order. Individual channels utilizing these services may be installed coincident with the installation of the service to the hub or may be ordered and/or installed at a later date, at the option of the customer. The customer will be billed for a Voice Grade or a High Capacity Channel Termination, Channel Mileage (when applicable), and the multiplexer at the time the service is installed. Individual service rates (by service type) will apply for a Channel Termination and additional Channel Mileage (as required) for each channelized service. These will be billed to the customer as each individual service is installed.

7. Special Access Service (Cont'd)

7.2 Rate Regulations (Cont'd)

7.2.6 Facility Hubs (Cont'd)

Cascading multiplexing occurs when a High Capacity service is de-multiplexed to provide channels with a lesser capacity and one of the lesser capacity channels is further de-multiplexed. For example, a 44.736 Mbps High Capacity service is de-multiplexed to 28 DS1 channels and then one of the DS1 channels is further de-multiplexed to 24 individual Voice Grade channels.

When cascading multiplexing is performed, whether in the same or a different hub, a charge for the additional multiplexing unit also applies. When cascading multiplexing is performed at different hubbing locations, Channel Mileage charges also apply between the hubs.

The Telephone Company will designate hubs for Program Audio Services. Full-time or part-time service may be provided between customer designated premises or between a customer designated premises and a hub and billed accordingly at the monthly rates set forth in Section 17 following for a Channel Termination, Channel Mileage and Optional Features and Functions, as applicable. When the service is ordered to a hub, the customer may order full-time or part-time Program Audio services as needed between that hub and additional customer designated premises. The rate elements required to provide the part-time service (i.e., Channel Termination, Channel Mileage and Optional Features and Functions, as applicable) will be billed at daily rates for the duration of the service requested.

7. Special Access Service (Cont'd)

7.2 Rate Regulations (Cont'd)

7.2.7 Mixed Use Analog and Digital High Capacity Services

Mixed use refers to a rate application applicable only when the customer orders High Capacity Special Access facilities between a customer designated premises and a Telephone Company hub where the Telephone Company performs multiplexing/de-multiplexing functions and the same customer then orders the derived channels as Special and Switched Access Services. If the customer has Switched Access Service between a customer designated premises and an end office that is multiplexed at a Telephone Company hub and subsequently orders the derived channels as Special and Switched Access Service, rates and charges will apply as if the service were ordered as mixed use.

Except as noted above, the High Capacity facility will be ordered, provided and rated as Special Access Service (i.e., Channel Termination, Channel Mileage, as appropriate, and Multiplexing Arrangement). The nonrecurring charge that applies when the mixed use facility is installed will be the nonrecurring charge associated with the appropriate Special Access High Capacity Channel Termination. Rating as Special Access will continue until such time as the customer chooses to use a portion of the available capacity for Switched Access Service. Individual service (i.e., Switched or Special Access) nonrecurring charges will not apply to the individual channels of the mixed use facility.

When Special Access Service is provided utilizing a channel of the mixed use facility to a hub, High Capacity rates and charges will apply for the facility to the hub, as set forth preceding, and individual service rates and charges will apply from the hub to the customer designated premises. The rates and charges that will apply to the portion from the hub to the customer designated premises will be dependent on the specific type of Special Access Service that is provided (e.g., Voice Grade, Telegraph, etc.). The applicable rates and charges will include a Channel Termination and Channel Mileage, if applicable. Rates and charges for optional features and functions associated with the service, if any, will apply for the appropriate channel type.

7. Special Access Service (Cont'd)

7.2 Rate Regulations (Cont'd)

7.2.7 Mixed Use Analog and Digital High Capacity Services (Cont'd)

As each individual channel is activated for Switched Access Service, the High Capacity Special Access Channel Termination, Channel Mileage, and Multiplexing rates will be reduced accordingly (e.g., 1/24th for a DS1 service, 1/672nd for a DS3 service, etc.).

Switched Access Service rates and charges, as set forth in Section 17 following, will apply for each channel that is used to provide a Switched Access Service. The Switched Access Service Entrance Facility charge, if applicable, will be reduced by multiplying its rate by the ratio of derived Switched Access Service channels to the total number of channels that can be derived. If the Telephone Company is providing Direct Trunked Transport, then the Direct Trunked Transport and Multiplexing Charges will be reduced by multiplying their respective rates by the ratio of derived Direct Trunked Transport channels to the total number of channels that can be derived.

The customer must place an order for each individual Switched or Special Access Service utilizing the Mixed Use Facilities and specify the channel assignment for each such service.

7. Special Access Service (Cont'd)

7.2 Rate Regulations (Cont'd)

7.2.8 Optional Rate Plans

(A) Synchronous Optical Channel Service Optional Rate Plan

The Synchronous Optical Channel Service Optional Rate Plan offers a Term Discount. The Term Discount applies to Channel Terminations, Channel Mileage, Customer Nodes, Customer Premises Ports, and Central Office Ports monthly rates, as set forth following. The rates and Term Discount percentages for the Synchronous Optical Channel Service Term Discount are set forth in 17.6.9 (A), (B), (C) and (D) following.

Discounts for the Synchronous Optical Channel Service Optional Rate Plan are only applied to Synchronous Optical Channel Service provided to a customer within the same state and LATA by the same Telephone Company.

OC3/OC3C, OC12 and OC48 Synchronous Optical Channel Service may be ordered at the customer's option on a monthly basis or for Term Discount periods of 36 months (3 years) or 60 months (5 years).

The minimum service period for all Term Discounts plans is twelve months. The customer must specify the length of the service commitment period at the time the service is ordered.

For customers that subscribe to the Term Discount Plan for 36 or 60 months, the Term Discount rates as set forth in 17.6.9 following will be frozen from Company initiated decreases, for the entire discount period at the percent in effect at the beginning of the Term Discount period.

If a Term Discount percentage increase occurs during the term of an existing Term Discount plan, the increase percentage will be applied automatically to the remainder of the current Term Discount period.

7. Special Access Service (Cont'd)

7.2 Rate Regulations (Cont'd)

7.2.8 Optional Rate Plans (Cont'd)

(A) Synchronous Optical Channel Service Optional Rate Plan (Cont'd)

At the end of the Term Discount period, the customer may convert to month-to-month service or subscribe to a new Term Discount plan. If the customer does not make a choice by the end of the discount period, the rates will automatically convert to month-to-month service rates. The minimum service period on a monthly basis is twelve months for Synchronous Optical Channel Service.

To be included in a Term Discount plan, all eligible Synchronous Optical Channel Service rate elements must be ordered for the same rate commitment term (i.e., all 36 months or 60 months) and with the same service date. When additional capacity is subsequently added, it will be available only on a month-to-month basis unless the discount period of the entire service is upgraded.

Eligible OC3/OC3C, OC12 or OC48 Synchronous Optical Channel Service rate elements are those Channel Terminations, Channel Mileage Facility, Channel Mileage Terminations, Customer Nodes, Customer Premises Port and Central Office Ports provided to a customer within the same state and LATA by the same Telephone Company. As long as the number of OC3/OC3C, OC12 or OC48 included in a Term Discount plan remains constant, customer requests to install and disconnect OC3/OC3C, OC12 or OC48 services, including changes affecting different wire centers and/or customer designated premises, will not change the current Term Discount period or the minimum service period, and Discontinuance of Service charges as set forth in (3) following will not apply.

7. Special Access Service (Cont'd)

7.2 Rate Regulations (Cont'd)

7.2.8 Optional Rate Plans (Cont'd)

(A) Synchronous Optical Channel Service Optional Rate Plan (Cont'd)

(1) Upgrades in Term Discounts

Services provided under monthly rates or Term Discount rates may be upgraded to a Term Discount plan at any time without incurring nonrecurring charges or discontinuance charges for existing services. The new Term Discount plan must meet or exceed the service term of the plan being upgraded. For example, a service with a 36 month commitment period may be upgraded to a new 36 month or 60 month service period. The monthly rates will be those that are in effect at the time the service is upgraded. A new minimum service period applies to all Synchronous Optical Channel Service that is upgraded.

(2) Upgrades in Capacity (OC3/OC3C to OC12 and/or OC48)

If the customer chooses to upgrade a service under the Term Discount rate plan to a higher capacity (i.e., OC3/OC3C to OC12 and/or OC48), discontinuance charges will not apply, provided all of the following conditions are met:

- the customer's order for the disconnect of the existing OC3/OC3C/OC12 Service and the installation of the new OC12/OC48 Service are received at the same time and specifically reference the application of upgrade in capacity,

- the customer's disconnect order for the existing OC3/OC3C/OC12 Service must reference the OC12/OC48 Service installation order,

- the new service has a total channel capacity greater than the total channel capacity of the service being discontinued and,

- the new Term Discount period meets or exceeds the Term Discount period being discontinued.

7. Special Access Service (Cont'd)

7.2 Rate Regulations (Cont'd)

7.2.8 Optional Rate Plans (Cont'd)

(A) Synchronous Optical Channel Service Optional Rate Plan (Cont'd)

(2) Upgrades in Capacity OC3/OC3C to OC12 and/or OC48 (Cont'd)

A new minimum service period applies to all upgrades. Nonrecurring charges will not be assessed when an existing OC3, OC12 and/or OC48 service is upgraded to an equivalent channel capacity at a higher speed.

Should the customer choose to upgrade either a portion of, or the entire OC3/OC3C and/or OC12 Service under the Term Discount plan to an OC12 and/or OC48 Service and move the service to a new customer location(s) within the same state and LATA, and when the service is provided by the same Telephone Company, discontinuance charges will not apply.

7. Special Access Service (Cont'd)

7.2 Rate Regulations (Cont'd)

7.2.8 Optional Rate Plans (Cont'd)

(A) Synchronous Optical Channel Service Optional Rate Plan (Cont'd)

(3) Discontinuance of Service

If the customer chooses to disconnect all or a portion of the service prior to the expiration of the Term Discount period, discontinuance charges will apply to the portion of the service being discontinued.

Should the customer choose to discontinue a Term Discount plan prior to the completion of the minimum service period, discontinuance charges will apply. Discontinuance charges equal to 100% of the total undiscounted monthly rates, less any amounts previously paid, will apply for the minimum service period. Additionally, discontinuance charges of 15% for the OC3/OC3C service and 50% for the OC12 or OC48 service, of the total undiscounted monthly charges will apply to the remaining portion of the discount service term.

Should the customer choose to discontinue service ordered under a Term Discount plan after the minimum service period but before the completion of the discount period, discontinuance charges will apply. Discontinuance charges of 15% for OC3/OC3C Service and 50% for OC12 or OC48 Service, of the total undiscounted monthly charges will apply to the remaining portion of the discount period. For example, a customer has an OC3/OC3C Service which it chooses to discontinue after 33 months into a 60 month service term. The discontinuance charge would be 0.15 times 27 months times the undiscounted monthly rates for that service.

7. Special Access Service (Cont'd)

7.2 Rate Regulations (Cont'd)

7.2.8 Optional Rate Plans (Cont'd)

(B) High Capacity Optional Rate Plan

The Term Discount plan applies to Special Access DS1 and DS3 High Capacity Service Channel Termination, Channel Mileage Facility and Channel Mileage Termination monthly rates, as set forth following. The current monthly rates for such services are reduced by a fixed percentage. The amount of the discount percentage differs based on the length of the service commitment period selected by the customer. The Term Discount percentages for High Capacity Service are as set forth in 17.5.8(C) following.

Discounts for the Term Discount plan are only applied to High Capacity Service provided to a customer within the same state and LATA by the same Telephone Company.

The minimum service period on a monthly rate basis is one month for DS1 service and twelve months for DS3 service.

(1) Term Discounts

DS1 and DS3 High Capacity Special Access Service may be ordered at the customer's option on a monthly rate basis or for Term Discount periods of 36 months (3 years) or 60 months (5 years).

The minimum service period for all Term Discount plans is twelve months. The customer must specify the length of the service commitment period at the time the service is ordered.

For customers that subscribe to the Term Discount plan for 36 or 60 months, the Term Discount percentage as set forth in 17.5.8(C) following will be frozen from Company initiated decreases, for the entire discount period at the percent in effect at the beginning of the Term Discount period.

If a Term Discount Percentage increase occurs during the term of an existing Term Discount plan, the increased percentage will be applied automatically to the remainder of the current Term Discount period.

At the end of the Term Discount period, the customer may convert to month-to-month service or subscribe to a new Term Discount plan. If the customer does not make a choice by the end of the discount period, the rates will automatically convert to month-to-month service rates.

7. Special Access Service (Cont'd)

7.2 Rate Regulations (Cont'd)

7.2.8 Optional Rate Plans (Cont'd)

(B) High Capacity Optional Rate Plan (Cont'd)

(1) Term Discounts (Cont'd)

To be included in a Service Term Discount plan, all eligible High Capacity rate elements must be ordered for the same commitment term (i.e., all 36 months or all 60 months) and with the same service date. When additional capacity is subsequently added, it will be available only on a month-to-month basis unless the discount period of the entire service is upgraded.

Eligible DS1 or DS3 High Capacity rate elements are those Channel Terminations, Channel Mileage Facility and Channel Mileage Terminations provided to a customer within the same state and LATA by the same Telephone Company. As long as the number of DS1s or DS3s included in a Term Discount plan remains constant, customer requests to install and disconnect DS1 or DS3 services, including changes affecting different wire centers and/or customer designated premises, will not change the current Term Discount period or the minimum service period, and Discontinuance of Service charges as set forth in (3) following will not apply.

7. Special Access Service (Cont'd)

7.2 Rate Regulations (Cont'd)

7.2.8 Optional Rate Plans (Cont'd)

(B) High Capacity Optional Rate Plan (Cont'd)

(1) Term Discounts (Cont'd)

(a) Upgrades in Term Discounts

Services provided under monthly rates or Term Discount rates may be upgraded to a Term Discount plan at any time without incurring Channel Termination nonrecurring charges or discontinuance charges for existing services. The new Term Discount plan must meet or exceed the service term of the plan being upgraded. For example, a service with a 36 month commitment period may be upgraded to a new 36 month, or 60 month service period. The monthly rates will be those that are in effect at the time the service is upgraded. A new minimum service period applies to all High Capacity Service that is upgraded.

(b) Upgrades in Capacity (DS1 to DS3)

If the customer chooses to upgrade a service under the Term Discount rate plan to a higher capacity (i.e., DS1 to DS3), discontinuance charges will not apply, provided all the following conditions are met:

- the customer's order for the disconnect of the existing DS1 Service and the installation of the new DS3 Service are received at the same time and specifically reference the application of upgrade in capacity,

- the customer's disconnect order for the existing DS1 Service must reference the DS3 Service installation order,

- the new service has a total voice equivalent channel capacity greater than the total voice equivalent channel capacity of the service being discontinued and,

- the new Term Discount Period meets or exceeds the Term Discount period being discontinued.

7. Special Access Service (Cont'd)

7.2 Rate Regulations (Cont'd)

7.2.8 Optional Rate Plans (Cont'd)

(B) High Capacity Optional Rate Plan (Cont'd)

(1) Term Discounts (Cont'd)

(b) Upgrades in Capacity (DS1 to DS3) (Cont'd)

A new minimum service period applies to all upgrades. Channel Termination nonrecurring charges for an equivalent channel capacity of the existing services being upgraded to the higher speed service will not be assessed. For example, 30 existing DS1 Services are being upgraded to DS3 Service at the customer's request. A total of 2 DS3 Services will be installed without Channel Termination nonrecurring charges being assessed, as it will require 2 DS3 Services to provide the equivalent channel capacity of the existing services. Channel Termination nonrecurring charges will not apply to the upgraded lower speed services placed on the higher speed service if requested at the same time as the upgrade request. Channel Termination nonrecurring charges will apply for capacity that exceeds the existing equivalent channel capacity.

Should the customer choose to upgrade either a portion of, or the entire DS1 Service under the Term Discount plan to a DS3 Service and move the service to a new customer location(s) within the same state and LATA, and when service is provided by the same telephone company, discontinuance charges will not apply.

7. Special Access Service (Cont'd)

7.2 Rate Regulations (Cont'd)

7.2.8 Optional Rate Plans (Cont'd)

(B) High Capacity Optional Rate Plan (Cont'd)

(1) Term Discounts (Cont'd)

(c) Discontinuance of Service

If the customer chooses to disconnect all or a portion of the service prior to the expiration of the Term Discount period, discontinuance charges will apply to the portion of the service being discontinued.

Should the customer choose to discontinue a Term Discount plan prior to the completion of the minimum service period, discontinuance charges will apply. Discontinuance charges equal to 100% of the total undiscounted monthly rates, less any amounts previously paid, will apply for the minimum service period. Additionally, discontinuance charges of 15% for DS1 service, and 50% for DS3 service, of the total undiscounted monthly charges will apply to the remaining portion of the discount service term.

Should the customer choose to discontinue service ordered under a Term Discount plan after the minimum service period but before the completion of the discount period, discontinuance charges will apply. Discontinuance charges of 15% for DS1 Service, and 50% for DS3 Service, of the total undiscounted monthly charges will apply to the remaining portion of the discount period. For example, a customer has a DS1 Service which it chooses to discontinue after 33 months into a 60-month service term. The discontinuance charge would be 0.15 times 27 months times the undiscounted monthly rates for that service.

7. Special Access Service (Cont'd)

7.2 Rate Regulations (Cont'd)

7.2.9 Ethernet Transport

The rates and charges for Ethernet Transport (ET) service are set forth in Section 17.5.9 following and are in addition to any applicable rates and charges set forth in any other sections of this service guide. Nonrecurring charges and monthly recurring rates applicable for ET service are billed in advance.

(A) Nonrecurring charges are one-time charges that apply for a specific work activity (i.e., installation of service) and are developed at full cost recovery on a labor hours per labor time basis. Nonrecurring charges will apply for Ethernet Transport regardless of the option selected (i.e., month-to-month, one, three or five year commitment). However, if at the end of the one, three or five year commitment period, the customer elects to renew their commitment plan or revert to the month-to-month rates, a nonrecurring charge will not apply for this renewal.

(B) Monthly recurring charges are flat recurring rates that apply each month or fraction thereof that a specific rate element is provided regardless of the amount of usage. For billing purposes, each month is considered to have 30 days.

7. Special Access Service (Cont'd)

7.2 Rate Regulations (Cont'd)

7.2.9 Ethernet Transport (Cont'd)

(C) Ethernet Transport service is available on a month-to-month basis or for a period of one, three or five years. All ET arrangements will begin in month one. If the customer requests that the service be disconnected prior to the expiration of the one, three or five year service period selected, termination liability charges equal to 50% of the remaining months of the term will apply. For example, a customer disconnecting in the 12th month of a 3 year plan will be charged 50% of the remaining 24 months of billing. The Federal Government and its authorized agents are exempt from the 50% termination liability penalty charge if service is discontinued prior to the expiration of the one, three or five year minimum commitment period.

Additionally, customers may disconnect ET service, without penalty, should the total monthly recurring rates associated with ET service increase by 10% or more at any one time. The customer must notify the Telephone Company in writing within 90 days after the effective date of the rate increase if they elect to discontinue service. Rate decreases will automatically be applied to the monthly recurring rates for the remainder of the service period.

7. Special Access Service (Cont'd)

7.2 Rate Regulations (Cont'd)

7.2.9 Ethernet Transport (Cont'd)

(C) (Cont'd)

If the customer does not specify renewal terms in writing 90 days prior to the expiration of the one, three or five year period, the commitment period and ET service rates in effect at the time of expiration will automatically renew. Alternatively, 90 days prior to the expiration of the one, three or five year period the customer may specify in writing their intent to continue use of the services under month-to-month rates. The customer can terminate ET service at the end of the minimum commitment period with no penalty or obligation to continue the service. Further, if the customer notifies the Telephone Company in writing 90 days prior to the expiration date of their minimum commitment period with their intent to not renew their ET service, the customer will have six (6) months after the expiration date to submit their disconnect order(s). If the customer fails to submit their disconnect order(s), by the end of the six (6) month period, the commitment period in effect at the time of the original expiration period will automatically renew at the current service guide rates. If the customer submits their disconnect orders(s) after the six (6) month period, termination liability charges will apply. Termination liability charges will be calculated at 50% of the monthly recurring charges for the remaining months of the commitment period up to a maximum of twelve (12) months. Time from the expiration of the original commitment period until the disconnect order(s) are received will apply for calculation of the termination liability charges.

7. Special Access Service (Cont'd)

7.2 Rate Regulations (Cont'd)

7.2.9 Ethernet Transport (Cont'd)

(C) (Cont'd)

Customers may upgrade Ethernet Transport without incurring termination liability charges under the following circumstances

(1) The order for the disconnect of the existing Ethernet Transport and the order for the upgraded Ethernet Transport must be received at the same time.

(2) The new Ethernet Transport is provided between the same customer and central office locations as the discontinued service.

(3) The service period of the new Ethernet Transport is equal to or greater than the service period of the existing Ethernet Transport service.

7. Special Access Service (Cont'd)

7.3 Surcharge for Special Access Service

7.3.1 General

Special Access Services provided under this tariff may be subject to the monthly Special Access Surcharge.

7.3.2 Application

(A) The Special Access Surcharge will apply to each interstate Special Access Service that terminates on an end user's PBX or other device, where through a function of the device, the Special Access Service interconnects to the local exchange network. Interconnection functions include, but are not limited to, wiring and software functions, bridging, switching or patching of calls or stations. The Surcharge will apply irrespective of whether the interconnection function is performed in equipment located at the customer's premises or in a Centrex CO-type switch.

(B) Special Access Service will be exempted from the Surcharge by the Telephone Company upon receipt of the customer's written certification for the following Special Access Service terminations:

(1) an open-end termination in a Telephone Company switch of an FX line, including CCSA and CCSA- equivalent ONALs; or

(2) an analog channel termination that is used for radio or television program transmission; or

(3) a termination used for TELEX service; or

(4) a termination that by the nature of its operating characteristics could not make use of Telephone Company common lines such as, terminations which are restricted through hardware or software; or

7. Special Access Service (Cont'd)

7.3 Surcharge for Special Access Service (Cont'd)

7.3.2 Application (Cont'd)

(B) (Cont'd)

(5) a termination that interconnects either directly or indirectly to the local exchange network where the usage is subject to Carrier Common Line charges such as, where the Special Access Service accesses only FGA and no local exchange lines, or Special Access Service between customer points of termination, or Special Access Service connecting CCSA or CCSA-type equipment (inter-machine trunks); or

(6) a termination that the customer certifies to the Telephone Company is not connected to a PBX or other device which interconnects the Special Access Service to a local exchange subscriber line.

7.3.3 Exemption of Special Access Service

(A) Special Access Services which are terminated as set forth in 7.3.2(B) preceding will be exempted from the Special Access Surcharge if the customer provides the Telephone Company with written exemption certification. The certification may be provided to the Telephone Company as follows:

- at the time the Special Access Service is ordered or installed;

- at such time as the service is re-terminated to a device which does not interconnect the service to local exchange facilities; or

- at such time as the service becomes associated with a Switched Access Service that is subject to Carrier Common Line Charges.

7. Special Access Service (Cont'd)

7.3 Surcharge for Special Access Service (Cont'd)

7.3.3 Exemption of Special Access Service (Cont'd)

(B) The exemption certification is to be provided by the customer ordering the service. The certification must be signed by the customer or authorized representative and include the category of exemption, as set forth in 7.3.2(B) preceding, for each termination, and the date which the exemption is effective.

(C) The customer shall also notify the Telephone Company when an exempted Special Access Service is changed or reterminated such that the exemption is no longer applicable.

(D) The Telephone Company will work cooperatively with the customer to resolve any questions regarding the exemption certification. In addition, the Telephone Company may withhold exemption of the service until the questions are resolved.

7.3.4 Rate Regulations

(A) The surcharge will apply as set forth in 7.3.2(A) preceding, except that a surcharge will be assessed on a per voice grade equivalent basis for Special Access Services derived from High Capacity Special Access Services as illustrated in the following example:

Special Access Service	Voice Grade Equivalent		Surcharge		Monthly Charge
DS1	24	x	$25	=	$600.00

The preceding example illustrates the maximum number of surcharges applicable to a DS1. If the customer claims exemption(s) as set forth in 7.3.3 preceding or, is not utilizing all available voice grade equivalents and has spare capacity, the number of surcharges would be reduced accordingly.

In the case of multipoint Special Access Services, one Special Access Surcharge will apply for each termination of a Special Access Channel at an end user's premises.

7. Special Access Service (Cont'd)

7.3 Surcharge for Special Access Service (Cont'd)

7.3.4 Rate Regulations (Cont'd)

(B) The Telephone Company will bill the appropriate Special Access Surcharge to the ordering customer for each interstate Special Access Service installed unless exemption certification is provided as set forth in 7.3.3 preceding.

(C) If a written certification is not received at the time the Special Access Service is obtained, the Surcharge will be applied. Exempt status will become effective on the certification date indicated by the customer, subject to the regulations set forth in (D) following.

(D) Crediting the Surcharge

The Telephone Company will cease billing the Special Access Surcharge when certification, as set forth in 7.3.3. preceding, is received. If the status of the Special Access Service was changed prior to receipt of the exemption certification, the Telephone Company will credit the customer's account, not to exceed ninety (90) days, based on the effective date of the change as specified by the customer in the letter of certification.

7. Special Access Service (Cont'd)

7.4 Metallic Service

7.4.1 Basic Channel Description

A Metallic channel is an unconditioned two-wire channel arranged to transmit direct current and capable of transmitting low speed varying signals at rates up to 30 baud. This channel is provided by metallic or equivalent facilities. Metallic channels are provided between customer designated premises or between a customer designated premises and a Telephone Company hub or hubs where bridging functions are performed. Interoffice metallic facilities will be limited in length to a total of five miles per channel.

Metallic Special Access Services are typically used for applications such as alarm, pilot wire protective relaying, and dc tripping protective relaying. These examples of applications are not intended to limit a customer's use of the channel nor to imply that the channel is limited to a particular use.

Rates and charges for Special Access Metallic Service are as set forth in Section 17 following.

7.4.2 Technical Specifications Packages and Network Channel Interfaces

Technical Specifications Packages are set forth in 15.2.1(A) following. Compatible network channel interfaces are set forth in 15.2.2(C)(1) following.

7.4.3 Optional Features and Functions

Central Office Bridging Capability

(A) Three Premises Bridging - Provision of tip-to-tip and ring-to-ring connection in a central office of a metallic pair to a third customer designated premises.

(B) Series Bridging of up to 26 customer designated premises.

The table set forth in 15.2.1(A) following shows the technical specifications packages with which the optional features and functions are available.

7. Special Access Service (Cont'd)

7.4 Metallic Service

7.4.3 Optional Features and Functions (Cont'd)

(C) DSL Access Service Connection

(1) The DSL Access Service Connection function provides for the interconnection of a customer's Ethernet-based local area network (LAN) with ADSL Access Service and Technical Reference ANSI T1.413-1998. This function provides the ability to transmit data at speeds of up to 10 Mbps (i.e., 10BASE-T) or 100 Mbps (i.e., 100BASE-T) over distances no greater than 300 feet as specified in Technical Reference IEEE Std. 802.3, Part 3, Clause 14 for 10BASE-T and Clauses 21 and 29 for 100BASE-T.

Rates and charges for the 10Base-T and 100BASE-T DSL Access Service Connection functions are as set forth in Section 17.5.8(C)(2), following. Each 10BASE-T function requires two unconditioned two-wire Metallic Service Channel Terminations to be terminated at the DSL Access Service Connection Point. Each 100BASE-T function requires two unconditioned two-wire Metallic Service Channel Terminations to be terminated at the DSL Access Service Connection Point.

7. Special Access Service (Cont'd)

7.5 Telegraph Grade Service

7.5.1 Basic Channel Description

Telegraph Grade channel is an unconditioned channel capable of transmitting binary signals at rates of 0-75 baud or 0-150 baud. This channel is furnished for half- duplex or duplex operation. Telegraph Grade channels are provided between customer designated premises or between a customer designated premises and a Telephone Company hub or hubs.

Telegraph Grade Special Access Services are typically used for applications such as teletypewriter, telegraph grade control/remote metering, telegraph grade channel, telegraph grade extension, and telegraph grade entrance facilities. These examples of applications are not intended to limit a customer's use of the channel nor to imply that the channel is limited to a particular use.

Rates and charges for Special Access Telegraph Grade Service are as set forth in Section 17 following.

7.5.2 Technical Specifications Packages and Network Channel Interfaces

Technical Specifications Packages are set forth in 15.2.1(B) following. Compatible network channel interfaces are set forth in 15.2.2(C)(2) following.

7.5.3 Optional Features and Functions

Telegraph Bridging (two-wire and four-wire)

The table set forth in 15.2.1(B) following shows the technical specifications packages with which the optional features and functions are available.

7. Special Access Service (Cont'd)

7.6 Voice Grade Service

7.6.1 Basic Channel Description

A Voice Grade channel is a channel which provides voice frequency transmission capability in the nominal frequency range of 300 to 3000 Hz and may be terminated as two-wire or four-wire. Voice Grade channels are provided between customer designated premises, between a customer designated premises and a Telephone Company hub or hubs, or between a customer designated premises and a WATS Serving Office (WSO).

Voice Grade Special Access Services are typically used for voice and voiceband data applications. Typical examples of voice grade circuits are Foreign Exchange lines (station end only), multipoint private line, voice trunk type, two-point voice grade data (one-way or simultaneous two-way), multipoint voice grade data, and voice grade telephoto or facsimile. These examples of applications are not intended to limit a customer's use of the channel nor to imply that the channel is limited to a particular use.

Rates and charges for Special Access Voice Grade Service are as set forth in Section 17 following.

7.6.2 Technical Specifications Packages and Network Channel Interfaces

Technical Specifications Packages are set forth in 15.2.1(C) following. Compatible network channel interfaces are set forth in 15.2.2(C)(3) following.

7.6.3 Optional Features and Functions

(A) Central Office Bridging Capability

(1) Voice Bridging (two-wire and four-wire)

(2) Data Bridging (two-wire and four-wire)

(3) Telephoto Bridging (two-wire and four-wire)

(4) DATAPHONE Select-A-Station Bridging with sequential arrangement ports or addressable arrangement ports

7. Special Access Service (Cont'd)

7.6 Voice Grade Service (Cont'd)

7.6.3 Optional Features and Functions (Cont'd)

(A) Central Office Bridging Capability (Cont'd)

(5) Telemetry and Alarm Bridging
Split Band, Active Bridging
Passive Bridging
Summation, Active Bridging

The rates for these options are set forth in Section 17 following.

(B) Central Office Multiplexing

Voice to Telegraph Grade. An arrangement that converts a Voice Grade channel to Telegraph Grade channels using frequency division multiplexing.

The rate for this option is set forth in Section 17 following.

(C) Conditioning

Conditioning provides more specific transmission characteristics for Voice Grade services. The rates for these options are set forth in Section 17 following.

For two-point services, the parameters apply to each service as measured end-to-end. For multipoint services, the parameters apply as measured on each mid-link or as measured on each end link. C-Type conditioning and Data Capability may be combined on the same service.

7. Special Access Service (Cont'd)

7.6 Voice Grade Service (Cont'd)

7.6.3 Optional Features and Functions (Cont'd)

(C) Conditioning (Cont'd)

(1) C-Type Conditioning

C-Type Conditioning is provided for the additional control of attenuation distortion and envelope delay distortion on data services. The attenuation distortion and envelope delay distortion specifications for C-Type Conditioning are delineated in Technical Reference TR-TSY-000335.

(2) Improved Attenuation Distortion*

Improved Attenuation Distortion upgrades the frequency versus loss limits of the channel. The technical specifications for Improved Attenuation Distortion are delineated in Technical Reference TR-TSY-000335. This option is available only when ordered in combination with C-Type Conditioning.

(3) Improved Envelope Delay Distortion*

Improved Envelope Delay Distortion upgrades the frequency versus delay response limits of the channel. The technical specifications for Improved Envelope Delay Distortion are delineated in Technical Reference TR-TSY-000335. This option is available only when ordered in combination with C-Type Conditioning.

* Improved Attenuation Distortion and Improved Envelope Delay Distortion will continue to be provided to all customers who were provided with either or both of these optional features in conjunction with C-Type Conditioning prior to May 4, 1988.

7. Special Access Service (Cont'd)

7.6 Voice Grade Service (Cont'd)

7.6.3 Optional Features and Functions (Cont'd)

(C) Conditioning (Cont'd)

(4) Data Capability (D Conditioning)

Data Capability provides transmission characteristics suitable for data communications. Specifically, Data Capability provides for the control of Signal to C-Notched Noise Ratio and intermodulation distortion. It is available for two-point services or three-point multipoint services.

The Signal to C-Notched Noise Ratio and intermodulation distortion parameter for Data Capability are delineated in Technical Reference TR-TSY-000335. The rate for this option is set forth in Section 17 following.

When a service equipped with Data Capability is used for voice communications, the quality of the voice transmission may not be satisfactory.

(5) Telephoto Capability

Telephoto Capability provides transmission characteristics suitable for telephotographic communications. Specifically, Telephoto Capability is provided for the control of attenuation distortion and envelope delay distortion on telephotographic services. The attenuation distortion and envelope delay distortion parameters for Telephoto Capability are delineated in Technical Reference TR-TSY-000335. The rate for this option is set forth in Section 17 following.

(6) Sealing Current Conditioning

Sealing Current Conditioning is provided to help maintain continuity on dry metallic loops. It is usually associated with four-wire DA or NO type network channel interfaces.

7. Special Access Service (Cont'd)

7.6 Voice Grade Service (Cont'd)

7.6.3 Optional Features and Functions (Cont'd)

(D) Customer Specified Premises Receive Level

This option allows the customer to specify the receive level at the Point of Termination. The level must be within a specific range on effective four-wire transmission. The ranges are delineated in Technical Reference TR-TSY-000335. The rate for this option is set forth in Section 17 following.

(E) Improved Return Loss

(1) On Effective Four-Wire Transmission at Four-Wire Point of Termination (applicable to each two-wire port): Provides for a fixed 600 ohm impedance, variable level range and simplex reversal. Telephone Company equipment is required at the customer's premises where this option is ordered. The Improved Return Loss parameters are delineated in Technical Reference TR-TSY-000335. The rate for this option is set forth in Section 17 following

(2) On Effective Two-Wire Transmission at Two-Wire Point of Termination: Provides for more stringent Echo Control specifications. In order for this option to be applicable, the transmission path must be four-wire at one POT and two-wire at the other POT. Placement of Telephone Company equipment may be required at the customer's premises with the two-wire POT. The Improved Return Loss parameters are delineated in Technical Reference TR-TSY-000335. The rate for this option is set forth in Section 17 following.

7. Special Access Service (Cont'd)

7.6 Voice Grade Service (Cont'd)

7.6.3 Optional Features and Functions (Cont'd)

(F) Signaling Capability

Signaling Capability provides for the ability to transmit signals from one customer premises to another customer premises on the same service. The rate for this option is set forth in Section 17 following.

The following network channel interfaces for Voice Grade service do not require signaling capability: AH, DA, DB, DD, DE, DS, NO, PR and TF.

The following network channel interfaces for Voice Grade service require signaling capability: AB, AC, CT, DX, DY, EA, EB, EC, EX, GO, GS, LA, LB, LC, LO, LR, LS, RV and SF. The signaling capability charge will not apply when used in the provision of WATS access service.

(G) Selective Signaling Arrangement

An arrangement that permits code selective ringing for up to ten codes on a multipoint service. The rate for this option is set forth in Section 17 following.

7. Special Access Service (Cont'd)

7.6 Voice Grade Service (Cont'd)

7.6.3 Optional Features and Functions (Cont'd)

(H) Transfer Arrangement

An arrangement that affords the customer an additional measure of flexibility in the use of an access channel(s). The arrangement can be utilized to transfer a leg of a Special Access Service to another channel that terminates in either the same or a different customer premises. A key activated or dial-up control service is required to operate the transfer arrangement. A spare channel, if required, is not included as part of the option. The rate for this option is set forth in Section 17 following.

(I) Public Packet Switching Network (PPSN) Interface Arrangement

An arrangement that provides the interface requirements that permit a Voice Grade service to interface with a Public Packet Switching Network packet switch located in a Telephone Company premises.

(J) Four-Wire/Two-Wire Conversions

When a customer requests that an effective four-wire channel be terminated with a two-wire channel interface at the customer designated premises, a four-wire to two-wire conversion is required. The customer will be charged the four-wire Channel Termination rate as set forth in Section 17 following when an effective four-wire is specified in the order for service. The rate for the conversion is included as part of the basic four-wire Channel Termination rate.

7. Special Access Service (Cont'd)

7.6 Voice Grade Service (Cont'd)

7.6.3 Optional Features and Functions (Cont'd)

(K) Improved Two-Wire Voice Transmission

(1) Loss Deviation

The maximum Loss Deviation of the 1004 Hz loss relative to the Expected Measured Loss (EML) is -4.0 dB to +4.0 dB.

(2) Attenuation Distortion

The maximum Attenuation Distortion in the 404 to 280 Hz frequency band relative to loss at 1004 Hz is -2.0 dB to +6.0 dB.

(3) C-Message Noise

The maximum C-Message Noise for the transmission path at the route miles listed is less than:

Route Miles	C-Message Noise
less than 50	35 dBrnco
51 to 100	37 dBrnco
101 to 200	40 dBrnco
201 to 400	43 dBrnco
401 to 1000	45 dBrnco

(4) Return Loss

The Return Loss, expressed as Echo Return Loss (ERL) and Singing Return Loss (SRL), is equal to or greater than:

ERL	13.0 dB
SRL	6.0 dB

The rate for the provision of Improved Two-Wire Voice Transmission is included as part of the basic Channel Termination rate.

7. Special Access Service (Cont'd)

7.7 Program Audio Service

7.7.1 Basic Channel Description

A Program Audio channel is a channel with bandwidth measured in Hz for the transmission of a complex signal voltage. The actual bandwidth is a function of the channel interface selected by the customer. Only one-way transmission is provided. Program Audio channels are provided between customer designated premises or between a customer designated premises and a Telephone Company hub or hubs.

Program Audio Special Access services are typically used in full-time and part-time applications for radio broadcasting, noncommercial educational audio, and wired music. These examples of applications are not intended to limit a customer's use of the channel nor to imply that the channel is limited to a particular use.

Rates and charges for Special Access Program Audio Service are as set forth in Section 17 following.

7.7.2 Technical Specifications Packages and Network Channel Interfaces

Technical Specifications Packages are set forth in 15.2.1(D) following. Compatible network channel interfaces are set forth in 15.2.2(C)(4) following.

7.7.3 Optional Features and Functions

(A) Central Office Bridging Capability
Distribution Amplifier

(B) Gain Conditioning
Control of 1004 Hz AML at initiation of service to 0 dB ± 0.5 dB.

(C) Stereo
Provision of a pair of gain/phase equalized channels for stereo applications. (An additional Program Audio channel must be ordered separately.)

The table set forth in 15.2.1(D) following shows the technical specifications packages with which the optional features and functions are available.

7. Special Access Service (Cont'd)

7.8 Digital Data Service

7.8.1 Basic Channel Description

A Digital Data channel is a channel for duplex four-wire transmission of synchronous serial data at the rate of 2.4, 4.8, 9.6, 19.2, 56.0 or 64.0* Kbps. The actual bit rate is a function of the channel interface selected by the customer. The channel provides a synchronous service with timing provided by the Telephone Company through the Telephone Company's facilities to the customer in the received bit stream. Digital Data channels are provided as either hubbed or non-hubbed services between customer designated premises or between a customer designated premises and a Telephone Company hub or hubs. The hubs providing hubbed digital service and the wire centers providing non-hubbed digital service are identified in National Exchange Carrier Association, Inc., Wire Center Information, Tariff F.C.C. No. 4.

The Telephone Company will provide a channel capable of meeting a monthly average performance equal to or greater than 99.875% error-free seconds (if provided through a Digital Data hub) while the channel is in service, if it is measured through a CSU equivalent which is designed, manufactured, and maintained to conform with the specifications contained in Technical Reference PUB 62310.

Rates and charges for Special Access Digital Data Service are as set forth in Section 17 following.

7.8.2 Technical Specifications Packages and Network Channel Interfaces

Technical Specifications Packages are set forth in 15.2.1(F) following. Compatible channel interfaces are set forth in 15.2.2(C)(6) following.

* When 64.0 Kbps service is multiplexed on a DS1 High Capacity service, the DS1 must be equipped to provide Clear Channel Capability.

7. Special Access Service (Cont'd)

7.8 Digital Data Service (Cont'd)

7.8.2 Technical Specifications Packages and Network Channel Interfaces (Cont'd)

The following network channel interfaces (NCIs) define the bit rates that are available for a Digital Data channel:

NCI	Bit Rate
DU-24	2.4 Kbps
DU-48	4.8 Kbps
DU-96	9.6 Kbps
DU-19	19.2 Kbps
DU-56	56.0 Kbps
DU-64	64.0 Kbps

7.8.3 Optional Features and Functions

The Optional Features and Functions described in (A), (B), and (C) following are only available where Digital Data Service is provided via a hub. The Optional Features and Functions described in (D) following are available where Digital Data Service is provided on a non-hubbed basis.

(A) Central Office Bridging Capability

Bridging is not available on a 64.0 Kbps channel.

(B) Transfer Arrangement

An arrangement that affords the customer an additional measure of protection and/or flexibility in the use of their access channel(s) on a 1xN basis. The arrangement can be utilized to transfer a leg of a Special Access Service to either a spare or working channel that terminates in either the same or a different customer designated premises. This arrangement is only available at a Telephone Company designated hub. A key activated or dial-up control service is required to operate the transfer arrangement. A spare channel, if required, is not included as a part of the option.

7. Special Access Service (Cont'd)

7.8 Digital Data Service (Cont'd)

7.8.3 Optional Features and Functions (Cont'd)

(C) Public Packet Switching Network (PPSN) Interface Arrangement

An arrangement that provides the interface requirements that permit a Digital Data Service to interface with a Public Packet Switching Network packet switch located in a Telephone Company premises. The interface is compatible with X.25 and X.75 packet switching protocols as defined by the CCITT.

The table set forth in 15.2.1(F) following shows the technical specifications packages with which the optional features and functions are available.

(D) Public Packet Data Service Interface Arrangement

An arrangement that provides for the interface requirements that permit a Digital Data Service to interface with a Public Packet Data switch located in a Telephone Company premises. The interface is compatible with Frame Relay packet switching protocols. The interface is only available for 56.0 kbps and 64.0 kbps rates.

The table set forth in 15.2.1(F) following shows the technical specifications packages with which the optional features and functions are available.

7. Special Access Service (Cont'd)

7.9 High Capacity Service

7.9.1 Basic Channel Description

A High Capacity channel is a channel for the transmission of nominal 64.0 Kbps* or 1.544, or 44.736 Mbps isochronous serial data. The actual bit rate is a function of the channel interface selected by the customer. High Capacity channels are provided between customer designated premises or between a customer designated premises and a Telephone Company hub or hubs. In addition, 1.544 Mbps and 44.736 Mbps High Capacity Service channels may be provided between a customer designated premises and a Telephone Company designated ADSL Access Service Connection Point and/or between a customer designated premises and a wire center equipped with Asynchronous Transfer Mode Cell Relay Access Service.

The customer may provide the Network Channel Terminating Equipment associated with the High Capacity channel at the customer's premises.

A channel with technical specifications package HC1 will be capable of an error-free second performance of 98.75% over a continuous 24 hour period as measured at the 1.544 Mbps rate through a CSU equivalent which is designed, manufactured, and maintained to conform with the specifications contained in Technical Reference PUB 62411.

Rates and charges for Special Access High Capacity Service are as set forth in Section 17 following.

* Available only as a channel of a 1.544 Mbps facility to a Telephone Company Digital Data hub or as a cross connect of two 2.4, 4.8, 9.6, 56.0 or 64.0 Kbps channels of two 1.544 Mbps facilities to a Digital Data hub(s). The customer must provide system and channel assignment data.

7. Special Access Service (Cont'd)

7.9 High Capacity Service (Cont'd)

7.9.2 Technical Specifications Packages and Network Channel Interfaces

Technical Specifications Packages are set forth in 15.2.1(G) following. Compatible channel interfaces are set forth in 15.2.2(C)(7) following.

The following network channel interfaces (NCIs) define the bit rates that are available for a High Capacity channel:

NCI	Bit Rate
DS-15*	1.544 Mbps (DS1)
DS-44	44.736 Mbps (DS3)

* A 64.0 Kbps channel is available as a channel(s) of a 1.544 Mbps channel to a Telephone Company hub.

7. Special Access Service (Cont'd)

7.9 High Capacity Service (Cont'd)

7.9.3 Optional Features and Functions

(A) Automatic Loop Transfer

The Automatic Loop Transfer provides protection on a 1xN basis against failure of the facilities between a customer designated premises and the wire center serving that premises. Protection is furnished through the use of a switching arrangement that automatically switches to a spare channel line when a working line fails. The spare channel is not included as a part of the option. This option requires compatible equipment at both the serving wire center and the customer designated premises. The customer is responsible for providing the equipment at its designated premises. Equipment at the customer designated premises will be provided under tariff only if it existed in the Telephone Company inventory as of November 18, 1983.

(B) Transfer Arrangement

An arrangement that affords the customer an additional measure of flexibility in the use of their access channel(s). The arrangement can be utilized to transfer a leg of a Special Access Service to either a spare or working channel that terminates in either the same or a different customer designated premises. A key activated or dial-up control service is required to operate the transfer arrangement. A spare channel, if required, is not included as part of the option.

7. Special Access Service (Cont'd)

7.9 High Capacity Service (Cont'd)

7.9.3 Optional Features and Functions (Cont'd)

(C) Central Office Multiplexing

(1) DS3 to DS1

An arrangement that converts a 44.736 Mbps channel to 28 DS1 channels using digital time division multiplexing.

(2) DS1 to Voice

An arrangement that converts a 1.544 Mbps channel to 24 channels for use with Voice Grade Services. A channel(s) of this DS1 to the Hub can also be used for a Digital Data Service.

(3) DS1 to DS0

An arrangement that converts a 1.544 Mbps channel to 23 64.0 Kbps channels utilizing digital time division multiplexing.

7. Special Access Service (Cont'd)

7.9 High Capacity Service (Cont'd)

7.9.3 Optional Features and Functions (Cont'd)

(C) Central Office Multiplexing (Cont'd)

(7) DS0 to Subrate

An arrangement that converts a 64.0 Kbps channel to subspeeds of up to twenty 2.4 Kbps, ten 4.8 Kbps, or five 9.6 Kbps channels using digital time division multiplexing. The table set forth in 15.2.1(G) following shows the technical specifications packages with which the optional features and functions are available.

(D) Clear Channel Capability (CCC)

(1) CCC is an arrangement that allows a customer to transport 1.536 Mbps information rate signals over a 1.544 Mbps High Capacity channel or over a 1.544 Mbps High Capacity channel derived from a multiplexed 44.736 Mbps High Capacity channel with no constraint on the quantity or sequence of one and zero bits. This arrangement requires the customer signal at the channel interface to conform to Bipolar with Eight Zero Substitution (B8ZS) line code as described in Technical Reference TR-NPL-000054 and Technical Reference TR-INS-000342.

(2) CCC is provided, subject to availability of facilities, on DS1/1.544 Mbps High Capacity channels between two customer designated premises and on multiplexed DS3/44.736 Mbps High Capacity channels or multiplexed DS1/1.544 Mbps High Capacity channels*between a Telephone Company hub office and a customer designated premises. The wire centers providing CCC are identified in National Exchange Carrier Association, Inc., Wire Center Information, Tariff F.C.C. No. 4.

(3) The CCC optional feature may be ordered at the same time the High Capacity service is ordered or it may be ordered as an addition to an existing High Capacity Service. The customer must agree to out-of-service periods required to add this feature to an existing High Capacity Service. The charges for the CCC optional feature are as set forth in 7.2.2(C)(3) preceding.

(E) ADSL Access Service Connection

(1) The ADSL Access Service Connection function provides for the interconnection of a 1.544 Mbps or 44.736 Mbps High Capacity Service as described in Section 8, following.

Rates and charges for the ADSL Access Service Connection function are as set forth in Section 17, following. This function applies to each 1.544 Mbps or 44.736 Mbps High Capacity Service terminated at an ADSL Access Service Connection Point.

* Available only on a DS1-to-Digital multiplexed configuration.

7. Special Access Service (Cont'd)

7.9 High Capacity Service (Cont'd)

7.9.3 Optional Features and Functions (Cont'd)

(F) Shared SONET Ring Interoffice Transport

(1) Shared SONET Ring Interoffice Transport (SSRIT) is a non-chargeable optional feature which provides interoffice transmission of a DS3 High Capacity Service over SONET- based facility deployed in a ring configuration. Shared SONET Ring Interoffice Transport provides increased reliability and functionality using self-healing ring topology designed to continually monitor service quality, detect any failure within the system, and automatically self-heal within 50 milliseconds around a point of failure by switching to a protect path to ensure the flow of services between locations within the self-healing ring.

(2) Shared SONET Ring Interoffice Transport is provided for the interoffice portion of DS3 High Capacity Service, subject to availability of SONET ring facilities. The wire centers offering Shared SONET Ring Interoffice Transport are identified in National Exchange Carrier Association, Inc., Wire Center Information, Tariff F.C.C. No. 4.

(3) The Shared SONET Ring Interoffice Transport optional feature may be ordered at the same time the DS3 High Capacity service is ordered or it may be ordered as an addition to an existing DS3 High Capacity Service. The customer must agree to out-of-service periods required to add this feature to an existing DS3 High Capacity Service. The charges for the Shared SONET Ring Interoffice Transport optional feature are set forth in 7.10.3 (D) following.

7. Special Access Service (Cont'd)

7.10 Synchronous Optical Channel Service

7.10.1 Basic Channel Description

A Synchronous Optical Channel Service (SOCS) channel provides dedicated transport utilizing Synchronous Optical Network (SONET) transmission standards. Synchronous Optical Channel Service provides optical network capability to customers requiring connections at transmission rates of 155.52 Mbps (OC3), 622.08 Mbps (OC12), and 2.4 Gbps (OC48). Synchronous Optical Channel Service is provided between two customer designated premises (CDP) through one or more Telephone Company wire centers, or between a CPD and a wire center equipped with Asynchronous Transfer Mode Cell Relay Access Service, or between a CDP and a wire center equipped with Add/Drop Multiplexing (ADM). In addition, customers at an ADM equipped wire center may add or drop bandwidth capacity from the synchronous optical channel for delivery to a customer designated premises, WATS office, Public Packet Data Network Service, or another wire center.

Synchronous Optical Channel Service may also be provided between a customer designated premises and a Telephone Company designated DSL Access Service Connection Point. When a customer orders SOCS, the customer and the Telephone Company will work cooperatively to plan, engineer, provision and manage the SOCS.

Each channel will be configured with one working and one protect fiber pair within the same sheath between the CDP and the serving wire center of the CDP which provides redundancy to protect the customers service. Should a failure occur, the SONET technology will automatically switch the customer's transmission to the dedicated fiber pair.

The customer may provide node and port equipment at the CDP which allows the high speed optical carrier channel to be converted to an electrical signal at a lower speed. The provision of such equipment by the customer is subject to compatibility with the Telephone Company's equipment in the serving wire center and must comply with the standards specified in GR-253-CORE.

The Synchronous Optical Channel is available in a non-concatenated format which provides three individual signals. The Synchronous Optical Channel is also available in a concatenated format which provides a single signal appropriate for data transmissions.

7. Special Access (Cont'd)

7.10 Synchronous Optical Channel Service (Cont'd)

7.10.1 Basic Channel Description (Cont'd)

A term discount is available for Synchronous Optical Channel Service rate elements and optional features and functions.

Synchronous Optical Channel Service is available at the wire centers as identified in National Exchange Carrier Association, Inc. Tariff F.C.C. No. 4.

Rates and charges for Synchronous Optical Channel Service are set forth in 17.6.9 following.

7. Special Access Service (Cont'd)

7.10 Synchronous Optical Channel Service (Cont'd)

7.10.2 Network Channel Interfaces

Compatible channel interfaces for Synchronous Optical Channel Service are set forth in 15.2.2 (C) (8) following.

The following network channel interfaces (NCIs) define the bit rates that are available for a synchronous optical channel:

NCI	Bit Rate	
FCF-B	155.52 Mbps	(OC3, OC3c)
FCF-D	622.08 Mbps	(OC12)
	2.4 Gbts	(OC 48)

7.10.3 Optional Features and Functions

(A) Customer Node

A customer node charge applies when the Telephone Company provides terminal equipment at the customer designated premises for termination of a Synchronous Optical Channel Service Channel Termination. Such equipment may be used to convert the signal from an optical to electrical format. The customer node charge is determined by the level of optical signal (i.e., OC3, OC3c, OC12 or OC48) delivered to the premises. Each Customer Node must be configured with one or more Customer Premises Ports.

Rates and charges for the Customer Node are as set forth in 17.6.9 (D) (1) following.

7. Special Access Service (Cont'd)

7.10 Synchronous Optical Channel Service (Cont'd)

7.10.3 Optional Features and Functions (Cont'd)

(B) Customer premises Port

Customer Premises Port charges apply in conjunction with the Customer Node charge. Each Customer Premises Port provides the interface to derive a lower capacity service at the customer premises. The type and quantity of ports is determined by the customer and is based on the type of Customer Node selected and the number of DS1, DS3, STS-1 and/or OC3/OC3c etc. channels ordered. Customer Premises Ports are available at the following speeds:

Customer Premises Ports	Speed
OC12	622.08 Mbps
OC3, OC3c	155.52 Mbps
STS-1	51.84 Mbps
DS3	44.736 Mbps
DS1	1.544 Mbps

Rate and charges for the Customer Premises Port are set forth in 17.6.9 (D) (1) following.

(C) Add/Drop Multiplexing

An Add/Drop Multiplexing Central Office Port charge applies to the interface provided at the Telephone Company wire center for the purpose of adding or dropping lower capacity services from Synchronous Optical Channel Service Channel Termination or Channel Mileage transport facilities. Central Office Ports are available at the following speeds:

Central Office Port	Speed
OC12	622.08 Mbps
OC3, OC3c	155.52 Mbps
STS-1	51.84 Mbps
DS3	44.736 Mbps
DS1	1.544 Mbps

OC48 service may only be multiplexed to OC12. OC12 service may only be multiplexed to OC3/OC3c channels.

7. Special Access Service (Cont'd)

7.10 Synchronous Optical Channel Service (Cont'd)

7.10.3 Optional Features and Functions (Cont'd)

(C) Add/Drop Multiplexing (Cont'd)

When an OC12/OC3 channel is derived from an OC48/OC12 service and is further multiplexed to obtain DS3 service, a DS3 port charge will apply in addition to the OC12/OC3 Port charge.

When a DS3 channel is derived from an OC3 service and is further multiplexed to obtain DS1 service, a DS3 to DS1 Multiplexing charge as set forth in 17.6.9 (D) (3) will apply in addition to the DS3 port charge.

When a DS1 channel is directly derived from an OC3 service, a DS1 port charge will apply.

When a DS1 channel is further multiplexed to a lower level signal, a DS1 to Voice Grade Multiplexing charge as set forth in 17.5.8 (C) (1) will also apply.

Rates and charges for the Central Office Port are set forth in 17.5.8 (C) (1) following.

7. Special Access Service (Cont'd)

7.10 Synchronous Optical Channel Service (Cont'd))

7.10.3 Optional Features and Functions (Cont'd)

(D) Shared SONET Ring Interoffice Transport

(1) Shared SONET Ring Interoffice Transport (SSRIT) is a non-chargeable optional feature which provides interoffice transmisson of a Synchronous Optical Channel Service over SONET- based facility deployed in a ring configuration. Shared SONET Ring Interoffice Transport provides increased reliability and functionality using self-healing ring topology designed to continually monitor service quality, detect any failure within the system, and automatically self-heal within 50 milliseconds around a point of failure by switching to a protect path to ensure the flow of services between locations within the self-healing ring.

(2) Shared SONET Ring Interoffice Transport is provided for the interoffice portion of Synchronous Optical Channel Service, subject to availability of SONET ring facilities. The wire centers offering Shared SONET Ring Interoffice Transport are identified in National Exchange Carrier Association, Inc., Wire Center Information, Tariff F.C.C. No. 4.

(3) The Share SONET Ring Interoffice Transport optional feature may be ordered at the same time the Synchronous Optical Channel Service is ordered or it may be ordered as an addition to an existing Synchronous Optical Channel Service. The customer must agree to out-of-service periods required to add this feature to an existing Synchronous Optical Channel Service. The charges for the Shared SONET Ring Interoffice Transport optional feature are set forth in 7.10.3 (D) (1) preceding.

7. Special Access Service (Cont'd)

7.10 Synchronous Optical Channel Service (Cont'd)

7.10.3 Optional Features and Functions (Cont'd)

(E) DSL Access Service Connection

The DSL Access Service Connection function provides for the interconnection of an OC3/ OC3c Synchronous Optical Channel Service with ADSL Access Service as described in 8.1, following and Technical Reference ANSI T1.413-1998.

Rates and charges for the DSL Access Service Connection function are set forth in 17.6.9 (D) (5), following. This function applies to each OC3/ OC3c Synchronous Optical Channel terminated at an DSL Access Service Connection Point.

7. Special Access Service (Cont'd)

7.11 Ethernet Transport

7.11.1 Basic Service Description

Ethernet Transport (ET) service is a high speed data transport service that provides point-to-point transmissions of customers' data communications that customers deliver to the Telephone Company in a fast packet based ethernet protocol. ET is available at nine transport speeds: 10 Mbps, 20 Mbps, 50 Mbps, 100 Mbps, 150 Mbps, 300 Mbps, 450 Mbps, 600 Mbps and 1 Gbps.

ET is provided on a month-to-month basis or for periods of one, three or five years. When a customer orders ET, the customer and the Telephone Company will work cooperatively to plan, engineer, provision and manage the ET circuits. ET is only available where facilities and operating conditions exist.

(A) Ethernet Transport Channel Termination

ET channel terminations may be used to connect the following:

- a customer designated premises to the serving wire center of that premises.

7. Special Access Service (Cont'd)

7.11 Ethernet Transport (Cont'd)

7.11.1 Basic Service Description (Cont'd)

(A) Ethernet Transport Channel Termination (Cont'd)

The ET channel termination rate element may vary based on distance. The mileage used to determine the monthly rate for channel terminations located outside a Telephone Company Central Office is the airline distance between the customer's designated premises and the Telephone Company serving wire center. The mileage measurement is determined by utilizing exchange maps and mileage tables located in designated Telephone Company offices for such purposes.

ET channel terminations provided to a customer's designated premises will be installed in a single, common space under Telephone Company control. An ET channel termination may not be split between premises or terminated in multiple locations within a premises. The customer must provide suitable floor space, environmental controls and non-switched AC power to support the ET channel termination at the customer's premises location.

7. Special Access Service (Cont'd)

7.11 Ethernet Transport (Cont'd)

7.11.1 Basic Service Description (Cont'd)

(B) Ethernet Transport Channel Mileage

Ethernet Transport channel mileage provides transport between two Telephone Company serving wire centers. Air mileage is measured using V&H coordinates between the Telephone Company serving wire centers. The ET channel mileage rates are made up of the Channel Mileage Facility (per mile) rate and the Channel Mileage Termination (fixed) rate.

Rates and charges for ET are set forth in 17.5.9 following.

7.11.2 Technical Specifications

The technical specifications for the protocols transmitted over Ethernet Transport service are delineated in the following technical publications:

Protocol	Publication
10 Mbps Ethernet	ANSI / IEEE X3.802.3
100 Mbps Ethernet	ANSI / IEEE X3.802.3u
1 Gbps Ethernet	ANSI / IEEE X3.802.3z

7. Special Access Service (Cont'd)

7.11 Ethernet Transport (Cont'd)

7.11.3 Service Components

The following diagram depicts a generic view of the components of Ethernet Transport service:

Ethernet Transport Service

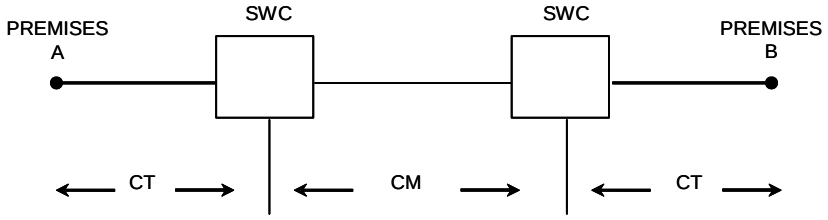

CT - Channel Termination
CM - Channel Mileage
SWC - Serving Wire Center

8. Reserved For Future Use

9. Reserved For Future Use

10. Special Federal Government Access Services

10.1 General

This section covers Special Access Services that are provided to a customer for use only by agencies or branches of the Federal Government and other users authorized by the Federal Government. Services provided to state emergency operations centers are included. These services provide for command and control communications, including communications for national security, emergency preparedness and presidential requirements. They are required to assure continuity of Government in emergency and crisis situations and to provide for national security.

Services for command and control communications and for national security and emergency preparedness sometimes require short notice and short duration service provisions. These provisions are especially needed to meet presidential requirements or in response to natural, man-made, or declared emergencies. Requirements of this type cannot be forecasted and are usually needed for a relatively short period. The provision of service under these conditions may require the availability of facilities, such as portable microwave equipment, which are provided on a temporary basis by the Telephone Company or customer.

10.2 Emergency Conditions

These services will be provided on the date requested or as soon as possible thereafter when the emergency falls into one of the following categories:

- State of crisis declared by the National Command Authorities (includes commitments made to the National Communications System in the "National Plan for Emergencies and Major Disasters").

- Efforts to protect endangered U.S. personnel or property both in the U.S. and abroad. (Includes space vehicle recovery and protection efforts.)

- Communications requirements resulting from hostile action, a major disaster or a major civil disturbance.

- The Director (Cabinet level) of a Federal department,

- Commander of a Unified/Specified Command, or head of a military department has certified that a communications requirement is so critical to the protection of life and property or to the National Defense that it must be processed immediately.

- Political unrest in foreign countries which affect the national interest.

- Presidential service.

10. Special Federal Government Access Services (Cont'd)

10.3 Facility Availability

In order to insure communications during periods of emergency, the Telephone Company will, within the limits of good management, make available the necessary facilities to restore service in the event of damage or to provide temporary emergency service.

In order to meet the requirements of agencies or branches of the Federal Government, the Telephone Company may utilize government-owned facilities, when necessary to provide service.

10.4 Federal Government Regulations

In accordance with Federal Government Regulations, all service provided to the Federal Government will be billed in arrears. However, this provision does not apply to other customers that obtain services under the provisions of this tariff to provide their services to the Federal Government.

10.5 Service Offerings to the Federal Government

The following unique services are provided to a customer for use only by agencies or branches of the Federal Government, other authorized users and state emergency operations centers. The rates and charges for these services shall be developed on an individual case basis and shall be consistent with the rates and charges for services offered in other sections of this tariff.

10.5.1 Type and Description

(A) Voice Grade Special Access Services

(1) Voice Grade Secure Communications Type I

Approximate bandwidth of 10-50,000 Hz. Furnished for two-point secure communications on two-wire or four-wire metallic facilities between a customer designated premises and an end user's premises. Services are conditioned as follows:

T-3 Conditioning - The absolute loss (referenced to 1 milliwatt) with respect to frequency shall not exceed:

15 dB at 10 Hz
13 dB at 100 Hz
9 dB at 1,000 Hz
20 dB at 10,000 Hz
30 dB at 50,000 Hz

10. Special Federal Government Access Services (Cont'd)

10.5 Service Offerings to the Federal Government (Cont'd)

10.5.1 Type and Description (Cont'd)

(A) Voice Grade Special Access Services (Cont'd)

(1) Voice Grade Secure Communications Type I Cont'd)

Additional conditioning (available in one or two directions on four-wire facilities only) to provide the following characteristics:

The absolute loss (referenced to one milliwatt) with respect to frequency shall not exceed:

0 dB at 1,000 Hz
± 1 dB between 1,000 Hz and 40,000 Hz
± 2 dB between 10 Hz and 50,000 Hz
(+ means more loss)

The net loss of the conditioned service (with or without additional conditioning) shall not vary by more than four dB at 1,000 Hz from the levels specified preceding. Voice frequency signaling or supervisory tones can be transmitted.

(2) Voice Grade Secure Communications Type II

Approximate bandwidth 10-50,000 Hz. Furnished on four-wire metallic facilities for duplex operation for two-point secure communications between a customer designated premises and an end user's premises. Services are conditioned as follows:

G-1 Conditioning - The absolute loss with respect to frequency and the net loss variation shall be the same as Voice Grade Secure Communications Type I services without additional conditioning. Voice frequency signaling or supervisory tones can be transmitted.

10. Special Federal Government Access Services (Cont'd)

10.5 Service Offerings to the Federal Government (Cont'd)

10.5.1 Type and Description (Cont'd)

(A) Voice Grade Special Access Services (Cont'd)

(3) Voice Grade Secure Communications Type III

Approximate bandwidth 10-50,000 Hz. Furnished on four-wire metallic facilities for duplex operation for two-point secure communications between a customer designated premises and an end user's premises. Services are conditioned as follows:

G-2 Conditioning - The absolute loss with respect to frequency and the net loss variation from the customer designated premises to the end user's premises shall be the same as Voice Grade Secure Communications Type I services without additional conditioning; from the end user's premises to the customer designated premises shall be the same as Voice Grade Secure Communications Type I services with additional conditioning. Voice frequency signaling or supervisory tones can be transmitted.

(4) Voice Grade Secure Communications Type IV

Approximate bandwidth 10-50,000 Hz. Furnished on four-wire metallic facilities for duplex operation for two-point secure communication between two customer designated premises. Services are conditioned as follows:

G-3 Conditioning - The absolute loss with respect to frequency and the net loss variation shall be the same in both directions of transmission as Voice Grade Secure Communications Type I services with additional conditioning. Voice frequency signaling or supervisory tones can be transmitted.

10. Special Federal Government Access Services (Cont'd)

10.5 Service Offerings to the Federal Government (Cont'd)

10.5.1 Type and Description (Cont'd)

(B) Wideband Digital Special Access Service
Service arrangements for secured communications to accommodate the transmission of binary digital baseband signals in a random polar format.

(1) Wideband Secure Communications Type I
For transmission at the rate of 18,750 bits per second.

(2) Wideband Secure Communications Type II
For transmission at the rate of 50,000 bits per second.

(3) Wideband Secure Communications Type III
To accommodate the transmission of restored polar two-level facsimile signals with a minimum signal element width of twenty micro-seconds at a rate of 50,000 bits per second.

To accommodate the transmission of binary digital baseband signals in a random polar format at the rate of 50,000 bits per second.

10.5.2 Mileage Application

Mileage, when used for rate application between the serving wire centers of two customer designated premises, shall be determined by the V and H Coordinates Method as set forth in National Exchange Carrier Association, Inc. Tariff F.C.C. No. 4 and administered as set forth in 7.2.5 preceding.

10. Special Federal Government Access Services (Cont'd)

10.6 Rates and Charges

10.6.1 General

The rates and charges for special offerings to the Federal Government, such as those set forth in 10.5 preceding, are developed on an individual case basis and are set forth in Section 17 following.

10.6.2 Voice Grade Special Access

The provision of T-3 and G conditioned services contemplates station and tandem switching operations, using customer provided equipment, as well as Special Access Service. Separate narrow band or voice grade services, where required by the customer provided equipment or switching operation, are furnished in accordance with the applicable sections of this tariff.

10.6.3 Move Charges

(A) When a service without a termination charge associated with that service, as set forth in Section 17 following, is moved to a different building, the nonrecurring charge applies; when moved to a new location in the same building, a charge of one-half of the nonrecurring charge applies.

(B) When service with a termination charge associated with that service, as set forth in Section 17 following, is moved and reinstalled at a new location, the customer may elect:

- to pay the unexpired portion of the termination charge for the service, if any, with the application of a nonrecurring charge and the establishment of a new termination charge for such service at the new location, or

- to continue service subject to the unexpired portion of the termination charge, if any, and pay the estimated costs of moving such service, provided that the customer requests these charges be quoted prior to ordering the service move. Charges for moving such service will be based on estimated costs attributable to the move.

Move charges include the estimated costs of removal, restoration of services or facilities necessitated by the move, transportation, storage, reinstallation, engineering, labor, supervision, materials, administration, and any other specific items of cost directly attributable to the move.

11. Special Facilities Routing of Access Services

11.1 Description

The services provided under this tariff are provided over such routes and facilities as the Telephone Company may elect. Special Facilities Routing is involved when, in order to comply with requirements specified by the customer, the Telephone Company provides Switched Access Service, Special Access Service or Special Federal Government Access Service in a manner which includes one or more of the following conditions:

11.1.1 Diversity

Two or more circuits must be provided over not more than two different physical routes.

11.1.2 Avoidance

A circuit(s) must be provided on a route which avoids specified geographical locations.

11.1.3 Diversity and Avoidance Combined

11.1.4 Cable-Only Facilities

Certain Voice Grade services are provided on Cable-Only Facilities to meet the particular needs of a customer. Service is provided subject to the availability of Cable-Only facilities. In the event of service failure, restoration will be made through the use of any available facilities as selected by the Telephone Company.

Avoidance and Diversity are available on Switched Access Service as set forth in Section 6. preceding; Metallic, Telegraph Grade and Voice Grade Special Access Services as set forth respectively in 7.4, 7.5 and 7.6 preceding and Special Federal Government Access Services as set forth in 10.5 preceding. Cable-Only Facilities are available for Switched Access Service as set forth in Section 6. preceding; Voice Grade Special Access Services as set forth in 7.6 preceding and Special Federal Government Access Services as set forth in 10.5 preceding.

11. Special Facilities Routing of Access Services (Cont'd)

11.1 Description (Cont'd)

In order to avoid the compromise of special routing information, the Telephone Company will provide the required routing information for each specially routed service to only the ordering customer. If requested by the customer, this information will be provided when service is installed and prior to any subsequent changes in routing.

The rates and charges for Special Facilities Routing of Access Services are developed on an individual case basis. Such rates and charges for Special Facilities Routing of Access Services are as set forth in Section 17 following and are in addition to all other rates and charges that may be applicable for services provided under other sections of this tariff.

12. Specialized Service or Arrangements

12.1 General

Specialized Service or Arrangements may be provided by the Telephone Company, at the request of a customer, on an Individual Case Basis if such service or arrangements meet the following criteria:

- The requested service or arrangements are not offered under other sections of this tariff.
- The facilities utilized to provide the requested service or arrangements are of a type normally used by the Telephone Company in furnishing its other services.
- The requested service or arrangements are provided within a LATA.
- The requested service or arrangements are compatible with other Telephone Company services, facilities, and its engineering and maintenance practices.
- This offering is subject to the availability of the necessary Telephone Company personnel and capital resources.

Rates and charges and additional regulations if applicable, for Specialized Service or Arrangements are provided on an Individual Case Basis.

13. Additional Engineering, Additional Labor and Miscellaneous Services

13.1 addresses Additional Engineering. 13.2 addresses Additional Labor (which is comprised of Overtime Installation, Overtime Repair, Standby, Testing and Maintenance with Other Telephone Companies, and Other Labor). 13.3 addresses Miscellaneous Services (which are comprised of Testing Services, Maintenance of Service and Telecommunications Service Restoration Priority). 13.4 addresses Presubscription.

In this section, normally scheduled working hours are an employee's scheduled work period in any given calendar day (e.g., 8:00 a.m. to 5:00 p.m.) for the application of rates based on working hours.

A Miscellaneous Service Order charge as described in 5.4.2 preceding may be applicable to services ordered from this section.

13.1 Additional Engineering

Additional Engineering, including engineering reviews as set forth in 5.4.3 preceding, will be undertaken only after the Telephone Company has notified the customer that additional engineering charges apply as set forth in Section 17 following, and the customer agrees to such charges.

Additional Engineering will be provided by the Telephone Company at the request of the customer only when:

(A) A customer requests additional technical information after the Telephone Company has already provided the technical information normally included on the Design Layout Report (DLR) as set forth in 6.1.5 and 7.1.6 preceding.

(B) Additional Engineering time is incurred by the Telephone Company to engineer a customer's request for a customized service as set forth in 7.1.2 preceding.

(C) A customer requested Design Change requires the expenditure of Additional Engineering time. Such Additional Engineering time is incurred by the Telephone Company for the engineering review as set forth in 5.4.3 preceding. The charge for additional engineering time relating to the engineering review, which is undertaken to determine if a design change is indeed required, will apply whether or not the customer authorizes the Telephone Company to proceed with the Design Change. In this case the Design Change charge, as set forth in Section 17 following, does not apply unless the customer authorizes the Telephone Company to proceed with the Design Change.

13. Additional Engineering, Additional Labor and Miscellaneous Services (Cont'd)

13.2 Additional Labor

Additional Labor is that labor requested by the customer on a given service and agreed to by the Telephone Company as set forth in 13.2.1 through 13.2.5 following. The Telephone Company will notify the customer that Additional Labor charges as set forth in Section 17 following will apply before any additional labor is undertaken. A call-out of a Telephone Company employee at a time not consecutive with the employee's scheduled work period is subject to a minimum charge of four hours. When provisioning or restoring Telecommunications Service Priority services, the Telephone Company will, when possible, notify the customer of the applicability of these Additional Labor charges.

13.2.1 Overtime Installation

Overtime installation is that Telephone Company installation effort outside of normally scheduled working hours.

13.2.2 Overtime Repair

Overtime repair is that Telephone Company effort performed outside of normally scheduled working hours.

13.2.3 Standby

Standby includes all time in excess of one-half (½) hour during which Telephone Company personnel standby to make installation acceptance tests or cooperative tests with a customer to verify facility repair on a given service.

13.2.4 Testing and Maintenance with Other Telephone Companies

Additional testing, maintenance or repair of facilities which connect other telephone companies is that which is in addition to the normal effort required to test, maintain or repair facilities provided solely by the Telephone Company.

13.2.5 Other Labor

Other labor is that additional labor not included in 13.2.1 through 13.2.4 preceding and labor incurred to accommodate a specific customer request that involves only labor which is not covered by any other section of this tariff.

13. Additional Engineering, Additional Labor and Miscellaneous Services (Cont'd)

13.3 Miscellaneous Services

13.3.1 Testing Services

Testing Services offered under this section of the tariff are optional and subject to rates and charges as set forth in Section 17 following. A call-out of a Telephone Company employee at a time not consecutive with the employee's scheduled work period is subject to a minimum charge of four hours. Other testing services, as described in 6.2.4 and 7.1.7 preceding, are provided by the Telephone Company in association with Access Services and are furnished at no additional charge.

Testing Services are normally provided by Telephone Company personnel at Telephone Company locations; however, provisions are made in (B)(2) following for a customer to request Telephone Company personnel to perform Testing Services at the customer designated premises.

The offering of Testing Services under this section of the tariff is made subject to the availability of the necessary qualified personnel and test equipment at the various test locations mentioned in (A) and (B) following.

(A) Switched Access Service

Testing Services for Switched Access are comprised of (a) tests which are the installation of a Switched Access Service, (i.e., Acceptance Tests), (b) tests which are performed after customer acceptance of such access services and which are without charge (i.e., routine testing) and (c) additional tests which are performed during or after customer acceptance of such access services and for which additional charges apply, (i.e., Additional Cooperative Acceptance Tests and in-service tests).

Routine tests are those tests performed by the Telephone Company on a regular basis, as set forth in 6.2.4 preceding which are required to maintain Switched Access Service. Additional in-service tests may be done on an automatic basis (no Telephone Company or customer technicians involved), on a manual basis (Telephone Company technician(s) involved at Telephone Company office(s) and Telephone Company or customer technician(s) involved at the customer designated premises).

Testing services are ordered to the Dial Tone Office for FGA, to the access tandem or end office for FGB (wherever the FGB service is ordered) and to the end office for Feature Groups C and D. Testing Services for Directory Assistance Service not routed through an access tandem is ordered to a Directory Assistance Location for each NPA.

13. Additional Engineering, Additional Labor and Miscellaneous Services (Cont'd)

13.3 Miscellaneous Services (Cont'd)

13.3.1 Testing Services (Cont'd)

(A) Switched Access Service (Cont'd)

(1) Additional Cooperative Acceptance Testing

Additional Cooperative Acceptance Testing of Switched Access Service involves the Telephone Company provision of a technician at its office(s) and the customer provision of a technician at its premises, with suitable test equipment to perform the required tests.

Additional Cooperative Acceptance Tests may, for example, consist of the following tests:

- Impulse Noise
- Phase Jitter
- Signal to C-Notched Noise Ratio
- Intermodulation (Nonlinear) Distortion
- Frequency Shift (Offset)
- Envelope Delay Distortion
- Dial Pulse Percent Break

(2) Additional Automatic Testing

Additional Automatic Testing (AAT) of Switched Access Services (Feature Groups B, C and D), is a service where the customer provides remote office test lines and 105 test lines with associated responders or their functional equivalent. The customer may order, at additional charges, gain-slope and C-notched noise testing and may order the routine tests (1004 Hz loss, C-Message Noise and Balance) on an as-needed or more than routine schedule.

The Telephone Company will provide an AAT report that lists the test results for each trunk tested. Trunk test failures requiring customer participation for trouble resolution will be provided to the customer on an as-occurs basis.

The Additional Tests, (i.e., gain slope, C- notched noise, 1004 Hz loss, C-message noise and balance) may be ordered by the customer at additional charges, 60 days prior to the start of the customer prescribed schedule. The rates for Additional Automatic Tests are as set forth in Section 17 following.

13. Additional Engineering, Additional Labor and Miscellaneous Services (Cont'd)

13.3 Miscellaneous Services (Cont'd)

13.3.1 Testing Services (Cont'd)

(A) Switched Access Service (Cont'd)

(3) Additional Manual Testing

Additional Manual Testing (AMT) of Switched Access Services (Feature Groups A, B, C, and D not routed through an access tandem), is a service where the Telephone Company provides a technician at its office(s) and the Telephone Company or customer provides a technician at the customer designated premises, with suitable test equipment to perform the required tests. Such additional tests will normally consist of gain-slope and C-notched noise testing. However, the Telephone Company will conduct any additional tests which the IC may request.

The Telephone Company will provide an AMT report listing the test results for each trunk tested. Trunk test failures requiring customer participation for trouble resolution will be provided to the customer on a per occurrence basis.

The Additional Manual Tests may be ordered by the customer at additional charges, 60 days prior to the start of the testing schedule as mutually agreed to by the customer and the Telephone Company.

The rates for Additional Manual Testing are as set forth in Section 17 following.

(4) Obligations of the Customer

(A) The customer shall provide the Remote Office Test Line priming data to the Telephone Company, as appropriate, to support routine testing as set forth in 6.2.4(B) preceding or AAT as set forth in 13.3.1(A)(2) preceding.

(B) The customer shall make the facilities to be tested available to the Telephone Company at times mutually agreed upon.

13. Additional Engineering, Additional Labor and Miscellaneous Services (Cont'd)

13.3 Miscellaneous Services (Cont'd)

13.3.1 Testing Services (Cont'd)

(B) Special Access Service

The Telephone Company will provide assistance in performing specific tests requested by the customer.

(1) Additional Cooperative Acceptance Testing

When a customer provides a technician at its premises or at an end user's premises, with suitable test equipment to perform the requested tests, the Telephone Company will provide a technician at its office for the purpose of conducting Additional Cooperative Acceptance Testing on Voice Grade Services. At the customer's request, the Telephone Company will provide a technician at the customer's premises or at the end user premises. These tests may, for example, consist of the following:

- Attenuation Distortion (i.e., frequency response)
- Intermodulation Distortion (i.e., harmonic distortion)
- Phase Jitter
- Impulse Noise
- Envelope Delay Distortion
- Echo Control
- Frequency Shift

(2) Additional Manual Testing

The Telephone Company will provide a technician at its premises, and the Telephone Company or customer will provide a technician at the customer's designated premises with suitable test equipment to perform the requested tests.

(3) Obligation of the Customer

When the customer subscribes to Testing Service as set forth in this section, the customer shall make the facilities to be tested available to the Telephone Company at times mutually agreed upon.

13. Additional Engineering, Additional Labor and Miscellaneous Services (Cont'd)

13.3 Miscellaneous Services (Cont'd)

13.3.2 Maintenance of Service

(A) When a customer reports a trouble to the Telephone Company for clearance and no trouble is found in the Telephone Company's facilities, the customer shall be responsible for payment of a Maintenance of Service charge as set forth in Section 17 following for the period of time from when Telephone Company personnel are dispatched, at the request of the customer, to the customer designated premises to when the work is completed. Failure of Telephone Company personnel to find trouble in Telephone Company facilities will result in no charge if the trouble is actually in those facilities, but not discovered at the time.

(B) The customer shall be responsible for payment of a Maintenance of Service charge when the Telephone Company dispatches personnel to the customer designated premises, and the trouble is in equipment or communications systems provided by other than the Telephone Company or in detariffed CPE provided by the Telephone Company.

In either (A) or (B) preceding, no credit allowance will be applicable for the interruption involved if the Maintenance of Service Charge applies.

13.3.3 Telecommunications Service Priority - TSP

(A) Priority installation and/or restoration of National Security Emergency Preparedness (NSEP) telecommunications services shall be provided in accordance with Part 64.401, Appendix A, of the Federal Communications Commission's (FCC's) Rules and Regulations.

In addition, TSP System service shall be provided in accordance with the guidelines set forth in "Telecommunications Service Priority (TSP) System for National Security Emergency Preparedness (NSEP) Service Vendor Handbook" (NCSH 3-1-2) dated July 9, 1990, and "Telecommunications Service Priority System for National Security Emergency Preparedness Service User Manual" (NCSM 3-1-1).

The TSP System is a service, developed to meet the requirements of the Federal Government, as specified in the Service Vendor's Handbook and Service User's Manual which provides the regulatory, administrative and operational framework for the priority installation and/or restoration of NSEP telecommunications services. These include both Switched and Special Access Services. The TSP System applies only to NSEP telecommunications services, and requires and authorizes priority action by the Telephone Company providing such services.

For Switched Access Service, the TSP System's applicability is limited to those services which the Telephone Company can discreetly identify for priority provisioning and/or restoration.

13. Additional Engineering, Additional Labor and Miscellaneous Services (Cont'd)

13.3 Miscellaneous Services (Cont'd)

13.3.3 Telecommunications Service Priority - TSP (Cont'd)

(B) A Telecommunications Service Priority charge applies as set forth in Section 17 when a request to provide or change a Telecommunications Service Priority is received subsequent to the issuance of an Access Order to install the service.

Additionally, a Miscellaneous Service Order Charge as set forth in Section 17 will apply to Telecommunications Service Priority requests that are ordered subsequent to the initial installation of the associated access service.

A Telecommunications Service Priority charge does not apply when a Telecommunications Service Priority is discontinued or when ordered coincident with an Access Order to install or change service.

In addition, Additional Labor rates as set forth in Section 17 may be applicable when provisioning or restoring Switched or Special Access Services with Telecommunications Service Priority.

When the customer requests an audit or a reconciliation of the Telephone Company's Telecommunications Service Priority records, a Miscellaneous Service Order Charge and Additional Labor rates as set forth in Section 17 are applicable.

13.3.4 Miscellaneous Equipment

(A) Controller Arrangement

This arrangement enables the customer to control up to 48 transfer functions at a Telephone Company central office via a remote keyboard terminal capable of either 300 or 1200 bps operation. Included as part of the Controller Arrangement is a dial-up data station located at the Telephone Company Central Office to provide access to the Controller Arrangement. This dial-up data station consists of a 212A DATAPHONE data set and an appropriate Telephone Company provided channel.

The Controller Arrangement must be located in the same Telephone Company central office as the transfer functions which it controls.

13. Additional Engineering, Additional Labor and Miscellaneous Services (Cont'd)

13.4 Presubscription

Pursuant to the Federal Communications Commission's Memorandum Opinion and Order, CC Docket No. 83-1145, Phase I, adopted May 31, 1985, and released June 12, 1985, the Allocation Plan, outlined in the Appendix B of this Order and subsequent orders related to presubscription oblications, will be available for inspection in the Public Reference Information Center at the Federal Communications Commission's Washington, D.C., location or may be obtained from the Commission's commercial contractor.

(A) Presubscription is the process by which end user customers may select and designate to the Telephone Company an IC to access, without an access code, for interLATA, interstate calls. This IC is referred to as the end user's presubscribed Interexchange Carrier (PIC).

(B) On the effective date of this tariff, all existing end users have access to interstate MTS/WATS. No later than 85 days prior to conversion to Feature Group D in a serving end office, the Telephone Company will notify end users of the availability of equal access in their particular area. The notification will include the names of all ICs wishing to participate in the presubscription process. This notification will be sent via U.S. Mail to each end user of record served by the end office to be converted.

(C) End users may select one of the following options at no charge:

- indicate a PIC or No-PIC for all of its lines,
- indicate a different PIC or No-PIC for each of its lines.

Only one PIC may be selected for each line or lines terminating in the same hunt group.

End users may designate that they do not want to presubscribe to any IC (No-PIC). The end user must arrange this designation by directly notifying the Telephone Company's business office. This choice will require the end user to dial an access code (10XXX or 101XXXX) for all interLATA calls.

After the end user's initial selection of a PIC or the designation that they do not want to presubscribe to any IC (No-PIC), for any change in selection after conversion to Equal Access in the serving end office, a nonrecurring charge, as set forth in Section 17 following applies.

13. Additional Engineering, Additional Labor and Miscellaneous Services (Cont'd)

13.4 Presubscription (Cont'd)

(D) End users not responding to the initial notification will be sent a second notification for the selection of a PIC no earlier than 40 days prior to or no later than 90 days after the conversion to Equal Access in a serving end office. This second notification will indicate the default option of No-PIC will be assigned to them if they fail to respond to the second notification.

End users assigned to a No-PIC by default may change their No-PIC one time within six months after conversion to Equal Access in the serving end office at no charge.

Following the six month period after conversion to Equal Access for any change in selection, a nonrecurring charge as set forth in Section 17 following, applies.

(E) When an end user indicates more than one IC selection on the return notification or returns an illegible return notification, the Telephone Company will contact the end user for clarification. If the end user indicates an IC selection on the return notification that does not match with information provided by an IC and both notifications indicate the same authorization date, the end user's notification takes precedence and the Telephone Company will process the end user's selection. In the event that two or more ICs provide to the Telephone Company notifications with the same authorization date and neither notification has been processed, the Telephone Company will contact the end user for clarification. A list of these end users in conflict must be sent to the affected IC by the Telephone Company.

In the event that two or more ICs have provided to the Telephone Company notifications with the same authorization date(s), and one IC notification has already been processed by the Telephone Company, those IC notifications not yet processed would be returned to the ICs.

13. Additional Engineering, Additional Labor and Miscellaneous Services (Cont'd)

13.4 Presubscription (Cont'd)

(F) New end users who are served by end offices equipped with Feature Group D will be asked to select a PIC or No-PIC at the time they place an order with the Telephone Company for Telephone Exchange Service. They may select either of the following options. There will be no charge for this initial selection.

- designate a PIC or No-PIC for all of its lines,
- designate a different PIC or No-PIC for each of its lines.

Only one PIC or No-PIC may be selected for each individual line, or lines terminating in the same hunt group. End users that select No-PIC must arrange this designation by directly notifying the Telephone Company business office. Subsequent to the installation of Telephone Exchange Service and after the end user's initial selection of a PIC or No-PIC, for any change in selection, a nonrecurring charge, as set forth in Section 17 following, applies.

(G) If the new end user fails to make a PIC or No-PIC selection prior to the date of installation of Telephone Exchange Service, the Telephone Company will (1) default the customer's line to No-PIC which will require the end user to dial an access code (101XXXX) for all interLATA calls, or (2) block the end user from interLATA calling if unable to default the customer's line to No-PIC. The end user will be notified which option will be applied if they fail to make a PIC or No-PIC selection. The customer will be allowed to select a PIC one time at no charge within six months from installation of Telephone Exchange Service.

For any change in selection after 6 months from the installation of Telephone Exchange Service, a nonrecurring charge, as set forth in Section 17 following applies.

13. Additional Engineering, Additional Labor and Miscellaneous Services (Cont'd)

13.4 Presubscription (Cont'd)

(H) If an IC elects to discontinue its Feature Group D service offering prior to or within 2 years of the conversion, the IC will notify the Telephone Company of the cancellation. The IC will also notify all end users which selected them that they are canceling their service and that they should contact the Telephone Company to select a new primary IC. The IC will also inform the end user that it will pay the PIC change charge. The canceling IC will then be billed by the Telephone Company the nonrecurring charge set forth in Section 13.4(J), following, for each end user for a period of two years from the discontinuance of Feature Group D service.

(I) If an IC elects to change or discontinue use of a Carrier Identification Code (CIC) for any reasons other than those set forth in (H) above, the IC will identify to the Telephone Company any affected end users and advise the Telephone Company of the new CIC to be assigned to these end users. If the CIC change involves a change of carrier for any end users, the IC will notify the affected end users of the change. The Telephone Company will change the PIC of each end user identified by the IC to the new CIC and bill the IC the nonrecurring charge set forth in Section 13.4(J) following for each end user line or trunk that is changed.

(J) As specified above, a nonrecurring charge will apply for subsequent changes to the end user's selection of a PIC, including the establishment or removal of a PIC or no-PIC selection. The nonrecurring charge to process a PIC change request is bifurcated into four (4) separate nonrecurring charges and applies as follows:

(1) A nonrecurring charge, as set forth in Section 17, following, applies when the PIC change request is submitted to the Telephone Company through manual methods.
(2) A nonrecurring charge, as set forth in Section 17, following, applies when the PIC change request is submitted to the Telephone Company through electronic methods.
(3) A nonrecurring charge, as set forth in Section 17.4.4(I)(3), following, applies to the PIC change when a request submitted to the Telephone Company through manual methods requests a simultaneous change to both the interLATA PIC and intraLATA PIC selections.
(4) A nonrecurring charge, as set forth in Section 17.4.4(I)(4), following, applies to the PIC change when a request submitted to the Telephone Company through electronic methods requests a simultaneous change to both the interLATA PIC and intraLATA PIC selections.

As used above, manual methods are (i) all personal interaction between an end user, or a person acting on behalf of the end user, and a Telephone Company employee and (ii) any facsimile or written submissions from an end user, or a person acting on behalf of the end user, to a Telephone Company service center. Electronic methods shall include all other methods. If a PIC change request utilizing an electronic method results in manual processing, the electronic nonrecurring charge shall apply upon completion of the request.

13. Additional Engineering, Additional Labor and Miscellaneous Services (Cont'd)

13.5 Reserved For Future Use

13.6 Unauthorized Predignated Interexchange Carrier (PIC) Change

For the purpose of this section, a subscriber is defined as:

- the party identified in the account records of the Telephone Company as responsible for payment of the telephone bill, or
- any adult person authorized by such party to change telecommunications services or to charge services to the account, or
- any person contractually or otherwise lawfully authorized to represent such party.

If an IC requests a PIC change on behalf of a subscriber and the subscriber subsequently denies requesting the change; the Telephone Company will:

- Notify both carriers involved in the unauthorized change allegation made by the subscriber. This notification must include the identity of both carriers.
- Direct the subscriber to the appropriate state regulatory agency or the Federal Communications Commission to file a complaint.
- Inform the subscriber that if he or she has not already paid charges to the unauthorized carrier, he or she is not required to pay for any charges incurred for the first 30 days after the unauthorized change.

13.7 Blocking Service

13.7.1 International Blocking Service

The Telephone Company will provide International Blocking Service to customers who obtain local exchange service from the Telephone Company under its general or local exchange tariffs and to customers who obtain Feature Group A Switched Access service under this tariff. This service is only provided at appropriately equipped Telephone Company end offices. Those offices providing International Blocking Service are identified in National Exchange Carrier Association, Inc. Tariff F.C.C. No. 4.

On each line or trunk for which International Blocking Service is ordered, the Telephone Company will block all direct dialed international calls that use the call sequence of 011+ or 10XXX-011+ or 101XXXX-011+. When capable, the Telephone Company will route the blocked calls to a recorded message.

An International Blocking Service charge as set forth in Section 17 following is applicable for each new or existing exchange line or trunk or Feature Group A Switched Access line to which International Blocking Service is added or removed. This charge does not apply when blocking is removed from an exchange line or trunk or Feature Group A Switched Access line at the same time that it is disconnected. Also, a service charge will not apply when the customer initiates international toll block in an effort to deter fraudulent activity.

13. Additional Engineering, Additional Labor and Miscellaneous Services (Cont'd)

13.7 Blocking Service (Cont'd)

13.7.1 International Blocking Service (Cont'd)

A Miscellaneous Service Order Charge as set forth in Section 17 will apply to orders adding or removing International Blocking Service that are placed subsequent to the initial installation of the associated exchange line(s) or trunk(s) or Feature Group A Switched Access line(s). This charge does not apply when blocking is removed from an exchange line or trunk or Feature Group A Switched Access line at the same time that it is disconnected.

13.7.2 900 Blocking Service

The Telephone Company will provide 900 Blocking Service to customers who obtain local exchange service from the Telephone Company under its general or local exchange tariffs and to customers who obtain Feature Group A Switched Access service under this tariff. This service is only provided at appropriately equipped end offices. Those offices providing 900 Blocking Service are identified in National Exchange Carrier Association, Inc. Tariff F.C.C. No. 4.

On each line or trunk for which 900 Blocking Service is ordered, the Telephone Company will block all direct dialed calls placed to a 900 number. When capable, the Telephone Company will route the blocked calls to a recorded message.

A Blocking Service charge as set forth in Section 17 following is applicable when ordered by the end user customer with the following exception:

- Blocking access to 900 Service is offered to all subscribers at no charge at the time telephone service is established at a new number and for 60 days thereafter.

The Blocking Service charge is applied for each line, trunk or Feature Group A Switched Access service to which 900 Blocking Service is added or removed. Requests by subscribers to remove 900 Blocking Service must be in writing. This charge does not apply when blocking is removed from an exchange line or trunk or Feature Group A Switched Access line at the same time that it is disconnected.

13. Additional Engineering, Additional Labor and Miscellaneous Services (Cont'd)

13.8 Billing Name and Address Service

13.8.1 General Description

(A) Billing Name and Address (BNA) Service is the provision by the Telephone Company to an interstate service provider who is a customer of the Telephone Company of the complete billing name, street address, city or town, state and zip code for a telephone number or calling card account number assigned by the Telephone Company. An interstate service provider is defined as an interexchange carrier, an operator service provider, an enhanced service provider or any other provider of interstate telecommunications services.

(B) BNA Service is provided only for the purposes of allowing customers to bill their end users for telephone services provided by the customer, order entry and customer service information, fraud prevention identification of end users who have moved to a new address, any purpose associated with equal access requirement, and information associated with Local Exchange Carrier (LEC) calling calls card calls, collect and third party calls.

BNA information may not be resold or used for any other purpose including, but not limited to, marketing or merchandising activities.

(C) BNA information associated with listed/published telephone numbers will be provided. Requests for BNA information associated with nonpublished and unlisted telephone numbers will be provided, unless (1) the subscriber to a nonpublished or unlisted telephone number has affirmatively that requested its BNA not be disclosed, or (2) in the case of Puerto Rico Telephone Company's subscribers to nonpublished or unlisted numbers, BNA will be provided only if affirmative authorization has been obtained from such subscribers.

13.8.2 Undertaking of the Telephone Company

(A) A standard format for the receipt of BNA requests and the provision of BNA information will be established by the Telephone Company.

(B) Standard response to BNA requests will be by First Class Mail. Standard format will be on paper. Optional Magnetic Tape formatting will be offered where available.

(C) Where facilities are available, the customer may request an optional specialized output format required to meet a specific customer need.

13. Additional Engineering, Additional Labor and Miscellaneous Services (Cont'd)

13.8 Billing Name and Address Service (Cont'd)

13.8.2 Undertaking of the Telephone Company (Cont'd)

(D) The Telephone Company will make every effort to provide accurate and complete BNA data. The Telephone Company makes no warranties, expressed or implied, as to the accuracy or completeness of this information.

(E) The Telephone Company will not disclose BNA information to parties other than interstate service providers and their authorized billing agents as defined in 13.8.1(A) preceding. BNA disclosure is limited to those purposes as defined in 13.8.1(B) preceding.

(F) The Telephone Company reserves the right to request from an interstate service provider who has placed an order for BNA service, the source data upon which the interexchange carrier has based the order. This request is made to ensure that the BNA information is to be used only for purposes as described in 13.8.1(B) preceding. The Telephone Company will not process the order until such time as the interstate service provider supplies the requested data.

13.8.3 Obligations of the Customer

(A) The customer shall order BNA Service on a separate BNA Order. The order must identify both the customer's authorized representative and the address to which the information is to be sent.

(B) The customer shall treat all BNA information as confidential. The customer shall insure that BNA information is used only for the purposes as described in 13.8.1(B) preceding.

(C) The customer shall not publicize or represent to others that the Telephone Company jointly participates with the customer in the development of the customer's end user records it assembles through the use of BNA Service.

(D) Upon request, the customer will provide to the Telephone Company the source data upon which the customer has based an order for BNA service. The Telephone Company will not process the order until such time as the customer provides the requested data.

13. Additional Engineering, Additional Labor and Miscellaneous Services (Cont'd)

13.8 Billing Name and Address Service (Cont'd)

13.8.4 Rate Regulations

(A) For each order for BNA information received by the Telephone Company, a BNA Order Charge applies. In addition, a charge applies for each customer specific record provided. The BNA Order Charge and the Per Record Charge are specified in Section 17 following.

(B) Where available, the customer may order the response formatted on Magnetic Tape. The Optional Magnetic Tape Charge is specified in Section 17 following and is in addition to the BNA Order Charge and the BNA Record Charge.

(C) Where available, the customer may order an output format other than a standard paper format in order to meet a customer's specific requirement. This option is subject to an hourly programming charge as specified in Section 17 following and is in addition to the BNA Order Charge and the BNA Record Charge.

13.9 Originating Line Screening (OLS) Service

The Telephone Company will provide OLS Service to aggregators and other customers who obtain local exchange service from the Telephone Company under its general or local exchange tariff. OLS service enables customers to determine whether there are billing restrictions on exchange service lines from which a call originates. OLS service delivers codes on operator assisted calls made from aggregator locations to identify, calls originating from privately owned payphones, inmate locations, and hotels/motels, etc.

OLS Service is provided at no charge when ordered with the installation of new local exchange service. However, when an OLS code is added to an existing exchange service line, a charge is applied as set forth in Section 17. This charge is applied for each exchange service line to which an OLS code is assigned. The customer must specify the number of exchange service lines and each individual telephone number equipped.

A Miscellaneous Service Order Charge as set forth in Section 17 will apply to orders adding OLS codes that are placed subsequent to the initial installation of the associated exchange service line. This charge does not apply when OLS codes are removed from an exchange service line at the same time that the exchange service line is disconnected.

13. Additional Engineering, Additional Labor and Miscellaneous Services (Cont'd)

13.9 Originating Line Screening (OLS) Service (Cont'd)

OLS codes may be delivered using Line Information Database (LIDB) or Flexible Automatic Number Identification (Flex ANI) technology. Those telephone companies delivering OLS codes using LIDB are identified in National Exchange Carrier Association, Inc. Tariff F.C.C. No. 4, as are those companies delivering OLS codes using Flex ANI.

13.10 Nonchargeable Confirmation Services

13.10.1 Billed Number Screening (BNS)

At the request of the customer, the Telephone Company business office will confirm BNS codes associated with a line to which a call is to be billed.

13.10.2 Originating Line Screening (OLS)

At the request of the customer, the Telephone Company business office will confirm OLS codes associated with an exchange service line from which a call originates.

13.11 Coin Supervision Additive Service

The Telephone Company will provide Coin Supervision Additive Service to Payphone Service Providers (PSPs) who order local exchange service lines for the provision of pay telephone service and where the pay telephone equipment connected to the local exchange service lines requires central office coin supervision capability. The local exchange service lines used for the provision of pay telephone service are obtained from and subject to the terms and conditions under the Telephone Company's general and/or local tariffs.

Coin Supervision Additive Service provides the capability of central office line equipment to pass signals and/or tones from an exchange service line to a trunk terminating at the PSP's operator service provider. These signals enable an operator service provider to recognize coin deposits and return coins to the pay telephone user. Coin Supervision Additive Service also permits a suitably equipped operator service provider to automatically ring back the originating exchange service line upon completion of the call.

A Coin Supervision Additive Service charge as set forth in Section 17 following is assessed monthly to the PSP for each exchange service line for which Coin Supervision Additive Service is provided.

13. Additional Engineering, Additional Labor and Miscellaneous Services (Cont'd)

13.12 Payphone-Specific Coding Digits Service

The Telephone Company will equip local exchange pay telephone lines ordered by Payphone Service Providers (PSPs) from the Telephone Company's local exchange tariff with the capability to transmit payphone-specific coding digits (i.e., 27 for pay telephones requiring central office coin supervision, 29 for prison/inmate pay telephones, and 70 for pay telephones not requiring central office coin supervision) to the Interexchange Carrier. These digits will be transmitted via Flexible Automatic Number Identification (Flex ANI) to the Interexchange Carriers who have trunks equipped with the Flex ANI optional feature as described in Section 6 preceding. The Interexchange Carriers will use this information to compensate the PSP's for subscriber 800 series calls and dial-around access code call (e.g., 101XXXX) placed from pay telephones.

The Telephone Company will apply a monthly Payphone-Specific Coding Digits Service charge, as set forth in Section 17 following, to each pay telephone service line that is assigned a payphone-specific coding digit. This charge recovers the initial costs of deploying the Flex ANI capability and will be in effect for the period of September 12, 1998 to September 11, 2001.

13.13 Unattended Group Teleconference Service

Unattended Group Teleconference Service allows a customer to subscribe to Telephone Company conferencing ports for use in teleconferencing services. The customer sells the teleconferencing services to participants who dial a predetermined telephone number and are automatically joined in a "meet me" group teleconference call with other participants dialing the same telephone number. This service does not require a pass-code or intervention by an Operator. The maximum number of ports is determined by the number of ports subscribed to by the customer, on a one for one basis.

The Telephone Company will provide a Central Office telephone number assignment and a specified number of "meet me" group conference ports to the customer. Unattended Group Teleconference Service is only offered in DMS 100 equipped exchanges and where facilities and conditions permit. The capacity of the Telephone Company's teleconference facilities is limited and the demand for use of such facilities may from time to time exceed the quantity available for use.

Rates and charges for Unattended Group Teleconference Service are as set forth in Section 17, following. The Miscellaneous Service Order Charge as set forth in Section 17, following will apply for the initial service order and for each subsequent change to the customer's initial service request.

13. Additional Engineering, Additional Labor and Miscellaneous Services (Cont'd)

13.14 Reserved For Future Use

13.15 Local Number Portability Query Service

(A) General

LNP provides the capability that allows a customer to maintain the same Directory Number (DN) when changing from one local telecommunications service provider to another, while remaining at the same location. In addition, it allows other Telephone Company customers to complete calls to numbers that have been ported.

LNP Query Service utilizes Location Routing Number (LRN) architecture to query a data base to secure network routing instructions prior to completion of a call. For NXXs equipped with LNP capability, the data base will contain information identifying an end user's selected Local Service Provider (LSP), along with the appropriate LRN for the LSP's switch. The LRN will be used to direct the call to the correct switch for completion to the end user. When more than one network is involved in completing the call, the network immediately preceding the terminating network (i.e., the N-1 Network) is responsible for querying the LNP data base to secure the LRN used in routing the call.

13. Additional Engineering, Additional Labor and Miscellaneous Services (Cont'd)

13.15 Local Number Portability (LNP) Query Service (Cont'd)

(B) Service Provisioning

(1) Manner of Provisioning

LNP Query Service will be provisioned using the LRN architecture. The LRN associates an NPA-NXX-XXXX network routing number with each central office switch that serves ported lines. This number will be known as the LRN for that switch. The LRN will be used as a network routing number for calls to ported numbers served by that switch. All switching equipment types will utilize the LRN architecture to provide LNP call processing.

(2) Limitations

LNP Query Service is to be used only on a call-by-call basis for routing calls to number portable NXX codes and cannot be used for purposes other than those functions described herein.

Information residing in the Telephone Company's LNP data base is protected from unauthorized access and may not be stored in a carrier's data base or elsewhere for any reason.

13. Additional Engineering, Additional Labor and Miscellaneous Services (Cont'd)

13.15 Local Number Portability (LNP) Query Service (Cont'd)

(B) Service Provisioning (Cont'd)

(3) Network Management

The Telephone Company will administer its network to ensure the provision of acceptable service levels to all users of the LNP Query Service.

The Telephone Company reserves the right to block any LNP Query traffic in a nondiscriminatory manner, where the processing of the LNP queries threatens to disrupt operation of its network and impair network reliability.

(C) LNP Query Service Application

The applications of the LNP network capability available through the Telephone Company's network are:

(1) Prearranged LNP Query

N-1 carriers may arrange in advance to have the Telephone Company query the LNP data base to route a call properly to the terminating carrier serving the ported number. This query is initiated on behalf of the N-1 carrier in the performance of its N-1 responsibility.

- If the Telephone Company's end office is the first point of switching for terminating a non-queried call and the telephone number is a ported number, the end office switch will suspend the call process and launch a query to the LNP data base. Once the routing information is returned to the end office, call processing will be resumed and the call will be routed to the correct switch for completion.

- In situations where the Telephone Company's tandem is the first point of switching for terminating a non-queried call, the tandem switch will suspend the call process and launch a query to the LNP data base. Once the routing information is returned to the tandem switch, call processing will be resumed and the call will be routed to the correct switch for completion.

The carrier will be assessed an end office or tandem Prearranged LNP Query charge, as set forth in 17.6.11 following, regardless of the outcome of the query.

13. Additional Engineering, Additional Labor and Miscellaneous Service2 (Cont'd)

13.15 Local Number Portability (LNP) Query Service (Cont'd)

(C) LNP Query Service Application (Cont'd)

(2) Default LNP Query

N-1 carriers who do not prearrange with the Telephone Company to query the LNP data base and terminate calls into the Telephone Company's network without having performed the appropriate data base query will be assessed an end office or tandem Default LNP Query charge. This query is initiated on behalf of the N-1 carrier in the performance of its N-1 responsibility, and may require the Telephone Company to assume extraordinary measures to meet the demand of the unforecasted default queries.

- If the Telephone Company's end office is the first point of switching for terminating a non-queried call and the telephone number is a ported number, the end office switch will suspend the call process and launch a query to the LNP data base. Once the routing information is returned to the end office, call processing will be resumed and the call will be routed to the correct switch for completion.

- In situations where the Telephone Company's tandem is the first point of switching for terminating a non-queried call, the tandem switch will suspend the call process and launch a query to the LNP data base. Once the routing information is returned to the tandem switch, call processing will be resumed and the call will be routed to the correct switch for completion.

The Default LNP Query charge, as set forth in 17.6.11 following, will apply, regardless of the outcome of the query.

(D) Rate Regulations

The rates and charges associated with LNP Query Service are query based and will be billed on a monthly basis, based on recorded usage. Query charges will be applied by the Telephone Company based upon the recordings of carrier queries to the data base. The Telephone Company will develop monthly charges based on an average number of queries per month if recordings are not available.

Specific rates and charges are set forth in 17.6.11 following.

14. Special Construction

14.1 Application of Tariff

This tariff contains regulations, rates, charges, and liabilities applicable for the special construction of interstate facilities provided by the Issuing, Concurring, Connecting or Other Participating Carriers of this tariff, hereinafter referred to as the Telephone Company.

When special construction of facilities is required, the provisions of this tariff apply in addition to all regulations, rates, and charges set forth in the appropriate service tariff.

14.2 Regulations

14.2.1 Filing of Charges

Rates, charges and liabilities for special construction to provide facilities for use for one month or more are filed in 14.3 following, as appropriate.

Rates, charges and liabilities for the construction of facilities for use for less than one month are filed in supplements to this tariff.

14.2.2 Ownership of Facilities

The Telephone Company providing specially constructed facilities under the provisions of this tariff retains ownership of all such facilities.

14.2.3 Interval to Provide Facilities

Based on available information and type of service ordered, the Telephone Company will establish a completion date for the specially constructed facilities. If the scheduled completion date cannot be met due to circumstances beyond the control of the Telephone Company, a new completion date will be established and the customer will be notified.

14.2.4 Special Construction Involving Both Interstate and Intrastate Facilities

When special construction involves facilities to be used to provide both interstate and intrastate services, charges for the portion of the construction used to provide intrastate service shall be in accordance with the appropriate intrastate tariff.

14. Special Construction (Cont'd)

14.2 Regulations (Cont'd)

14.2.5 Payments for Special Construction

(A) Payment of Charges

All bills associated with special construction are due in accordance with the regulations in the appropriate service tariff.

(B) Start/End of Billing

Billing of recurring charges for specially constructed facilities starts on the day after the facilities are made available for use. Billing accrues through and includes the day that the specially constructed facilities are discontinued.

(C) Credit Allowance for Service Interruption

In the event of a service interruption involving specially constructed facility, the customer shall receive a recurring monthly charge credit in accordance with the credit allowance provisions in the appropriate service tariff associated with the affected services.

When an interruption continues due to the failure of the customer to authorize the replacement of facilities subject to a Replacement Charge, as specified in 14.2.6 following, the credit allowance will be terminated on the seventh calendar day after the Telephone Company has provided the customer with written notification of the need for replacement. The credit allowance will resume on the day after the Telephone Company receives written authorization for the replacement from the customer.

14. Special Construction (Cont'd)

14.2 Regulations (Cont'd)

14.2.6 Liabilities and Charges for Special Construction

(A) General

This section describes the various charges and liabilities that may apply when the Telephone Company provides special construction of facilities in accordance with an order for service. Written approval of all liabilities and charges must be provided to the Telephone Company prior to the start of construction.

(B) Conditions Requiring Special Construction

Special construction is required when 1) facilities are not available to meet an order for service, and 2) the Telephone Company constructs facilities, and 3) one or more of the following conditions exist:

- The Telephone Company has no other requirement for the facilities requested.
- It is requested that service be furnished using a type of facility, or via a route, other than that which the Telephone Company would normally utilize in furnishing the requested service.
- More facilities are requested than would normally be required to satisfy an order.
- It is requested that construction be expedited, resulting in added cost to the Telephone Company.

(C) Development of Liabilities and Charges

Special construction charges and liabilities will be developed based on estimated cost, except when actual costs are requested in writing prior to the start of special construction.

(D) Types of Liabilities and Charges

Depending on the specifics associated with each individual case, one or more of the following special construction charges and/or liabilities may be applicable:

(1) Nonrecurring Charge

A nonrecurring charge always applies and includes one or more of the following components:

14. Special Construction (Cont'd)

14.2 Regulations (Cont'd)

14.2.6 Liabilities and Charges for Special Construction (Cont'd)

(D) Types of Liabilities and Charges (Cont'd)

(1) Nonrecurring Charge (Cont'd)

- Case Preparation Charge

A nonrecurring charge always includes a case preparation charge component to cover the administrative expenses associated with preparing a special construction case and the associated tariff filing.

- Expediting Charge

A nonrecurring charge may include an expediting charge when it is requested that special construction be completed on an expedited basis. The charge equals the difference in estimated cost between expedited and nonexpedited construction.

- Optional Payment

An optional payment charge may be included in the nonrecurring charge in association with a type of facility or route other than that which the Telephone Company would normally use in furnishing the requested service if lower recurring monthly charges are desired for the specially constructed facilities. This charge is equal to the excess installed cost or the total nonrecoverable cost, whichever is less. This election must be made in writing before special construction starts. If this election is coupled with the actual cost option, the optional payment charge will reflect the actual cost of the specially constructed facilities.

- Replacement Charge

If any portion of specially constructed facilities for which an optional payment charge has been paid requires replacement involving capital investment, a replacement charge will apply. This charge will be in the same ratio to the total replacement costs as the initial optional payment charge was to the installed cost of the original specially constructed facilities. If any portion of the facilities subject to the replacement charge fails, service will not be restored until notification is provided in writing that replacement is required and such replacement is ordered.

14. Special Construction (Cont'd)

14.2 Regulations (Cont'd)

14.2.6. Liabilities and Charges for Special Construction (Cont'd)

(D) Types of Liabilities and Charges (Cont'd)

(1) Nonrecurring Charge (Cont'd)

- Rearrangement Charge

If the Telephone Company is requested to rearrange existing specially constructed facilities, a nonrecurring charge equal to the cost of any special construction will apply.

- Special Construction of Facilities for Use for Less Than One Month

When the Telephone Company is requested to construct facilities to provide service for less than one month, a nonrecurring charge applies. In addition to the case preparation charge component, this nonrecurring charge recovers all elements of cost, including engineering, shipping of equipment, equipment installation, line-up, equipment leasing, space rental, equipment removal, and any other costs associated with the construction of the facilities.

(2) Maximum Termination Liability and Termination Charge

A Maximum Termination Liability is equal to the nonrecoverable costs associated with specially constructed facilities and is the maximum amount which could be applied as a Termination Charge if all specially constructed facilities were discontinued before the Maximum Termination Liability expires.

The liability period is equal to the average life of the account associated with the specially constructed facilities. The liability period is generally expressed in terms of an effective and expiration date.

The Maximum Termination Liability is filed with the initial tariff filing in decreasing amounts at ten-year intervals over the average life of the facilities. In the event that the average account life of the facilities is not an even multiple of ten, the last increment will reflect the appropriate number of years remaining.

Example Illustrating a 27-Year Average Account Life

Maximum Termination Liability	Effective Date	Expiration Date
$10,000	6/1/84	6/1/94
7,000	6/1/94	6/1/04
3,000	6/1/04	6/1/11

14. Special Construction (Cont'd)

14.2 Regulations (Cont'd)

14.2.6 Liabilities and Charges for Special Construction (Cont'd)

(D) Types of Liabilities and Charges (Cont'd)

(2) Maximum Termination Liability and Termination Charge (Cont'd)

Prior to the expiration of each liability period, the customer has the option to (A) terminate the special construction case and pay the appropriate charges, or (B) extend the use of the specially constructed facilities for the new liability period.

The Telephone Company will notify the customer six months in advance of the expiration date of each ten-year liability period. The customer must provide the Telephone Company with written notification at least 30 days prior to the expiration of the liability period if termination is elected. Failure to do so will result in an automatic extension of the special construction case to the next liability period at the filed Maximum Termination Liability amount.

A Termination Charge may apply when all services using specially constructed facilities which have a tariffed Maximum Termination Liability are discontinued prior to the expiration of the liability period. The charge reflects the unamortized portion of the nonrecoverable costs at the time of termination, adjusted for net salvage and possible reuse. Administrative costs associated with the specific case of special construction and any cost for restoring a location to its original condition are also included. A Termination Charge may never exceed the filed Maximum Termination Liability.

A partial termination of specially constructed facilities will be provided, at the election of the customer. The amount of the Termination Charge associated with such partial termination is determined by multiplying the Termination Charge which would result if all services using the specially constructed facilities were discontinued, at the time partial termination is elected, by the percentage of specially constructed facilities to be partially terminated. A tariff filing will be made following a partial termination to list remaining Maximum Termination Liability amounts and the number of specially constructed facilities the customer will remain liable for.

Example
A customer with a filed Maximum Termination Liability of $100,000 for 3600 specially constructed facilities requests a partial disconnection of 900 facilities. The Termination Charge for all facilities, at the time of the election, is $60,000. The partial termination charge, in this example, is $60,000 x 900/3600, or $15,000.

14. Special Construction (Cont'd)

14.2 Regulations (Cont'd)

14.2.6 Liabilities and Charges for Special Construction (Cont'd)

(D) Types of Liabilities and Charges (Cont'd)

(3) Annual Underutilization Liability and Underutilization Charge

Prior to the start of the special construction, the Telephone Company and the customer will agree on (1) the quantity of facilities to be provided, and (2) the length of the planning period during which the customer expects to place the facilities in service. The planning period is hereafter referred to as the Initial Liability Period (ILP). The ILP is listed in the tariff with an effective and expiration date.

Underutilization occurs only if, at the expiration date of the ILP and annually thereafter, less than 70 percent of the specially constructed facilities are in service at the filed tariff service rates.

An annual underutilization amount is filed on a per unit basis (e.g., per cable pair) for each case of special construction. This amount is equal to the annual per unit cost and includes depreciation, maintenance, administration, return, taxes and any other costs identified in the supporting documentation provided at the time the special construction case is filed.

Upon the expiration of the ILP, the number of underutilized facilities, if any, are multiplied by the annual underutilization liability amount. This product is then multiplied by the number of years (including any fraction thereof) in the ILP to determine the underutilization charge.

Annually thereafter, the number of underutilized facilities, if any, existing on the anniversary of the ILP expiration date will be multiplied by the annual underutilization liability amount to determine the underutilization charge for the preceding 12 month period.

14. Special Construction (Cont'd)

14.2 Regulations (Cont'd)

14.2.6 Liabilities and Charges for Special Construction (Cont'd)

(D) Types of Liabilities and Charges (Cont'd)

(3) Annual Underutilization Liability and Underutilization Charge (Cont'd)

Example

A customer orders 100 services and the special construction of 600 pair riser cable is agreed to, based on the customer's 5 year facility requirement. The ILP, in this example, would be filed for 5 years. The annual underutilization liability is filed at $2.00 per pair. If 400 pairs were in service at the end of the ILP, there would be an underutilization of 20 pairs, i.e., 420 (70% of 600) - 400= 20. The total underutilization charge for the first 5 years would be $200.00, or $2.00 per pair x 20 pairs x 5 years.

If 420 pairs are in service at the end of the 6th year, there would be no underutilization, i.e., 420 - 420 = 0.

(4) Recurring Monthly Charges

- Charge for Route or Type Other than Normal

When special construction is requested using a route or type of facility other than that which the Telephone Company would normally use, a recurring monthly charge, in addition to the monthly rates for service, is applicable. The charge is equal to the difference between the recurring costs of the specially constructed facilities and the recurring costs of the facilities the Telephone Company would have normally used.

(a) When an Optional Payment Charge as set forth in 14.2.6 (D) (1) preceding has been elected, the recurring monthly charge will be reduced to include specially constructed facility operating expense only.

(b) If the actual cost option as set forth in 14.2.6 (C) preceding has been elected, the recurring charge will be adjusted to reflect the actual cost of the new construction when the costs have been determined. This adjusted recurring charge is applicable from the start of service.

14. Special Construction (Cont'd)

14.2 Regulations (Cont'd)

14.2.6 Liabilities and Charges for Special Construction (Cont'd)

(D) Types of Liabilities and Charges (Cont'd)

(5) Lease Charge

This charge applies when the Telephone Company leases equipment in order to meet service requirements. The amount of the charge is equal to the net added cost to the Telephone Company caused by the lease.

(6) Cancellation Charge

If a service order with which special construction is associated is cancelled prior to the start of service, a cancellation charge will apply. The charge will include all nonrecoverable costs incurred by the Telephone Company in association with the special construction up to and including the time of cancellation.

14.2.7 Deferral of Start of Service

The Telephone Company may be requested to defer the start of service which will use the specially constructed facilities subject to the provisions set forth in the service tariff under which service is being provided. Requests for special construction deferral must be in writing and are subject to the following regulations:

(A) Construction Has Not Begun

If the Telephone Company has not incurred any installation costs before receiving a request for deferral, no charge applies.

(B) Construction Has Begun

If the construction of facilities has begun before the Telephone Company receives a request for deferral, charges will vary as follows:

(1) All Services Are Deferred

When all service which will use specially constructed facilities are deferred, a charge based on the costs incurred by the Telephone Company during each month of the deferral will apply. Those costs include the recurring costs for that portion of the facilities already completed and any other costs associated with the deferral. The cost of any components of the nonrecurring charge which have been completed at the time of the deferral will also apply.

14. Special Construction (Cont'd)

14.2 Regulations (Cont'd)

14.2.7 Deferral of Start of Service (Cont'd)

(B) Construction Has Begun (Cont'd)

(2) Some Services Are Deferred

When some services which will use the specially constructed facilities are deferred, the construction case will be completed and all special construction charges will apply.

(C) Construction Complete

If the construction of facilities has been completed before the Telephone Company receives a request for deferral, all special construction charges will apply.

14.2.8 Definitions

Actual Cost - The term "Actual Cost" denotes all costs charged against a specific case of special construction, including all appropriate taxes.

Annual Underutilization Liability - The term "Annual Underutilization Liability" denotes a unit amount which may be billed annually if fewer services are in use utilizing specially constructed facilities at filed tariff rates than were originally specially constructed.

Estimated Cost - The term "Estimated Cost" denotes all estimated costs that will be incurred in providing a specific case of special construction, including any appropriate taxes.

Facilities - The term "Facilities" denotes any cable, poles, conduits, microwave or carrier equipment, wire center distribution frames, central office switching equipment, etc., utilized to provide interstate services.

Initial Liability Period - The term "Initial Liability Period" denotes the initial planning period during which the customer expects to place specially constructed facilities in service.

Installed Cost - The term "Installed Cost" denotes the total investment (estimated or actual) required by the Telephone Company to provide specially constructed facilities.

14. Special Construction (Cont'd)

14.2 Regulations (Cont'd)

14.2.8 Definitions (Cont'd)

Maximum Termination Liability - The term "Maximum Termination Liability" denotes the maximum amount which may be billed if all services using specially constructed facilities are terminated prior to the expiration of the Maximum Termination Liability Period.

Maximum Termination Liability Period - The term "Maximum Termination Liability Period" denotes the length of time for which a termination charge may apply if all services using specially constructed facilities are terminated.

Net Salvage - The term "Net Salvage" denotes the estimated scrap, sale, or trade-in value, less the estimated cost of removal. Cost of removal includes the costs of demolishing, tearing down, or otherwise disposing of the material and any other applicable costs. Since the cost of removal may exceed salvage value, net salvage may be negative.

Nonrecoverable Cost - The term "Nonrecoverable Cost" denotes the cost of specially constructed facilities for which the Telephone Company has no foreseeable use should the service be terminated.

Normal Construction - The term "Normal Construction" denotes all facilities the Telephone Company would normally use to provide service in the absence of a requirement for special construction.

Normal Cost - The term "Normal Cost" denotes the estimated cost to provide services using normal construction.

Permanent Facilities - The term "Permanent Facilities" denotes facilites providing service for one month or more.

Recoverable Cost - The term "Recoverable Cost" denotes the cost of the specially constructed facilities for which the Telephone Company has a foreseeable reuse, either in place or elsewhere, should the service be terminated.

Termination Charge - The term "Termination Charge" denotes the portion of the Maximum Termination Liability that is applied as a nonrecurring charge when all services are discontinued prior to the expiration of the specified liability period.

14. Special Construction (Cont'd)

14.3 Special Construction Cases:

Case No.	Telephone Co./ Customer Name	Description	Charge/ Liability	Effective Date	Expiration
1.	CenturyTel of Washington, Inc./ Voicestream	Special construction of Entrance Facilities to customer location in North Bend, Wa for OC 48 installation	MTL $10,917	12/15/00	12/15/05 MTL reduction of $181.95 per Month

15. Access Service Interfaces and Transmission Specifications

15.1 contains Switched Access Service Options (which are comprised of Interface Groups, Supervisory Signaling, Entry Switch Receive Level and Local Transport Termination) and Transmission Specifications. 15.2 describes Special Access Service Network Channel (NC) codes and Network Channel Interface (NCI) codes.

15.1 Switched Access Service

Ten Interface Groups are provided for terminating the Local Transport Entrance Facility at the customer's designated premises. Each Interface Group provides a specified premises interface (e.g., two-wire, four-wire, DS1, etc.). Where transmission facilities permit, and at the option of the customer, the Entrance Facility may be provided with optional features as set forth in 15.1.1 following.

As a result of the customer's access order and the type of Telephone Company transport facilities serving the customer designated premises, the need for signaling conversions or two-wire to four- wire conversions, or the need to terminate digital or high frequency facilities in channel bank equipment may require that Telephone Company equipment be placed at the customer designated premises. For example, if a voice frequency interface is ordered by the customer and the Telephone Company facilities serving the customer designated premises are digital, then Telephone Company channel bank equipment must be placed at the customer designated premises in order to provide the voice frequency interface ordered by the customer.

15.1.1 Local Transport Interface Groups

Interface Groups are combinations of technical parameters which describe the Telephone Company handoff at the point of termination at the customer designated premises. The technical specifications concerning the available interface groups are set forth in (A) through (D) following.

15. Access Service Interfaces and Transmission Specifications (Cont'd)

15.1 Switched Access Service (Cont'd)

15.1.1 Local Transport Interface Groups (Cont'd)

Interface Group 1 is provided with Type C Transmission Specifications, as set forth in 15.1.2(C) following, and Interface Groups 2 through 10 are provided with Type A or B Transmission Specifications, as set forth respectively in 15.1.2(E) and (F) following, depending on the Feature Group and whether the Access Service is routed directly or through an access tandem. All Interface Groups are provided with Data Transmission Parameters.

Only certain premises interfaces are available at the customer designated premises. The premises interfaces associated with the Interface Groups may vary among Feature Groups.

(A) Interface Group 1

Interface Group 1, except as set forth in the following, provides two-wire voice frequency transmission at the point of termination at the customer designated premises. The interface is capable of transmission of voice and associated telephone signals within the frequency bandwidth of approximately 300 to 3000 Hz.

Interface Group 1 is not provided in association with FGC and FGD when the first point of switching is an access tandem. In addition, Interface Group 1 is not provided in association with FGB, FGC or FGD when the first point of switching provides only four-wire terminations.

15. Access Service Interfaces and Transmission Specifications (Cont'd)

15.1 Switched Access Service (Cont'd)

15.1.1 Local Transport Interface Groups (Cont'd)

(A) Interface Group 1 (Cont'd)

The transmission path between the point of termination at the customer designated premises and the customer's serving wire center may be comprised of any form or configuration of plant capable of and typically used in the telecommunications industry for the transmission of voice and associated telephone signals within the frequency bandwidth of 300 to 3000 Hz.

The interface is provided with loop supervisory signaling. When the interface is associated with FGA, such signaling will be loop start or ground start signaling. When the interface is associated with FGB, FGC or FGD, such signaling, except for two-way calling which is E&M signaling, will be reverse battery signaling.

(B) Interface Group 2

Interface Group 2 provides four-wire voice frequency transmission at the point of termination at the customer designated premises. The interface is capable of transmission of voice and associated telephone signals within the frequency bandwidth of approximately 300 to 3000 Hz.

The transmission path between the point of termination at the customer designated premises and the customer's serving wire center may be comprised of any form or configuration of plant capable of and typically used in the telecommunications industry for the transmission of voice and associated telephone signals within the frequency bandwidth of approximately 300 to 3000 Hz.

15. Access Service Interfaces and Transmission Specifications (Cont'd)

15.1 Switched Access Service (Cont'd)

15.1.1 Local Transport Interface Groups (Cont'd)

(B) Interface Group 2 (Cont'd)

The interface is provided with loop supervisory signaling. When the interface is associated with FGA, such signaling will be loop start or ground start signaling. When the interface is associated with FGB, FGC or FGD, such signaling, except for two-way calling which is E&M signaling, will be reverse battery signaling.

(C) Interface Groups 3 through 5

Interface Groups 3 through 5 provide analog transmission at the point of termination at the customer designated premises. The various interfaces are capable of transmitting electrical signals at the frequencies illustrated following, with the capability to channelize voice frequency transmission paths. Certain frequencies within the bandwidth of the Interface Groups are reserved for Telephone Company use, e.g., pilot and carrier group alarm tones. Before the first point of switching, the Telephone Company will provide multiplex equipment to derive the transmission paths of frequency bandwidth of approximately 300 to 3000 Hz.

The interfaces are provided with individual transmission path SF supervisory signaling.

Interface Group Identification No.	Transmission Frequency Bandwidth	Analog Hierarchy Level	Maximum No. of Channelized Voice Freq. Trans. Paths
3	60 - 108 kHz	Group	12
4	312 - 552 kHz	Supergroup	60
5	564 - 3084 kHz	Mastergroup	600

15. Access Service Interfaces and Transmission Specifications (Cont'd)

15.1 Switched Access Service (Cont'd)

15.1.1 Local Transport Interface Groups (Cont'd)

(D) Interface Groups 6 through 10

Interface Groups 6 through 10 provide digital transmission at the point of termination at the customer designated premises. The various interfaces are capable of transmitting electrical signals at the nominal bit rates illustrated following, with the capability to channelize voice frequency transmission paths. Before the first point of switching, when analog switching utilizing analog terminations is provided, the Telephone Company will provide multiplex and channel bank equipment to derive transmission paths of a frequency bandwidth of approximately 300 to 3000 Hz. When digital switching or analog switching with digital carrier terminations is provided, the Telephone Company will provide, a DS1 signal(s) in D3/D4 format.

The interfaces are provided with individual transmission path bit stream supervisory signaling.

Interface Group Identification No.	Nominal Bit Rate (Mbps)	Digital Hierarchy Level	Max. No. of Channelized Voice Freq. Trans. Paths
6	1.544	DS1	24
9	44.736	DS3	672

15. Access Service Interfaces and Transmission Specifications (Cont'd)

15.1 Switched Access Service (Cont'd)

15.1.1 Local Transport Interface Groups (Cont'd)

(E) Local Transport Optional Features

Where transmission facilities permit, the Telephone Company will, at the option of the customer, provide the following features in association with Local Transport. An Access Order Charge as specified in 17.4.1(A) following is applicable on a per order basis when nonchargeable optional features are added subsequent to the installation of service.

- Customer Specified Entry Switch Receive Level

  Customer Specified Entry Switch Receive Level allows the customer to specify the receive transmission level at the first point of switching. The range of transmission levels which may be specified is described in Technical Reference TR-NPL-000334. This feature is available with Interface Groups 2 through 10 for Feature Groups A and B.

- Customer Specification of Local Transport Termination

  Customer Specification of Local Transport Termination allows the customer to specify, for Feature Group B routed directly to an end office or access tandem, a four-wire termination of the Local Transport at the first point of switching in lieu of a Telephone Company selected two-wire termination. This option is available only when the Feature Group B arrangement is provided with Type B Transmission Specifications.

- Supervisory Signaling

  Supervisory Signaling allows the customer to order an optional supervisory signaling arrangement for each transmission path provided where the transmission parameters permit, and where signaling conversion is required by the customer to meet its signaling capability.

15. Access Service Interfaces and Transmission Specifications (Cont'd)

15.1 Switched Access Service (Cont'd)

15.1.1 Local Transport Interface Groups (Cont'd)

(E) Local Transport Optional Features (Cont'd)

The Interface Groups, as described in (A) through (D) preceding, represent industry standard arrangements. Where transmission parameters permit, the customer may select the following optional signaling arrangements in place of the signaling arrangements standardly associated with the Interface Groups.

- For Interface Groups 1 and 2 associated with FGB, FGC or FGD

  DX Supervisory Signaling,
  E&M Type I Supervisory Signaling,
  E&M Type II Supervisory Signaling, or
  E&M Type III Supervisory Signaling

- For Interface Group 2 associated with FGB, FGC or FGD and in addition to the preceding

  SF Supervisory Signaling, or
  Tandem Supervisory Signaling

- For Interface Groups 3 through 5

  Optional Supervisory Signaling Not Available

- For Interface Groups 6 through 10

  These Interface Groups may, at the option of the customer, be provided with individual transmission path SF supervisory signaling where such signaling is available in Telephone Company central offices. Generally such signaling is available only where the first point of switching provides an analog (i.e., non-digital) interface to the transport termination.

  These optional Supervisory Signaling arrangements not available in combination with the SS7 optional feature as described in 6.8.2(C)(2) preceeding.

  Additionally, in (F) following, there is a matrix of available Premises Interface Codes as a function of Interface Group, Telephone Company Switch Supervisory Signaling and Feature Group.

15. Access Service Interfaces and Transmission Specifications (Cont'd)

15.1 Switched Access Service (Cont'd)

15.1.1 Local Transport Interface Groups (Cont'd)

(F) Available Premises Interface Codes

Following is a matrix showing premises interface codes which are available for each Interface Group. Their availability is a function of the Telephone Company switch supervisory signaling and Feature Group. For explanations of these codes, see the Parameter Codes and Options as set forth in 15.2.2(A) following.

Interface Group	Telephone Company Switch Supervisory Signaling	Premises Interface Code	Feature Group A	B	C	D
1	LO	2LS2	X			
	LO	2LS3	X			
	GO	2GS2	X			
	GO	2GS3	X			
	LO, GO	2DX3	X			
	LO, GO	4EA3-E	X			
	LO, GO	4EA3-M	X			
	LO, GO	6EB3-E	X			
	LO, GO	6EB3-M	X			
	RV, EA, EB, EC	2DX3		X	X	X
	RV, EA, EB, EC	4EA3-E		X	X	X
	RV, EA, EB, EC	4EA3-M		X	X	X
	RV, EA, EB, EC	6EB3-E		X	X	X
	RV, EA, EB, EC	6EB3-M		X	X	X
	EA, EB, EC	6EC3			X	X
	RV	2RV3-0			X	X
	RV	2RV3-T		X	X	X
	SS7	2NO2			X	X
2	LO, GO	4SF2	X			
	LO, GO	4SF3	X			
	LO	4LS2	X			
	LO	4LS3	X			
	LO	6LS2	X			

15. Access Service Interfaces and Transmission Specifications (Cont'd)

15.1 Switched Access Service (Cont'd)

15.1.1 Local Transport Interface Groups (Cont'd)

(F) Available Premises Interface Codes (Cont'd)

Interface Group	Telephone Company Switch Supervisory Signaling	Premises Interface Code	Feature Group A	B	C	D
2 (Cont'd)	GO	4GS2	X			
	GO	4GS3	X			
	GO	6GS2	X			
	LO, GO	4DX2	X			
	LO, GO	4DX3	X			
	LO, GO	6EA2-E	X			
	LO, GO	6EA2-M	X			
	LO, GO	8EB2-E	X			
	LO, GO	8EB2-M	X			
	LO, GO	6EX2-B	X			
	RV, EA, EB, EC	4SF2		X	X	X
	RV, EA, EB, EC	4SF3		X		
	RV, EA, EB, EC	4DX2		X	X	X
	RV, EA, EB, EC	4DX3		X		
	RV, EA, EB, EC	6DX2			X	
	RV, EA, EB, EC	6EA2-E		X	X	X
	RV, EA, EB, EC	6EA2-M		X	X	X
	RV, EA, EB, EC	8EB2-E		X	X	X
	RV, EA, EB, EC	8EB2-M		X	X	X
	EA, EB, EC	8EC2-M			X	X
	RV	4RV2-O		X	X	X
	RV	4RV2-T		X	X	X
	RV	4RV3-O			X	X
	RV	4RV3-T		X	X	
	SS7	4NO2			X	X
3	LO, GO	4AH5-B	X			
	RV, EA, EB, EC	4AH5-B		X	X	X
	SS7	4AH5-B			X	X
4	LO, GO	4AH6-C	X			
	RV, EA, EB, EC	4AH6-C		X	X	X
	SS7	4AH6-C			X	X
5	LO, GO	4AH6-D	X			
	RV, EA, EB, EC	4AH6-D		X	X	X
	SS7	4AH6-D			X	X

15. Access Service Interfaces and Transmission Specifications (Cont'd)

15.1 Switched Access Service (Cont'd)

15.1.1 Local Transport Interface Groups (Cont'd)

(F) Available Premises Interface Codes (Cont'd)

Interface Group	Telephone Company Switch Supervisory Signaling	Premises Interface Code	Feature Group A	B	C	D
6	LO, GO	4DS9-15	X			
	LO, GO	4DS9-15L	X			
	RV, EA, EB, EC	4DS9-15		X	X	X
	RV, EA, EB, EC	4DS9-15L		X	X	X
	SS7	4DS9-15			X	X
7	LO, GO	4DS9-31	X			
	LO, GO	4DS9-31L	X			
	RV, EA, EB, EC	4DS9-31		X	X	X
	RV, EA, EB, EC	4DS9-31L		X	X	X
	SS7	4DS9-31			X	X
8	LO, GO	4DS0-63	X			
	LO, GO	4DS0-63L	X			
	RV, EA, EB, EC	4DS0-63		X	X	X
	RV, EA, EB, EC	4DS0-63L		X	X	X
	SS7	4DS0-63			X	X
9	LO, GO	4DS6-44	X			
	LO, GO	4DS6-44L	X			
	RV, EA, EB, EC	4DS6-44		X	X	X
	RV, EA, EB, EC	4DS6-44L		X	X	X
	SS7	4DS6-44			X	X
10	LO, GO	4DS6-27	X			
	LO, GO	4DS6-27L	X			
	RV, EA, EB, EC	4DS6-27		X	X	X
	RV, EA, EB, EC	4DS6-27L		X	X	X
	SS7	4DS6-27			X	X

15. Access Service Interfaces and Transmission Specifications (Cont'd)

15.1 Switched Access Service (Cont'd)

15.1.2 Standard Transmission Specifications

Descriptions of the transmission specifications available with each Feature Group as a function of the Interface Group selected by the customer, are set forth in (A) through (D) following. Descriptions of each of the these Standard Transmission Specifications and the two Data Transmission Parameters mentioned are set forth respectively in (E) through (G) and 15.1.3(A) and (B) following:

(A) Feature Group A

FGA is provided with either Type B or Type C Transmission Specifications. The specifications for the associated parameters are guaranteed to the first point of switching. Type C Transmission Specifications are provided with Interface Group 1 and Type B is provided with Interface Groups 2 through 10. Type DB Data Transmission Parameters are provided with FGA to the first point of switching.

(B) Feature Group B

FGB is provided with either Type B or Type C Transmission Specifications. The specifications for the associated parameters are guaranteed to the end office when routed directly or to the first point of switching when routed via an access tandem. Type C Transmission Specifications are provided with Interface Group 1 and Type B is provided with Interface Groups 2 through 10. Type DB Data Transmission Parameters are provided with FGB to the first point of switching.

15. Access Service Interfaces and Transmission Specifications (Cont'd)

15.1 Switched Access Service (Cont'd)

15.1.2 Standard Transmission Specifications (Cont'd)

(C) Feature Group C

FGC is provided with either Type B or Type C Transmission Specifications as follows:

- When routed directly to the end office either Type B or Type C is provided.

- When routed to an access tandem only Type B is provided.

- Type B or Type C is provided on the transmission path from the access tandem to the end office.

Type C Transmission Specifications are provided with Interface Group 1 when routed directly to an end office. Type B is provided with Interface Groups 2 through 10, whether routed directly to an end office or to an access tandem.

Type DB Data Transmission Parameters are provided with FGC for the transmission path between the customer designated premises and the end office when directly routed to the end office, and between the customer designated premises and the access tandem and between the access tandem and the end office when routed via an access tandem.

15. Access Service Interfaces and Transmission Specifications (Cont'd)

15.1 Switched Access Service (Cont'd)

15.1.2 Standard Transmission Specifications (Cont'd)

(D) Feature Group D

FGD is provided with either Type A, Type B or Type C Transmission Specifications as follows:

- When routed to the end office either Type B or C is provided.

- When routed to an access tandem only Type A is provided.

- Type A is provided on the transmission path from the access tandem to the end office.

Type C Transmission Specifications are provided with Interface Group 1. Type A and Type B Transmission Specifications are provided with Interface Groups 2 through 10.

Type DB Data Transmission Parameters are provided with FGD for the transmission path between the customer designated premises and the end office when directly routed to the end office. Type DA Data Transmission Parameters are provided for the transmission path between the customer designated premises and the access tandem and between the access tandem and the end office when routed via an access tandem.

(E) Type A Transmission Specifications

Type A Transmission Specifications is provided with the following parameters:

(1) Loss Deviation
The maximum Loss Deviation of the 1004 Hz loss relative to the Expected Measured Loss (EML) is ± 2.0 dB.

15. Access Service Interfaces and Transmission Specifications (Cont'd)

15.1 Switched Access Service (Cont'd)

15.1.2 Standard Transmission Specifications (Cont'd)

(E) Type A Transmission Specifications (Cont'd)

(2) Attenuation Distortion

The maximum Attenuation Distortion in the 404 to 2804 Hz frequency band relative to the loss at 1004 Hz is -1.0 dB to +3.0 dB.

(3) C-Message Noise

The maximum C-Message Noise for the transmission path at the route miles listed is less than or equal to:

Route Miles	C-Message Noise
less than 50	32 dBrnCO
51 to 100	34 dBrnCO
101 to 200	37 dBrnCO
201 to 400	40 dBrnCO
401 to 1000	42 dBrnCO

(4) C-Notch Noise

The maximum C-Notch Noise, utilizing a -16 dBmO holding tone, is less than or equal to 45 dBrnCO.

15. Access Service Interfaces and Transmission Specifications (Cont'd)

15.1 Switched Access Service (Cont'd)

15.1.2 Standard Transmission Specifications (Cont'd)

(E) Type A Transmission Specifications (Cont'd)

(5) Echo Control

Echo Control, identified as Equal Level Echo Path Loss, and expressed as Echo Return Loss and Singing Return Loss, is dependent on the routing, i.e., whether the service is routed directly from the customer's point of termination (POT) to the end office or via an access tandem. It is equal to or greater than the following:

	Echo Return Loss	Singing Return Loss
POT to Access Tandem	21 dB	14 dB
POT to End Office		
- Direct	N/A	N/A
- Via Access Tandem	16 dB	11 dB

(6) Standard Return Loss

Standard Return Loss expressed as Echo Return Loss and Singing Return Loss on two-wire ports of a four-wire point of termination shall be equal to or greater than:

Echo Return Loss	Singing Return Loss
5 dB	2.5 dB

15. Access Service Interfaces and Transmission Specifications (Cont'd)

15.1 Switched Access Service (Cont'd)

15.1.2 Standard Transmission Specifications (Cont'd)

(F) Type B Transmission Specifications

Type B Transmission Specifications are provided with the following parameters:

(1) Loss Deviation

The maximum Loss Deviation of the 1004 Hz loss relative to the Expected Measured Loss (EML) is ± 2.5 dB.

(2) Attenuation Distortion

The maximum Attenuation Distortion in the 404 to 2804 Hz frequency band relative to loss at 1004 Hz is -2.0 dB to +4.0 dB.

(3) C-Message Noise

The maximum C-Message Noise for the transmission path at the route miles listed is less than or equal to:

	C-Message Noise*	
Route Miles	Type B1	Type B2
less than 50	32 dBrnCO	35 dBrnCO
51 to 100	33 dBrnCO	37 dBrnCO
101 to 200	35 dBrnCO	40 dBrnCO
201 to 400	37 dBrnCO	43 dBrnCO
401 to 1000	39 dBrnCO	45 dBrnCO

(4) C-Notch Noise

The maximum C-Notch Noise, utilizing a -16 dBm0 holding tone is less than or equal to 47 dBrnCO.

* For Feature Groups C and D only Type B2 will be provided. For Feature Groups A and B, Type B1 or B2 will be provided as set forth in Technical Reference TR-NPL-000334.

15. Access Service Interfaces and Transmission Specifications (Cont'd)

15.1 Switched Access Service (Cont'd)

15.1.2 Standard Transmission Specifications (Cont'd)

(F) Type B Transmission Specifications (Cont'd)

(5) Echo Control

Echo Control, identified as Impedance Balance for FGA and FGB and Equal Level Echo Path Loss for FGC and FGD, and expressed as Echo Return Loss (ERL) and Singing Return Loss (SRL), is dependent on the routing, i.e., whether the service is routed directly from the customer's point of termination (POT) to the end office or via an access tandem. The ERL and SRL also differ by Feature Group, type of termination, and type of transmission path. They are greater than or equal to the following:

	Echo Return Loss	Singing Return Loss
POT to Access Tandem		
- Terminated in 4-Wire trunk	21 dB	14 dB
- Terminated in 2-Wire trunk	16 dB	11 dB
POT to End Office		
- Direct	16 dB	11 dB
- Via Access Tandem		
- For FGB access	8 dB	4 dB
- For FGC access (Effective 4-Wire transmission path at end office)	16 dB	11 dB
- For FGC access (Effective 2-Wire transmission path at end office)	13 dB	6 dB

15. Access Service Interfaces and Transmission Specifications (Cont'd)

15.1 Switched Access Service (Cont'd)

15.1.2 Standard Transmission Specifications (Cont'd)

(F) Type B Transmission Specifications (Cont'd)

(6) Standard Return Loss

Standard Return Loss, expressed as Echo Return Loss and Singing Return Loss, on two-wire ports of a four-wire point of termination shall be equal to or greater than:

Echo Return Loss	Singing Return Loss
5 dB	2.5 dB

(G) Type C Transmission Specifications

Type C Transmission Specifications are provided with the following parameters:

(1) Loss Deviation

The maximum Loss Deviation of the 1004 Hz loss relative to the Expected Measured Loss (EML) is ± 3.0 dB.

(2) Attenuation Distortion

The maximum Attenuation Distortion in the 404 to 2804 Hz frequency band relative to loss at 1004 Hz is -2.0 dB to +5.5 dB.

15. Access Service Interfaces and Transmission Specifications (Cont'd)

15.1 Switched Access Service (Cont'd)

15.1.2 Standard Transmission Specifications (Cont'd)

(G) Type C Transmission Specifications (Cont'd)

(3) C-Message Noise

The maximum C-Message Noise for the transmission path at the route miles listed is less than or equal to:

	C-Message Noise*	
Route Miles	Type C1	Type C2
less than 50	32 dBrnCO	38 dBrnCO
51 to 100	33 dBrnCO	39 dBrnCO
101 to 200	35 dBrnCO	41 dBrnCO
201 to 400	37 dBrnCO	43 dBrnCO
401 to 1000	39 dBrnCO	45 dBrnCO

(4) C-Notch Noise

The maximum C-Notch Noise, utilizing a -16 dBm0 holding tone is less than or equal to 47 dBrnCO.

* For Feature Groups C and D only Type C2 will be provided. For Feature Groups A and B, Type C1 or C2 will be provided as set forth in Technical Reference TR-NPL-000334.

15. Access Service Interfaces and Transmission Specifications (Cont'd)

15.1 Switched Access Service (Cont'd)

15.1.2 Standard Transmission Specifications (Cont'd)

(G) Type C Transmission Specifications (Cont'd)

(5) Echo Control

Echo Control, identified as Return Loss and expressed as Echo Return Loss and Singing Return Loss is dependent on the routing, i.e., whether the service is routed directly from the customer's point of termination (POT) to the end office or via an access tandem. It is equal to or greater than the following:

	Echo Return Loss	Singing Return Loss
POT to Access Tandem	13 dB	6 dB
POT to End Office		
- Direct	13 dB	6 dB
- Via Access Tandem (for FGB only)	8 dB	4 dB

15.1.3 Data Transmission Parameters

Two types of Data Transmission Parameters, i.e., Type DA and Type DB, are provided for the Feature Group arrangements. Type DB is provided with Feature Groups A, B and C and also with Feature Group D when Feature Group D is directly routed to the end office. Type DA is only provided with Feature Group D and only when routed via an access tandem. Following are descriptions of each.

(A) Data Transmission Parameters Type DA

(1) Signal to C-Notched Noise Ratio

The Signal to C-Notched Noise Ratio is equal to or greater than 33 dB.

15. Access Service Interfaces and Transmission Specifications (Cont'd)

15.1 Switched Access Service (Cont'd)

15.1.3 Data Transmission Parameters (Cont'd)

(A) Data Transmission Parameters Type DA (Cont'd)

(2) Envelope Delay Distortion

The maximum Envelope Delay Distortion for the frequency bands and route miles specified is:

604 to 2804 Hz

less than 50 route miles	500 microseconds
equal to or greater than 50 route miles	900 microseconds

1004 to 2404 Hz

less than 50 route miles	200 microseconds
equal to or greater than 50 route miles	400 microseconds

(3) Impulse Noise Counts

The Impulse Noise Counts exceeding a 65 dBrnCO threshold in 15 minutes is no more than 15 counts.

(4) Intermodulation Distortion

The Second Order (R2) and Third Order (R3) Intermodulation Distortion products are equal to or greater than:

Second Order (R2)	33 dB
Third Order (R3)	37 dB

15. Access Service Interfaces and Transmission Specifications (Cont'd)

15.1 Switched Access Service (Cont'd)

15.1.3 Data Transmission Parameters (Cont'd)

(A) Data Transmission Parameters Type DA (Cont'd)

(5) Phase Jitter

The Phase Jitter over the 4-300 Hz frequency band is less than or equal to 5º peak-to-peak.

(6) Frequency Shift

The maximum Frequency Shift does not exceed -2 to +2 Hz.

(B) Data Transmission Parameters Type DB

(1) Signal to C-Notched Noise Ratio

The Signal to C-Notched Noise Ratio is equal to or greater than 30 dB.

(2) Envelope Delay Distortion

The maximum Envelope Delay Distortion for the frequency bands and route miles specified is:

604 to 2804 Hz

less than 50 route miles	800 microseconds
equal to or greater than 50 route miles	1000 microseconds

1004 to 2404 Hz

less than 50 route miles	320 microseconds
equal to or greater than 50 route miles	500 microseconds

15. Access Service Interfaces and Transmission Specifications (Cont'd)

15.1 Switched Access Service (Cont'd)

15.1.3 Data Transmission Parameters (Cont'd)

(B) Data Transmission Parameters Type DB (Cont'd)

(3) Impulse Noise Counts

The Impulse Noise Counts exceeding a 67 dBrnCO threshold in 15 minutes is no more than 15 counts.

(4) Intermodulation Distortion

The Second Order (R2) and Third Order (R3) Intermodulation Distortion products are equal to or greater than:

Second Order (R2)	31 dB
Third Order (R3)	34 dB

(5) Phase Jitter

The Phase Jitter over the 4-300 Hz frequency band is less than or equal to 7º peak-to-peak.

(6) Frequency Shift

The maximum Frequency Shift does not exceed -2 to +2 Hz.

15. Access Service Interfaces and Transmission Specifications (Cont'd)

15.2 Special Access Service

This section explains and lists the codes that the customer must specify when ordering Special Access Service, Switched Access Entrance Facilities, and Voice Grade and High Capacity Direct Trunked Transport. These codes provide a standardized means to relate the services being ordered to Special Access Service offerings contained in Section 7. preceding.

When ordering, the type of Special Access Service or Switched Access Entrance Facility or Direct Trunked Transport is described by two code sets, the Network Channel (NC) code and the Network Channel Interface (NCI) codes.

The Network Channel (NC) code consists of two elements. Element one is a Channel Service Code (character positions 1 and 2) that describes the channel service type in an abbreviated form. Element two is an Optional Feature Code (character positions 3 and 4) that identifies option codes available for each channel service code, such as C-conditioning or Improved Return Loss.

The Network Channel Interface (NCI) is used to identify interface specifications associated with a particular channel. This code describes the total wires, protocol, impedance, protocol options and transmission level point(s) reflecting physical and electrical characteristics between the Telephone Company and the customer.

On the following 3 pages are examples which explain the specific characters of the codes and which reference matrices and charts used in developing the codes. Included in the matrices are Service Designator (SD) codes which are used to identify variations of service within service types (e.g., TG1 = Telegraph). The SD and NC codes are displayed as components of the matrices designated as Technical Specifications packages in (A) through (G) following. Through the use of these matrices, SD codes may be converted to NC codes for service ordering purposes.

A chart is also provided in 15.2.2(A) following which contains information necessary to develop NCI codes.

15. Access Service Interfaces and Transmission Specifications (Cont'd)

15.2 Special Access Service (Cont'd)

Comprehensive lists of allowed Network Channel (NC) and Network Channel Interface (NCI) codes are contained in Special Report SR-STS-000307. However, not all services contained in this Special Report may be offered by the Telephone Company at this time.

Lastly, 15.2.2(C) following provides a list of compatible Network Channel Interfaces inasmuch as the Network Channel Interfaces associated with a given service need not always be the same, but all must be compatible.

Example No. 1: If the customer wishes to order a 4-wire voice grade circuit with 600 Ohms impedance, capable of data transmission, and with improved return loss, the customer might specify the following:

NC	NCI	SECNCI
LG-R	04DB2	04DA2-S

NC Code:
LG = Voice Grade Channel Service, VG6
-R = Improved Return Loss

NCI Code:
04 = Number of physical wires at CDP
DB = Data stream in VF frequency band at the customer designated main terminal location
2 = 600 Ohms impedance

SECNCI (Secondary NCI Code):
04 = Number of physical wires at CDP
DA = Data stream in VG frequency at the customer designated secondary terminal location
2 = 600 Ohms impedance
S = Sealing current option for 4-wire transmission

In the above example the NCI (Network Channel Interface) code is the interface requested at the customer's POT (Point of Termination) and the SECNCI (Secondary Network Channel Interface) code represents the interface at the end office serving the End User.

15. Access Service Interfaces and Transmission Specifications (Cont'd)

15.2 Special Access Service (Cont'd)

Example No. 2: If the customer wishes to order a FX circuit to a station, with 600 Ohms impedance, loop start signaling, which is 4-wire at the CDP and 2-wire at the end-user, the customer might specify:

NC	NCI	SECNCI
LC--	04LO2	02LS2

NC Code:
LC = Voice Grade Channel Service, VG2
-- = No Optional Features

NCI Code:
04 = Number of physical wires at CDP
LO = Loop start, loop signaling - open end
2 = 600 Ohms impedance

SECNCI (Secondary NCI Code):
02 = Number of physical wires at CDP
LS = Loop start signaling - closed end
2 = 600 Ohms impedance

Example No. 3: If the customer wishes to order a 1.544 Mbps Hi-cap facility with no channel options such as CO multiplexing, the customer might specify the following:

NC	NCI	SECNCI
HC--	04DS9-15	04DS9-15

NC Code:
HC = High Capacity Channel Service, HC1
-- = No Optional Features

NCI, SECNCI Code:
04 = Number of physical wires at CDP
DS = Digital hierarchy interface
9 = 100 Ohms impedance
15 = 1.544 Mbps (DS1) format

The preceding three examples use information contained in Special Report SR-STS-000307.

15. Access Service Interfaces and Transmission Specifications (Cont'd)

15.2 Special Access Service (Cont'd)

15.2.1 Network Channel (NC) Codes

In order to determine the NC code appropriate for the service to be ordered, the type of Special Access Service the customer wishes must be identified. This identification is accomplished by a Service Designator (SD) code. The broad categories of Service Designator codes (e.g., VG, MT, TG, etc.) are set forth in Section 7. preceding. Variations within service type (e.g., VG1, MTC, TG2, etc.) are described in the various Technical Publications cited in (A) through (G) following.

Having determined the specific service type to be ordered and its SD code, and having used the appropriate Technical Publication, the customer should match the SD code to the NC code using the following matrices. Once the NC code has been determined, the Network Channel Interface (NCI) code may be developed using the information set forth in 15.2.2 following and the guidelines concerning specific parameters available for each service type as set forth in the specified Technical Publication.

(A) Technical Specifications Packages Metallic Service

	Package			
SD Code	MTC*	MT1	MT2	MT3
NC Code	MQ	NT	NU	NV
Parameter				
DC Resistance Between Conductors	X	X	X	
Loop Resistance	X			X
Shunt Capacitance	X			X
Optional Features and Functions				
Three Premises Bridging	X	X		X
Series Bridging	X		X	

The technical specifications are described in Technical Reference TR-NPL-000336.

* All parameters are available within ranges selected by the customer where technically feasible.

15. Access Service Interfaces and Transmission Specifications (Cont'd)

15.2 Special Access Service (Cont'd)

15.2.1 Network Channel (NC) Codes (Cont'd)

(B) Technical Specifications Packages Telegraph Grade Service

	Package		
SD Code	TGC*	TG1	TG2
NC Code	NQ	NW	NY
Parameter			
Telegraph Distortion	X	X	X
Optional Features and Functions			
Telegraph Bridging	X	X	X

The technical specifications are described in Technical Reference TR-NPL-000336.

* All parameters are available within ranges selected by the customer where technically feasible.

15. Access Service Interfaces and Transmission Specifications (Cont'd)

15.2 Special Access Service (Cont'd)

15.2.1 Network Channel (NC) Codes (Cont'd)

(C) Technical Specifications Packages Voice Grade Service

	Package VG-													
SD Code	C*	1	2	3	4	5	6	7	8	9	10	11	12	W
NC Code	LQ	LB	LC	LD	LE	LF	LG	LH	LJ	LK	LN	LP	LR	SE
Parameter														
Attenuation Distortion	X	X	X	X	X	X	X	X	X	X	X	X	X	X
C-Message Noise	X	X	X	X	X	X	X	X	X	X	X	X	X	X
Echo Control	X	X	X	X		X		X	X			X	X	X
Envelope Delay Distortion	X						X	X	X	X	X	X	X	X
Frequency Shift	X						X	X	X	X	X	X	X	X
Impulse Noise	X					X	X	X	X	X	X	X	X	X
Intermodulation Distortion	X						X	X	X	X	X	X		X
Loss Deviation	X	X	X	X	X	X	X	X	X	X	X	X	X	X
Phase Hits, Gain Hits, and Dropouts	X													
Phase Jitter	X						X	X	X	X	X	X		X
Signal-to-C Message Noise					X									
Signal-to-C Notch Noise	X					X	X	X	X	X	X	X	X	X

The technical specifications for these parameters (except for dropouts, phase hits, and gain hits) are described in Technical References TR-NPL-000334 and TR-TSY-000335. The technical specifications for dropouts, phase hits, and gain hits are described in Technical Reference PUB 41004, Table 4.

* The desired parameters are selected by the customer from the list of available parameters.

15. Access Service Interfaces and Transmission Specifications (Cont'd)

15.2 Special Access Service (Cont'd)

15.2.1 Network Channel (NC) Codes (Cont'd)

(C) Technical Specifications Packages Voice Grade Service (Cont'd)

SD Code	C*	1	2	3	4	5	6	7	8	9	10	11	12	W
NC Code	LQ	LB	LC	LD	LE	LF	LG	LH	LJ	LK	LN	LP	LR	SE
Optional Features and Functions														
Central Office Bridging Capability	X		X			X	X				X	X	X	
Central Office Multiplexing	X						X							
Conditioning: C-Type	X					X	X	X	X	X	X			
Improved Attenuation Distortion		X					X	X	X	X	X	X		
Improved Envelope Delay Distortion		X					X	X	X	X	X	X		
Sealing Current	X						X							
Data Capability	X						X	X			X			
Telephoto Capability		X											X	
Customer Specified Premises Receive Level	X		X	X				X	X	X				
Improved Return Loss for Effective Four-Wire Transmission	X	X	X	X	X	X	X	X	X	X	X	X	X	
for Effective Two-Wire Transmission	X		X	X				X						
Improved Two-Wire Voice Transmission												X		
PPSN Interface Arrangement		X									X			
Selective Signaling Arrangement	X		X			X	X				X	X	X	
Signaling Capability	X	X	X	X				X	X	X				
Transfer Arrangement	X	X	X	X	X	X	X	X	X	X	X	X	X	

15. Access Service Interfaces and Transmission Specifications (Cont'd)

15.2 Special Access Service (Cont'd)

15.2.1 Network Channel (NC) Codes (Cont'd)

(D) Technical Specifications Packages Program Audio Service

	Package				
SD Code	APC*	AP1	AP2	AP3	AP4
NC Code	PQ	PE	PF	PJ	PK
Parameter					
Actual Measured Loss	X	X	X	X	X
Amplitude Tracking	X				
Crosstalk	X	X	X	X	X
Distortion Tracking	X				
Gain/Frequency Distortion	X	X	X	X	X
Group Delay	X				
Noise	X	X	X	X	X
Phrase Tracking	X				
Short-Term Gain Stability	X				
Short-Term Loss	X				
Total Distortion	X	X	X	X	X
Optional Features and Functions					
Central Office Bridging Capability	X	X	X	X	X
Gain Conditioning	X	X	X	X	X
Stereo	X				X

The technical specifications are described in Technical Reference TR-NPL-000337 and associated Addendum.

* The desired parameters are selected by the customer from the list of available parameters.

15. Access Service Interfaces and Transmission Specifications (Cont'd)

15.2 Special Access Service (Cont'd)

15.2.1 Network Channel (NC) Codes (Cont'd)

(F) Technical Specifications Packages Digital Data Service

	Package					
SD Code	D1	D2	D3	D4	D5	D6
NC Code	XA	XB	XG	XH	XE	YN
Parameter/Hubbed						
Error-Free Seconds	X	X	X	X	X	X
Optional Features and Functions/Hubbed						
Central Office Bridging Capability	X	X	X	X	X	X
PPSN Interface Transfer Arrangement	X	X	X	X	X	X
Transfer Arrangement	X	X	X	X	X	X

The Telephone Company will provide a channel capable of meeting a monthly average performance equal to or greater than 99.875% error-free seconds (if provided through a Digital Data hub) while the channel is in service, if it is measured through a CSU equivalent which is designed, manufactured, and maintained to conform with the specifications contained in Technical Reference PUB 62310.

Optional Features and Functions/Non-Hubbed						
Public Packet Data Arrangement				X	X	

Voltages which are compatible with Digital Data Service are delineated in Technical ReferenceTR-NWT-000341.

15. Access Service Interfaces and Transmission Specifications (Cont'd)

15.2 Special Access Service (Cont'd)

15.2.1 Network Channel (NC) Codes (Cont'd)

(G) Technical Specifications Packages High Capacity Service

	Package					
SD Code	HC0	HC1	HC1C	HC2	HC3	HC4
NC Code	HS	HC	HD	HE	HF	HG
Parameters						
Error-Free Seconds		X				
Optional Features and Functions						
Automatic Loop Transfer			X			
Central Office Multiplexing:						
DS3 to DS1					X	
DS1 to Voice		X				
DS1 to DS0		X				
DS0 to Subrate*	X					
Transfer Arrangement		X				
Clear Channel Capability		X				

A channel with technical specifications package HC1 will be capable of an error-free second performance of 98.75% over a continuous 24 hour period as measured at the 1.544 Mbps rate through a CSU equivalent which is designed, manufactured, and maintained to conform with the specifications contained in Technical Reference PUB 62411.

* Available only on a channel of 1.544 Mbps facility to a Telephone Company Hub.

15. Access Service Interfaces and Transmission Specifications (Cont'd)

15.2 Special Access Service (Cont'd)

15.2.2 Network Channel Interface (NCI) Codes

The electrical interface with the Telephone Company for Special Access Services, is defined by an interface code. There are interface codes for both the customer designated premises and the point of termination. Three examples of NCI codes are found in 15.2 preceeding.

(A) Parameter Codes and Options

Parameter

Code		Option	Definition
AB	-		accepts 20 Hz ringing signal at customer's point of termination
AC	-		accepts 20 Hz ringing signal at customer's end user's point of termination
AH	-		analog high capacity interface
	-	B	60 kHz to 108 kHz (12 channels)
	-	C	312 kHz to 552 kHz (60 channels)
	-	D	564 kHz to 3084 kHz (600 channels)
CT	-		Centrex Tie Trunk Termination
CS	-		digital hierarchy interface at Digital Cross Connect System (DCS)
	-	15	1.544 Mbps (DS1) ANSI Extended Superframe (ESF) Format and B8ZS Clear Channel Capability
	-	15A	1.544 Mbps (DS1) Superframe (SF) format
	-	15B	1.544 Mbps (DS1) Superframe (SF) format and B8ZS Clear Channel Capability
	-	15K	1.544 Mbps (DS1) Extended Superframe (ESF)
DA	-		data stream in VF frequency band at customer's end user's point of termination
DB	-		data stream in VF frequency band at customer's point of termination
	-	10	VF for TG1 and TG2
	-	43	VF for 43 Telegraph Carrier type signals TG1 and TG2
DC	-		direct current or voltage
	-	1	monitoring interface with series RC combination (McCulloh format)
	-	2	Telephone Company energized alarm channel
	-	3	Metallic facilities (DC continuity) for direct current/low frequency control signals or slow speed data (30 baud)
DD	-		DATAPHONE Select-A-Station (and TABS) interface at customer's point of termination
DE	-		DATAPHONE Select-A-Station (and TABS) interface at the customer's end user's point of termination

15. Access Service Interfaces and Transmission Specifications (Cont'd)

15.2 Special Access Service (Cont'd)

15.2.2 Network Channel Interface (NCI) Codes (Cont'd)

(A) Parameter Codes and Options (Cont'd)

Parameter (Cont'd)

Code		Option	Definition
DS	-		digital hierarchy interface
	-	5	1.544 Mbps (DS1) format per PUB 62411 plus D4
	-	15E	8-bit PCM encoded in one 64 kbps of the DS1 signal
	-	15F	8-bit PCM encoded in two 64 kbps of the DS1 signal
	-	15G	8-bit PCM encoded in three 64 kbps of the DS1 signal
	-	15H	14/11-bit PCM encoded in six 64 kbps of the DS1 signal
	-	15J	1.544 Mbps format per PUB 62411
	-	15K	1.544 Mbps format per PUB 62411 plus extended framing format
	-	15L	1.544 Mbps (DS1) with SF signaling
	-	44	44.736 Mbps (DS3)
	-	44L	44.736 Mbps (DS3) with SF signaling
DU	-		digital access interface
	-	24	2.4 kbps
	-	48	4.8 kbps
	-	19	19.2 kbps
	-	56	56.0 kbps
	-	96	9.6 kbps
	-	64	64.0 kbps
	-	A	1.544 Mbps format per PUB 62411
	-	B	1.544 Mbps format per PUB 62411 plus D4
	-	C	1.544 Mbps format per PUB 62411 plus extended framing format
	-	1KN	1.544 Mbps ANSI Extended Superframe (ESF) Format without line power
	-	1SN	1.544 Mbps ANSI Extended Superframe (ESF) Format with B8ZS Clear Channel Capability and without line power
	-	AN	1.544 Mbps free-framing format without line power (only avail. to U.S. Govt. agencies)
	-	BN	1.544 Mbps Superframe (SF) Format without line power
	-	DN	1.544 Mbps Superframe (SF) Format with B8ZS Clear Channel Capability without line power
DX	-		duplex signaling interface at customer's point of termination
DY	-		duplex signaling interface at customer's end user's point of termination

15. Access Service Interfaces and Transmission Specifications (Cont'd)

15.2 Special Access Service (Cont'd)

15.2.2 Network Channel Interface (NCI) Codes (Cont'd)

(A) Parameter Codes and Options (Cont'd)

Parameter (Cont'd)

Code		Option	Definition
EA	-	E	Type I E&M Lead Signaling. Customer at POT or customer's end user at POT originates on E Lead.
EA	-	M	Type I E&M Lead Signaling. Customer at POT or customer's end user at POT originates on M Lead.
EB	-	E	Type II E&M Lead Signaling. Customer at POT or customer's end user at POT originates on E Lead.
EB	-	M	Type II E&M Lead Signaling. Customer at POT or customer's end user at POT originates on M Lead.
EC	-		Type III E&M signaling at customer POT
EX	-	A	tandem channel unit signaling for loop start or ground start and customer supplies open end (dial tone, etc.) functions.
EX	-	B	tandem channel unit signaling for loop start or ground start and customer supplies closed end (dial pulsing, etc.) functions.
GO	-		ground start loop signaling - open end function by customer or customer's end user
GS	-		ground start loop signaling - closed end function by customer or customer's end user
IA	-		E.I.A. (25 pin RS-232)
KD	-	A	Ethernet at 10 Mbps, full duplex LAN
	-	B	Ethernet at 10 Mbps, half duplex LAN
KE	-	A	Ethernet at 100 Mbps, full duplex LAN
	-	B	Ethernet at 100 Mbps, half duplex LAN
KF	-	L	Ethernet at 1000 Mbps, LAN
KR	-	A1	Ethernet Rate–Adjustable 1 Gbps, 100 Mbps, full duplex
	-	A3	Ethernet Rate–Adjustable 1 Gbps, 300 Mbps, full duplex
	-	A6	Ethernet Rate-Adjustable 1 Gbps, 600 Mbps, full duplex
	-	AB	Ethernet Rate-Adjustable 1 Gbps, 150 Mbps, full duplex
	-	AK	Ethernet Rate-Adjustable 1 Gbps, 450 Mbps, full duplex
KQ	-	A2	Ethernet Rate-Adjustable 1 Gbps, 20 Mbps, full duplex
	-	B2	Ethernet Rate-Adjustable 1 Gbps, 20 Mbps, half duplex
	-	A5	Ethernet Rate-Adjustable 1 Gbps, 50 Mbps, full duplex
	-	B5	Ethernet Rate-Adjustable 1 Gbps, 50 Mbps, half duplex

15. Access Service Interfaces and Transmission Specifications (Cont'd)

15.2 Special Access Service (Cont'd)

15.2.2 Network Channel Interface (NCI) Codes (Cont'd)

(A) Parameter Codes and Options (Cont'd)

Parameter (Cont'd)

Code	Option	Definition
LA	-	end user loop start loop signaling - Type A OPS registered port open end
LB	-	end user loop start loop signaling - Type B OPS registered port open end
LC	-	end user loop start loop signaling - Type C OPS registered port open end
LO	-	loop start loop signaling - open end function by customer or customer's end user
LR	-	20 Hz automatic ringdown interface at customer with Telephone Company provided PLAR
LS	-	loop start loop signaling - closed end function by customer or customer's end user
NO	-	no signaling interface, transmission only

15. Access Service Interfaces and Transmission Specifications (Cont'd)

15.2 Special Access Service (Cont'd)

15.2.2 Network Channel Interface (NCI) Codes (Cont'd)

(A) Parameter Codes and Options (Cont'd)

Parameter (Cont'd)

Code		Option	Definition
PG	-		program transmission - no dc signaling
		-	1 nominal frequency from 50 to 15000 Hz
		-	3 nominal frequency from 200 to 3500 Hz
		-	5 nominal frequency from 100 to 5000 Hz
		-	8 nominal frequency from 50 to 8000 Hz
PR	-		protective relaying*
RV	-	0	reverse battery signaling, one way operation, originate by customer
	-	T	reverse battery signaling, one way operation, terminate function by customer or customer's end user
SF	-		single frequency signaling with VF band at either customer POT or customer's end user POT
TF	-		telephotograph interface
TT	-		telegraph/teletypewriter interface at either customer POT or customer's end user POT
	-	2	20.0 milliamperes
	-	3	3.0 milliamperes
	-	6	62.5 milliamperes
TV			television interface
	-	1	combined (diplexed) video and one audio signal
	-	2	combined (diplexed) video and two audio signals
	-	5	video plus one (or two) audio 5 kHz signal(s) or one (or two) two wire
	-	15	video plus one (or two) audio 15 kHz signal(s)

* Available only for the transmission of audio tone protective relaying signals used in the protection of electric power systems during fault conditions.

15. Access Service Interfaces and Transmission Specifications (Cont'd)

15.2 Special Access Service (Cont'd)

15.2.2 Network Channel Interface (NCI) Codes (Cont'd)

(B) Impedance

The nominal reference impedance with which the channel will be terminated for the purpose of evaluating transmission performance:

Value (ohms)	Code(s)
110	0
150	1
600	2
900	3+
135	5
75	6
124	7
Variable	8
100	9

* For those interface codes with a 4-wire transmission path at the customer designated POT, rather than a standard 900 ohm impedance the code (3) denotes a customer provided transmission equipment termination.

15. Access Service Interfaces and Transmission Specifications (Cont'd)

15.2 Special Access Service (Cont'd)

15.2.2 Network Channel Interface (NCI) Codes (Cont'd)

(C) Compatible Network Channel Interfaces

The following tables show the Network Channel Interface codes (NCIs) which are compatible:

(1) Metallic

Compatible CIs	
2DC8-1	2DC8-2
2DC8-3	2DC8-3
4DS8-	2DC8-1
4DS8-	2DC8-2

(2) Telegraph Grade

Compatible CIs		Compatible CIs	
2DB2-10	10IA8	4DB2-10	10IA8
	2TT2-2		2TT2-2
	4TT2-2		4TT2-2
2DB2-43*	10IA8	4DB2-43*	10IA8
	2TT2-2		2TT2-6
	2TT2-6		4TT2-2
	4TT2-2		
		4DS8-	10IA8
2TT2-2	2TT2-2		2TT2-2
			2TT2-6
2TT2-3	2TT2-2		4TT2-2
	4TT2-2		4TT2-6
2TT2-6	2TT2-6	4TT2-2	4TT2-2
	4TT2-6		
		4TT2-6	2TT2-6

* Supplemental Channel Assignment information required.

15. Access Service Interfaces and Transmission Specifications (Cont'd)

15.2 Special Access Service (Cont'd)

15.2.2 Network Channel Interface (NCI) Codes (Cont'd)

(C) Compatible Network Channel Interfaces (Cont'd)

(3) Voice Grade

Compatible CIs		Compatible CIs		Compatible CIs	
2AB2	2AC2	2DB2	2DA2	2LR2	2LR2
2AB3	2AC2	2DB3	2DA2	2LR3	2LR2
2CT3	2DY2	2DX3	2LA2	2LS	2GS
	4DS8		2LB2		2LS
	4DX2		2LC2		4GS
	4DX3		2LO3		4LS
	4DY2		2LS2		
	4EA2-E		2LS3	2LS2	2LA2
	4EA2-M				2LB2
	4SF2	2GO2	2GS2		2LC2
	4SF3		2GS3		
	6DX2			2LS3	2LA2
	6DY2	2GO3	2GS2		2LB2
	6DY3		2GS3		2LC2
	6EA2-E				
	6EA2-M	2GS	2GS	2NO2	2DA2
	6EB2-E		2LS		2NO2
	6EB2-M		4GS		
	6EB3-E		4LS	2NO3	2NO2
	8EB2-E				2PR2
	8EB2-M	2L02	2LS2		
	8EC2		2LS3	2TF3	2TF2
	9DY2				
	9DY3	2L03	2LS2		
	9EA2	2LS3			
	9EA3				

15. Access Service Interfaces and Transmission Specifications (Cont'd)

15.2 Special Access Service (Cont'd)

15.2.2 Network Channel Interface (NCI) Codes (Cont'd)

(C) Compatible Network Channel Interfaces (Cont'd)

(3) Voice Grade (Cont'd)

Compatible CIs		Compatible CIs		Compatible CIs	
4AB2	2AC2				
	4AB2				
	4AC2				
	4SF2				
4AB3	2AC2				
	4AC2				
	4SF2				
4AC2	2AC2				
	4AC2				
		4DS8-	2AC2	4DS8-	4DG2
			2DA2		4LR2
			2DY2		4LS2
			2GO2		4NO2
4DA2	4DA2		2GO3		4PR2
			2GS2		4RV2-T
4DB2	2DA2		2GS3		4SF2
	2NO2		2LA2		4SF3
	2PR2		2LB2		4TF2
	4DA2		2LC2		6DA2
	4DB2		2LO2		6DY2
	4NO2		2LO3		6DY3
	4PR2		2LR2		6EA2-E
	6DA2		2LS2		6EA2-M
			2LS3		6EB2-E
4DD3	2DE2		2NO2		6EB2-M
	4DE2		2PR2		6GS2
			2RV2-T		6LS2
			2TF2		8EB2-E
			4AC2		8EB2-M
			4DA2		9DY2
			4DE2		9DY3
			4DX2		9EA2
			4DX3		9EA3
			4DY2		
			4EA2-E		
			4EA2-M		

15. Access Service Interfaces and Transmission Specifications (Cont'd)

15.2 Special Access Service (Cont'd)

15.2.2 Network Channel Interface (NCI) Codes (Cont'd)

(C) Compatible Network Channel Interfaces (Cont'd)

(3) Voice Grade (Cont'd)

Compatible CIs		Compatible CIs		Compatible CIs	
4DX2	2DY2	4DX2	8EB2-E	4DX3	6DY2
	2LA2		8EB2-M		6DY3
	2LB2		9DY2		6EA2-E
	2LC2		9DY3		6EA2-M
	2LO3		9EA2		6EB2-E
	2LS2		9EA3		6EB2-M
	2LS3				6LS2
	2RV2-T	4DX3	2DY2		8EB2-E
	4DX2		2LA2		8EB2-M
	4DY2		2LB2		9DY2
	4EA2-E		2LC2		9DY3
	4EA2-M		2LO3		9EA2
	4LS2		2LS2		9EA3
	4RV2-T		2LS3		
	4SF2		2RV2-T	4DY2	2DY2
	4SF3		4DX2		4DY2
	6DY2		4DX3		
	6DY3		4DY2		
	6EA2-E		4EA2-E		
	6EA2-M		4EA2-M		
	6EB2-E		4LS2		
	6EB2-M		4RV2-T		
	6LS2		4SF2		
			4SF3		

15. Access Service Interfaces and Transmission Specifications (Cont'd)

15.2 Special Access Service (Cont'd)

15.2.2 Network Channel Interface (NCI) Codes (Cont'd)

(C) Compatible Network Channel Interfaces (Cont'd)

(3) Voice Grade (Cont'd)

Compatible CIs		Compatible CIs		Compatible CIs	
4EA2-E	2DY2	4EA3-E	2DY2	4GO2	2GO2
	4DY2		4DY2		2GO3
	4EA2-E		4EA2-E		2GS2
	4EA2-M		4EA2-M		2GS3
	4SF2		4SF2		4GS2
	6DY2		6DY2		4SF2
	6DY3		6DY3		6GS2
	6EB2-E		6EA2-E		
	6EB2-M		6EA2-M	4GO3	2GO2
	8EB2-E		6EB2-E		2GS2
	8EB2-M		6EB2-M		2GS3
	9DY2		8EB2-E		4GS2
	9DY3		8EB2-M		4SF2
			9DY2		6GS2
4EA2-M	2DY2		9DY3		
	4DY2		9EA2		
	4EA2-M		9EA3	4GS	2GS
	4SF2				2LS
	6DY2				4GS
	6DY3				4LS
	6EB2-E				
	6EB2-M				
	8EB2-E				
	8EB2-M				
	9DY2				
	9DY3				

15. Access Service Interfaces and Transmission Specifications (Cont'd)

15.2 Special Access Service (Cont'd)

15.2.2 Network Channel Interface (NCI) Codes (Cont'd)

(C) Compatible Network Channel Interfaces (Cont'd)

(3) Voice Grade (Cont'd)

Compatible CIs		Compatible CIs		Compatible CIs	
4LO2	2LS2	4LS3	2LA2	4SF2	2LO3
	2LS3		2LB2		2LR2
	4LS2		2LC2		2LS2
	4SF2		2LO2		2LS3
	6LS2		2LO3		2RV2-T
			4SF2		4AC2
4LO3	2LS2				4DY2
	2LS3	4NO2	2DA2		4LS2
	4LS2		2DE2		4RV2-T
	4SF2		2NO2		4SF2
	6LS2		4DA2		6DY2
			4DE2		6DY3
4LR2	2LR2		4NO2		6GS2
	4LR2		6DA2		9DY2
	4SF2				9DY3
		4RV2-0	2RV2-T		
4LR3	2LR2		4RV2-T	4SF3	2DY2
	4LR2		4SF2		2GO3
	4SF2				2GS2
					2GS3
4LS	2GS	4SF2	2AC2		2LA2
	2LS		2DY2		2LB2
	4GS		2GS2		2LC2
	4LS		2GS3		2LO3
			2LA2		2LR2
4LS2	2LA2		2LB2		
	2LB2		2LC2		
	2LC2				
	2LO2				
	2LO3				

15. Access Service Interfaces and Transmission Specifications (Cont'd)

15.2 Special Access Service (Cont'd)

15.2.2 Network Channel Interface (NCI) Codes (Cont'd)

(C) Compatible Network Channel Interfaces (Cont'd)

(3) Voice Grade (Cont'd)

Compatible CIs		Compatible CIs		Compatible CIs	
4SF3	2LS2	6DA	4DA2	6DY3	2DY2
	2LS3		6DA2		4DY2
	2RV2-T				6DY2
	4DY2	6DX2	2DY2		6DY3
	4EA2-E		4DY2		
	4EA2-M		4EA2-E	6EA2-E	2AC2
	4GS2		4EA2-M		2DY2
	4LR2		4SF2		2LA2
	4LS2		6DY2		2LB2
	4RV2-T		6DY3		2LC2
	4SF2		6EA2-E		2LO3
	4SF3		6EA2-M		2LS2
	6DY2		6EB2-E		2LS3
	6DY3		6EB2-M		2RV2-T
	6EB2-E		8EB2-E		4AC2
	6EB2-M		8EB2-M		4DY2
	6GS2		9DY2		EA2-E
	6LS2		9DY3		4EA2-M
	9DY2		9EA2		4LS2
	9DY3		9EA3		4RV2-T
	9EA2				4SF2
	9EA3	6DY2	2DY2		4SF3
			4DY2		6DY2
4TF2	2TF2		6DY2		6DY3
	4TF2				6EA2-E
					6EA2-M

15. Access Service Interfaces and Transmission Specifications (Cont'd)

15.2 Special Access Service (Cont'd)

15.2.2 Network Channel Interface (NCI) Codes (Cont'd)

(C) Compatible Network Channel Interfaces (Cont'd)

(3) Voice Grade (Cont'd)

Compatible CIs		Compatible CIs		Compatible CIs	
6EA2-E	6EB2-E	6EA2-M	6DY2	6EB3-E	2DY2
	6EB2-M		6DY3		4DY2
	6LS2		6EA2-M		4EA2-E
	8EB2-E		6EB2-E		4EA2-M
	8EB2-M		6EB2-M		4SF2
	9DY2		6LS2		6DY2
	9DY3		8EB2-E		6DY3
			8EB2-M		6EA2-E
6EA2-M	2AC2		9DY2		6EA2-M
	2DY2		9DY3		8EB2-E
	2LA2				8EB2-M
	2LB2	6EB2-E	2DY2		9DY2
	2LC2		4DY2		9DY3
	2LO3		4SF2		9EA2
	2LS2		6DY2		9EA3
	2LS3		6DY3		
	2RV2-T		6EB2-E	6EX2-A	2GS2
	4AC2		6EB2-M		2GS3
	4DY2		9DY2		2LS2
	4EA2-E		9DY3		2LS3
	4EA2-M				4GS2
	4LS2	6EB2-M	2DY2		4LS2
	4RV2-T		4DY2		4SF2
	4SF2		4SF2		6GS2
	4SF3		6DY2		6LS2
			6DY3		
			6EB2-M		
			9DY2		
			9DY3		

15. Access Service Interfaces and Transmission Specifications (Cont'd)

15.2 Special Access Service (Cont'd)

15.2.2 Network Channel Interface (NCI) Codes (Cont'd)

(C) Compatible Network Channel Interfaces (Cont'd)

(3) Voice Grade (Cont'd)

Compatible CIs		Compatible CIs		Compatible CIs	
6EX2-B	2GO3	8EB2-E	2AC2	8EB2-M	2AC2
	2LA2		2DY2		2DY2
	2LB2		2LA2		2LA2
	2LC2		2LB2		2LB2
	2LO2		2LC2		2LC2
	2LO3		2LO3		2LO3
	2LR2		2LS2		2LS2
	4LR2		2LS3		2LS3
	4SF2		2RV2-T		2RV2-T
			4AC2		4AC2
6GO2	2GO2		4DY2		4DY2
	2GS2		4LS2		4LS2
	2GS3		4RV2-T		4RV2-T
	4GS2		4SF2		4SF2
	4SF2		4SF3		4SF3
	6GS2		6DY2		6DY2
			6DY3		6DY3
6LO2	2LS2		6EB2-E		6EB2-E
	2LS3		6EB2-M		6EB2-M
	4LS2		6LS2		6LS2
	4SF2		8EB2-E		8EB2-M
	6LS2		8EB2-M		9DY2
			9DY2		9DY3
6LS2	2LA2		9DY3		
	2LB2				
	2LC2				
	2LO2				
	2LO3				
	4SF2				

15. Access Service Interfaces and Transmission Specifications (Cont'd)

15.2 Special Access Service (Cont'd)

15.2.2 Network Channel Interface (NCI) Codes (Cont'd)

(C) Compatible Network Channel Interfaces (Cont'd)

(3) Voice Grade (Cont'd)

Compatible CIs		Compatible CIs		Compatible CIs	
8EC2	2DY2	9DY2	2DY2	9EA3	2DY2
	4DY2		4DY2		4DY2
	4EA2-E		6DY2		4EA2-E
	4EA2-M		6DY3		4EA2-M
	4SF2		9DY2		6DY2
	6DY2				6DY3
	6DY3	9DY3	2DY2		6EA2-E
	6EA2-E		4DY2		6EA2-M
	6EA2-M		6DY2		6EB2-E
	6EB2-E		6DY3		6EB2-M
	6EB2-M		9DY2		8EB2-E
	8EB2-E		9DY3		8EB2-M
	8EB2-M				9DY2
	9DY2	9EA2	2DY2		9DY3
	9DY3		4DY2		9EA3
	9EA2		4EA2-E		
	9EA3		4EA2-M		
			6DY2		
			6DY3		
			6EA2-E		
			6EA2-M		
			6EB2-E		
			6EB2-M		
			8EB2-E		
			8EB2-M		
			9DY2		
			9DY3		
			9EA2		
			9EA3		

15. Access Service Interfaces and Transmission Specifications (Cont'd)

15.2 Special Access Service (Cont'd)

15.2.2 Network Channel Interface (NCI) Codes (Cont'd)

(C) Compatible Network Channel Interfaces (Cont'd)

(4) Program Audio

Compatible CIs		Compatible CIs	
2PG2-1	2PG1-1 2PG2-1	4DS8-15E	2PG1-3 2PG2-3
2PG2-3	2PG1-3 2PG2-3	4DS8-15F	2PG1-5 2PG2-5
2PG2-5	2PG1-5 2PG2-5	4DS8-15G	2PG1-8 2PG2-8
2PG2-8	2PG1-8 2PG2-8	4DA8-15H	2PG1-1 2PG2-1

15. Access Service Interfaces and Transmission Specifications (Cont'd)

15.2 Special Access Service (Cont'd)

15.2.2 Network Channel Interface (NCI) Codes (Cont'd)

(C) Compatible Network Channel Interfaces (Cont'd)

(6) Digital Data

Compatible CIs		Compatible CIs		Compatible CIs	
4DS8-15	4DS8-15+	4DU5-24	4DU5-24	6DU5-24	6DU5-24
	4DU5-24				
	4DU5-48	4DU5-48	4DU5-48	6DU5-48	6DU5-48
	4DU5-56				
	4DU5-96	4DU5-96	4DU5-96	6DU5-56	6DU5-56
	6DU5-24				
	6DU5-48	4DU8-56	4DU5-56	6DU5-96	6DU5-96
	6DU5-96				

\+ Available only as a cross connect of two digital channels at appropriate digital speeds at a Telephone Company hub.

15. Access Service Interfaces and Transmission Specifications (Cont'd)

15.2 Special Access Service (Cont'd)

15.2.2 Network Channel Interface (NCI) Codes (Cont'd)

(C) Compatible Network Channel Interfaces (Cont'd)

(7) High Capacity

Compatible CIs		Compatible CIs	
4DS0-63	4DS0-63 4DU8-A,B or C 6DU8-A,B or C	4DS8-15J	4DU8-A 6DU8-A
4DS6-27	4DS6-27 4DU8-A,B or C 6DU8-A,B or C	4DS8-15K	4DU8-B 4DU8-C 6DU8-B 6DU8-C
4DS6-44	4DS6-44 4DU8-A,B or C 6DU8-A,B or C	4DS8-31	4DS8-31 4DU8-A,B or C 6DU8-A,B or C
4DS8-15	4DS8-15+ 4DU8-B	4DU8-A,B or C	4DU8-A,B or C

(8) Synchronous Optical Channel Service

Compatible CIs		Compatible CIs	
4DS9-1S	4DU9-1S	02SOF-A	02SOF-A
4DS9-1K	4DU9-1K	02SOF-B	02SOF-B
		02SOF-C	02SOF-C
		02SOF-D	02SOF-D
		02SOF-E	02SOF-E
		02SOF-F	02SOF-F

16. Public Packet Data Network

Public Packet Data Networks utilize separate data networks, comprised of switching and transmission facilities. The networks provide for the transfer of data provided by a customer in a frame or cell format. The data is separated into discrete segments for transmission through the public packet data network.

16.1 Frame Relay Access Service

16.1.1 General

(A) General

Frame Relay Access Service (FRAS) is a medium-speed, connection-oriented packet-switched data service that allows for the interconnection of Local Area Networks (LANs) or other compatible end user customer premises equipment for the purpose of connecting to an interstate frame relay network. FRAS also allows for the interconnection of a customer designated premises to a DSL Access Service Connection Point. The terminal equipment accumulates the customer data and puts it into a frame relay format suitable for transmission over the FRAS network. This terminal equipment must conform to American National Standards Institute and Telecommunication Standardization Bureau of the International Telecommunication Union (ITU- T), Committee Consultat de International Telegraphique et Telephonique (CCITT) standards.

FRAS permits customers to share network bandwidth for data transmissions.

Rates and charges for FRAS are set forth in Section 17 following. The application of rates for FRAS is described in 16.1.2 following.

In addition to the regulations and charges specified in this section, the general regulations and charges specified in other sections of this tariff apply as appropriate.

(B) Service Description

FRAS is a transport service that facilitates the exchange of variable length information units (frames) between customer connections. Frames travel a fixed path through the network with an address that specifies the permanent virtual connection. Addresses are read by the network processor and the frames are relayed to the preassigned destination.

16. Public Packet Data Network (Cont'd)

16.1 Frame Relay Access Service (Cont'd)

16.1.1 General (Cont'd)

(B) Service Description (Cont'd)

FRAS service includes: the Frame Relay Access Connection, the Frame Relay Inter-network Connection, and Permanent Virtual Connections (PVC) which have associated Committed Information Rates (CIRs).

The Frame Relay Access Connection and the Frame Relay Inter-network Connection elements provide access to a Telephone Company wire center equipped with a frame relay switch. A generic view of FRAS access is shown in 16.1.2(A) following. Frame Relay Access Service connections are available from the wire centers as identified in National Exchange Carrier Association, Inc. Tariff F.C.C. No. 4.

The Frame Relay Access Connection combines a frame relay compatible 56.0 kbps, 64.0 kbps, 1.544 Mbps or 44.736 Mbps digital transport facility with a port on a frame relay switch. The Frame Relay Access Connection includes the Telephone Company facility between the customer designated premises and the customer's serving wire center, the interoffice transport (if applicable) between the customer's serving wire center and a wire center equipped with a frame relay switch, and the end user port. The end user port is a user-to-network interface which provides the lineside physical entry point into the Telephone Company frame relay network and permits FRAS compatible end user customer premises equipment (CPE) to originate or terminate an interstate access service. Connections between end user customer premises equipment and the Telephone Company frame relay switch are available at speeds of 56.0 kbps, 64.0 kbps, 1.544 Mbps or 44.736 Mbps. Each end user port requires the identification of a corresponding terminating port. All end user ports must be in conformance with American National Standards Institute (ANSI) standards T1.606-1990, T1.606 Addendum 1-1991, T1.606a-1992, T1.617, Annex D-1992.

The Frame Relay Inter-network Connection combines a frame relay compatible 1.544 Mbps or 44.736 Mbps digital transport facility with a port on a frame relay switch. The Frame Relay Inter-network Connection includes the Telephone Company facility between the customer designated premises and the customer's serving wire center, the interoffice transport (if applicable) between the customer's serving wire center and a wire center equipped with a frame relay switch, and the inter-network customer port. The inter-network customer port is a network-to-network interface which provides the trunkside physical entry point into the Telephone Company frame relay network. The inter-network customer port connects the Telephone Company frame relay switch and the access customer's network. The inter-network customer port is offered at speeds of 1.544 Mbps or 44.736 Mbps. All inter-network customer ports must be in conformance with Telcordia Technologies, Inc. Technical Reference TR-TSV-001370, Issued: May 1993.

The Telephone Company will provide the logical circuits required within its frame relay network to connect the ports or to connect a port with a DSL Access Service Connection Point. These logical circuits, or Permanent Virtual Connections (PVC), are software defined, end-to end, bi-directional communications paths that are established and dis-established via the access service order process. While no physical circuits are dedicated, the two network addresses (one from each port) are connected electronically to form a PVC.

16. Public Packet Data Network (Cont'd)

16.1 Frame Relay Access Service (Cont'd)

16.1.1 General (Cont'd)

(B) Service Description (Cont'd)

There are two types of PVCs available. The standard PVC establishes a communications path between two ports or between a port and a DSL Access Service Connection Point within the same Telephone Company frame relay network. The extended PVC establishes a communications path between two ports or between a port and a DSL Access Service Connection Point on two interconnected Telephone Company frame relay networks. A generic view of interconnected FRAS is shown in 16.1.2(A) following.

At the time service is ordered the number of PVCs will be identified along with their Committed Information Rates. CIR is the bit rate at which the FRAS network commits to transfer data. Committed Information Rates provide for frame relay switch throughput at designated speeds (See 17.6.7.1(F) following). This information is required for network routing purposes.

(C) Service Provided by More than One Telephone Company

When the transport facility between the customer designated premises and a wire center equipped with a frame relay switch is provided by more than one Telephone Company, the Telephone Companies involved will provide a Special Access Service facility as set forth in Section 7 preceding, and in accordance with Sections 2.4.7 and 5.3 preceding.

Jointly-Provided FRAS service includes: the End User Port, the Inter-network Customer Port, and Permanent Virtual Connections (PVC) which have associated Committed Information Rates (CIRs). A Special Access Service facility is used to connect to the frame relay switch.

Connections are provided via Channel Termination(s) and Channel Mileage (See Section 7 Special Access Digital Data and High Capacity Services preceding). All regulations, rates and charges as specified in Section 7 will apply in addition to the rates and charges associated with FRAS. A generic view of jointly-provided FRAS is shown in 16.1.2(A) following.

The Telephone Company that provides the frame relay switch will bill an End User Port charge for the end user port connection and/or an Inter-network Customer Port charge for the inter-network customer port connection.

The Special Access Service, End User Port and/or Inter-network Customer Port charge(s) will apply in lieu of the Frame Relay Access Connection or Frame Relay Inter-network Connection.

16. Public Packet Data Network (Cont'd)

16.1 Frame Relay Access Service (Cont'd)

16.1.1 General (Cont'd)

(D) Ordering Options and Conditions

Frame Relay Access Service is ordered under the Access Order provisions set forth in Section 5 preceding. Also included in that section are other charges which may be associated with ordering FRAS (e.g., Service Date Change Charges, Cancellation Charges, etc.)

A minimum of two FRAS connections are required for data to be transported between customer designated premises.

(E) Acceptance Testing

At no additional charge, the Telephone Company will, at the customer's request, cooperatively test at the time of installation.

16. Public Packet Data Network (Cont'd)

16.1 Frame Relay Access Service (Cont'd)

16.1.2 Rate Regulations

This section contains the specific regulations governing the rates and charges that apply for Frame Relay Access Service.

Frame Relay Access Service is available at the wire centers as identified in National Exchange Carrier Association, Inc. Tariff F.C.C. No. 4. In the case of Interconnected Frame Relay Access Service, National Exchange Carrier Association, Inc. Tariff F.C.C. No. 4 also identifies the intermediate and super intermediate wire centers.

(A) Rate Categories
The following diagrams depict a generic view of the components of Frame Relay Access Service and the manner in which the components are combined to provide FRAS and Interconnected FRAS and Jointly-Provided FRAS.

Customer's Serving Wire Center is equipped with a Frame Relay Switch

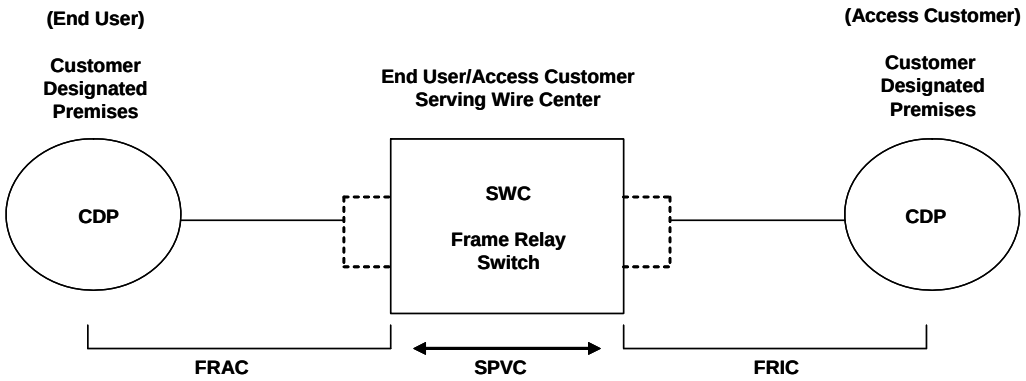

RATE ELEMENTS:
- **FRAC = Frame Relay Connection**
- **SPVC = Standard Permanent Virtual Connection**
- **FRIC = Frame Relay Inter-network Connection**

16. Public Packet Data Network (Cont'd)

16.1 Frame Relay Access Service (Cont'd)

16.1.2 Rate Regulations (Cont'd)

(A) Rate Categories (Cont'd)

Frame Relay Access Service
Customer's Serving Wire Center is not equipped with a frame relay switch.

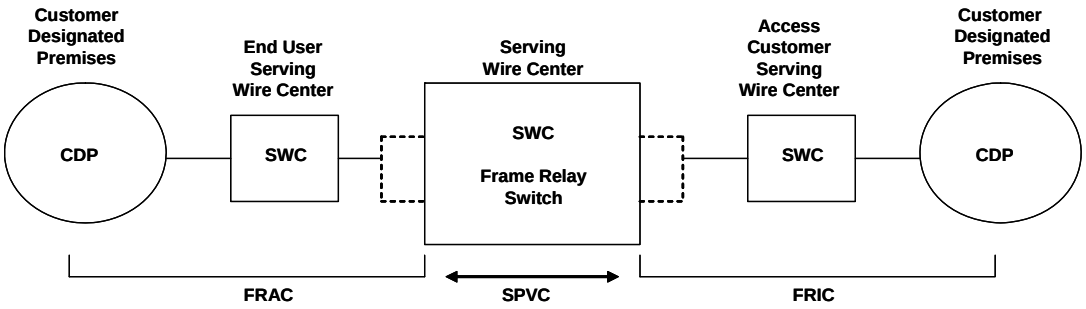

Interconnected Frame Relay Access Service

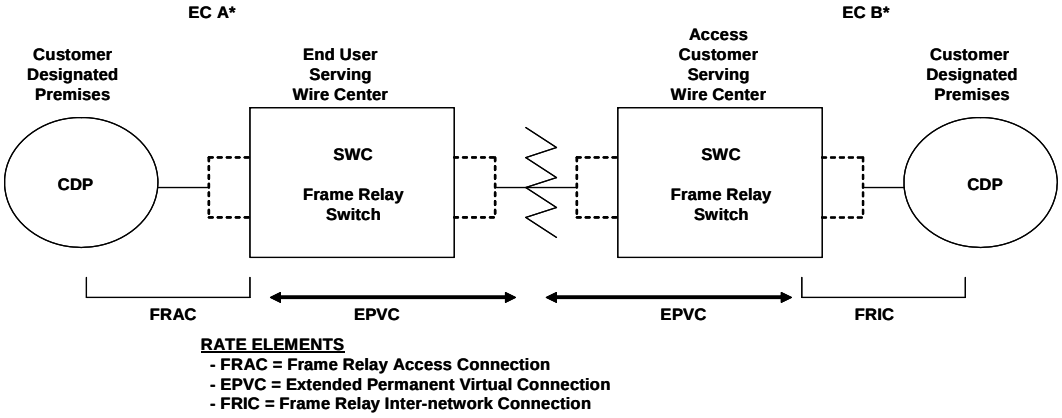

* If EC A or EC B is a non-TUECA company, the application of their charges will depend upon EC A or EC B's access tariff.

16. Public Packet Data Network (Cont'd)

16.1 Frame Relay Access Service (Cont'd)

16.1.2 Rate Regulations (Cont'd)

(A) Rate Categories (Cont'd)

Jointly-Provided Frame Relay Access Service

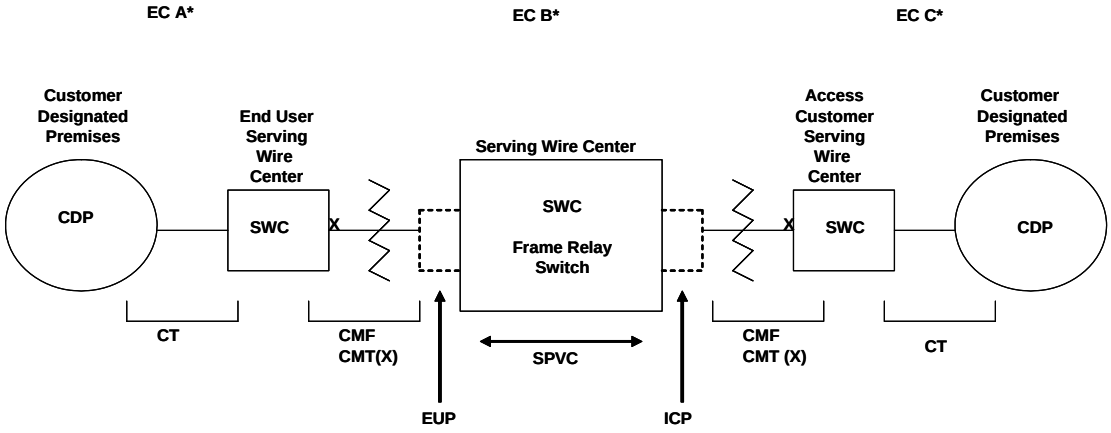

Rate Elements

(Special Access Service) (Frame Relay Access Service

EC "A" CT = Channel Termination
CMT = Channel Mileage Termination
CMF = Channel Mileage Facility

EC "B" CMF = Channel Mileage Facility
CMF = Channel Mileage Facility

EUP = End User Port
SPVC = Standard Permanent Virtual Connection
ICP = Inter-network Customer Port

EC "C" CT =Channel Termination
CMT = Channel Mileage Termination
CMF = Channel Mileage Facility

* If EC A or EC B is a non-TUECA company, the application of their charges will depend upon EC A and EC B's access tariff.

16. Public Packet Data Network (Cont'd)

16.1 Frame Relay Access Service (Cont'd)

16.1.2 Rate Regulations (Cont'd)

(A) Rate Categories (Cont'd)

(1) Frame Relay Access Connection

The Frame Relay Access Connection (FRAC) rate element recovers the costs associated with the communication path between the end user's premises and the Telephone Company wire center equipped with a frame relay switch. The FRAC includes the physical transmission facility between the customer designated premises and the customer's serving wire center, the interoffice transport (if applicable) between the customer's serving wire center and a wire center equipped with a frame relay switch, and the end user port on the Telephone Company's frame relay switch.

One FRAC charge applies per customer designated premises at which the FRAS connection is terminated. This applies even if the customer designated premises and the frame relay switch are collocated in a Telephone Company building.

(2) Frame Relay Inter-network Connection

The Frame Relay Inter-network Connection (FRIC) rate element recovers the costs associated with the communication path between the access customer's premises and the Telephone Company wire center equipped with a frame relay switch. The FRIC includes the physical transmission facility between the customer designated premises and the customer's serving wire center, the interoffice transport (if applicable) between the customer's serving wire center and a wire center equipped with a frame relay switch, and the inter-network customer port on the Telephone Company's frame relay switch.

One FRIC charge applies per customer designated premises at which the FRAS connection is terminated. This applies even if the customer designated premises and the frame relay switch are collocated in a Telephone Company building.

16. Public Packet Data Network (Cont'd)

16.1 Frame Relay Access Service (Cont'd)

16.1.2 Rate Regulations (Cont'd)

(A) Rate Categories (Cont'd)

(3) End User Port

An End User Port charge is applied as a discrete rate element in conjunction with jointly-provided Special Access Service. Refer to 7.8 and 7.9 preceding for additional applicable rates and charges.

The End User Port is the physical location in the Telephone Company switching office where the transport facility of the customer connects to the FRAS Network. It specifies how a frame relay switch sends and receives data from a frame relay end user customer's LAN or other compatible CPE devices.

The End User Port consists of either a 56.0 kbps, 64.0 kbps, 1.544 Mbps or 44.736 Mbps interface. The port connecting the transport facility to the Telephone Company frame relay switch must be ordered and provided at the same speed as the associated transport facility.

(4) Inter-network Customer Port

An Inter-network Customer Port Charge is applied as a discrete rate element in conjunction with jointly-provided Special Access Service. Refer to 7.9 preceding for additional applicable rates and charges.

The Inter-network Customer Port is the physical location in the Telephone Company switching office where the access customer's transport facility connects to the Telephone Company's FRAS network. It specifies how a frame relay switch sends and receives data from a frame relay access customer's network.

The Inter-network Customer Port is offered at speeds of 1.544 Mbps or 44.736 Mbps. The port connecting the transport facility to the Telephone Company frame relay switch must be ordered and provided at the same speed as the associated transport facility.

16. Public Packet Data Network (Cont'd)

16.1 Frame Relay Access Service (Cont'd)

16.1.2 Rate Regulations (Cont'd)

(A) Rate Categories (Cont'd)

(3) Permanent Virtual Connection (PVC)

A PVC is a software defined communications path between two port connections or between a port connection and a DSL Access Service Connection Point.

Each PVC is provisioned with a customer selected Committed Information Rate. The CIR is a transmission speed specified by the customer. CIRs range from 8 kbps to 768 kbps. The Telephone Company will provide switch capacity to permit the customer to transmit information with guaranteed delivery at the specified CIR. The Telephone Company will permit customers to attempt to transmit at speeds up to two times the CIR with no guarantee of completion. Attempted transmissions at above two times the CIR will not be permitted.

Customers will be permitted to order multiple PVCs on a given port subject to switch limitations. Customers anticipating non-simultaneous transmission may order CIRs assigned to these multiple PVCs, the sum of which may theoretically exceed the actual throughput of the port. However, when simultaneous transmission of multiple PVCs occurs, the total of the transmission rate (CIRs) may not exceed the actual throughput of the port.

There are two types of PVCs available. The standard PVC establishes a communications path between two ports or between a port and a DSL Access Service Connection Point within the same Telephone Company frame relay network. The extended PVC establishes a communications path between two ports or between a port and a DSL Access Service Connection Point on two interconnected Telephone Company frame relay networks.

16. Public Packet Data Network (Cont'd)

16.1 Frame Relay Access Service (Cont'd)

16.1.2 Rate Regulations (Cont'd)

(B) Types of Rates and Charges

There are two types of rates and charges. They are monthly rates and nonrecurring charges. The rates and charges are described as follows:

(1) Monthly Rates

Monthly rates are recurring rates that apply each month or fraction thereof that a FRAS is provided. For billing purposes, each month is considered to have 30 days.

(2) Nonrecurring Charges

Nonrecurring charges are one-time charges that apply for specific work activity (i.e., installation or change to an existing service). The types of nonrecurring charges that apply for FRAS are: installation of service and service rearrangements. These charges are in addition to the Access Order Charge as specified in 17.4.1 following:

(a) Installation of Service

Nonrecurring charges apply for the installation of Frame Relay Access Connections (FRAC), Frame Relay Inter-network Connections (FRIC), and Permanent Virtual Connections (PVC).

A nonrecurring charge applies per FRAC or FRIC installed and is based on the speed of the connection.

A nonrecurring charge applies per PVC installed.

16. Public Packet Data Network (Cont'd)

16.1 Frame Relay Access Service (Cont'd)

16.1.2 Rate Regulations (Cont'd)

(B) Types of Rates and Charges (Cont'd)

(2) Nonrecurring Charges (Cont'd)

(b) Service Rearrangements

Service Rearrangements are changes to existing (installed) services.

A PVC Rearrangement Charge will be applied whenever a change is made to the CIR of an existing PVC after initial port installation and/or a change is made to the terminating port destination of the PVC.

Administrative changes will be made without charge(s) to the customer. Administrative changes are as follows:

- Change of customer name,
- Change of customer or customer's end user premises address when the change of address is not a result of physical relocation of equipment,
- Change in billing data (name, address, or contact name or telephone number),
- Change of agency authorization,
- Change of customer circuit identification,
- Change of billing account number,
- Change of customer or customer's end user contact name or telephone number, and
- Change of jurisdiction.

(c) Moves

A move involves a change in the physical location of one of the following:

- The Point of Termination at the customer's premises
- The customer's premises

The charges for the move are dependent on whether the move is to a new location within the same building or to a different building.

16. Public Packet Data Network (Cont'd)

16.1 Frame Relay Access Service (Cont'd)

16.1.2 Rate Regulations (Cont'd)

(B) Types of Rates and Charges (Cont'd)

(2) Nonrecurring Charges (Cont'd)

(c) Moves

(i) Moves Within the Same Building

When the move is to a new location within the same building, the charge for the move will be an amount equal to one half of the nonrecurring (i.e., installation) charge for the service termination affected. There will be no change in the minimum period requirements. This charge is in addition to the Access Order Charge as specified in 17.3 following.

(ii) Moves To a Different Building

Moves to a different building will be treated as a discontinuance and start of service and all associated nonrecurring charges will apply. New minimum period requirements will be established for the new services. The customer will also remain responsible for satisfying all outstanding minimum period charges for the discontinued service.

(C) Minimum Period

The minimum period for FRAS is one month and the full monthly rate will apply to the first month. Adjustments for quantities of services established or discontinued in any billing period beyond the minimum period are as set forth in 2.4.1(F) preceding.

The minimum period for discounted FRAS is twelve months as set forth in 2.4.2 and 5.5.1 preceding.

16. Public Packet Data Network (Cont'd)

16.1 Frame Relay Access Service (Cont'd)

16.1.3 Optional Rate Plans

A Term Discount plan is available for Frame Relay Access Service (FRAS). The Term Discount applies to the Frame Relay Access Connection and Frame Relay Inter-network Connection charges. The Permanent Virtual Connections (PVC) are not eligible for a Term Discount. Under the Term Discount plan, the current monthly rates for eligible services are reduced by a fixed percentage. The amount of the discount percentage differs based on the length of the service commitment period selected by the customer. The Term Discount percentages for FRAS are as set forth in 17.6.7.1(E) following.

Discounts for the Term Discount plan are only applied to FRAS provided to a customer within the same state and LATA by the same Telephone Company.

The minimum service period on a month-to-month basis is one month. Under an Optional Rate Plan, the minimum service period is twelve months.

(A) Term Discounts

FRAS may be ordered at the customer's option on a month-to-month basis or for Term Discount periods of 36 months (3 years) or 60 months (5 years).

The minimum service period for all Term Discount plans is twelve months. The customer must specify the length of the service commitment period at the time the service is ordered.

For customers that subscribe to the Term Discount plan for 36 or 60 months, the Term Discount percentage as set forth in 17.6.7.1(E) following will be frozen from Company initiated decreases for the entire discount period at the percent in effect at the beginning of the Term Discount period.

If a Term Discount Percentage increase occurs during the term of an existing Term Discount plan, the increased percentage will be applied automatically to the remainder of the current Term Discount period.

At the end of the Term Discount period, the customer may convert to month-to-month service or subscribe to a new Term Discount plan. If the customer does not make a choice by the end of the discount period, the rates will automatically convert to month-to-month service rates.

To be included in a Term Discount plan, all eligible FRAS rate elements must be ordered for the same commitment term (i.e., all 36 months or all 60 months) and with the same service date. When additional capacity is subsequently added, it will be available only on a month-to-month basis unless the discount period of the entire service is upgraded.

16. Public Packet Data Network (Cont'd)

16.1 Frame Relay Access Service (Cont'd)

16.1.3. Optional Rate Plans

(A) Term Discounts (Cont'd)

Eligible FRAS rate elements are those provided to a customer within the same state and LATA by the same Telephone Company. As long as the number of FRAS connections included in a Term Discount plan remains constant, customer requests to install and disconnect FRAS connections, including changes affecting different wire centers and/or customer designated premises, will not change the current Term Discount period or the minimum service period, and Discontinuance of Service charges as set forth in (3) following will not apply.

(1) Upgrades in Term Discounts

Services provided under month-to-month rates or Term Discount rates may be upgraded to a Term Discount plan at any time without incurring FRAS nonrecurring charges or discontinuance charges for existing services. The new Term Discount plan must meet or exceed the service term of the plan being upgraded. For example, a service with a 36 month commitment period may be upgraded to a new 36 month or 60 month service period. The monthly rates will be those that are in effect at the time the service is upgraded. A new minimum service period applies to all FRAS that is upgraded.

(2) Upgrades in Capacity

If the customer chooses to upgrade a service under the Term Discount plan to a higher capacity (e.g., from 56.0 kbps to 64.0 kbps or from 56.0 kbps or 64.0 kbps to 1.544 Mbps), discontinuance charges will not apply, provided all the following conditions are met:

- the customer's order for the disconnect of the existing service and the installation of the new service are received at the same time and specifically reference the application of upgrade in capacity,
- the customer's disconnect order for the existing service must reference the service installation order,
- the new service has a total capacity greater than the total capacity of the service being discontinued and,
- the new Term Discount period meets or exceeds the Term Discount period being discontinued.

A new minimum service period applies to all upgrades. A Frame Relay Access Connection nonrecurring charge for an equivalent capacity of the existing services being upgraded to the higher speed service will not be assessed. FRAC nonrecurring charges will not apply to the upgraded lower speed services placed on the higher speed service if requested at the same time as the upgrade request. Nonrecurring charges will apply for capacity that exceeds the existing equivalent capacity.

16. Public Packet Data Network (Cont'd)

16.1 Frame Relay Access Service (Cont'd)

16.1.3 Optional Rate Plans

(A) Term Discounts (Cont'd)

(2) Upgrades in Capacity (Cont'd)

Discontinuance charges will not apply should the customer choose to upgrade either a portion of or the entire FRAS under the Term Discount plan and move the service to a new customer location(s) within the same state and LATA where service is provided by the same Telephone Company.

(3) Discontinuance of Service

If the customer chooses to disconnect all or a portion of the service prior to the expiration of the Term Discount period, discontinuance charges will apply to the portion of the service being discontinued.

Should the customer choose to discontinue a Term Discount plan prior to the completion of the minimum service period, discontinuance charges will apply. Discontinuance charges equal to one-hundred percent of the total undiscounted monthly rates, less any amounts previously paid, will apply for the minimum service period. Additionally, discontinuance charges of fifteen percent of the total undiscounted monthly charges will apply to the remaining portion of the discount service term.

Should the customer choose to discontinue service ordered under a Term Discount plan after the minimum service period but before the completion of the discount period, discontinuance charges will apply. Discontinuance charges of fifteen percent of the total undiscounted monthly charges will apply to the remaining portion of the discount period. For example, a customer has a 1.544 Mbps Frame Relay Access Connection which it chooses to discontinue after 33 months into a 60-month service term. The discontinuance charge would be 0.15 times 27 months times the undiscounted monthly rates for that service.

16. Public Packet Data Network (Continued)

16.2 Asynchronous Transfer Mode Cell Relay Access Service

16.2.1 General

Asynchronous Transfer Mode Cell Relay Access Service (ATM-CRS) is a connection-oriented transport service that is based on Asynchronous Transfer Mode (ATM) technology using fixed length, 53-byte cells. ATM cells generated by ATM-compatible customer premises equipment (CPE) are transmitted through the Telephone Company's ATM-CRS network to a pre-specified destination.

ATM-CRS provides customers requiring high-speed data transport for bandwidth intensive data, voice or video applications with the ability to interconnect multiple locations using the Telephone Company's ATM-CRS network. The customer may use ATM-CRS to interconnect its customer designated premises (CDPs) served by the Telephone Company's ATM-CRS network, to interconnect its local area network (LAN) to the Telephone Company's ATM-CRS network and/or interconnect its CDPs to an ATM network located outside of the Telephone Company's serving territory.

16.2.2 Service Description

ATM-CRS is provided using a combination of Ports, Virtual Paths and Virtual Circuit Channels. An ATM-CRS Port is required to provide the interface into the Telephone Company's ATM-CRS network. A Virtual Path is required to establish a transmission path between any two ATM-CRS Ports. Virtual Circuit Channels (VCCs) may be ordered from the Telephone Company to establish a communication path between any two CDPs or established by the customer using its own equipment.

Service is provided, where available, between CDPs and designated Telephone Company Serving Wire Centers (SWCs). ATM-CRS will be furnished where suitable facilities exist as determined by the Telephone Company. The Telephone Company will identify its ATM-CRS equipped Serving Wire Centers in the National Exchange Carriers Association, Inc. Tariff F.C.C. No. 4.

16. Public Packet Data Network (Continued)

16.2 Asynchronous Transfer Mode Cell Relay Access Service (Continued)

16.2.2 Service Description (Continued)

Rates and Charges for ATM-CRS are specified in Section 17.6.7.2, following. The application of rates and charges for ATM-CRS is described later in this section.

16.2.3 Obligation of the Customer

In addition to the regulations described in other sections of this tariff, the following provisions apply to ATM-CRS:

(A) The customer is responsible for providing the Telephone Company with the necessary information to provision ATM-CRS as specified in Section 5.2 Ordering Requirements, preceding.

(B) The customer is responsible for providing and maintaining all required customer premises equipment (CPE), which is compatible with ATM-CRS and complies with the standards specified in the following publications: The ATM Forum Technical Committee ATM User-Network Interface (UNI) Signaling Specification (Version 4.0), Private Network-Network Interface Specification (Version 1.0) and BISDN Inter Carrier Interface (B-ICI) Specification (Version 2.0). A customer ordering Ethernet-based ATM-CRS Ports is also responsible for ensuring that its CPE complies with the standards specified in Technical Reference IEEE Std. 802.3, Part 3, Clause 15 for 10Base-F, Clause 26 for 100Base-F and Clause 34 through 38 for 1000Base-X connections.

16.2.4 Rate Regulations

This section contains the regulations governing the rates and charges that apply for ATM-CRS. Regulations governing the rates and charges for Special and/or ADSL Access Services provided under this tariff used in conjunction with ATM-CRS are as specified in Sections 7 and 8, preceding.

16. Public Packet Data Network (Continued)

16.2 Asynchronous Transfer Mode Cell Relay Access Service (Continued)

16.2.4 Rate Regulations (Continued)

The following diagrams depict generic views of the components of ATM-CRS. In the first figure, all of the customer's CDPs are served by the ATM-CRS equipped SWCs.

The ATM-CRS customer orders the applicable ATM-CRS components pursuant to the provisions specified in this section and the applicable Special Access Service Components pursuant to the provisions specified in Section 7, preceding.

Figure 1

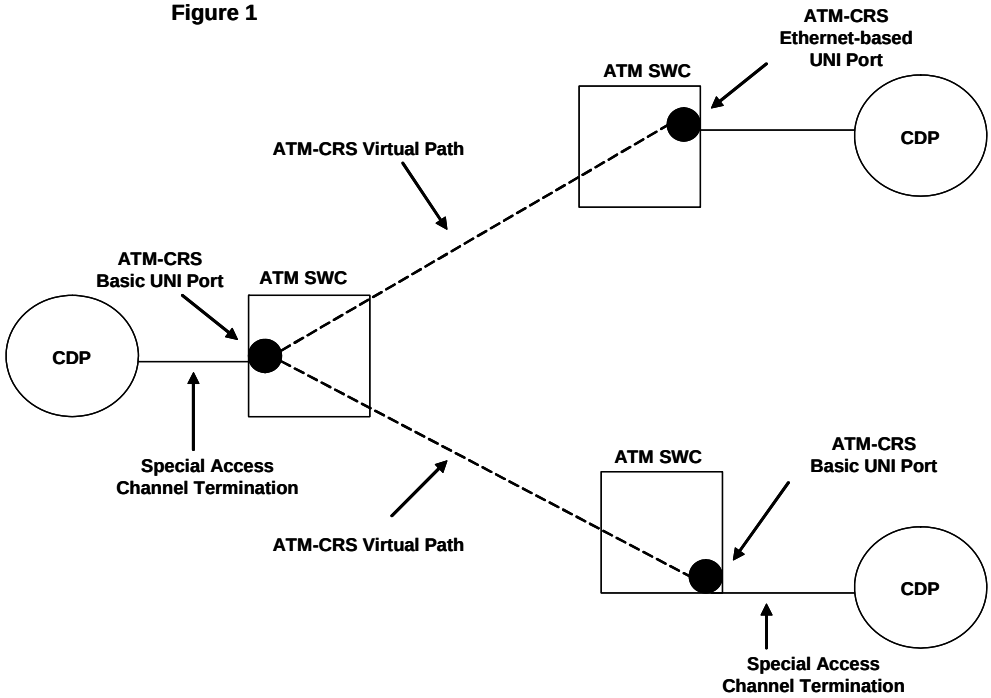

16. Public Packet Data Network (Continued)

16.2 Asynchronous Transfer Mode Cell Relay Access Service (Continued)

16.2.4 Rate Regulations (Continued)

In the second figure, one of the customer's CDPs is not served by an ATM-CRS equipped SWC. The ATM-CRS customer orders the applicable ATM-CRS components pursuant to the provisions specified in this section and the applicable Special Access Service components pursuant to the provisions specified in Section 7, preceding.

Figure 2

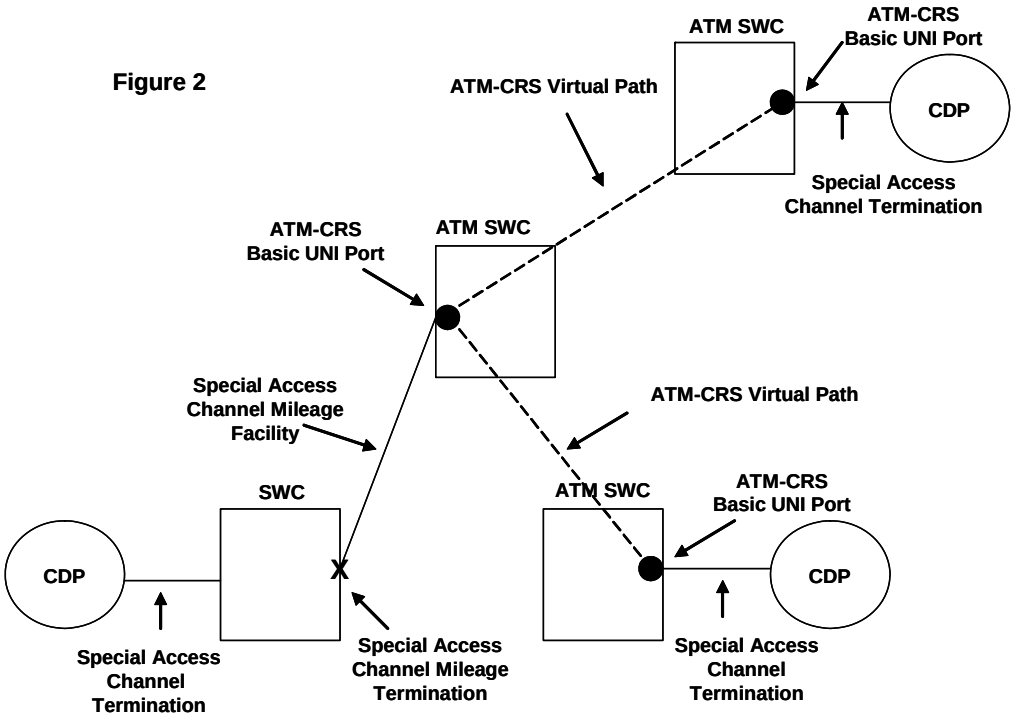

16. Public Packet Data Network (Continued)

16.2 Asynchronous Transfer Mode Cell Relay Access Service (Continued)

16.2.4 Rate Regulations (Continued)

In the third figure, one of the customer's CDPs is served by another telephone company's ATM network. The ATM-CRS customer orders the applicable ATM-CRS components from the Telephone Company pursuant to the provisions specified in this section and the applicable Special Access Service Components pursuant to the provisions specified in Section 7, preceding. In addition, the customer will order the applicable ATM and Special Access Services components from the distant telephone company.

Figure 3

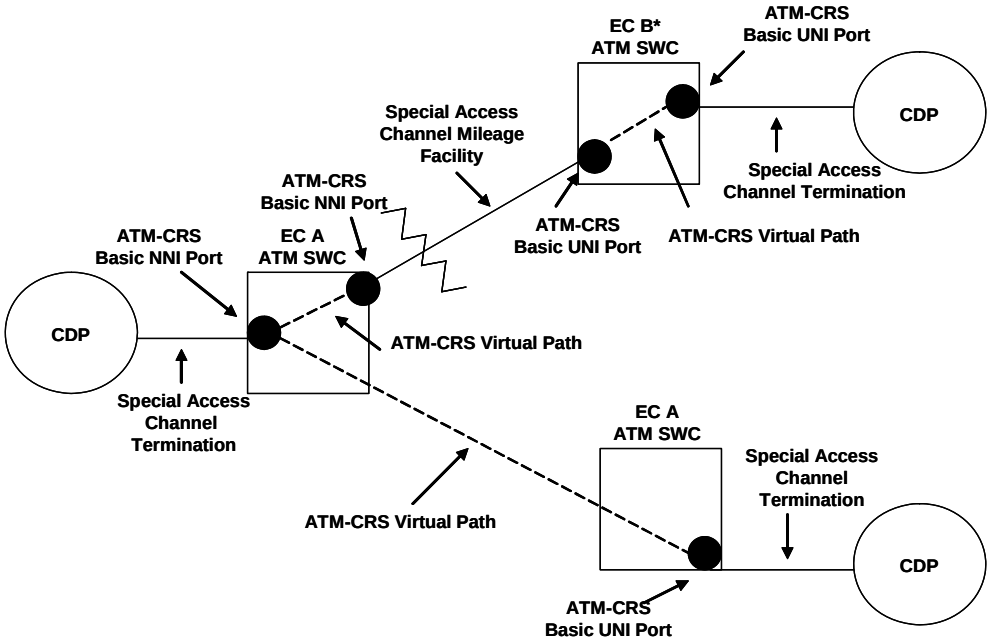

* If EC B is a non-NECA company, the application of charges will depend on its access tariff.

16. Public Packet Data Network (Continued)

16.2 Asynchronous Transfer Mode Cell Relay Access Service (Continued)

16.2.4 Rate Regulations (Continued)

(A) Rate Categories

The various ATM-CRS service components are described below.

(1) ATM-CRS Ports

An ATM-CRS Port receives ATM cells from the customer's ATM-compatible CPE, validates the addressing parameters contained in the cell headers, and transmits the cells into the ATM-CRS network. The ATM-CRS Port also receives ATM cells from the Telephone Company's ATM-CRS network or from an ATM network located outside of the Telephone Company's serving territory, validates the addressing parameters contained in the cell headers, and transmits the cells to the pre-designated CDP.

ATM-CRS Ports are available with a User Network Interface (UNI) or a Network to Network Interface (NNI) as described below. Each ATM-CRS Port must be associated with a minimum of one ATM-CRS Virtual Path or DSL Access Service Connection optional function.

Interconnection of the Telephone Company's ATM-CRS network to another ATM network located outside the Telephone Company's serving territory is provided using ATM-CRS Basic NNI ports and Telephone Company provided Special Access Services.

(a) Basic User Network Interface (UNI) Port

Basic UNI Ports provide a port only interface to the Telephone Company's ATM-CRS network and do not include the required transport facility between the CDP and the Telephone Company's SWC at which the basic UNI Port is located. Transport to connect the CDP with the basic UNI Port is provided using Telephone Company DS1 or DS3 High Capacity and/or Synchronous Optical Channel Special Access Services as described in Sections 7.10 and 7.11, preceding. Basic UNI Ports are available at bandwidth speeds of 1.544 Mbps, 44.736 Mbps, 155.52 Mbps and 622.08 Mbps.

16. Public Packet Data Network (Continued)

16.2 Asynchronous Transfer Mode Cell Relay Access Service (Continued)

16.2.4 Rate Regulations (Continued)

(A) Rate Categories (Continued)

(b) Ethernet-based User Network Interface (UNI) Port

Ethernet-based UNI Ports are used to interconnect the customer's Ethernet-compatible CPE with the Telephone Company's ATM-CRS network and include the transport facility between the CDP and the Telephone Company's SWC, provided that the CDP is served by the SWC in which the Ethernet-based UNI Port is located. Ethernet-based UNI Ports are available at bandwidth speeds of up to 10 Mbps (i.e., 10Base-F), up to 100 Mbps (i.e., 100Base-F) and up to 1 Gbps (i.e., 1000Base-X).

(c) Basic Network to Network Interface (NNI) Port

Basic NNI Ports provide a port only interface to the Telephone Company's ATM-CRS network and do not include the required transport facility between the CDP and the Telephone Company's SWC at which the NNI is located. Transport to connect the CDP with the basic NNI Port is provided using Telephone Company provided DS1 or DS3 High Capacity and/or Synchronous Optical Channel Special Access Services described in Sections 7.10 and 7.11, preceding. Basic NNI Ports are available at bandwidth speeds of 1.544 Mbps, 44.736 Mbps, 155.52 Mbps , 622.08 Mbps, and 2.4 Gbts.

(d) Ethernet-based Network to Network Interface (NNI) Port

Ethernet-based NNI Ports are used to interconnect the customer's Ethernet-compatible CPE with the Telephone Company's ATM-CRS network and include a fiber only connection between the CDP and the Telephone Company's SWC, provided that the CDP is served by the SWC in which the Ethernet-based NNI Port is located. Ethernet-based NNI Ports are available at bandwidth speeds of up to 10 Mbps (i.e., 10Base-F), up to 100 Mbps (i.e., 100Base-F) and up to 1 Gbps (i.e., 1000Base-X).

Monthly and nonrecurring charges apply for each ATM-CRS Port ordered.

16. Public Packet Data Network (Continued)

16.2 Asynchronous Transfer Mode Cell Relay Access Service (Continued)

16.2.4 Rate Regulations (Continued)

(A) Rate Categories (Continued)

(2) ATM-CRS Virtual Paths

An ATM-CRS Virtual Path (VP) is a predefined, logical circuit established by the Telephone Company that is required to route ATM cells between any two ATM-CRS Ports located within the Telephone Company's ATM-CRS Network. VPs maybe established between two ATM-CRS UNI Ports, between an ATM-CRS UNI Port and an ATM-CRS NNI Port, or between two ATM-CRS NNI Ports. VPs are available in increments of 1.5 Mbps.

The bandwidth capacity on a VP may not exceed the maximum bandwidth of the associated ATM-CRS Ports. In addition to specifying the bandwidth capacity required on its order, the customer must specify one of the following traffic routing prioritization parameters for each VP ordered.

(a) Constant Bit Rate (CBR)

CBR supports applications that require special network timing and minimal delay to ensure steady data flow of user information through the ATM-CRS network. Examples of applications requiring CBR include voice, some types of video and circuit emulation for higher speed special access services. CBR is the highest priority traffic on the network.

(b) Variable Bit Rate- real time (VBR-rt)

VBR-rt supports applications for which the data flow is bursty and requires low delay variance in ATM cell transmissions. Examples of applications requiring VBR-rt include voice and video.

(c) Variable Bit Rate- non real time (VBR-nrt)

VBR-nrt supports applications for which the data flow is bursty and variable delays in ATM cell transmissions can be tolerated. Examples of applications requiring VBR-nrt include file transfer, multimedia and computer aided design/computer aided manufacturing (CAD/CAM).

16. Public Packet Data Network (Continued)

16.2 Asynchronous Transfer Mode Cell Relay Access Service (Continued)

16.2.4 Rate Regulations (Continued)

(A) Rate Categories (Continued)

(2) ATM-CRS Virtual Paths (Continued)

(d) Unspecified Bit Rate (UBR)

UBR supports applications for which the data flow is bursty and delay tolerant using "best effort" engineering. The Telephone Company will attempt to deliver all ATM cells received on a UBR VP, however, network congestion may result in a loss of ATM cells. Examples of applications requiring UBR include interactive data sessions, file transfers, monitoring and signaling.

Monthly and nonrecurring charges apply for each VP ordered. The monthly recurring charge is comprised of a fixed path charge and a variable bandwidth capacity charge, which is calculated based on the total bandwidth of the VP. For example, the monthly charge for a single 145 Mbps VBR-rt path would equal $2,542.50 ($5.00 fixed plus $17.50 per Megabit).

(3) ATM-CRS Virtual Circuit Channels (VCCs)

An ATM-CRS Virtual Circuit Channel (VCC) is a pre-defined logical circuit used to route ATM cells between any two CDPs served by the Telephone Company's ATM-CRS network. VCCs may be established by the customer using its CPE or by the Telephone Company in its ATM-CRS network via the service order process.

Monthly and nonrecurring charges apply for each VCC ordered by the customer. Rates and charges specified in Section 17.6.7.2 (3), following, do not apply to VCCs established by the customer.

16. Public Packet Data Network (Continued)

16.2 Asynchronous Transfer Mode Cell Relay Access Service (Continued)

16.2.4 Rate Regulations (Continued)

(A) Rate Categories (Continued)

(4) Optional Features and Functions

(a) DSL Access Service Connection

Where available, ATM-CRS UNI and/or NNI Ports may be equipped with the DSL Access Service Connection functions. This function provides for the interconnection of the ATM-CRS with Telephone Company provided ADSL Access Service as described in Technical Reference ANSI T1.413-1998. This optional function allows the ATM-CRS customer to receive ADSL data traffic from and transmit ADSL data traffic to its end user customers using UBR traffic routing prioritization parameter.

It is available only at Telephone Company designated DSL Access Service Connection Point SWCs located within the Telephone Company's serving territory. The speed of the DSL Access Service Connection function ordered by the customer may not exceed the speed of the associated ATM-CRS Port.

A nonrecurring charge applies per port to equip the ATM-CRS UNI or NNI Port with the DSL Access Service Connection function.

(i) A customer that requires a VBR-nrt traffic routing prioritization parameter may also order a DSL VCC between its CDP and the premises of its end user customer. Each DSL VCC is available with a maximum bandwidth capacity of 1.5 Mbps, however, the maximum speed to or from the ADSL Access Service customer will not exceed the maximum peak speeds for the services. Monthly and nonrecurring charges apply to each DSL VCC established by the Telephone Company. The DSL VCC charges apply in addition to the nonrecurring charge for equipping the ATM-CRS UNI or NNI Port with the DSL Access Service Connection function.

16. Public Packet Data Network (Continued)

16.2 Asynchronous Transfer Mode Cell Relay Access Service (Continued)

16.2.4 Rate Regulations (Continued)

(A) Rate Categories (Continued)

(4) Optional Features and Functions (Continued)

(a) DSL Access Service Connection (Continued)

(ii) Where suitable facilities exist, a customer that requires the ability to send high speed multimedia transmission may also order a MultiMedia VCC (MM-VCC) between its CDP and the premises of its end user customer, provided such end user customer's premises is equipped with ADSL Access Service. The MM-VCC is available in increments of 1 Mbps, or 4 Mbps up to a maximum of 16 Mbps. The customer is responsible for specifying in its order the premises locations and the capacity of each MM-VCC. Transmission speed across the MM-VCC is not guaranteed and may be affected by factors that affect the actual speeds delivered, including the ADSL Access Service customer's distance from the Telephone Company Serving Wire Center, condition of the facilities, and any capacity limitations in the ATM-CRS customer's network design. Monthly and nonrecurring charges apply to each MM-VCC established by the Telephone Company. The MM-VCC charges apply in addtiion to the nonrecurring charge for equipping the ATM-CRS UNI or NNI Port with the DSL Access Service Connection function.

16. Public Packet Data Network (Continued)

16.2 Asynchronous Transfer Mode Cell Relay Access Service (Continued)

16.2.4 Rate Regulations (Continued)

(B) Types of Rates and Charges

There are two types of rates and charges. They are monthly rates and nonrecurring charges. The rates and charges are described below:

(1) Monthly Rates

Monthly rates are recurring rates that apply each month or fraction thereof that an ATM-CRS service component is provided. For billing purposes, each month is considered to have 30 days.

(2) Nonrecurring Charges

Nonrecurring charges are one-time charges that apply for specific work activity (i.e., installation or change to an existing service). The types of nonrecurring charges that apply for ATM-CRS are installation of service and service rearrangements. These charges are in addition to the Access Order Charge as specified in Section 17.3, following.

(a) Installation of Service

Nonrecurring charges apply for installation of Ports, VPs, VCCs and Optional Features and Functions ordered by the customer.

(b) Service Rearrangements

Service rearrangements are changes to existing (i.e., installed) services, which may be administrative only in nature as set forth below or, that involve actual physical change to the service.

The VP nonrecurring charge will apply per VP to change bandwidth capacity and/or to change the traffic route prioritization parameter on an existing VP.

16. Public Packet Data Network (Continued)

16.2 Asynchronous Transfer Mode Cell Relay Access Service (Continued)

16.2.4 Rate Regulations (Continued)

(B) Types of Rates and Charges

(2) Nonrecurring Charges (Continued)

(b) Service Rearrangements (Continued)

Administrative changes will be made without charge(s) to the customer. Administrative changes are as follows:

- Change of customer name
- Change of customer or customer's end user premises address when the change of address is not a result of the physical relocation of equipment
- Change in billing data (name, address, or contact name or telephone number),
- Change in agency authorization,
- Change of customer circuit identification
- Change of billing account number,
- Change of customer or customer's end user contact name or telephone number, and
- Change of jurisdiction

(c) Moves

A move involves a change in the physical location of one or more of the following:

- The Point of Termination at the customer's premises
- The customer's premises

The charges for moving ATM-CRS service components are dependent on whether the move is to a different location within the same building, to a different building within the same SWC, or to a different building in different SWC. The charges specified below apply in addition to any applicable charges for moving the associated Special Access Services as specified in Section 7, preceding.

16. Public Packet Data Network (Continued)

16.2 Asynchronous Transfer Mode Cell Relay Access Service (Continued)

16.2.4 Rate Regulations (Continued)

(B) Types of Rates and Charges

(2) Nonrecurring Charges (Continued)

(c) Moves

(i) Moves Within the Same Building

Port only interfaces (i.e., Basic UNI/NNI Ports), VPs and VCCs are not impacted when a customer moves its Point of Termination to a different location within the same building. The charge for moving an Ethernet-based UNI or Ethernet-based NNI Port within the same building will be an amount equal to one half of the nonrecurring (i.e., installation) charge for the port. There will be no change in the minimum period requirements.

(ii) Moves To a Different Building Within the Same SWC

Port only interfaces (i.e., Basic UNI/NNI Ports), VPs and VCCs are not impacted when a customer moves its Point of Termination to a different building within the same SWC. The move of an Ethernet-based UNI or Ethernet-based NNI Port will be treated as a discontinuance and start of service. Associated nonrecurring (i.e., installation) charges will apply. New minimum period requirements will be established for the new services. The customer will also remain responsible for satisfying all outstanding minimum period charges for the discontinued service.

(iii) Moves to a Different Building in a Different SWC

A move to a different building in a different SWC will be treated as a discontinuance and start of service of all associated ATM-CRS service components. Associated nonrecurring (i.e., installation) charges will apply. New minimum period requirements will be established for the new services. The customer will also remain responsible for satisfying all outstanding minimum period charges for discontinued service.

16. Public Packet Data Network (Continued)

16.2 Asynchronous Transfer Mode Cell Relay Access Service (Continued)

16.2.4 Rate Regulations (Continued)

(C) Minimum Periods

The minimum period for ATM-CRS service components provided to a customer and for which charges are applicable are:

- Twelve months for ATM-CRS Ports
- One month for ATM-CRS Virtual Paths and Virtual Circuit Channels

17. Rates and Charges

17.1 Common Line Access Service, Federal Universal Service Charge, ISDN Line Ports and DS1 Line Port

17.1.1 End User Access Service

	Rate Per Month
(A) End User Common Line (EUCL) –	
Platteville	
Residence, Single Line Business	
- Individual line or trunk, each	$6.50
Non Primary Residence, ISDN BRI	
- Individual line or trunk, each	$6.50
Multi-Line Business, ISDN PRI, Centrex	
- Individual line or trunk, each	$9.00
Midwest Kendall	
Residence, Single Line Business	
- Individual line or trunk, each	$6.50
Non Primary Residence, ISDN BRI	
- Individual line or trunk, each	$6.50
Multi-Line Business, ISDN PRI, Centrex	
- Individual line or trunk, each	$8.57
Thorp	
Residence, Single Line Business	
- Individual line or trunk, each	$6.50
Non Primary Residence, ISDN BRI	
- Individual line or trunk, each	$6.50
Multi-Line Business, ISDN PRI, Centrex	
- Individual line or trunk, each	$8.94
All Other Companies	
Residence, Single Line Business	
- Individual line or trunk, each	$6.50
Non Primary Residence, ISDN BRI	
- Individual line or trunk, each	$6.50
Multi-Line Business, ISDN PRI, Centrex	
- Individual line or trunk, each	$8.95

17. Rates and Charges

17.1 Common Line Access Service, Federal Universal Service Charge, ISDN Line Ports and DS1 Line Port (Cont'd)

17.1.2 Federal Universal Service Charge (FUSC)

Regulations concerning the Federal Universal Service Charge are set forth in Section 3.9 preceding.

	Percentage
(A) FUSC Surcharge Factor	15.5%

17.1.3 ISDN Line Ports	Monthly Rate
(A) ISDN BRI Line Port	
- per arrangement	$2.23
(B) ISDN PRI Line Port	
- per arrangement	$23.51

17.1.4 DS1 Line Port

(A) DS1 Line Port	
- per DS1 (1.544 Mbps) channel service	$23.51

17.1.5 Access Ordering

Regulations concerning Access Ordering are set forth in Section 5. preceding.

	USOC	Charge	Tariff Reference
(A) Access Order Charge			
- Per order	AOC	$75.00	5.4.1
(B) Miscellaneous Service Order Charge			
- Per occurrence	MSOC	$50.00	5.4.2
(C) Service Date Change Charge			
- Per order, per occurrence	SDCC	$50.00	5.4.3
(D) Design Change Charge			
- Per order, per occurrence	DCC	$50.00	5.4.3

17. Rates and Charges (Cont'd)

17.4 Switched Access Service
Regulations concerning Switched Access are set forth in Section 6 preceding.

17.4.1 Nonrecurring Charges

	USOC	Nonrecurring Charge	Tariff Reference
(A) Local Transport Installation			
Per Entrance Facility			6.4.1(B)(1)
- Voice Grade Two-Wire	NEFT2	$56.00	
- Voice Grade Four-Wire	NEFT4	$56.00	
- High Capacity DS1	NEFD1	$400.00	
- High Capacity DS3	NEFD3	$750.00	
(B) Trunk Activation			
- Per 24 Trunks Activated or Fraction thereof on a Per Order basis	NDTTA	$418.00	6.4.1(B)(1)
(C) FGC and FGD Trunk Conversion			
Multifrequency Address Signaling to SS7 Signaling or SS7 Signaling to Multifrequency Address Signaling			
- Per 24 Trunks Converted or Fraction thereof on a Per Order Basis	SS7TC	$210.00	6.4.1(B)(3)
(D) Reserved For Future Use			
(E) Common Channel Signaling Network Connection			
- Per Signaling Entrance Facility			
DS0	NCSEF	$56.00	
DS1	NC1EF	$400.00	

17. Rates and Charges (Cont'd)

17.4 Switched Access Service

17.4.2 Local Transport

(A) Premium Access

	USOC	Monthly Rate	Tariff Reference
(1) Entrance Facility			
Per Termination			6.1.3(A)(1)
- Voice Grade Two-Wire	EFT2	$11.80	
- Voice Grade Four-Wire	EFT4	$17.65	
- High Capacity DS1	EFDS1	$51.42	
- High Capacity DS3	EFDS3	$514.13	
Per Mile, Over 3 Miles			
- High Capacity DS1		N/A	
- High Capacity DS3		N/A	
(2) Direct Trunked Transport			6.1.3(A)(2)
Direct Trunked Facility			
Per Mile			
- Voice Grade	DVCMF	$0.05	
- High Capacity DS1	D1CMF	$1.48	
- High Capacity DS3	D3CMF	$14.71	
Direct Trunked Termination			
Per Termination			
- Voice Grade	DVCMT	$0.56	
- High Capacity DS1	D1CMT	$0.45	
- High Capacity DS3	D3CMT	$36.75	

17. Rates and Charges (Cont'd)

17.4 Switched Access Service

17.4.2 Local Transport (Cont'd)

	USOC	Monthly Rate	Tariff Reference
(A) Premium Access (Cont'd)			
(3) Tandem Switched Transport			6.1.3(A)(3)
Tandem Switched Facility			
- Per Access Minute Per Mile	LTF	$0.000012	
Tandem Switched Termination			
- Per Access Minute Per Termination	LTT	$0.000011	
Tandem Switching			
- Per Access Minute Per Tandem	LTTAN	$0.006756	
(4) Residual Interconnection Charge			6.1.3(A)(4)
Per Access Minute	LTRIC	N/A	
(5) Multiplexing			6.1.3(A)(5)
Per Arrangement			
DS3 to DS1	MUX31	$226.25	
DS1 to Voice	MUX10	$176.00	
DS1 to DS0	MUX10	$176.00	
(B) Non-Premium Access			
(1) Residual Interconnection Charge			
- Per Access Minute	LTRIC	N/A	6.1.3(A)(4)
(C) Network Blocking (Applies to FGD only)			
- Per Blocked Call	NBCPC	$0.0076	6.8.6

17. Rates and Charges (Cont'd)

17.4 Switched Access Service

17.4.2 Local Transport (Cont'd)

(D) Common Channel Signaling Network Connection

	USOC	Monthly Rate	Tariff Reference
(1) Signaling Network Access Link			6.10.3
Signaling Mileage Facility			
Per Mile			
DS0	CCCMF	$0.05	
DS1	C1CMF	$2.00	
Signaling Mileage Termination			
Per Termination			
DS0	CCCMT	$0.80	
DS1	C1CMT	$3.50	
Signaling Entrance Facility			
Per Facility			
DS0	CCSEF	$14.75	
DS1	C1SEF	$70.00	
Per Mile, Over 3 Miles			
DS1	CSEFPM	N/A	
(2) STP Port			
Per Port	STPPT	$605.07	
(E) 800 Data Base Access Service Queries			6.10.3
Per Query			
Basic	800B	$0.006723	
Vertical Feature	800V	$0.006723	

17. Rates and Charges (Cont'd)

17.4 Switched Access Service

17.4.2 Local Transport (Cont'd)

(F) Dedicated Trunk Port

	Access Tandem Dedicated Trunk Port Voiceband Monthly Rate, Per Channel	Access Tandem Dedicated Trunk Port DS1 Monthly Rate, Per Channel
Each	$16.77	$7.89

(G) Shared Multiplexing DS3-DS1

	Per Minute Rate
Shared Multiplexing Per Access Minute	$0.000009

17. Rates and Charges (Cont'd)

17.4 Switched Access Service (Cont'd)

17.4.3 End Office

		USOC	Monthly Rate	Tariff Reference
(A)	Local Switching			
	(1) Premium			
	Local Switching 1 - Feature Groups A & B (except: (1) Feature Group B utilized for the provision of MTS/WATS service and (2) Feature Groups A and B when utilized for the provision of terminating inward WATS and WATS-type services at an equal access WATS Serving Office.)			
	- Per Access Minute	EOLS1	$0.005011	6.1.3(B)(1)
	Local Switching 2 - Feature Groups C & D (including: (1) Feature Group B when utilized for the provision of MTS/WATS service and (2) Feature Groups A and B when utilized for the provision of terminating inward WATS and WATS-type services at an equal access WATS Serving Office.)			
	- Per Access Minute	EOLS2	$0.005011	6.1.3(B)(1)
	(2) Non-Premium Per Access Minute	EOLS1	$0.002255	6.1.3(B)(1)
(B)	Information Surcharge			6.4.5
	Premium Per 100 Access Minutes	EOINFO	$0.000000	
	Non-Premium Per 100 Access Minutes	EOINFO	$0.000000	

(C) Shared Trunk Port

	Per Access Minute
Each	$.001997

(D) Dedicated Trunk Port

	Per Month
DS1 Port, per channel	$0.12
Voice Grade Port, per channel	$2.47

17. Rates and Charges (Cont'd)

17.4 Switched Access Service (Cont'd)

17.4.4 Assumed Minutes of Use

		Assumed Minutes of Use per Month per Line or Trunk	Tariff Reference
(A)	Feature Group A, Two Way Calling (1902 Originating, 1694 Terminating)	3596	6.5.4
(B)	Feature Group A, Originating Only	1902	6.5.4
(C)	Feature Group A, Terminating Only	1694	6.5.4
(D)	Feature Group B, Two Way Calling (4500 Originating, 4500 Terminating)	9000	6.6.4
(E)	Feature Group B, Originating Only	4500	6.6.4
(F)	Feature Group B, Terminating Only	4500	6.6.4

17.4.5 Carrier Identification Parameter (CIP)

Non-Recurring Charge-Per CIC, Per End Office Direct Trunk Group	Non-Recurring Charge-Per CIC, Per Access Tandem Direct Trunk Group	Monthly Recurring Charge Per Channel
$80.00	$1,120.00	$.46

17.4.6 Reserved For Future Use

17. Rates and Charges (Cont'd)

17.5 Special Access Service

Regulations concerning Special Access Service are set forth in Section 7 preceding.

17.5.1 Nonrecurring Charges

	USOC	Nonrecurring Charge	Tariff Reference
(A) Metallic Service			
(1) Installation	NMTCT	$56.00	7.4
(B) Telegraph Grade Service			7.5
(1) Installation			
Two-Wire	NTCT2	$56.00	
Four-Wire	NTCT4	$56.00	
(C) Voice Grade Service			7.6
(1) Installation			
Two-Wire	NVCT2	$56.00	
Four-Wire	NVCT4	$56.00	
(2) Conditioning	NVGCC	$184.00	
(3) Improved Return Loss			
Two-Wire	NIRL2	$37.00	
Four-Wire	NIRL4	$74.00	
(D) Program Audio Service			7.7
(1) Installation			
200 to 3500 Hz	NPECT	$112.00	
100 to 8000 Hz	NPFCT	$112.00	
50 to 15000 Hz	NPJCT	$112.00	
(2) Conditioning	NPAGC	$73.00	
(3) Stereo	NPASTE	$110.00	

17. Rates and Charges (Cont'd)

17.5 Special Access Service (Cont'd)

17.5.1 Nonrecurring Charges (Cont'd)

	USOC	Nonrecurring Charge	Tariff Reference
(E) Digital Data Service			7.8
(1) Installation			
2.4 kbps	NXACT	$150.00	
4.8 kbps	NXBCT	$150.00	
9.6 kbps	NXGCT	$150.00	
19.2 kbps	NXECT	$150.00	
56.0 kbps	NXHCT	$150.00	
64.0 kbps	NXJCT	$150.00	
(F) High Capacity Service			7.9
(1) Installation			
DS1	NHCCT	$397.93	
DS3	NH3CT	$750.00	

17. Rates and Charges (Cont'd)

17.5 Special Access Service (Cont'd)

17.5.2 Surcharge for Special Access Service

	USOC	Monthly Rate	Tariff Reference
Special Access Surcharge Per Voice Grade Equivalent	S25	$25.00	7.3

17. Rates and Charges (Cont'd)

17.5 Special Access Service (Cont'd)

17.5.3 Metallic Service

Regulations concerning Metallic Service are set forth in 7.4 preceding.

	USOC	Monthly Rate
(A) Channel Termination		
Per Termination		
Two-Wire	MTCT2	$42.36
(B) Channel Mileage		
(1) Channel Mileage Facility		
Per Mile	MTCMF	$0.36
(2) Channel Mileage Termination		
Per Termination	MTCMT	$8.98
(C) Optional Features and Functions		
(1) Bridging		
(a) Three Premises Bridging		
Per Port	M3PB	$6.29
(b) Series Bridging		
Per Port	MSB	$6.29

17. Rates and Charges (Cont'd)

17.5 Special Access Service (Cont'd)

17.5.4 Telegraph Grade Service

Regulations concerning Telegraph Grade Service are set forth in 7.5 preceding.

	USOC	Monthly Rate
(A) Channel Termination		
Per Termination		
Two-Wire	TGCT2	$16.35
Four-Wire	TGCT4	$24.50
(B) Channel Mileage		
(1) Channel Mileage Facility		
Per Mile	TGCMF	$0.05
(2) Channel Mileage Termination		
Per Termination	TGCMT	$1.05
(C) Optional Features and Functions		
(1) Telegraph Bridging		
Per Port		
Two-Wire	TGB2W	$6.29
Four-Wire	TGB4W	$13.70

17. Rates and Charges (Cont'd)

17.5 Special Access Service (Cont'd)

17.5.5 Voice Grade Service

Regulations concerning Voice Grade Service are set forth in 7.6 preceding.

	USOC	Monthly Rate
(A) Channel Termination		
Per Termination		
Two-Wire	VGCT2	$11.80
Four-Wire	VGCT4	$17.65
(B) Channel Mileage		
(1) Channel Mileage Facility		
Per Mile	VGCMF	$0.05
(2) Channel Mileage Termination		
Per Termination	VGCMT	$0.80
(C) Optional Features and Functions		
(1) Bridging		
(a) Voice Bridging, Per Port		
Two-Wire	VGB2W	$3.85
Four-Wire	VGB4W	$3.85

17. Rates and Charges (Cont'd)

17.5 Special Access Service (Cont'd)

17.5.5 Voice Grade Service (Cont'd)

(C) Optional Features and Functions (Cont'd)

	USOC	Monthly Rate
(1) Bridging (Cont'd)		
(b) Data Bridging per port		
Two-Wire	VDB2W	$5.35
Four-Wire	VDB4W	$5.35
(c) Telemetry and Alarm Bridging		
Active Bridging Channel Connections		
Per channel connected		
Split Band	VTBSB	$6.29
Summation	VGTBS	$6.29
Passive Bridging Channel Connections		
Per channel connected	VTBPB	$6.29

17. Rates and Charges (Cont'd)

17.5 Special Access Service (Cont'd)

17.5.5 Voice Grade Service (Cont'd)

(C) Optional Features and Functions (Cont'd)

	USOC	Monthly Rate
(2) Conditioning Per Termination		
C-Type	VGCC	$4.25
Improved Attenuation Distortion	VIAD	$23.90
Improved Envelope Delay Distortion	XDC	$21.05
Data Capability	VGDC	$2.95
Telephoto Capability	VGTC	$29.23
Sealing Current	VGCSC	$23.90
(3) Improved Return Loss for Effective Two-Wire or Four-Wire Transmission Per Termination		
Two-Wire	VIRL2	$0.95
Four-Wire	VIRL4	$8.25
(4) Customer Specified Receive Level Per Two-Wire Termination	VCRL2	None

17. Rates and Charges (Cont'd)

17.5 Special Access Service (Cont'd)

17.5.5 Voice Grade Service (Cont'd)

(C) Optional Features and Functions (Cont'd)

	USOC	Monthly Rate
(5) Multiplexing		
Per arrangement		
Voice to Telegraph Grade	VGMPX	N/A
(6) Signaling Capability		
Per termination	VGSC	$7.65
(7) Selective Signaling Arrangement		
Per arrangement	VGSSA	N/A
(8) Transfer Arrangement (key activated[1] or Dial-Up[2])		
Per four port arrangement including control channel termination[3]	VGTA4	N/A
Per five port arrangement including control channel termination[3]	VGTA5	N/A
(9) Public Packet Switching Network (PPSN) Interface Arrangement		
Per arrangement	PPSN	N/A

1 The key activated control channel is rated as a Metallic Channel Termination and Channel Mileage, if applicable.

2 The Dial-Up option requires the customer to purchase the Controller Arrangement from 13.3.8 preceding.

3 An additional Channel Termination charge will apply whenever a spare channel is configured as a leg to the customer designated premises. Additional channel mileage charges will also apply when the transfer arrangement is not located in the customer designated premises serving wire center.

17. Rates and Charges (Cont'd)

17.5 Special Access Service (Cont'd)

17.5.6 Program Audio Service

Regulations concerning Program Audio Service are set forth in 7.7 preceding.

	USOC	Monthly Rate	USOC	Daily Rate
(A) Channel Termination Per Termination				
200 to 3500 Hz	PECT2	$14.75	DPET2	$2.50
100 to 8000 Hz	PFCT2	$17.65	DPFT2	$3.00
50 to 15000 Hz	PJCT2	$20.60	DPJT2	$3.50
(B) Channel Mileage				
(1) Channel Mileage Facility Per Mile				
200 to 3500 Hz	PECMF	$0.50	DPEMF	$0.075
100 to 8000 Hz	PFCMF	$0.90	DPFMF	$0.150
50 to 15000 Hz	PJCMF	$1.50	DPJMF	$0.250
(2) Channel Mileage Termination Per Termination				
200 to 3500 Hz	PECMT	$5.90	DPEMT	$1.00
100 to 8000 Hz	PFCMT	$8.85	DPFMT	$1.50
50 to 15000 Hz	PJCMT	$14.75	DPJMT	$2.50

17. Rates and Charges (Cont'd)

17.5 Special Access Service Cont'd)

17.5.6 Program Audio Service (Cont'd)

(C) Optional Features and Functions

	USOC	Monthly Rate	USOC	Daily Rate
(1) Bridging, Distribution Amplifier Per Port	PABDA	$9.18	DPBDA	$0.92
(2) Gain Conditioning Per Service	PAGC	$9.18	DPAGC	$0.92
(3) Stereo Per Service	PASTE	$7.50	DPSTE	$0.92

17. Rates and Charges (Cont'd)

17.5 Special Access Service (Cont'd)

17.5.7 Digital Data Service

Regulations concerning Digital Data Service are set forth in 7.9 preceding.

	USOC	Monthly Rate
(A) Channel Termination		
Per termination		
2.4 kbps	XACT4	$23.50
4.8 kbps	XBCT4	$23.50
9.6 kbps	XGCT4	$23.50
19.2 kbps	XECT4	$23.50
56.0 kbps	XHCT4	$23.50
64.0 kbps	XJCT4	$25.90
(B) Channel Mileage		
(1) Channel Mileage Facility		
Per Mile		
2.4 kbps	XACMF	$0.05
4.8 kbps	XBCMF	$0.05
9.6 kbps	XGCMF	$0.05
19.2 kbps	XECMF	$0.05
56.0 kbps	XHCMF	$0.05
64.0 kbps	XJCMF	$0.05
(2) Channel Mileage Termination		
Per Termination		
2.4 kbps	XACMT	$0.80
4.8 kbps	XBCMT	$0.80
9.6 kbps	XGCMT	$0.80
19.2 kbps	XECMT	$0.80
56.0 kbps	XHCMT	$0.80
64.0 kbps	XJCMT	$0.80

17. Rates and Charges (Cont'd)

17.5 Special Access Service (Cont'd)

17.5.7 Digital Data Service (Cont'd)

	USOC	Monthly Rate
(C) Optional Features and Functions		
(1) Bridging		
Per Port	DDB	$4.65
(2) Loop Transfer Arrangement (Key activated[2] or Dial-Up[3])		
Per four port arrangement[1]	DDLTA	N/A
(3) Public Packet Switching Network (PPSN) Interface Arrangement		
Per 9.6 kbps arrangement	DPPSN	N/A
Per 56.0 kbps arrangement		N/A

1 An additional Channel Termination charge will apply whenever a spare channel is configured as a leg to the customer designated premises. Additional Channel Mileage charges will also apply when the transfer arrangement is not located in the customer designated premises serving wire center.

2 The key activated control channel is rated as a Metallic Channel Termination and Channel Mileage, if applicable.

3 The Dial-Up option requires the customer to purchase the Controller Arrangement from 13.3.4 preceding.

17. Rates and Charges (Cont'd)

17.5 Special Access Service (Cont'd)

17.5.8 High Capacity Service

Regulations concerning High Capacity Service are set forth in 7.9 preceding.

	USOC	Monthly Rate
(A) Channel Termination		
Per Termination		
DS1 1.544 Mbps	HCCT	$51.44
DS3 44.736 Mbps	H3CT	$514.13
Per Mile, Over 3 Miles		
DS1		N/A
DS3		N/A
(B) Channel Mileage		
(1) Channel Mileage Facility		
Per Mile		
64 kbps	XJCMF	$0.05
1.544 Mbps	HCCMF	$1.48
44.736 Mbps	H3CMF	$14.71
(2) Channel Mileage Termination		
Per Termination		
64 kbps	XJCMT	$0.80
1.544 Mbps	HCCMT	$2.61
44.736 Mbps	H3CMT	$36.75

(C) Term Discount	Percentage
DS1 and DS3 Service	
36 Months	10%
60 Months	20%

17. Rates and Charges (Cont'd)

17.5 Special Access Service (Cont'd)

17.5.8 High Capacity Service

(D) The Company will waive the early discontinuance charge specified in Section 7.2.8(B)(1)(c) provided the customer maintains, in service, at least 90 percent of the interstate and intrastate circuits of a particular service type The early discontinuance charge will be determined as follows.

(1) On July 1 of each year, the Company will count the total number of circuits (intrastate and interstate) for each service type (e.g., DS1, DS3) in service by a customer. This will be the base circuit count for the next annual period, i.e. July 1 through June 30.

(2) Each time a circuit subject to an interstate early discontinuance charge is terminated, the Company will do the following:

(a) Count the number of intrastate and interstate circuits of the circuit type remaining in service.

(b) If the number remaining in service is below 90 percent of the base circuit count an early discontinuance charge will apply to each interstate circuit below the 90 percent base that is being discontinued.

(3) As an example, if a customer has 100 DS-1 intrastate and interstate circuits on July 1 and discontinues 5 interstate circuits during the following twelve month period, all early discontinuance charges will be waived. If, on the other hand, the customer discontinues 12 interstate circuits during the same period, the discontinuance charge will be waived with respect to the first 10 circuits, but the charge will apply to the eleventh and twelfth discontinued circuit.

(4) This waiver provision will not apply to any customer that did not have any intrastate or interstate circuits on July 1 of the preceding annual period.

17. Rates and Charges (Cont'd)

17.5 Special Access Service (Cont'd)

17.5.8 High Capacity Service (Cont'd)

(C) Optional Features and Functions

	USOC	Monthly Rate
(1) Multiplexing		
Per Arrangement		
DS3 to DS1	HCMP3	$226.25
DS1 to Voice [1]	HCM1V	$176.00
DS1 to DS0	HCM10	$176.00
DS0 to Subrates		
- Up to 20 2.4 kbps services	HMP24	
- Up to 10 4.8 kbps services	HMP48	
- Up to 5 9.6 kbps services	HMP96	

(2) DSL Access Service Connection	Monthly Rate	Nonrecurring Charge
(a) Per 10BASE-T	$215.95	$170.00
(b) Per 100BASE-T	$1,655.45	$555.00

[1] Applies to through connections of 2.4, 4.8, 9.6, 56.0 and 64 kbps.

17. Rates and Charges (Cont'd)

17.5 Special Access Service (Cont'd)

17.5.8 High Capacity Service (Cont'd)

		USOC	Monthly Rate
(C)	Optional Features and Functions (Cont'd)		
	(2) Automatic Loop Transfer Per arrangement[1]	HCALT	N/A
	(3) Transfer Arrangement (key activated[2] or Dial-Up[3]) Per four port arrangement including control channel termination[4]	HCTA	N/A
(D)	Network Channel Terminating Equipment (NCTE) Per termination[5]		
	- 1.544 Mbps	NCTE	N/A
	- Automatic Loop Transfer	NCALT	N/A
(E)	Clear Channel Capability Per 1.544 Mbps transmission path	CCCC	N/A

		USOC	Monthly Rate	Nonrecurring Charge
(F)	ADSL Access Service Connection			
	Per 1.544 Mbps		$90.00	$170.00
	Per 44.736 Mbps		$539.85	$555.00
	Per OC3		- See 17.6.9 following	
(G)	Shared SONET Ring Interoffice Transport Per DS3 Channel Mileage Facility		None	

1 An additional Channel Termination charge will apply whenever the spare line is provided as a leg to the customer designated premises.

2 The key activated control channel is rated as a Metallic Channel Termination and Channel Mileage, if applicable.

3 The Dial-Up option requires the customer to purchase the Controller arrangement from 13.3.4 preceding.

4 An additional Channel Termination charge will apply whenever a spare channel is configurated as a leg to the customer premises. Additional channel mileage charges will apply when the transfer arrangement is not located in the customer designated premises serving wire center.

5 NCTE will only be provided under tariff if it existed in the Telephone Company's inventory as of November 18, 1983.

17. Rates and Charges (Cont'd)

17.5 Special Access Service (Cont'd)

17.5.9 Ethernet Transport

(A) Channel Termination

(1) Month-to-Month Rates

- Per Point of Termination

	Monthly Rates			Nonrecurring
	Within CO	0-3 Miles	Over 3 Miles	Installation Charges
10 Mbps	$260.00	$1,340.00	$2,200.00	$800.00
20 Mbps	$930.00	$1,360.00	$2,240.00	$900.00
50 Mbps	$960.00	$1,420.00	$2,360.00	$900.00
100 Mbps	$1,020.00	$2,040.00	$3,910.00	$1,000.00
150 Mbps	$1,050.00	$3,980.00	$4,890.00	$1,500.00
300 Mbps	$1,090.00	$4,450.00	$5,380.00	$5,000.00
450 Mbps	$1,120.00	$4,650.00	$5,600.00	$5,000.00
600 Mbps	$1,140.00	$4,830.00	$5,810.00	$10,000.00
1 Gbps	$1,190.00	$5,850.00	$6,860.00	$10,000.00

17. Rates and Charges (Cont'd)

17.5 Special Access Service (Cont'd)

17.5.9 Ethernet Transport (Cont'd)

(A) Channel Termination (Cont'd)

(2) 1 Year Commitment Rates

- Per Point of Termination

	Monthly Rates			Nonrecurring
	Within CO	0-3 Miles	Over 3 Miles	Installation Charges
10 Mbps	$240.00	$1,250.00	$2,040.00	$800.00
20 Mbps	$860.00	$1,270.00	$2,090.00	$900.00
50 Mbps	$890.00	$1,330.00	$2,180.00	$900.00
100 Mbps	$940.00	$1,910.00	$3,640.00	$1,000.00
150 Mbps	$990.00	$3,690.00	$4,540.00	$1,500.00
300 Mbps	$1,020.00	$4,130.00	$5,000.00	$5,000.00
450 Mbps	$1,040.00	$4,310.00	$5,190.00	$5,000.00
600 Mbps	$1,050.00	$4,480.00	$5,410.00	$10,000.00
1 Gbps	$1,110.00	$5,440.00	$6,370.00	$10,000.00

17. Rates and Charges (Cont'd)

17.5 Special Access Service (Cont'd)

17.5.9 Ethernet Transport (Cont'd)

(A) Channel Termination (Cont'd)

(3) 3 Year Commitment Rates

- Per Point of Termination

	Monthly Rates			Nonrecurring Installation Charges
	Within CO	0-3 Miles	Over 3 Miles	
10 Mbps	$220.00	$1,110.00	$1,820.00	$800.00
20 Mbps	$770.00	$1,120.00	$1,840.00	$900.00
50 Mbps	$800.00	$1,180.00	$1,940.00	$900.00
100 Mbps	$840.00	$1,690.00	$3,220.00	$1,000.00
150 Mbps	$880.00	$3,270.00	$4,020.00	$1,500.00
300 Mbps	$910.00	$3,650.00	$4,420.00	$5,000.00
450 Mbps	$920.00	$3,810.00	$4,590.00	$5,000.00
600 Mbps	$930.00	$3,970.00	$4,780.00	$10,000.00
1 Gbps	$990.00	$4,820.00	$5,640.00	$10,000.00

17. Rates and Charges (Cont'd)

17.5 Special Access Service (Cont'd)

17.5.9 Ethernet Transport (Cont'd)

(A) Channel Termination (Cont'd)

(4) 5 Year Commitment Rates

- Per Point of Termination

	Monthly Rates			Nonrecurring
	Within CO	0-3 Miles	Over 3 Miles	Installation Charges
10 Mbps	$215.00	$960.00	$1,650.00	$800.00
20 Mbps	$660.00	$970.00	$1,600.00	$900.00
50 Mbps	$680.00	$1,010.00	$1,680.00	$900.00
100 Mbps	$730.00	$1,460.00	$3,100.00	$1,000.00
150 Mbps	$750.00	$2,840.00	$3,490.00	$1,500.00
300 Mbps	$780.00	$3,180.00	$3,840.00	$5,000.00
450 Mbps	$800.00	$3,310.00	$3,990.00	$5,000.00
600 Mbps	$810.00	$3,450.00	$4,150.00	$10,000.00
1 Gbps	$850.00	$4,180.00	$4,900.00	$10,000.00

17. Rates and Charges (Cont'd)

17.5 Special Access Service (Cont'd)

17.5.9 Ethernet Transport (Cont'd)

(B) Channel Mileage

(1) Month-to-Month Rates

	Monthly Rates	
	Termination (Fixed)	Facility (Per Mile)
10 Mbps	$280.00	$40.00
20 Mbps	$290.00	$50.00
50 Mbps	$370.00	$60.00
100 Mbps	$600.00	$100.00
150 Mbps	$1,270.00	$120.00
300 Mbps	$1,910.00	$200.00
450 Mbps	$2,840.00	$320.00
600 Mbps	$3,530.00	$490.00
1 Gbps	$6,290.00	$600.00

17. Rates and Charges (Cont'd)

17.5 Special Access Service (Cont'd)

17.5.9 Ethernet Transport (Cont'd)

(B) Channel Mileage (Cont'd)

(2) 1 Year Commitment Rates

	Monthly Rates	
	Termination (Fixed)	Facility (Per Mile)
10 Mbps	$260.00	$35.00
20 Mbps	$280.00	$45.00
50 Mbps	$340.00	$55.00
100 Mbps	$570.00	$85.00
150 Mbps	$1,180.00	$110.00
300 Mbps	$1,770.00	$190.00
450 Mbps	$2,630.00	$300.00
600 Mbps	$3,290.00	$470.00
1 Gbps	$5,840.00	$570.00

17. Rates and Charges (Cont'd)

17.5 Special Access Service (Cont'd)

17.5.9 Ethernet Transport (Cont'd)

(B) Channel Mileage (Cont'd)

(3) 3 Year Commitment Rates

	Monthly Rates	
	Termination (Fixed)	Facility (Per Mile)
10 Mbps	$240.00	$35.00
20 Mbps	$250.00	$45.00
50 Mbps	$310.00	$55.00
100 Mbps	$500.00	$85.00
150 Mbps	$1,040.00	$110.00
300 Mbps	$1,570.00	$190.00
450 Mbps	$2,330.00	$300.00
600 Mbps	$2,900.00	$470.00
1 Gbps	$5,170.00	$570.00

17. Rates and Charges (Cont'd)

17.5 Special Access Service (Cont'd)

17.5.9 Ethernet Transport (Cont'd)

(B) Channel Mileage (Cont'd)

(4) 5 Year Commitment Rates

	Monthly Rates	
	Termination (Fixed)	Facility (Per Mile)
10 Mbps	$220.00	$30.00
20 Mbps	$240.00	$40.00
50 Mbps	$280.00	$50.00
100 Mbps	$430.00	$80.00
150 Mbps	$910.00	$100.00
300 Mbps	$1,360.00	$180.00
450 Mbps	$2,020.00	$280.00
600 Mbps	$2,520.00	$450.00
1 Gbps	$4,490.00	$550.00

17. Rates and Charges (Cont'd)

17.6 Other Services

17.6.1 Additional Engineering

Regulations concerning Additional Engineering are set forth in Section 13.1 preceding.

Additional Engineering Periods	USOC	Each Half Hour or Fraction Thereof	Tariff Reference
(A) Basic Time Regularly scheduled working hours, Per Engineer	AEHBD	$42.69	13.1
(B) Overtime Outside of regularly scheduled working hours on a scheduled work day, Per Engineer	AEHOD	$64.04	13.1
(C) Premium Time Outside of scheduled work day, Per Engineer	AEHPD	$85.38	13.1

17. Rates and Charges (Cont'd)

17.6 Other Services (Cont'd)

17.6.2 Additional Labor

Regulations concerning Additional Labor are set forth in Section 13.2 preceding.

	USOC	Each Half Hour or Fraction Thereof	Tariff Reference
Additional Labor Periods			
(A) Installation or Repair			
Overtime Outside of regularly scheduled working Overtime hours on a scheduled work day, Per Technician	ALHOD	$48.71	13.2
Premium Time Outside of scheduled work day, Per Technican	ALHPD	$64.95*	13.2
(B) Standby Basic Time Regularly scheduled working hours, Per Technican	ALTBT	$32.47	13.2
Overtime Outside of regularly scheduled working hours on a scheduled work day, Per Technican	ALTOT	$48.71*	13.2
Premium Time Outside of scheduled work day, Per Technican	ALTPT	$64.95*	13.2

* A call out of a Telephone Company employee at a time not consecutive with the employee's scheduled work period is subject to a minimum charge of four hours.

17. Rates and Charges (Cont'd)

17.6 Other Services (Cont'd)

17.6.2 Additional Labor (Cont'd)

Additional Labor Periods	USOC	Each Half Hour or Fraction Thereof	Tariff Reference
(C) Testing and Maintenance with other Telephone Companies, or Other Labor			
Basic Time Regularly scheduled working hours, Per Technican	ALKBT	$32.47	13.2
Overtime Outside of regularly scheduled working hours on a scheduled work day, Per Technican	ALKOT	$48.71*	13.2
Premium Time Outside of scheduled work day, Per Technican	ALKPT	$84.95*	13.2

* A call out of a Telephone Company employee at a time not consecutive with the employee's scheduled work period is subject to a minimum charge of four hours.

17. Rates and Charges (Cont'd)

17.6 Other Services (Cont'd)

17.6.3 Miscellaneous Services

Regulations concerning Miscellaneous Services are set forth in Section 13.3 preceding.

(A) Additional Cooperative Acceptance Testing - Switched Access
See rates for Additional Labor set forth in 17.6.2(C), preceding.

(B) Additional Automatic Testing - Switched Access To First Point of Switching

Additional Tests	USOC	Per Test Per Transmission Path	Tariff Reference
Gain-Slope Tests	AATGS	$2.89	13.3.1(A)(2)
C-Notched Noise Tests	AATCN	$2.89	13.3.1(A)(2)
1004 Hz Loss**	AATHL	$2.89	13.3.1(A)(2)
C-Message Noise**	AATCM	$2.89	13.3.1(A)(2)
Balance (return loss)**	AATB	$2.89	13.3.1(A)(2)

(C) Additional Manual Testing - Switched Access To First Point of Switching

Additional Tests: Gain-Slope, C-Notched Noise and any other agreed to tests.
See Rate for Additional Labor as set forth in 17.6.2(C), preceding.

(D) Additional Cooperative Acceptance Testing - Special Access
See Rate for Additional Labor as set forth in 17.6.2(C), preceding.

(E) Additional Manual Testing - Special Access
See Rate for Additional Labor as set forth in 17.6.2(C), preceding.

(F) Maintenance of Service
See Rate for Additional Labor as set forth in 17.6.2(C), preceding.

* A call out of a Telephone Company employee at a time not consecutive with the employee's scheduled work period is subject to a minimum charge of four hours.

** 1004 Hz Loss, C-Message Noise and Balance are non-chargeable routine tests, however, they may be requested on an as needed or more than routine scheduled basis, in which case the charges herein apply.

17. Rates and Charges (Cont'd)

17.6 Other Services (Cont'd)

17.6.3 Miscellaneous Services (Cont'd)

(G) Telecommunications Service Priority

	USOC	Nonrecurring Charge	Tariff Reference
Per Service Arranged	TSP	$160.00	13.3.3

(H) Controller Arrangement

	USOC	Monthly Rate	Tariff Reference
Per Arrangement	TCA	N/A	13.3.4(A)

(I) Predesignated Interexchange Carrier (PIC) Change Charge*

Per Telephone Exchange Service Line, or trunk for each interLATA PIC change:	Nonrecurring Charge	Tariff Reference
(1) Submitted using manual methods	$5.50	13.4
(2) Submitted using electronic methods	$1.25	
(3) Submitted using manual methods when both the interLATA PIC and intraLATA PIC selections are changed simultaneously	$2.75	
(4) Submitted using electronic methods when both the interLATA PIC and intraLATA PIC selections are changed simultaneously	$0.63	

(J) Reserved For Future Use

* This charge is generally billed to the end user who is the subscriber to the Telephone Exchange Service. In those instances where the IC both requests the PIC change, and requests the associated charge be billed to it, the Telephone Company will bill the IC. In the event the subscriber is incorrectly presubscribed due to misassignment on the part of the Telephone Company, no charge shall apply. In the event the subscriber denies requesting a PIC change, the Telephone Company will credit the subscriber's account for the PIC change charge associated with the alleged unauthorized change, if such charge was billed to the subscriber. The Telephone Company will then bill the IC responsible for the alleged unauthorized change a PIC change charge to return the subscriber to its previous authorized carrier and, if initially billed to the subscriber, the PIC change charge for the alleged unauthorized change.

17. Rates and Charges (Cont'd)

17.6 Other Services (Cont'd)

17.6.3 Miscellaneous Services (Cont'd)

(K) Blocking Service*

	USOC	Nonrecurring Charge	Tariff Reference
Per Exchange Service Line or Trunk and/or Per Feature Group A Switched Access Line	BSSAL	N/A	13.8

(L) Billing Name and Address Service

	USOC	Nonrecurring Charge	Tariff Reference
Per BNA Order	BNAOC	$23.60	3.9.4(A)
Per BNA Record	BNANC	$0.05	13.9.4(A)
Optional Magnetic Tape Charge Per Magnetic Tape	BNAMT	$40.00	13.9.4(B)
Optional Format Programming Charge Per each half hour, or fraction thereof	BNAFC		13.9.4(C)

(M) Originating Line Screening (OLS) Service

	USOC	Nonrecurring Charge	Tariff Reference
Per Exchange Service Line	OLS	N/A	13.10

(N) Coin Supervision Additive Service

	USOC	Monthly Rate	Tariff Reference
Per Exchange Service Line	CSAS	$2.75	13.11

(O) Payphone-Specific Coding Digits Service

	USOC	Monthly Rate	Tariff Reference
Per Pay Telephone Line		$0.62	13.12

* Blocking access to 900 Service is offered to all subscribers at no charge
(a) from November 1, 1993 through December 31, 1993 and
(b) at the time telephone service is established at a new number and for 60 days thereafter.

17. Rates and Charges (Cont'd)

17.6 Other Services (Cont'd)

17.6.3 Miscellaneous Services (Cont'd)

(P) Unattended Group Teleconferencing Service

	USOC	Monthly Rate	Tariff Reference
Per Conference Port		$50.00	13.13

17. Rates and Charges (Cont'd)

17.6 Other Services (Cont'd)

17.6.4 Special Federal Government Access Services

Regulations concerning Special Federal Government Access Services are as set forth in Section 10, preceding.

(A)

Voice Grade Secure Communications	Monthly Rates	Nonrecurring Charges	Termination Charges
Type I, each T-3 Conditioning,	ICB rates and charges apply		
Additional Conditioning, per service termination	ICB rates and charges apply		
Type II, each G-1 Conditioning,	ICB rates and charges apply		
Type III, each G-2 Conditioning,	ICB rates and charges apply		
Additional Conditioning, per service termination	ICB rates and charges apply		
Type IV, each G-3 Conditioning,	ICB rates and charges apply		
Additional Conditioning, per service termination	ICB rates and charges apply		

(B) Wideband Digital Special Access Service

Wideband Secure Communications	Monthly Rates	Nonrecurring Charges	Termination Charges
Type I, each	ICB rates and charges apply		
Type II, each	ICB rates and charges apply		
Type III, each	ICB rates and charges apply		

17. Rates and Charges (Cont'd)

17.6 Other Services (Cont'd)

17.6.5 Special Facilities Routing of Access Services

Regulations concerning Special Facilities Routing of Access Services are as set forth in Section 11, preceding.

(A) Diversity

For each service provided in accordance with 11.1.1 preceding, the rates and charges will be developed on an individual case basis.

(B) Avoidance

For each service provided in accordance with 11.1.2 preceding, the rates and charges will be developed on an individual case basis.

(C) Diversity and Avoidance Combined

For each service provided in accordance with 11.1.1 and 11.1.2 preceding, combined, the rates and charges will be developed on an individual case basis.

(D) Cable-Only Facilities

For each service provided in accordance with 11.1.4 preceding, the rates and charges will be developed on an individual case basis.

17. Rates and Charges (Cont'd)

17.6 Other Services (Cont'd)

17.6.6 Specialized Service or Arrangements

Regulations concerning Specialized Service or Arrangements are as set forth in Section 12, preceding.

Rates and Charges for Specialized Service or Arrangements are developed and filed on an individual case basis.

17. Rates and Charges (Cont'd)

17.6 Other Services (Cont'd)

17.6.7 Public Packet Data Network

17.6.7.1 Frame Relay Access Service

Regulations concerning Frame Relay Access Service are set forth in 16.1 preceding.

	Monthly Rate	Nonrecurring Charge
Connections		
(A) Frame Relay Access Connection (FRAC) (per FRAC)		
56.0 kbps	$79.35	$240.00
64.0 kbps	$79.35	$240.00
1.544 Mbps	$199.80	$251.00
44.736 Mbps	N/A	N/A
(B) Frame Relay Inter-network Connection (FRIC) (per FRIC)		
1.544 Mbps	$199.80	$251.00
44.736 Mbps	N/A	N/A
(C) End User Port (per port)		
56.0 kbps	$ 57.15	
64.0 kbps	$ 57.15	
1.544 Mbps	$133.10	
44.736 Mbps	$930.60	
(D) Inter-network Customer Port (per port)		
1.544 Mbps	$133.10	
44.736 Mbps	$930.60	
(E) Term Discounts	Percentage	
36 months	10%	
60 months	20%	

17. Rates and Charges (Cont'd)

17.6 Other Services (Cont'd)

17.6.7 Public Packet Data Network

17.6.7.1 Frame Relay Access Service (Cont'd)

(F) Permanent Virtual Connections (PVCs)

(1) Standard CIR	Monthly Rate	(2) Extended CIR	Monthly Rate
8 kbps	$ 4.08	8 kbps	$ 3.55
16 kbps	$ 4.08	16 kbps	$ 3.55
28 kbps	$ 4.90	28 kbps	$ 4.15
32 kbps	$ 4.90	32 kbps	$ 4.15
56 kbps	$ 5.71	56 kbps	$ 4.75
64 kbps	$ 5.71	64 kbps	$ 4.75
128 kbps	$ 7.35	128 kbps	$ 8.85
192 kbps	$ 9.80	192 kbps	$ 14.75
256 kbps	$ 11.43	256 kbps	$ 17.65
384 kbps	$ 16.33	384 kbps	$ 26.45
512 kbps	$ 22.86	512 kbps	$ 35.30
768 kbps	$ 29.39	768 kbps	$ 52.90
769 - 1152 kbps	$ 31.02	769 - 1152 kbps	$ 75.25
1153 - 1536 kbps	$ 40.82	1153 - 1536 kbps	$ 94.05
1537 - 4000 kbps	$ 97.96	1537 - 4000 kbps	$ 235.05
4001 - 10000 kbps	$204.08	4001 - 10000 kbps	$ 564.05
10001 - 15000 kbps	$269.38	10001 - 15000 kbps	$ 802.00
15001 - 20000 kbps	$334.68	15001 - 20000 kbps	$1,007.65
20001 - 25000 kbps	$399.99	20001 - 25000 kbps	$1,183.90
25001 - 30000 kbps	$465.29	25001 - 30000 kbps	$1,327.85
30001 - 35000 kbps	$530.60	30001 - 35000 kbps	$1,442.45
35001 - 40000 kbps	$595.90	35001 - 40000 kbps	$1,527.60
40001 - 45000 kbps	$653.04	40001 - 45000 kbps	$1,577.55

	Nonrecurring Charge
(G) PVC Installation Charge	$50.00
(H) PVC Rearrangement Charge	$25.00

17. Rates and Charges (Continued)

17.6 Other Services (Continued)

17.6.7 Public Packet Data Network (Continued)

17.6.7.2 Asynchronous Transfer Mode Cell Relay Access Service

Regulations concerning Asynchronous Transfer Mode Cell Relay Access Service (ATM-CRS) are set forth in Section 16.2, preceding.

(1) Ports

(a) Per Basic UNI or NNI Port

Port Speed	Monthly Rate	Nonrecurring Charge
1.544 Mbps	$211.55	$500.00
44.736 Mbps	$1,175.10	$750.00
155.52 Mbps	$1,821.40	$1,200.00
622.08 Mbps	$2,643.90	$1,500.00

17. Rates and Charges (Continued)

17.6 Other Services (Continued)

17.6.7 Public Packet Data Network (Continued)

17.6.7.2 Asynchronous Transfer Mode Cell Relay Access Service

(2) Virtual Paths

(a) Path charge, per Path

Monthly Rate	Nonrecurring Charge
$2.95	$70.00

(b) Capacity charge, per Megabit of capacity, per path

Traffic Route Prioritization Parameter

Path Size	CBR	VBR-rt	VBR-nrt	UBR
1 to 50 Mbps	$14.75	$11.80	$8.85	$7.35
51 to 150 Mbps	$22.50	$17.50	$12.50	$10.00
Over 150 Mbps	$17.50	$12.50	$10.00	$7.50

(3) Virtual Circuit Channels

Per Virtual Circuit Channel

Monthly Rate	Nonrecurring Charge
$0.95	$70.00

17. Rates and Charges (Continued)

17.6 Other Services (Continued)

17.6.7 Public Packet Data Network (Continued)

17.6.7.2 Asynchronous Transfer Mode Cell Relay Access Service

(4) Optional Features and Functions

(a) DSL Access Service Connection

(i) Per Basic UNI or NNI Port Equipped

Port Speed	Nonrecurring Charge
1.544 Mbps	$170.00
44.736 Mbps	$555.00
155.52 Mbps	$1,145.00
622.08 Mbps	$1,300.00

(ii) Reserved for Future Use

(iii) Per 1.544 Mbps DSL VCC

Monthly Rate	Nonrecurring Charge
$24.50	$70.00

(iv) Per MM-VCC

Monthly Rate	Nonrecurring Charge
Per 1 Megabit increment	$5.00
$1.55	
Per 4 Megabit increment	
$3.00	

17.6.8 Reserved For Future Use

17. Rates and Charges (Cont'd)

17.6 Other Services (Cont'd)

17.6.9 Synchronous Optical Channel Service

Regulations concerning Synchronous Optical Channel Service are set forth in 7.2.1 preceding.

		Monthly	3 Year(36 Month)	5 Year (60 Month)
(A)	Channel Termination Per Termination			
	OC3/C3c	$763.80	$687.45	$611.05
	OC12	$1,468.85	$1,321.95	$1,175.10
	OC48	$2,937.70	$2,643.90	$2,350.15
	Per Mile, over 3 Miles OC3, OC12 and OC48	N/A	N/A	N/A

Channel Termination nonrecurring charge per termination is $786.00.

(B)	Channel Mileage Facility Per Mile			
	OC3/OC3c	$58.80	$52.90	$47.05
	OC12	$117.55	$105.80	$94.05
	OC48	$176.30	$158.65	$141.05
(C)	Channel Mileage Termination per Termination			
	OC3/C3c	$117.55	$105.80	$94.05
	OC12	$587.55	$528.80	$470.05
	OC48	$1,175.10	$1,057.60	$940.05

17. Rates and Charges (Cont'd)

17.6 Other Services (Cont'd)

17.6.9 Synchronous Optical Channel Service (Cont'd)

(D) Optional Features and Functions

		Monthly	3 Year (36 Month)	5 Year (60 Month)
(1)	Customer Node			
	Per Node			
	OC3/OC3c	$293.80	$264.40	$235.05
	OC12	$1,057.60	$951.85	$846.05
	OC48	$3,525.20	$3,172.70	$2,820.20
	Customer Node nonrecurring charge per node is $786.00.			
(2)	Customer Premise			
	Port Per Port			
	STS-1	$44.10	$39.70	$35.30
	DS3	$44.10	$39.70	$35.30
	OC3/OC3c	$146.90	$132.25	$117.55
	OC12	$470.05	$423.05	$376.05
(3)	Add/Drop Multiplexing			
	Central Office Port			
	Per Port			
	DS1 (1.544 Mbps)	$17.65	$17.65	$17.65
	DS3 (44.73 Mbps)	$29.40	$29.40	$29.40
	OC3 (155.52 Mbps)	$88.15	$88.15	$88.15
	OC12 (622.08 Mbps)	$411.30	$411.30	$411.30
(4)	Shared SONET Ring			
	Interoffice Transport			
	per Channel Mileage			
	Facility	None	None	None
(5)	DSL Access Service			
	Connection			
	OC3/OC3c	$1,331.55	$1,331.55	$1,331.55

17. Rates and Charges (Cont'd)

17.6 Other Services (Cont'd)

17.6.10 Reserved For Future Use

17.6.11 Local Number Portability (LNP) Query Service

(A) Prearranged LNP Query

- Per Query

End Office	Tandem Office
$0.003726	$0.003726

(B) Default LNP Query

- Per Query

End Office	Tandem Office
$0.003726	$0.003726