6. Switched Access Service

6.1 General

Switched Access Service, which is available to customers for their use in furnishing their services to end users, provides a two-point electrical communications path to a customer's facilities from an end user's premises. It provides for the use of common terminating switching and transport facilities and common subscriber plant of the Telephone Company. Switched Access Service provides for the ability to originate calls from an end user's premises to a customer's facilities, and to terminate calls from a customer's facilities to an end user's premises in the LATA where it is provided. Specific references to material describing the elements of Switched Access Service are provided in 6.1.1 and 6.1.2 following.

Rates and charges for Switched Access Service depend generally on its use by the customer, i.e., for MTS or WATS services, MTS-WATS equivalent services, or other services (e.g., foreign exchange service), and whether it is provided in a Telephone Company end office that is equipped to provide equal access (Trunkside BSA-101XXXX Option or Feature Group D Access, described in 6.3.2(C) and 6.1.1(D) following). Rates and charges for Switched Access Service are set forth in 6.9 following. The application of rates for Switched Access Service is described in 6.8 following. Rates and charges for services other than Switched Access Service, e.g., a customer's interLATA toll message service, may also be applicable when Switched Access Service is used in conjunction with these other services. Descriptions of such applicability are provided in 6.2.1(A)(9), 6.2.1(B)(4), 6.2.2(A)(5), 6.2.3(A)(5), 6.2.4(A)(4), 6.8.10 and 6.8.12 following. Finally, a credit is applied against lineside Switched Access Service charges as described in 6.8.11 following.

Pursuant to FCC Report and Order and Order On Further Reconsideration and Supplemental Notice of Proposed Rulemaking, 6 FCC Rcd 4524 (1991), the Telephone Company offers a Lineside Switched Access BSA (Lineside BSA) and a Trunkside Switched Access BSA (Trunkside BSA) and a number of BSEs.

6.1.1 Switched Access Service Arrangements

Switched Access Service is provided in three unbundled service arrangements of alternative features and optional BSEs called (1) Lineside Switched Access BSA (Lineside BSA) and (2) Trunkside Switched Access BSA (Trunkside BSA) and (3) Dedicated Network Access Link (DNAL) BSA, and in four optional service arrangements of standard and optional features called (1) Feature Group A (FGA), (2) Feature Group B (FGB), (3) Feature Group C (FGC), and (4) Feature Group D (FGD).

6. Switched Access Service (Cont'd)

6.1 General (Cont'd)

6.1.1 Switched Access Service Arrangements (Cont'd)

The arrangements are differentiated by their technical characteristics, e.g., lineside vs. trunkside connection at the Telephone Company entry switch, and by the manner in which an end user accesses them in originating calling, e.g., with or without an access code. A description of Lineside BSA, Trunkside BSA and DNAL BSA is in 6.3 following. A description of each Feature Group is in 6.2 following.

Switched Access Service is provided in six service categories of standard and optional features.

These are differentiated by their technical characteristics, e.g., lineside vs. trunkside connection at the Telephone Company entry switch, and the manner in which an end user accesses them in originating calling, e.g., with or without an access code. Following is a brief description of the Feature Group arrangements.

(A) Feature Group A (FGA)

FGA Access provides lineside access to Telephone Company end office switches with an associated seven-digit local telephone number for the customer's use in originating and terminating communications (1) to an Interexchange Carrier's interstate service or (2) to the Telephone Company's facilities when used to provide dial tone service from the Telephone Company's end office switch in a state other than the state of the customer's normal serving end office.

When ordering FGA service, the customer must specify the Interexchange Carrier to which the FGA service is physically connected or specify the means by which the FGA access communications is transported interstate. If the customer cannot specify the type of connection used to transport traffic interstate, the lineside service should be obtained as provided under the Telephone Company's local and/or general exchange service tariffs.

A more detailed description of FGA Access is provided in 6.2.1 following.

6. Switched Access Service (Cont'd)

6.1 General (Cont'd)

6.1.1 Switched Access Service Arrangements (Cont'd)

(B) Feature Group B (FGB)

FGB Access, which is available to all customers, provides trunkside access to Telephone Company end office switches with an associated uniform 950-0XXX or 950-1XXX access code for the customer's use in originating and terminating communications. A more detailed description of FGB Access is provided in 6.2.2 following.

ATS Access Line Service, for use in the originating and terminating direction, is available with Feature Group B.

(C) Feature Group C (FGC)

FGC Access, which is available only to providers of MTS and WATS, provides trunkside access to Telephone Company end office switches for the customer's use in originating and terminating communications. This service is available in all end offices which are not equipped for Feature Group D End Office Switching. Existing FGC Access will be converted to Feature Group D Access when it becomes available in an end office. A more detailed description of the FGC Access is provided in 6.2.3 following.

(D) Feature Group D (FGD)

FGD Access, which is available to all customers, provides trunkside access to Telephone Company end office switches with an associated 101XXXX access code for the customer's use in originating and terminating communications. WATS Access Lines are ordered as set forth in 5.2 preceding. As an option, 950 on FGD Access is also available, where technically feasible, with an associated uniform 950-XXXX access code for the customer's use in originating traffic. Calls in the terminating direction will not be completed to 950-XXXX access codes. When used with the 950 dialing option, FGD is only available with SS7 signaling. A more detailed description of FGD Access is provided in 6.2.4 following.

6. Switched Access Service (Cont'd)

6.1 General (Cont'd)

6.1.1 Switched Access Service Arrangements (Cont'd)

(D) Feature Group D (FGD) (Cont'd)

Switched 56 Kilobit Service, as described in Section 6.2.4(A)(7) following is an optional service available for use with Feature Group D. Switched 56 Kilobit Service is ordered as set forth in 5.2 preceding.

Operator Transfer Service, as described in Section 6.2.4(A)(8) following, is an optional service available for use with Feature Group D. Operator Transfer Service is an originating only service and is ordered as set forth in 5.2 preceding. In addition to premium Feature Group D charges, or transitional rates for calls originating from non-equal access end offices, Operator Transfer Service is subject to the rates and charges specified in Section 6.1.2(B)(7) and 6.9.8 following.

(E) WATS Access Line Service

WATS Access Line Service is a type of special Access Service that is provided only for use with Lineside BSA, Trunkside BSA - 950 Option, Trunkside BSA - MTS/WATS Option, Trunkside BSA-101XXXX Option and Feature Groups A, B, C and D Switched Access Services. WATS Access Line Service connects an end user premises with a WATS serving office. This service is described in 7.2.3(E) following.

6. Switched Access Service (Cont'd)

6.1 General (Cont'd)

6.1.1 Switched Access Service Arrangements (Cont'd)

(F) Manner of Provision

Switched Access is furnished on a per-line or per-trunk basis respectively.

Trunks are differentiated by type and directionality of traffic carried over a Switched Access Service arrangement. Differentiation of traffic is necessary for the Telephone Company to properly design Switched Access Service to meet the traffic carrying capacity requirement of the customer.

There are three major traffic types. These are: Originating, Terminating and Directory Assistance. Originating traffic type represents access capacity within a LATA for carrying traffic from the end user to the customer; Terminating traffic type represents access capacity within a LATA for carrying traffic from the customer to the end user; and, Directory Assistance traffic type represents access capacity within a LATA for carrying Directory Assistance traffic from the customer to a Directory Assistance location. When ordering capacity for Trunkside BSA - 950 Option, Trunkside BSA - MTS/WATS Option, Trunkside BSA- 101XXXX Option, FGB Access, FGC Access or FGD Access, the customer must at a minimum specify such access capacity in terms of originating traffic type and/or terminating traffic type. All Feature Group B, Feature Group D, and Trunkside BSA traffic must be associated with a customer-provided Carrier Identification Code ("CIC" code). Directory Assistance traffic type is used for ordering Directory Assistance Access Service as set forth in 9. following.

6. Switched Access Service (Cont'd)

6.1 General (Cont'd)

6.1.1 Switched Access Service Arrangements (Cont'd)

(F) Manner of Provision (Cont'd)

Because some customers will wish, or may be required, to further segregate their originating Trunkside BSA - MTS/WATS Option, Trunkside BSA-101XXXX Option, FGC or FGD traffic into separate trunk groups, Originating traffic type is further categorized into Domestic, 500 Access Service, Toll Free Data Base Access Service, 900, Operator, IDDD, Switched 56 (S56) Kilobit Service, Operator Transfer, and Telecommunication Relay Service. Domestic traffic type represents access capacity for carrying only domestic traffic other than 500 Access Service, Toll Free Data Base Access Service, 900 and Operator traffic; IDDD traffic type represents access capacity for carrying only international traffic; 500 Access Service, Toll Free Data Base Access Service, 900 and Operator traffic type represents access capacity for carrying, respectively, only 500 Access Service, Toll Free Data Base Access Service, 900 or Operator traffic; and Switched 56 (S56) Kilobit Service, Operator Transfer, and Telecommunication Relay Service traffic types represents access capacity for carrying, respectively, only Software Network traffic, Switched 56 (S56) Kilobit Service, Operator Transfer, and Telecommunication Relay Service. "Toll Free" service includes any access service which utilizes the following NPA's: 800, 888, 877, 866, 855, 844, 833, and 822 as they become available to the industry.

When ordering such types of access capacity, the customer must specify Domestic, 500, Toll Free, 900, Operator IDDD, Switched 56 (S56) Kilobit Service, Operator Transfer, or Telecommunication Relay Service traffic type. Switched 56 (S56) Kilobit Service and Operator Transfer Service traffic must all be carried over a separate trunk group and cannot be combined with other traffic types.

An out of band signaling connection as described in following is required in conjunction with Trunkside BSA-101XXXX Option and Feature Group D equipped with out of band signaling and/or Billing Validation Service. An out of band signaling connection provides the interconnection between the Telephone Company's STP pair and the customer's SPOI(s).

When ordering out of band signaling with Trunkside BSA- 101XXXX Option and Feature Group D the customer shall specify that all traffic is to be equipped with out of band signaling.

6. Switched Access Service (Cont'd)

6.1 General (Cont'd)

6.1.2 Rate Categories

The following rate categories apply to Switched Access Service:

- Switched Transport (described in 6.1.2(A) following)
- End Office (described in 6.1.2(B) following)
- Common Line (described in Sections 3. and 4. preceding)
- Toll Free Data Base Access Service (described in 6.4.3(C) following)

In addition to the rate categories there is an Equal Access Recovery Charge that applies to Trunkside BSA-101XXXX Option and Feature Group D, and an Information Surcharge that applies to Lineside BSA, Trunkside BSAs and all Switched Access Feature Groups. The description and application of these charges are set forth in 6.1.2(B)(2) and 6.1.2(B)(3) following.

6. Switched Access Service (Cont'd)

6.1 General (Cont'd)

6.1.2 Rate Categories (Cont'd)

The following diagram depicts a generic view of the components of Switched Access Service and the manner in which the components are combined to provide a complete Access Service.

SwitchedAccessService

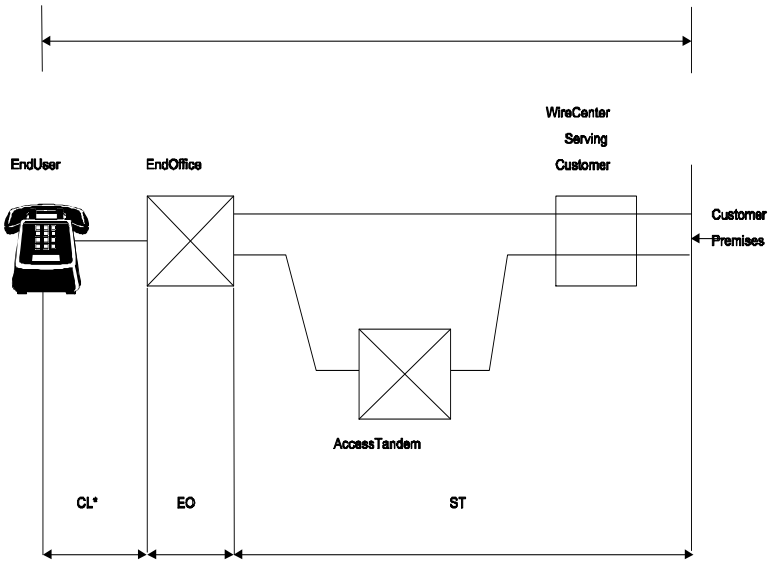

ST - SwitchedTransport
EO - EndOffice
CL - CommonLine

* Common Line access is provided under Sections 3. and 4. preceding.

6. Switched Access Service (Cont'd)

6.1 General (Cont'd)

6.1.2 Rate Categories (Cont'd)

(A) Switched Transport

Switched Transport provides the transmission facilities between the customer's facilities and the end office switch(es) where the customer's traffic is switched to originate or terminate customer's communications. For purposes of determining Switched Transport mileage, distance will be measured from the wire center that normally serves the customer's facilities to the end office switch for Direct Trunked Transport or from the end office to an access tandem for Tandem Switched Transport. Mileage measurement rules are set forth in 6.8.13 following.

Switched Transport is a two-way voice frequency transmission path comprised of Switched Entrance facilities, Direct Trunked Transport facilities, Tandem Switched Transport facilities and/or Host/Remote facilities which permit the transport of calls in the originating direction (from the end user switch to the customer's facilities) and in the terminating direction (from the customer's facilities to the end office switch), but not simultaneously. The voice frequency transmission path may be comprised of any form or configuration of plant capable of and typically used in the telecommunications industry for the transmission of voice and associated telephone signals within the frequency bandwidth of approximately 300 to 3000 Hz.

The Telephone Company will work cooperatively with the customer in determining (1) the Entrance Facility, (2) whether the service is to be directly routed to an end office switch or through an access tandem switch via Tandem Switched facilities, and (3) the directionality of the service. When the customer has ordered Trunkside BSA-101XXXX Option or FGD with the Switched 56 Kilobit Service, the Telephone Company will provide facilities that are capable of supporting transmission of digital data at a speed of 56 Kbps.

When the customer has ordered Trunkside BSA-101XXXX Option or FGD to carry traffic originated from a TRS Center, the Telephone Company will provide facilities between the TRS Center and the access tandem. The Telephone Company will ensure sufficient capacity exists between the TRS and the access tandem to handle all TRS originated traffic. Switched transport charges for TRS traffic will be applied as specified in 6.9.1, 6.8.1(D), and 6.8.13(J) following.

6. Switched Access Service (Cont'd)

6.1 General (Cont'd)

6.1.2 Rate Categories (Cont'd)

(A) Switched Transport (Cont'd)

Switched Transport is ordered under the access order provisions as set forth in Section 5 preceding. Design and traffic routing of Switched Transport Service is described in Section 6.6.2 following.

Switched Transport is comprised of an Entrance Facility rate category, as described in (1) following, a Direct Trunked Transport rate category, as described in (2) following, a Tandem Switched Transport rate category, as described in (3) following, and an Interconnection charge as described in (5) following.

(1) Entrance Facility Rate Category

An Entrance Facility provides the communication path between a customer's premises and the Telephone Company SWC of that premises for the sole use of the customer. The Entrance Facility category is comprised of a Voice Grade rate, a DS1 rate, a DS3 rate, DSR, DSSAN, or DSSSP. An Entrance Facility is required whether the customer's premises and the SWC are located in the same or different buildings. The types of facilities available for Entrance Facilities are described in 6.2.5 following.

(2) Direct Trunked Transport Rate Category

Direct Trunked Transport provides the transmission path from the SWC of the customer's premises to an end office or from the SWC to a tandem or in the case of voice grade service used for FGA/Lineside BSA, from the SWC to the Dial Tone Office (DTO). This transmission path is dedicated to the use of a single customer.

6. Switched Access Service (Cont'd)

6.1 General (Cont'd)

6.1.2 Rate Categories (Cont'd)

(A) Switched Transport (Cont'd)

(2) Direct Trunked Transport Rate Category (Cont'd)

The Direct Trunked Transport rate category is comprised of a monthly fixed rate and a monthly per mile rate based on the facility provided (i.e., Voice Grade, DS1, DS3, DSSSP, DSR, or DSSAN). DSR is comprised of Nodes, Fiber Mileage (per mile between nodes), and Ports. DSSAN is comprised of a fixed charge by Mileage Band. The fixed rate provides the circuit equipment at the ends of the transmission links. The per mile rate provides the transmission facilities, including intermediate transmission circuit equipment, between the end points of the circuit. The Direct Trunked Transport rate is the sum of the fixed rate and the per mile rate. For purposes of determining the per mile rate, mileage shall be measured as airline mileage between the SWC of the customer's premises and the end office or directly to the access tandem using the V&H coordinates method. The types of facilities available for Direct Trunked Transport are described in 6.2.5 following.

(3) Tandem Switched Transport Rate Category

Tandem Switched Transport provides the transmission facilities from the end office to the tandem utilizing tandem switching functions. Tandem Switched Transport consists of circuits used in common by multiple customers from the access tandem to an end office.

The Tandem Switched Transport rate category is comprised of a Tandem Transport fixed MOU rate, Tandem Transport Per Mile/Per MOU rate, and a Tandem Switching MOU rate. The fixed rate provides the circuit equipment at the end of the interoffice transmission links. The per mile rate provides the transmission facilities, including intermediate transmission circuit equipment between the end points of the interoffice circuit. For purposes of determining the per mile rate, mileage shall be measured as airline mileage between the end office and the tandem using the V&H coordinates method. The Tandem Switching rate provides for tandem switching facilities. The Tandem Switched Transport rate is the sum of the fixed rate, the per mile rate, and the Tandem Switching MOU rate.

6. Switched Access Service (Cont'd)

6.1 General (Cont'd)

6.1.2 Rate Categories (Cont'd)

(A) Switched Transport (Cont'd)

(3) Tandem Switched Transport Rate Category (Cont'd)

The Tandem Switched Transport fixed rate and the Tandem Transmission per mile/per MOU rate also apply to FGA with a Voice Grade Facility. The miles are measured from the DTO to the End Office.

The Dedicated Tandem Trunk Port is a monthly per port rate that provides a port for each dedicated trunk terminating on the serving wire center side of the access tandem.

The Transport Multiplexing rate provides for the use of common DS3 to DS1 multiplexers in the end office side of the access tandem for traffic that is switched at an access tandem and/or Feature Group A traffic.

(4) Host/Remote Rate Category

Host/Remote Transmission is composed of a fixed MOU rate and per mile/per MOU rate. The fixed rate provides for the circuit equipment at the end of the interoffice transmission. The per mile rate provides the transmission facilities between the end points of the interoffice circuit between the host and the remote. For purposes of determining the per mile rate, mileage will be measured as airline mileage using the V&H coordinates method. Mileage measurement rules are set forth in 6.8.13 following.

(5) Interconnection Charge

The Switched Transport Interconnection Charge charge is applied to all access minutes based on the directionality of the traffic carried over the Switched Access Service and whether or not it is provided under a collocated Interconnection Agreement.

6. Switched Access Service (Cont'd)

6.1 General (Cont'd)

6.1.2 Rate Categories (Cont'd)

(A) Switched Transport (Cont'd)

(6) Interface Groups

Ten Interface Groups are provided for terminating the Switched Transport at the customer's facilities. Each Interface Group provides a specified interface at customer's facilities (e.g., two-wire, four-wire, DS1, etc.). Where Telephone Company transmission facilities permit, the individual transmission path between the customer's facilities and the first point of switching may at the option of the customer be provided with optional features as set forth in 6.1.2(A)(7) and (8) following.

As a result of the customer's access order and the type of Telephone Company transport facilities serving the customer's facilities, the need for signaling conversions or two-wire to four-wire conversions, or the need to terminate digital or high frequency facilities in channel bank equipment may require that Telephone Company equipment be placed at the customer's facilities. For example, if a voice frequency interface is ordered by the customer and the Telephone Company facilities serving the customer's facilities are digital, then Telephone Company channel bank equipment must be placed at the customer's facilities in order to provide the voice frequency interface ordered by the customer.

Interface Group 1 is provided with Type C Transmission Specifications, and Interface Groups 2 through 10 are provided with Type A or B Transmission Specifications, depending on the Feature Group and whether the Access Service is routed directly or through an access tandem. All Interface Groups are provided with Data Transmission Parameters.

Only certain premises interfaces are available at the customer's facilities. The premises interfaces associated with the Interface Groups may vary among Switched Access Arrangements. The various premises interfaces which are available with the Interface Groups, and the Switched Access Arrangements with which they may be used, are set forth in 6.1.2(A)(7)(k) following. Compatibility and interface requirements for Trunkside BSA-101XXXX Option and FGD equipped with Switched 56 Kilobit Service capability are described in Technical Reference GR-334-CORE, Issue 1.

6. Switched Access Service (Cont'd)

6.1 General (Cont'd)

6.1.2 Rate Categories (Cont'd)

(A) Switched Transport (Cont'd)

(6) Interface Groups (Cont'd)

(a) Interface Group 1

Interface Group 1, except as set forth in the following, provides two-wire voice frequency transmission at the point of termination at the customer's premises. The interface is capable of transmission of voice and associated telephone signals within the frequency bandwidth of approximately 300 to 3000 Hz.

Interface Group 1 is not provided in association with Trunkside BSA - MTS/WATS Option, Trunkside BSA-101XXXX Option, FGC and FGD when the first point of switching is an access tandem. In addition, Interface Group 1 is not provided in association with Trunkside BSA - 950 Option, Trunkside BSA - MTS/WATS Option, Trunkside BSA-101XXXX Option, FGB, FGC or FGD when the first point of switching provides only four-wire terminations.

The transmission path between the point of termination at the customer's premises and the first point of switching may be comprised of any form or configuration of plant capable of and typically used in the telecommunications industry for the transmission of voice and associated telephone signals within the frequency bandwidth of 300 to 3000 Hz.

The interface is provided with loop supervisory signaling. When the interface is associated with Lineside BSA or FGA, such signaling will be loop start or ground start signaling. When the interface is associated with Trunkside BSA - 950 Option, Trunkside BSA - MTS/WATS Option, Trunkside BSA-101XXXX Option, FGB, FGC or FGD, such signaling, except for two-way calling which is E&M signaling, will be reverse battery signaling.

6. Switched Access Service (Cont'd)

6.1 General (Cont'd)

6.1.2 Rate Categories (Cont'd)

(A) Switched Transport (Cont'd)

(6) Interface Groups (Cont'd)

(b) Interface Group 2

Interface Group 2 provides four-wire voice frequency transmission at the point of termination at the customer's premises. The interface is capable of transmission of voice and associated telephone signals within the frequency bandwidth of approximately 300 to 3000 Hz.

The transmission path between the point of termination at the customer's premises and the first point of switching may be comprised of any form or configuration of plant capable of and typically used in the telecommunications industry for the transmission of voice and associated telephone signals within the frequency bandwidth of approximately 300 to 3000 Hz.

The interface is provided with loop supervisory signaling. When the interface is associated with Lineside BSA or FGA, such signaling will be loop start or ground start signaling. When the interface is associated with Trunkside BSA - 950 Option, Trunkside BSA Trunkside BSA - MTS/WATS Option, Trunkside BSA-101XXXX Option, FGB, FGC or FGD, such signaling, except for two-way calling which is E&M signaling, will be reverse battery signaling.

(c) Interface Group 3

Interface Group 3 provides group level analog transmission at the point of termination at the customer's premises. The interface is capable of transmitting electrical signals between the frequencies of 60 to 108 kHz, with the capability to channelize up to 12 voice frequency transmission paths. Certain frequencies within the bandwidth of the Interface Group are reserved for Telephone Company use, e.g., pilot and carrier group alarm tones. Before the first point of switching, the Telephone Company will provide multiplex equipment to derive 12 transmission paths of frequency bandwidth of approximately 300 to 3000 Hz.

6. Switched Access Service (Cont'd)

6.1 General (Cont'd)

6.1.2 Rate Categories (Cont'd)

(A) Switched Transport (Cont'd)

(6) Interface Groups (Cont'd)

(c) Interface Group 3 (Cont'd)

The interface is provided with individual transmission path SF supervisory signaling.

(d) Interface Group 4

Interface Group 4 provides supergroup level analog transmission at the point of termination at the customer's premises. The interface is capable of transmitting electrical signals between the frequencies of 312 to 552 kHz, with the capability to channelize up to 60 voice frequency transmission paths. Certain frequencies within the bandwidth of the Interface Group are reserved for Telephone Company use, e.g., pilot and carrier group alarm tones. Before the first point of switching, the Telephone Company will provide multiplex and channel bank equipment to derive 60 transmission paths of frequency bandwidth of approximately 300 to 3000 Hz.

The interface is provided with individual transmission path SF supervisory signaling.

(e) Interface Group 5

Interface Group 5 provides mastergroup level analog transmission at the point of termination at the customer's premises. The interface is capable of transmitting electrical signals between the frequencies of 564 to 3084 kHz, with the capability to channelize up to 600 voice frequency transmission paths. Certain frequencies within the bandwidth of the Interface Group are reserved for Telephone Company use, e.g., pilot and carrier group alarm tones. Before the first point of switching, the Telephone Company will provide multiplex and channel bank equipment to derive 600 transmission paths of frequency bandwidth of approximately 300 to 3000 Hz.

The interface is provided with individual transmission path SF supervisory signaling.

6. Switched Access Service (Cont'd)

6.1 General (Cont'd)

6.1.2 Rate Categories (Cont'd)

(A) Switched Transport (Cont'd)

(6) Interface Groups (Cont'd)

(f) Interface Group 6

Interface Group 6 provides DS1 level digital transmission at the point of termination at the customer's premises. The interface is capable of transmitting electrical signals at a nominal 1.544 Mbps, with the capability to channelize up to 24 voice frequency transmission paths. Before the first point of switching, when analog switching utilizing analog terminations is provided, the Telephone Company will provide multiplex and channel bank equipment to derive 24 transmission paths of a frequency bandwidth of approximately 300 to 3000 Hz. When digital switching or analog switching with digital carrier terminations is provided, the Telephone Company will provide, at the first point of switching, a DS1 signal in D3/D4 format.

The interface is provided with individual transmission path bit stream supervisory signaling.

(g) Interface Group 7

Interface Group 7 provides DS1C level digital transmission at the point of termination at the customer's premises. The interface is capable of transmitting electrical signals at a nominal 3.152 Mbps, with the capability to channelize up to 48 voice frequency transmission paths. Before the first point of switching, when analog switching utilizing analog terminations is provided, the Telephone Company will provide multiplex and channel bank equipment to derive up to 48 voice frequency transmission paths of a frequency bandwidth of approximately 300 to 3000 Hz. When digital switching or analog switching with digital carrier terminations is provided, the Telephone Company will provide, at the first point of switching, DS1 signals in D3/D4 format.

The interface is provided with individual transmission path bit stream supervisory signaling.

6. Switched Access Service (Cont'd)

6.1 General (Cont'd)

6.1.2 Rate Categories (Cont'd)

(A) Switched Transport (Cont'd)

(6) Interface Groups (Cont'd)

(h) Interface Group 8

Interface Group 8 provides DS2 level digital transmission at the point of termination at the customer's premises. The interface is capable of transmitting electrical signals at a nominal 6.312 Mbps, with the capability to channelize up to 96 voice frequency transmission paths. Before the first point of switching, when analog switching utilizing analog terminations is provided, the Telephone Company will provide multiplex and channel bank equipment in its office to derive up to 96 transmission paths of a frequency bandwidth of approximately 300 to 3000 Hz. When digital switching, or analog switching with digital carrier terminations is provided, the Telephone Company will provide, at the first point of switching, DS1 signals in D3/D4 format.

The interface is provided with individual transmission path bit stream supervisory signaling.

(i) Interface Group 9

Interface Group 9 provides DS3 level digital transmission at the point of termination at the customer's premises. The interface is capable of transmitting electrical signals at a nominal 44.736 Mbps, with the capability to channelize up to 672 voice frequency transmission paths. Before the first point of switching, when analog switching utilizing analog terminations is provided, the Telephone Company will provide multiplex and channel bank equipment to derive up to 672 transmission paths of a frequency bandwidth of approximately 300 to 3000 Hz. When digital switching, or analog switching with digital carrier terminations is provided, the Telephone Company will provide, at the first point of switching, DS1 signals in D3/D4 format.

The interface is provided with individual transmission path bit stream supervisory signaling.

6. Switched Access Service (Cont'd)

6.1 General (Cont'd)

6.1.2 Rate Categories (Cont'd)

(A) Switched Transport (Cont'd)

(6) Interface Groups (Cont'd)

(j) Interface Group 10

Interface Group 10 provides DS4 level digital transmission at the point of termination at the customer's premises. The interface is capable of transmitting electrical signals at a nominal 274.176 Mbps, with the capability to channelize up to 4032 voice frequency transmission paths. Before the first point of switching, when analog switching utilizing analog terminations is provided, the Telephone Company will provide multiplex and channel bank equipment to derive up to 4032 transmission paths of a frequency bandwidth of approximately 300 to 3000 Hz. When digital switching or analog switching with digital carrier terminations is provided, the Telephone Company will provide, at the first point of switching, DS1 signals in D3/D4 format.

The interface is provided with individual transmission path bit stream supervisory signaling.

6. Switched Access Service (Cont'd)

6.1 General (Cont'd)

6.1.2 Rate Categories (Cont'd)

(A) Switched Transport (Cont'd)

(6) Interface Groups (Cont'd)

(k) Available Premises Interface Codes

Following is a matrix showing, for each Interface Group, which premises interface codes are available as a function of the Telephone Company switch supervisory signaling and Feature Group. For explanations of these codes, see the glossary of Channel Interface Codes in 7.3.1 following.

Interface Group	Telephone Company Switch Supervisory Signaling	Premises Interface Code	Switched Access Service 1	2	3	4
1	LO	2LS2	X			
	LO	2LS3	X			
	GO	2GS2	X			
	GO	2GS3	X			
	LO, GO	2DX3	X			
	LO, GO	4EA3-E	X			
	LO, GO	4EA3-M	X			
	LO, GO	6EB3-E	X			
	LO, GO	6EB3-M	X			
	RV, EA, EB, EC	2DX3		X	X	X
	RV, EA, EB, EC	4EA3-E		X	X	X
	RV, EA, EB, EC	4EA3-M		X	X	X
	RV, EA, EB, EC	6EB3-E		X	X	X
	RV, EA, EB, EC	6EB3-M		X	X	X
	EA, EB, EC	6EC3			X	X
	RV	2RV3-O		X	X	X
	RV	2RV3-T		X	X	X
	Out of Band Signaling	2N02				X

(1) Lineside BSA or FGA.
(2) Trunkside BSA - 950 Option or FGB.
(3) Trunkside BSA - MTS/WATS Option or FGC.
(4) Trunkside BSA-101XXXX Option or FGD.

6. Switched Access Service (Cont'd)

6.1 General (Cont'd)

6.1.2 Rate Categories (Cont'd)

(A) Switched Transport (Cont'd)

(6) Interface Groups (Cont'd)

(k) Available Premises Interface Codes (Cont'd)

Interface Group	Telephone Company Switch Supervisory Signaling	Premises Interface Code	Switched Access Service 1	2	3	4
2	LO, GO	4SF2	X			
	LO, GO	4SF3	X			
	LO	4LS2	X			
	LO	4LS3	X			
	LO	6LS2	X			
	GO	4GS2	X			
	GO	4GS3	X			
	GO	6GS2	X			
	LO, GO	4DX2	X			
	LO, GO	4DX3	X			
	LO, GO	6EA2-E	X			
	LO, GO	6EA2-M	X			
	LO, GO	8EB2-E	X			
	LO, GO	8EB2-M	X			
	LO, GO	6EX2-B	X			
	RV, EA, EB, EC	4SF2		X	X	X
	RV, EA, EB, EC	4SF3		X		
	RV, EA, EB, EC	4DX2		X	X	X
	RV, EA, EB, EC	4DX3		X		
	RV, EA, EB, EC	6DX2			X	
	RV, EA, EB, EC	6EA2-E		X	X	X
	RV, EA, EB, EC	6EA2-M		X	X	X
	RV, EA, EB, EC	8EB2-E		X	X	X
	RV, EA, EB, EC	8EB2-M		X	X	X
	EA, EB, EC	8EC2-M			X	X
	RV	4RV2-O		X	X	X
	RV	4RV2-T		X	X	X
	RV	4RV3-O		X	X	
	RV	4RV3-T		X	X	
	Out of Band Signaling	4N02				X

(1) Lineside BSA or FGA.
(2) Trunkside BSA - 950 Option or FGB.
(3) Trunkside BSA - MTS/WATS Option or FGC.
(4) Trunkside BSA-101XXXX Option or FGD.

6. Switched Access Service (Cont'd)

6.1 General (Cont'd)

6.1.2 Rate Categories (Cont'd)

(A) Switched Transport (Cont'd)

(6) Interface Groups (Cont'd)

(k) Available Premises Interface Codes (Cont'd)

Interface Group	Telephone Company Switch Supervisory Signaling	Premises Interface Code	Switched Access Service 1	2	3	4
3	LO, GO	4AH5-B	X			
	RV, EA, EB, EC	4AH5-B		X	X	X
	Out of Band Signaling	4AH5-B				X
4	LO, GO	4AH6-C	X			
	RV, EA, EB, EC	4AH6-C		X	X	X
	Out of Band Signaling	4AH6-C				X
5	LO, GO	4AH6-D	X			
	RV, EA, EB, EC	4AH6-D		X	X	X
	Out of Band Signaling	4AH6-D				X
6	LO, GO	4DS9-15	X			
	RV, EA, EB, EC	4DS9-15		X	X	X
	Out of Band Signaling	4DS9-15				X
	64CCC	4DS9-15S				X
		4DS9-1S				X

(1) Lineside BSA or FGA.
(2) Trunkside BSA - 950 Option or FGB.
(3) Trunkside BSA - MTS/WATS Option or FGC.
(4) Trunkside BSA-101XXXX Option or FGD.

6. Switched Access Service (Cont'd)

6.1 General (Cont'd)

6.1.2 Rate Categories (Cont'd)

(A) Switched Transport (Cont'd)

(6) Interface Groups (Cont'd)

(k) Available Premises Interface Codes (Cont'd)

Interface Group	Telephone Company Switch Supervisory Signaling	Premises Interface Code	Switched Access Service 1	2	3	4
7	LO, GO	4DS9-31	X			
	LO, GO	4DS9-31L	X			
	RV, EA, EB, EC	4DS9-31		X	X	X
	RV, EA, EB, EC	4DS9-31L		X	X	X
	Out of Band Signaling	4DS9-31				X
8	LO, GO	4DS0-63	X			
	LO, GO	4DS0-63L	X			
	RV, EA, EB, EC	4DS0-63		X	X	X
	RV, EA, EB, EC	4DS0-63L		X	X	X
	Out of Band Signaling	4DS0-63				X
9	LO, GO	4DS6-44	X			
	LO, GO	4DS6-44L	X			
	RV, EA, EB, EC	4DS6-44		X	X	X
	RV, EA, EB, EC	4DS6-44L		X	X	X
	Out of Band Signaling	4DS6-44				X
	64CCC	4DS6-44				X
10	LO, GO	4DS6-27	X			
	LO, GO	4DS6-27L	X			
	RV, EA, EB, EC	4DS6-27		X	X	X
	RV, EA, EB, EC	4DS6-27L		X	X	X
	Out of Band Signaling	4DS6-27				X

(1) Lineside BSA or FGA.
(2) Trunkside BSA - 950 Option or FGB.
(3) Trunkside BSA - MTS/WATS Option or FGC.
(4) Trunkside BSA-101XXXX Option or FGD.

6. Switched Access Service (Cont'd)

6.1 General (Cont'd)

6.1.2 Rate Categories (Cont'd)

(A) Switched Transport (Cont'd)

(6) Interface Groups (Cont'd)

(l) Out of Band Signaling Connection

Premises Interface Codes

Common Channel Signaling Access Service is provided with Trunkside BSA-101XXXX Option and Feature Group D equipped with out of band signaling and/or Billing Validation Service. The associated out of band signaling connections are provided using Interface Groups 6 through 10. Following is a matrix for Interface Groups 6 through 10 showing which premises interface codes are available for signaling connections as a function of the out of band signaling level of digital transmission. These codes also apply for Collocated Interconnected arrangements.

Interface Groups	Level of Transmission	Premises Interface Codes
6	DS1	4DS9-15
7	DS1C	4DS9-31
8	DS2	4DS0-63
9	DS3	4DS6-44
10	DS4	4DS6-27

(7) Nonchargeable Optional Features

Where transmission facilities permit, the Telephone Company will, at the option of the customer, provide the following nonchargeable optional features in association with Switched Transport.

6. Switched Access Service (Cont'd)

6.1 General (Cont'd)

6.1.2 Rate Categories (Cont'd)

(A) Switched Transport (Cont'd)

(7) Nonchargeable Optional Features (Cont'd)

(a) Supervisory Signaling

Where the transmission parameters permit, and where signaling conversion is required by the customer to meet its signaling capability, the customer may order an optional supervisory signaling arrangement for each transmission path provided as follows:

- For Interface Groups 1 and 2

  DX Supervisory Signaling,
  E&M Type I Supervisory Signaling,
  E&M Type II Supervisory Signaling, or
  E&M Type III Supervisory Signaling

- For Interface Group 2

  SF Supervisory Signaling, or
  Tandem Supervisory Signaling

- For Interface Groups 6 through 10

  These Interface Groups may, at the option of the customer, be provided with individual transmission path SF supervisory signaling where such signaling is available in Telephone Company central office. Generally such signaling is available only where the entry switch provides an analog, i.e., non-digital, interface to the transport termination.

  These optional supervisory signaling arrangements are not available in combination with Trunkside BSA-101XXXX Option or FGD with out of band signaling.

6. Switched Access Service (Cont'd)

6.1 General (Cont'd)

6.1.2 Rate Categories (Cont'd)

(A) Switched Transport (Cont'd)

(7) Nonchargeable Optional Features (Cont'd)

(b) Customer Specified Entry Switch Receive Level

This feature allows the customer to specify the receive transmission level at the first point of switching. The range of transmission levels which may be specified is described in Technical Reference GR-334-CORE, Issue 1. This feature is available with Interface Groups 2 through 10 for Lineside BSA, and Trunkside BSA - 950 Option and Feature Groups A and B.

(c) Customer Specification of Switched Transport Termination

This option allows the customer to specify, for Trunkside BSA - 950 Option or Feature Group B routed directly to an end office or access tandem, a four-wire termination of the Switched Transport at the entry switch in lieu of a Telephone Company selected two-wire termination. This option is available only when the Trunkside BSA - 950 Option or Feature Group B arrangement is provided with Type B Transmission Specifications.

(d) Switched Transport Re-Route Option

Customers may, at no charge and at their option, subject to the following criteria, convert existing tandem routed trunks to end office direct routed trunks.

Conversions from tandem routing to end office direct routing will be performed at no charge if the order is placed by December 31, 1998.

(1) The number of trunks connected cannot exceed the number of trunks disconnected except as provided below, i.e., a one-for-one substitution of end office trunks for tandem trunks. In cases where the customer requests the installation of additional trunks greater than the number disconnected, the customer must provide usage data, and an engineering table capacity evaluation, justifying the requirement for additional trunks.

6. Switched Access Service (Cont'd)

6.1 General (Cont'd)

6.1.2 Rate Categories (Cont'd)

(A) Switched Transport (Cont'd)

(7) Nonchargeable Optional Features (Cont'd)

(d) Switched Transport Re-Route Option (Cont'd)

(2) The customer's order for the Switched Transport Re-route option will be scheduled on a project basis by the Telephone Company in cooperation with the customer.

(3) Additional trunks installed beyond those specified or provided for in (1) preceding, will be subject to full nonrecurring installation charges.

(4) The technical specifications of the tandem trunk, e.g., interface type, must be retained when the trunk is connected at the end office or tandem, unless otherwise mutually agreed upon by the Telephone Company and the customer when appropriate Telephone Company central office switching equipment and other facilities exist.

(5) This option may not be scheduled at the same time as an upgrade to Trunkside BSA-101XXXX Option or FGD with out of band signaling unless otherwise mutually agreed upon by the Telephone Company and the customer when appropriate Telephone Company central office switching equipment and other facilities exists. If requests for the Switched Transport Re-Route Option are to be combined with a conversion to out of band signaling at the same time, the Telephone Company may treat such requests as two separate projects and charges will be waived subject to the above and as specified in section 6.1.2(A)(7)(e)(5) following.

(6) The same customer facilities must be maintained on the connect order for the end office or tandem routed trunks, unless mutually agreed upon by the Telephone Company and the customer when appropriate Telephone Company central office switching equipment and other facilities exists.

6. Switched Access Service (Cont'd)

6.1 General (Cont'd)

6.1.2 Rate Categories (Cont'd)

(A) Switched Transport (Cont'd)

(7) Nonchargeable Optional Features (Cont'd)

(d) Switched Transport Re-Route Option (Cont'd)

(7) In connection with a request for Switched Transport Re-Route Option and subject to availability of Telephone Company central office switching equipment and facilities, Trunkside BSA - 950 Option or FGB trunks may be upgraded to Trunkside BSA-101XXXX Option or FGD trunks provided the customer requests MF signaling on the Trunkside BSA-101XXXX Option or FGD order, and complies with the specifications as set forth in 6.1.2(A)(7)(d) preceding. Conversion from tandem or end office routed Trunkside BSA -950 Option or FGB trunks to end office or tandem routed Trunkside BSA-101XXXX Option or FGD trunks with MF signaling will be scheduled on a project basis by the Telephone Company, in cooperation with the customer.

(8) The orders for the disconnect and connection of trunks shall be placed with the Telephone Company at the same time. The Telephone Company will disconnect the tandem or end office routed trunks at the same time as the connection of the end office or tandem routed trunks, unless otherwise negotiated, but in no case to exceed 90 days after the connection of the end office or tandem routed trunks.

(9) Subject to the conditions above and the availability of Telephone Company central office switching equipment and facilities, the customer may change one-way trunks to two-way trunks provided two-way is specified on the connect order for the end office or tandem routed trunks.

6. Switched Access Service (Cont'd)

6.1 General (Cont'd)

6.1.2 Rate Categories (Cont'd)

(A) Switched Transport (Cont'd)

(7) Nonchargeable Optional Features (Cont'd)

(e) Out of Band Signaling

(1) This ordering option allows the customer to exchange signaling for Trunkside BSA- 101XXXX Option and Feature Group D call set-up over a communications path which is separate from the message path. This option is provided with SS7 protocol and is only available with Trunkside BSA-101XXXX Option and Feature Group D. This option requires the establishment of a Common Channel Signaling Access Service between the customer's SPOI and the Telephone Company's STP as specified in 6.4.3(A) following.

(2) Out of band signaling is provided in both the originating and terminating direction on Trunkside BSA-101XXXX Option and FGD service.

Each signaling connection is provisioned for two-way transmission of out of band signaling information.

(3) Customers ordering out of band signaling are subject to the requirements specified in 2.3.9 and 2.3.10(A) preceding.

(4) Out of band signaling is subject to the rates and charges as specified in 6.8.1(C)(2), 6.9.1(E), and 6.9.1(G) following.

6. Switched Access Service (Cont'd)

6.1 General (Cont'd)

6.1.2 Rate Categories (Cont'd)

(A) Switched Transport (Cont'd)

(7) Nonchargeable Optional Features (Cont'd)

(e) Out of Band Signaling (Cont'd)

(5) Conversion from MF signaling to SS7 signaling or from SS7 signaling to 64 Clear Channel Capability (64CCC) is not subject to charges as specified in section 6.8.1(C)(2) following. These conversions will be performed at Telephone Company access tandems and end offices designated as having SS7 or 64CCC. The number of trunks converted to SS7 signaling cannot exceed the number of trunks with MF signaling that are converted, and the number of trunks converted to 64CCC cannot exceed the number of trunks with MF or SS7 signaling that are converted. The customer must retain the same technical interface specifications unless otherwise mutually agreed upon by the Telephone Company and the customer, when appropriate Telephone Company central office switching equipment and other facilities exists. Conversion of tandem or end office trunks from MF signaling to SS7 signaling or from SS7 signaling to 64CCC will be scheduled on a project basis by the Telephone Company, in cooperation with the customer.

(6) At the customer's request, the Telephone Company will modify Trunkside BSA- 101XXXX Option and FGD with out of band signaling to accept SS7 signaling messages and protocol contained in GR-905-CORE, Issue 11, pursuant to successful completion of testing specified in section 6.4.3(A), following.

(7) 64 Clear Channel Capability (64CCC) will be provided in connection with Trunkside BSA-101XXXX Option and FGD with out of band signaling digital trunk facilities provisioned at Interface Group 6 or 9, where appropriate Telephone Company equipment and other facilities exist.

6. Switched Access Service (Cont'd)

6.1 General (Cont'd)

6.1.2 Rate Categories (Cont'd)

(A) Switched Transport (Cont'd)

(7) Nonchargeable Optional Features (Cont'd)

(e) Out of Band Signaling (Cont'd)

(8) 64CCC is provided through the use of Bipolar with Eight-Zeros Substitution line code which must be provided in both directions of transmission. 64CCC will be provisioned on T1 facilities whose digital transmission signaling is framed in the Extended Superframe Format. The same framing format must be used in both directions of transmission. Technical Reference GR-334-CORE, Issue 1, provides the technical specifications for 64CCC.

(9) 64CCC requires the establishment of CCSAS as specified in section 6.4.3(A) following. The CCS/SS7 protocol requirements for 64CCC are specified in GR-905-CORE Issue 11. When 64CCC is ordered, the Telephone Company will schedule additional network compatibility and other operational tests as specified in section 6.4.3(A) following.

(8) Chargeable Optional Features

(a) Toll Free Data Base Access Service

(1) Toll Free Basic Query Charge

The basic query charge is assessed the customer based on the query of the Toll Free number delivered to the customer. The query is completed when the appropriate call routing information is returned, as described in 6.4.3(C) following. The query charge is assessed for all completed queries whether or not the actual Toll Free call is delivered to the customer.

6. Switched Access Service (Cont'd)

6.1 General (Cont'd)

6.1.2 Rate Categories (Cont'd)

(A) Switched Transport (Cont'd)

(8) Chargeable Optional Features (Cont'd)

(a) Toll Free Data Base Access Service (Cont'd)

(2) Toll Free Vertical Feature Package Charge

The vertical feature package charge is assessed the customer when, in addition to the basic query, a Toll Free Data Base query contains one, all, or any combination of the vertical features as described in 6.4.3(C) following.

(3) 500 Query Charge

The query charge is assessed the customer based on the query of the 500+NXX number dialed and/or delivered to the customer in conjunction with 500 Access Service. 500+NXX calls delivered to the customer are routed based on information derived via queries to the 500 Data Base. In cases where certain end offices are not equipped with 500 NXX query functionality, certain 0+500 dialed calls are delivered to the customer from a Telephone Company Operator Switch.

(b) Multiplexing

Multiplexing provides the capability of converting the capacity or bandwidth of a facility from a higher level to a lower level or from a lower level to a higher level. Multiplexing arrangements available for Entrance Facilities and Direct Trunked Transport facilities are described in (1) and (2) following. Rates and charges are set forth in Section 6.9 following.

When the customer requests Tandem Switched Transport and Direct Trunked Transport to connect to the same Entrance Facility, multiplexing is required at the SWC and must be ordered by the customer as a chargeable optional feature of the Entrance Facility as set forth in (1) and/or (2) following.

6. Switched Access Service (Cont'd)

6.1 General (Cont'd)

6.1.2 Rate Categories (Cont'd)

(A) Switched Transport (Cont'd)

(8) Chargeable Optional Features (Cont'd)

(b) Multiplexing (Cont'd)

Chargeable multiplexing arrangements ordered with an Entrance Facility at a SWC or a Direct Trunked Transport facility at an end office are associated with the facility with the higher capacity or bandwidth (e.g., a DS1 to Voice Grade multiplexing arrangement is associated with the facility using a DS1 connection).

(1) DS1 to Voice Grade

An arrangement that converts a DS1 channel to twenty-four Voice Grade channels utilizing time division multiplexing. For example, the customer has the option of ordering a DS1 to Voice Grade multiplexing for the Entrance Facility at the SWC when Voice Grade Direct-Trunked Transport is requested to an end office. A DS1 to Voice Grade multiplexing is required at the end office when the customer orders Lineside Access which is transported via a DS1 Direct-Trunked Transport facility.

(2) DS3 to DS1

An arrangement which converts a DS3 channel to twenty-eight DS1 channels utilizing time division multiplexing. The twenty-eight channels may be further multiplexed utilizing DS1 to Voice Grade multiplexers. DS3 to DS1 multiplexing is available as a chargeable optional feature for Entrance Facilities and Direct Trunked Transport facilities. DS3 to DS1 multiplexing is always required at the SWC of the customer's premises when a DS3 Entrance Facility is to connect to a lower level of capacity.

6. Switched Access Service (Cont'd)

6.1 General (Cont'd)

6.1.2 Rate Categories (Cont'd)

(A) Switched Transport (Cont'd)

(8) Chargeable Optional Features (Cont'd)

(c) Alternate Serving Wire Center (Cont'd)

(1) Alternate Serving Wire Center (ASWC) is an optional feature which provides a transmission path for a High Capacity Service between the customer's designated premises and a serving wire center separate from the normal serving wire center.

(2) The Telephone Company will designate the serving wire center to be used as the alternate. The ASWC feature is available where contiguous wire centers with adjacent fiber feeder routes exist. Where facilities are not available, Special Construction rates and regulations may apply as set forth in the appropriate Special Construction tariff. Where service is available, provisioning is based on a Negotiated Interval as described in 5.2.1(B) preceding.

(3) The rate for Alternate Serving Wire Center, as specified in 6.9.1(E) following, applies per point of termination and is in addition to the entrance facility and Channel Mileage Rates and Charges for each High Capacity service provided over the alternate path. Channel mileage for the alternately routed service is based on mileage measured from or to the alternate serving wire center. Section 6 contains rate regulations specific to Shared Network Arrangements.

(d) Special Facilities Routing

A customer may request that the facilities used to provide Switched Transport Service be specially routed. The regulations, rates and charges for Special Facilities Routing (i.e., Diversity) are set forth in Section 11 following.

6. Switched Access Service (Cont'd)

6.1 General (Cont'd)

6.1.2 Rate Categories (Cont'd)

(A) Switched Transport (Cont'd)

(8) Chargeable Optional Features (Cont'd)

(e) Diversity

Diversity denotes that a service must be provided over not more than two different physical routes. The rates for Diversity as specified in 6.9.1(F) following, applies per entrance facility, and is in addition to the entrance facility and channel mileage rates and charges for each high capacity service.

(f) Shared Network Arrangement

(1) A Shared Network Arrangement is a service offering that enables a customer (the "Service User") to connect subtending services to the multiplexed High Capacity service or IntelliMux^{sm} service of another customer (the "Host Subscriber"), with the Telephone Company maintaining separate records and billing for each. Each customer will be billed for those rate elements associated with his own portion of the service configuration. Under no circumstances will the rates or charges for individual rate elements be split. This offering is limited to service configurations where a Service User obtains either subtending Voice Grade or Data Digital circuits from a Host's multiplexed DS1 service, or DS1 circuits from a Host's multiplexed DS3 service.

(2) Under the Shared Network Arrangement, the telephone company may share with the host subscriber record information pertaining to the services of other users of the shared network. Such disclosure will be under the sole discretion of the telephone company as is necessary to perform billing reconciliations and/or other functions required in connection with maintaining account records.

(3) Section 6.8.20 contains rate regulations specific to Shared Network Arrangements

6. Switched Access Service (Cont'd)

6.1 General (Cont'd)

6.1.2 Rate Categories (Cont'd)

(B) End Office

The End Office rate category provides the local end office switching and end user termination functions necessary to complete the transmission of Switched Access communications to and from the end users served by the local end office. The End Office rate category includes the Local Switching and Information (i.e., Directory Assistance) rate elements. Directory Assistance Service and the applicable rates for it are set forth in Section 9 following.

(1) Local Switching

The Local Switching rate element provides for the use of end office switching equipment, terminations for the end user lines terminating in the local end office, and for the termination of calls at a Telephone Company Intercept operator or recording.

There are two categories, or rate levels, associated with Local Switching. The first category, LS1, provides the functions described preceding for Lineside BSA, Trunkside BSA - 950 Option and Feature Groups A and B, except when Trunkside BSA-950 Option* or FGB is subscribed to by a provider of MTS and WATS.

The second category, LS2, provides the functions described preceding for Trunkside BSA - MTS/WATS Option, Trunkside BSA-101XXXX Option and Feature Groups C and D, and for Trunkside BSA-950 Option* or FGB when subscribed to by a provider of MTS and WATS, and Trunkside BSA-101XXXX Option and FGD used to carry originating Telecommunication Relay Service traffic.

LS2 rates apply to dedicated access lines, e.g., WATS Access Line Service, when such lines are terminated in end office switches and are used in conjunction with switched access services, and in conjunction with Trunkside BSA-950 Option* or FGB when subscribed to by a provider of MTS and WATS.

The Local Switching rates for Lineside BSA, Trunkside BSAs and Feature Groups are applied on a per minute of use basis and are offered in two categories, LS1 and LS2.

6. Switched Access Service (Cont'd)

6.1 General (Cont'd)

6.1.2 Rate Categories (Cont'd)

(B) End Office (Cont'd)

(1) Local Switching (Cont'd)

(a) LS1 provides local dial switching functions for Lineside BSA, Trunkside BSA - 950 Option and Feature Groups A and B except for Lineside BSA, Trunkside BSA - 950 Option and Feature Groups A and B used to terminate traffic to a WATS Access Line (WAL) provided from an equal access end office, or when Trunkside BSA-950 Option or FGB is subscribed to by provider of MTS and WATS.

(b) LS2 provides local dial switching functions for Trunkside BSA - MTS/WATS Option, Trunkside BSA- 101XXXX Option and Feature Groups C and D and for Lineside BSA, Trunkside BSA - 950 Option and Feature Groups A and B used to terminate traffic to a WAL provided from an equal access end office, for 500 Access Service, Toll Free Data Base Access Service, and 900 Access Service traffic originating from or terminating to an equal access end office, and for 500 Access Service, Toll Free Data Base Access Service, and 900 Access Service and Trunkside BSA - 950 Option and Feature Group B traffic originating from and Trunkside BSA-101XXXX Option and Feature Group D traffic terminating to end offices not equipped with equal access capabilities when the customer elects to combine such traffic with its tandem routed Trunkside BSA-101XXXX Option or Feature Group D traffic, or in conjunction with Trunkside BSA-950 Option or FGB when subscribed to by a provider of MTS and WATS, and for Trunkside BSA-101XXXX Option and for FGD Service used in conjunction with Telecommunication Relay Service Center traffic. Where end offices are appropriately equipped, international dialing may also be provided as a capability of LS2 local dial switching functions for Trunkside BSA - MTS/WATS Option, Trunkside BSA-101XXXX Option and Feature Groups C and D, i.e., the capability of switching international calls with service prefix and address codes having more digits than can be switched through a standard Trunkside BSA - MTS/WATS Option, Trunkside BSA-101XXXX Option or Feature Groups C or D end office.

6. Switched Access Service (Cont'd)

6.1 General (Cont'd)

6.1.2 Rate Categories (Cont'd)

(B) End Office (Cont'd)

(1) Local Switching (Cont'd)

Rates for LS1 - Lineside BSA, Trunkside BSA - 950 Option and Feature Groups A and B, LS2 - Trunkside BSA - MTS/WATS Option, Trunkside BSA-101XXXX Option and Feature Groups C and D, and Transitional - Lineside BSA, Trunkside BSA - 950 Option and Feature Groups A and B are set forth in 6.9.2(A) following. The application of these rates is as set forth in 6.8.1(D) following.

Local Switching Shared End Office Trunk Port

The Local Switching Shared End Office Trunk Port minutes-of-use rate provides for the use of the shared end office trunk ports for termination of common transport trunk, and/or FGA access minutes at an end office.

Local Switching Dedicated End Office Trunk Port

The Local Switching Dedicated End Office Trunk Port monthly rate provides for termination of a dedicated trunk in the end office port. The rate is assessed per activated trunk for all trunkside services, per analog or digital end office.

(c) End Office Switching Equipment

Where end offices are appropriately equipped, international dialing may be provided as a capability associated with LS2. International dialing provides the capability of switching international calls with service prefix and address codes having more digits than are capable of being switched through a standard Trunkside BSA - MTS/WATS Option, Trunkside BSA-101XXXX Option, FGC or FGD equipped end office.

6. Switched Access Service (Cont'd)

6.1 General (Cont'd)

6.1.2 Rate Categories (Cont'd)

(B) End Office (Cont'd)

(1) Local Switching (Cont'd)

(c) End Office Switching Equipment (Cont'd)

There are two types of switching functions performed in the end office, i.e., Common Switching functions and Transport Termination functions. These are described following:

- Common Switching

Common Switching provides the local end office switching functions associated with the various access (i.e., Feature Group Services, Lineside and Trunkside BSAs) switching arrangements. The Common Switching arrangements provided for the various Switched Access arrangements are described in 6.2 following.

Included as part of the Common Switching are various nonchargeable optional features which the customer can order to meet the customer's specific communications requirements. These optional features are described in 6.4.1 following.

- Transport Termination

Transport Termination provides for the line or trunk side arrangements which terminate the Switched Transport facilities. Included as part of Transport Termination are various nonchargeable optional termination arrangements. These optional terminating arrangements are described in 6.4.2 following.

The number of transport terminations provided will be determined by the Telephone Company as set forth in 6.6.6 following.

6. Switched Access Service (Cont'd)

6.1 General (Cont'd)

6.1.2 Rate Categories (Cont'd)

(B) End Office (Cont'd)

(1) Local Switching (Cont'd)

(d) Line Termination

The Line Termination function provides the terminations for the end user lines terminating in the local end office. There are two types of Line Terminations, i.e., Common Line Terminations and WATS Access Line Terminations.

The WATS Access Line Service, Line Terminations are differentiated by line side vs. trunk side terminations. The standard WATS Access Line Service arrangement is available with a line side termination. There are various types of originating and terminating line side terminations depending on the type of signaling associated with the WATS Access Line (i.e., loop start or ground start). In addition, there are also two types of originating and terminating WATS Access Line trunk side terminations that are available in lieu of standard line side terminations. Trunk side terminations are provided only in association with certain Line Termination optional features as specified following:

- Dialed Number Identification Service (DNIS)

The Dialed Number Identification Service optional feature, which is available with terminating only WATS Access Lines, permits a customer's end user with multiple Toll Free Data Base Access Service telephone numbers in the same service group to identify the specific telephone number which was dialed by the calling party. Identification is accomplished by outpulsing four digits which distinguish the dialed Toll Free Data Base Access Service number to customer premises equipment at the end user's premises. The digits are outpulsed to the end user premises over the WATS Access Connection. All WATS Access Line Connections in the same service group must be equipped for DNIS. The number of dialable Toll Free Data Base Access Service telephone numbers accessing a service group equipped for DNIS cannot exceed the number of WATS Access Lines in the service group.

6. Switched Access Service (Cont'd)

6.1 General (Cont'd)

6.1.2 Rate Categories (Cont'd)

(B) End Office (Cont'd)

(1) Local Switching (Cont'd)

(d) Line Termination

- Dialed Number Identification Service (DNIS) (Cont'd)

DNIS is provided with reverse battery type supervisory signaling and requires battery type supervisory signaling and requires the use of trunk side terminations in lieu of standard line side terminations.

DNIS is a non chargeable optional feature.

- WATS Answer Supervision

WATS originating only Access Connections may, at the option of the customer be ordered with WATS Answer Supervision. When the terminating end answers, provided the Interexchange Carrier passes Answer Supervision to the Exchange Carrier, Answer Supervision will provide a signal to the originating end user that the distant end has answered. The exact timing of Answer Supervision is dependent upon the Interexchange Carrier. Answer Supervision is available with both two and four wire WATS Access Lines and is arranged for Wink reverse battery supervision on MF signaling. Answer Supervision is subject to the rates in 6.9.2(A)(4) following.

(e) Intercept

The Intercept function provides for the termination of a call at a Telephone Company Intercept operator or recording. The operator or recording tells a caller why a call, as dialed, could not be completed, and if possible, provides the correct number.

6. Switched Access Service (Cont'd)

6.1 General (Cont'd)

6.1.2 Rate Categories (Cont'd)

(B) End Office (Cont'd)

(2) Equal Access Recovery Charge

The Equal Access Recovery Charge is a charge to recover those costs that the Telephone Companies incur solely for equal access. Equal access costs represent the cost of equipping switching machines to handle Trunkside BSA-101XXXX Option and FGD.

The Equal Access Recovery Charge is assessed to the customer based on the total number of Trunkside BSA-101XXXX Option and Feature Group D access trunks. The application of these rates with respect to each Trunkside BSA-101XXXX Option and Feature Group D trunk is as set forth in 6.9.4 following.

(3) Information Surcharge

The Information Surcharge is a charge to recover costs that have been assigned to the interstate Information category through Parts 36 and 69 of the Commission's Rules. These costs are other than those incurred in the provision of interstate Directory Assistance Service as set forth in 9. following.

The Information Surcharge is assessed to the customer based on the total number of access minutes. The rates are set forth in 6.9.5 following. The application of these rates with respect to the individual Feature Groups is as set forth in 6.8.1(D) following.

(4) Toll Free Access Service Nonrecurring Charge

The Toll Free Access Service nonrecurring charge is assessed to the customer based on NXXs activated, or deactivated, in conjunction with Toll Free Access Service. The charge varies depending on how the customer orders NXXs activated or deactivated, i.e., by State or LATA. When ordered by LATA, for both NXXs activated and deactivated, each NXX in the LATA is subject to the charge. Subsequent orders for those NXXs to be activated or deactivated in a different LATA will again be subject to the charge. When ordered by State, for both NXXs activated or deactivated, the charge applies for each NXX only once even if multiple LATAs are involved.

6. Switched Access Service (Cont'd)

6.1 General (Cont'd)

6.1.2 Rate Categories (Cont'd)

(B) End Office (Cont'd)

(5) 900 Access Service Nonrecurring Charge

The 1+900 Access Service nonrecurring charge is assessed to the customer based on NXX codes activated, or deactivated, in conjunction with 900 Access Service. The charge varies depending on how the customer orders NXXs activated or deactivated, i.e., by State or LATA. When ordered on a LATA basis, for both NXXs activated and deactivated, each NXX in the LATA is subject to the charge. If subsequent orders activate or deactivate NXX codes previously ordered in a different LATA, the nonrecurring charge still applies to the NXX codes activated or deactivated on the subsequent order.

The 0+900 Access Service nonrecurring charge is assessed to the customer based on end offices activated in conjunction with 900 Access Service.

(6) Switched 56 Kilobit Charge

The Switched 56 Kilobit charge is assessed to the customer based on the total number of Switched 56 Kilobit access minutes. Switched 56 Kilobit access minutes are those access minutes transported via separate Switched 56 Kilobit trunks as specified in 6.2.4(A)(5) following.

(7) Operator Transfer Service Charge

The Operator Transfer Service charge is assessed the customer based on the number of 0 minus calls transferred to the customer by the Telephone Company operator, i.e., the customer's end user dials only the 0 digit with no additional digits. Rates and charges are set forth in Section 6.9.8 following.

The Operator Transfer Service charge recovers the costs associated with operator functions required to transfer end users to the customer of choice for operator services.

6. Switched Access Service (Cont'd)

6.1 General (Cont'd)

6.1.3 Special Facilities Routing

Any customer may request that the facilities used to provide Switched Access Service be specially routed. The regulations, rates and charges for Special Facilities Routing (i.e., Avoidance, Diversity and Cable-Only) are as set forth in 11. following.

6.1.4 Design Layout Report

At the request of the customer, the Telephone Company will provide to the customer the makeup of the facilities and services provided from the customer's premises to the first point of switching. This information will be provided in the form of a Design Layout Report. The Design Layout Report will be provided to the customer at no charge, and will be reissued or updated whenever these facilities are materially changed.

6.1.5 Acceptance Testing

At no additional charge, the Telephone Company will, at the customer's request, cooperatively test, at the time of installation, the following parameters: loss, C-notched noise, C-message noise, 3-tone slope, d.c. continuity and operational signaling. When the Switched Transport is provided with interface Groups 2 through 10 and the Transport Termination is two-wire (i.e., there is a four-wire to two-wire conversion in Switched Transport), balance parameters (equal level echo path loss) may also be tested.

6.1.6 Ordering Options and Conditions

Switched Access Service is ordered under the Access order provisions set forth in 5. preceding. Also, included in that Section are other charges which may be associated with ordering Switched Access Service (e.g., Service Date Change Charges, Cancellation Charges, etc.).

6. Switched Access Service (Cont'd)

6.2 Provision and Description of Switched Access Service Arrangements

Switched Access Feature Group Service is provided in different service arrangements; Feature Group A through D. The provision of each arrangement requires Switched Transport facilities and the appropriate End Office functions. In addition, WATS Access Lines Service as described in 7.2.3(E) following may, at the option of the customer, be provided for use with Feature Groups A, B, C and D.

There are three specific transmission specifications (i.e., Types A, B and C) that have been identified for the provision of Switched Access Arrangements. The specifications provided are dependent on the Interface Group and the routing of the service, i.e., whether the service is routed directly to the end office or via an access tandem. The parameters for the transmission specifications are set forth in 6.5.1 following.

Feature Groups are arranged for either originating, terminating or two-way calling, based on the customer end office switching capacity ordered, while 500 Access Service, Toll Free Data Base Access Service, and 900 Access Service are arranged for originating only. Originating calling permits the delivery of calls from Telephone Exchange Service locations to the customer's premises. Terminating calling permits the delivery of calls from the customer's premises to Telephone Exchange Service locations. Two-way calling permits the delivery of calls in both directions, but not simultaneously. The Telephone Company will determine the type of calling to be provided unless the customer requests that a different type of directional calling is to be provided. In such cases, the Telephone Company will work cooperatively with the customer to determine the directionality.

For Telephone Company provided facilities between an access tandem and a TRS Center, calls will be delivered only in the originating direction. For calls originating from a TRS Center routed through an access tandem, access minutes of use will be reported by the TRS provider until the Telephone Company attains the appropriate measurement capabilities.

There are various nonchargeable optional and chargeable optional features available with the Switched Access Arrangements. These additional optional features are provided as Switched Transport, Common Switching, Transport Termination or Line Termination Options.

Following are detailed descriptions of each of the available Feature Groups. Each is described in terms of its specific physical characteristics and calling patterns, the transmission specifications with which it is provided, the optional features available for use with it and the standard testing capabilities.

The Common Switching and Transport Termination optional features, which are described in 6.4 following, are available at all Telephone Company end office switches, unless specifically stated otherwise.

6. Switched Access Service (Cont'd)

6.2 Provision and Description of Switched Access Service Arrangements (Cont'd)

6.2.1 Feature Group A (FGA)

(A) Description

(1) FGA is provided in connection with Telephone Company electronic and electromechanical end offices. At the option of the customer, FGA is provided on a single or multiple line group basis and is arranged for originating calling only, terminating calling only, or two-way calling. FGA is arranged for use by the customer in the provision of its FX/ONAL service or MTS/WATS-type service.

(2) FGA provides a line side termination at the first point of switching. The line side termination will be provided with either ground start supervisory signaling or loop start supervisory signaling. The type of signaling is at the option of the customer.

(3) The Telephone Company shall select the first point of Switching, within the selected LATA, at which the lineside termination is to be provided unless the customer requests a different first point of switching and Telephone Company facilities and measurement capabilities are available to accommodate such a request. Feature Group A service will only be provided in switch types with technical capabilities to provide terminating call screening and individualized call billing detail for both originating and terminating traffic existing. FGA customers (Service in place prior to January 1, 1986) provided service out of offices not possessing these technical capabilities may retain their existing services and may continue to add or subtract lines. The assumed minute of use figures as specified in 6.8.8 following, effective January 1, 1986, apply.

(4) Entrance facilities are required between the serving wire center and an interexchange carrier's point of presence, or to a Telephone Company provided interstate transport capability, and the customer shall provide the connecting facility assignment (CFA) information, as defined in Section 2.6 preceding, using the industry standard Common Language Facility Identification. The CFA must include channel assignment information necessary to connect the FGA service to the interstate network.

6. Switched Access Service (Cont'd)

6.2 Provision and Description of Switched Access Service Arrangements (Cont'd)

6.2.1 Feature Group A (FGA) (Cont'd)

(A) Description (Cont'd)

(5) For existing FGA service installed prior to February 24, 1997, connecting facility assignment information is not required. This information must be provided if any changes or rearrangements are requested for the existing services.

(6) A seven digit local telephone number assigned by the Telephone Company is provided for access to FGA switching in the originating direction. The seven digit local telephone number will be associated with the selected end office switch and is of the form NXX-XXXX.

If the customer requests a specific seven digit telephone number that is not currently assigned, and the Telephone Company can, with reasonable effort, comply with that request, the requested number will be assigned to the customer.

(7) FGA switching, when used in the terminating direction, is arranged with dial tone start-dial signaling. When used in the terminating direction FGA switching may, at the option of the customer, be arranged for dial pulse or dual tone multifrequency address signaling, subject to availability of equipment at the first point of switching. When FGA switching is provided in a hunt group or uniform call distribution arrangement, all FGA switching will be arranged for the same type of address signaling.

(8) No address signaling is provided by the Telephone Company when FGA switching is used in the originating direction. Address signaling in such cases, if required by the customer, must be provided by the customer's end user using inband tone signaling techniques. Such inband tone address signals will not be regenerated by the Telephone Company and will be subject to the ordinary transmission capabilities of the Local Transport provided.

6. Switched Access Service (Cont'd)

6.2 Provision and Description of Switched Access Service Arrangements (Cont'd)

6.2.1 Feature Group A (FGA) (Cont'd)

(A) Description (Cont'd)

(9) FGA switching, when used in the terminating direction, may be used to access valid NXXs in the LATA, local operator service (0- and 0+), directory assistance (411 or 555-1212, whichever is available), emergency reporting service (911), exchange telephone repair ((800) 275-2355 where available), time or weather announcement services of the Telephone Company, community information services of an information service provider, and other customers' services (by dialing the appropriate digits). Charges for FGA terminating calls requiring operator assistance on calls to (800) 275-2355 or 911 will only apply where sufficient call details are available. Additional non-access charges will also be billed on a separate account for (1) an operator surcharge, as set forth in the general services tariffs, for local operator assistance (0- and 0+) calls, (2) calls to certain community information services, for which rates are applicable under Telephone Company local general services tariffs, e.g., 976 Network Services, and, (3) calls from a FGA line to another customer's service in accordance with that customer's applicable service rates when the Telephone Company performs the billing function for that customer. Calls to community information services are permitted only where billing capability exists, i.e., sufficient billing and call detail is available to permit the billing of applicable non-access charges. For calls to Directory Assistance (411 and 555-1212 whichever is available), Switched Access Service usage rates will not apply. Instead, calls to this service are subject to the Directory Assistance Service per call rates as set forth in 9.6(B) following.

(10) When a FGA switching arrangement for an individual customer (a single line or entire hunt group) is discontinued at an end office, an intercept announcement is provided. This arrangement provides, for a limited period of time, an announcement that the service associated with the number dialed has been disconnected.

6. Switched Access Service (Cont'd)

6.2 Provision and Description of Switched Access Service Arrangements (Cont'd)

6.2.1 Feature Group A (FGA) (Cont'd)

(B) Optional Features

(1) Common Switching Optional Features

(a) Hunt Group Arrangement
(b) Uniform Call Distribution Arrangement
(c) Nonhunting Number for Use with Hunt Group Arrangement or Uniform Call Distribution Arrangement
(d) Call Denial
(e) Service Code Denial
(f) Toll Billing Exception
(g) WATS Access Line Service with the following options:
- Hunt Group Arrangement
- Uniform Call Distribution Arrangement
- Nonhunting Number for use with Hunt Group or Uniform Call Distribution Arrangements
- Code Screening
- Overflow Advance Arrangement

(2) Transport Termination Optional Features

(a) Two-way operation with dial pulse address signaling and loop start supervisory signaling
(b) Two-way operation with dial pulse address signaling and ground start supervisory signaling
(c) Two-way operation with dual tone multifrequency address signaling and loop
(d) Two-way operation with dual tone multifrequency address signaling and ground start supervisory signaling
(e) Terminating operation with dial pulse address signaling and loop start supervisory signaling
(f) Terminating operation with dial pulse address signaling and ground start supervisory signaling
(g) Terminating operation with dual tone multifrequency address signaling and loop start supervisory signaling
(h) Terminating operation with dual tone multifrequency address signaling and ground start supervisory signaling
(i) Originating operation with loop start supervisory signaling
(j) Originating operation with ground start supervisory signaling.

6. Switched Access Service (Cont'd)

6.2 Provision and Description of Switched Access Service Arrangements (Cont'd)

6.2.1 Feature Group A (FGA) (Cont'd)

(B) Optional Features (Cont'd)

(3) Switched Transport Optional Features

(a) Supervisory Signaling (as set forth in 6.1.2(A)(7)(a) preceding)
(b) Customer Specified Entry Switch Receive Level

(4) Certain other features which may be available in connection with Feature Group A are provided under the Telephone Company's local general services tariffs: These are:

(a) Call Forwarding
(b) Call Waiting
(c) Speed Calling
(d) Remote Call Forwarding
(e) IntraLATA extensions
(f) Directory listings

(C) Transmission Specifications

FGA is provided with either Type B or Type C Transmission Specifications. The specifications for the associated parameters are guaranteed to the first point of switching. Type C Transmission Specifications are provided with Interface Group 1 and Type B is provided with Interface Groups 2 through 10. Type DB Data Transmission Parameters are provided with FGA to the first point of switching.

(D) Testing Capabilities

FGA is provided, in the terminating direction where equipment is available, with seven digit access to balance (100 type) test line and milliwatt (102 type) test line. In addition to the tests described in 6.1.5 preceding which are included with the installation of service, additional Cooperative Acceptance Testing and Nonscheduled Testing are available for FGA as set forth in 13.3.4. following.

6. Switched Access Service (Cont'd)

6.2 Provision and Description of Switched Access Service Arrangements (Cont'd)

6.2.2 Feature Group B (FGB)

(A) Description

(1) FGB, when directly routed to an end office (i.e., provided without the use of an access tandem switch), is provided at appropriately equipped Telephone Company electronic end office switches. When provided via Telephone Company designated electronic access tandem switches, FGB switching is provided at Telephone Company electronic and electromechanical end office switches.

(2) FGB is provided as trunk side switching through the use of end office or access tandem switch trunk equipment. The switch trunk equipment is provided with wink start start-pulsing signals and answer and disconnect supervisory signaling.

(3) FGB switching is provided with multifrequency address signaling in both the originating and terminating directions. Except for FGB switching provided with the automatic number identification (ANI) or rotary dial station signaling arrangements as set forth in 6.4 following, any other address signaling in the originating direction, if required by the customer, must be provided by the customer's end user using inband tone signaling techniques. Such inband tone address signals will not be regenerated by the Telephone Company and will be subject to the ordinary transmission capabilities of the Switched Transport provided.

(4) The access code for FGB switching is a uniform access code. The form of the uniform access code is 950-XXXX for carriers. These uniform access codes will be the assigned access numbers of all FGB switched access service provided to the customer by the Telephone Company.

6. Switched Access Service (Cont'd)

6.2 Provision and Description of Switched Access Service Arrangements (Cont'd)

6.2.2 Feature Group B (FGB) (Cont'd)

(A) Description (Cont'd)

(5) FGB switching, when used in the terminating direction, may be used to access valid NXXs in the LATA, time or weather announcement services of the Telephone Company, community information services of an information service provider and other customers' services (by dialing the appropriate digits). When directly routed to an end office, only those valid NXX codes served by that end office may be accessed. When routed through an access tandem, only those valid NXX codes served by end offices subtending the access tandem may be accessed. The customer will also be billed additional non-access charges for calls to certain community information services for which rates are applicable under Telephone Company local general services tariffs, e.g., 976 Network Service. Calls to community information services are permitted only where billing capability exists, i.e., sufficient billing and call detail is available to permit the billing of applicable non-access charges. Additionally, non-access charges will also be billed for calls from a FGB trunk to another customer's service in accordance with that customer's applicable service rates when the Telephone Company performs the billing function for that customer. Calls in the terminating direction will not be completed to 950-XXXX access codes, local operator assistance (0- and 0+), Directory Assistance (411 or 555-1212 whichever is available), service codes (800) 275-2355 and 911 or 101XXXX access codes. Calls will be completed to Directory Assistance (NPA-555-1212 or 411 or 555-1212, whichever is available) when FGB Switching is combined with Directory Assistance Switching. The combination of FGB Switched Access Service with DA Service is provided as set forth in 9. following. FGB may not be switched, in the terminating direction, to Switched Access Service Feature Groups B, C, D, Trunkside BSA - 950 Option, Trunkside BSA - MTS/WATS Option, and Trunkside BSA-101XXXX Option. When a provider of MTS and WATS subscribes to both FGB and FGD at an equal access end office or to both FGB and FGC at any end office, all such FGB, FGC, and FGD usage originating and terminating at those end office will be subject to the premium Carrier Common Line, Switched Transport, Local Switching - LS2, the Residual Interconnection Charge, and Information Surcharge rates set forth in 3.8 and 6.9.

6. Switched Access Service (Cont'd)

6.2 Provision and Description of Switched Access Service Arrangements (Cont'd)

6.2.2 Feature Group B (FGB) (Cont'd)

(A) Description (Cont'd)

(6) The Telephone Company will establish a trunk group or groups for the customer at end office switches or access tandem switches where FGB switching is provided. When required by technical limitations, a separate trunk group will be established for each type of FGB switching arrangement provided. Different types of FGB or other switching arrangements may be combined in a single trunk group at the option of the Telephone Company.

(7) When all FGB switching arrangements are discontinued at an end office and/or in a LATA, an intercept announcement is provided. This arrangement provides, for a limited period of time, an announcement that the service associated with the number dialed has been disconnected.

(B) Optional Features

(1) Common Switching Optional Features

(a) Automatic Number Identification (ANI)

(b) Up to 7 Digit Outpulsing of Access Digits to customer

(c) WATS Access Line Service with the following options:

- Hunt Group Arrangement
- Uniform Call Distribution Arrangement
- Non hunting number for use with Hunt Group or Uniform Call Distribution Arrangements
- Code Screening
- Overflow Advance Arrangement

(d) Alternate Traffic Routing

(2) Transport Termination Optional Features

(a) Rotary Dial Station Signaling

6. Switched Access Service (Cont'd)

6.2 Provision and Description of Switched Access Service Arrangements (Cont'd)

6.2.2 Feature Group B (FGB) (Cont'd)

(B) Optional Features (Cont'd)

(3) Switched Transport Optional Features Where Available

(a) Customer Specification of Switched Transport Termination

(b) Supervisory Signaling (as set forth in 6.1.2(A)(7)(a) preceding.)

(c) Customer specified Entry Switch Received Level.

(C) Transmission Specifications

FGB is provided with either Type B or Type C Transmission Specifications. The specifications for the associated parameters are guaranteed to the end office when routed directly or to the first point of switching when routed via an access tandem. Type C Transmission Specifications are provided with Interface Group 1 and Type B is provided with Interface Groups 2 through 10. Type DB Data Transmission Parameters are provided with FGB to the first point of switching.

(D) Testing Capabilities

FGB is provided, in the terminating direction where equipment is available, with seven digit access to balance (100 type) test line and milliwatt (102 type) test line, nonsynchronous or synchronous test line, automatic transmission measuring (105 type) test line, data transmission (107 type) test line, loop around test line, short circuit test line and open circuit test line. In addition to the tests described in 6.1.5 preceding which are included with the installation of service, additional Cooperative Acceptance Testing, Cooperative Scheduled Testing, Manual Scheduled Testing and Nonscheduled Testing are available for FGB as set forth in 13.3.4. following.

6. Switched Access Service (Cont'd)

6.2 Provision and Description of Switched Access Service Arrangements (Cont'd)

6.2.3 Feature Group C (FGC)

(A) Description

(1) FGC is provided at all Telephone Company end office switches on a direct trunk basis or via Telephone Company designated access tandem switches. FGC switching is provided to the customer (i.e., providers of MTS and WATS) at an end office switch unless Feature Group D end office switching is provided in the same office. When FGD switching is available, FGC switching will not be provided.

(2) FGC is provided as trunk side switching through the use of end office or access tandem switch trunk equipment. The switch trunk equipment is provided with answer and disconnect supervisory signaling. Wink start start-pulsing signals are provided in all offices where available. In those offices where wink start start-pulsing signals are not available, delay dial start-pulsing signals will be provided, unless immediate dial pulse signaling is provided, in which case no start-pulsing signals are provided.

(3) FGC switching is provided with multifrequency address signaling except in certain electromechanical end office switches where multifrequency signaling is not available. In such switches, the address signaling will be dial pulse, revertive pulse, immediate dial pulse or panel call indicator signaling, whichever is available. Up to 12 digits of the called party number dialed by the customer's end user using dual tone multifrequency or dial pulse address signals will be provided by Telephone Company equipment to the customer's premises where the Switched Access Service terminates. Such called party number signals will be subject to the ordinary transmission capabilities of the Local Transport provided.

(4) No access code is required for FGC switching. The telephone number dialed by the customer's end user shall be a seven or ten digit number for calls in the North American Numbering Plan (NANP). For international calls outside the NANP, a seven to twelve digit number may be dialed. The form of the numbers dialed by the customer's end user is NXX-XXXX, 0 or 1 + NXX-XXXX, NPA + NXX-XXXX, 0 or 1 + NPA + NXX-XXXX, and, when the end office is equipped for International Direct Distance Dialing (IDDD), 01 + CC + NN or 011 + CC + NN.

6. Switched Access Service (Cont'd)

6.2 Provision and Description of Switched Access Service Arrangements (Cont'd)

6.2.3 Feature Group C (FGC) (Cont'd)

(A) Description (Cont'd)

(5) FGC switching, when used in the terminating direction, may be used to access valid NXXs in the LATA, time or weather announcement services of the Telephone Company, community information services of an information provider, and other customers' services (by dialing the appropriate codes) when the services can be reached using valid NXX codes. When directly routed to an end office, only those valid NXX codes served by that office may be accessed. When routed through an access tandem, only those valid NXX codes served by offices subtending the access tandem may be accessed. Where measurement capabilities exist, the customer will also be billed additional non-access charges for calls to certain community information services, for which rates are applicable under Telephone Company local general services tariffs, e.g., 976 Network Services. Calls to community information services are permitted only where billing capability exists, i.e., sufficient billing and call detail is available to permit the billing of applicable non-access charges.

Additionally, non-access charges will also be billed for calls from a FGC trunk to another customer's service in accordance with that customer's billable service rates when the Telephone Company performs the billing function for that customer. Calls in the terminating direction will not be completed to 950-XXXX access codes, local operator assistance (0- and 0+), Directory Assistance (411 or 555-1212 whichever is available), service codes (800) 275-2355 and 911 and 101XXXX access codes. Calls will be completed to Directory Assistance (NPA-555-1212 or 411 or 555-1212, whichever is available) when FGC switching is combined with Directory Assistance switching. The combination of FGC Switched Access Service with DA Service is provided as set forth in 9. following. FGC may not be switched, in the terminating direction, to Switched Access Service Feature Groups B, C or D and to Trunkside BSA - 950 Option, Trunkside BSA - MTS/WATS Option and Trunkside BSA-101XXXX Option.

(6) The Telephone Company will establish a trunk group or groups for the customer at end office switches or access tandem switches where FGC switching is provided. When required by technical limitations, a separate trunk group will be established for each type of FGC switching arrangement provided. Different types of FGC or other switching arrangements may be combined in a single trunk group at the option of the Telephone Company.

6. Switched Access Service (Cont'd)

6.2 Provision and Description of Switched Access Service Arrangements (Cont'd)

6.2.3 Feature Group C (FGC) (Cont'd)

(B) Optional Features

(1) Common Switching Optional Features Where Available

(a) Automatic Number Identification (ANI)
(b) Service Class Routing
(c) Dial Pulse Address Signaling
(d) Revertive Pulse Address Signaling
(e) Immediate Dial Pulse Address Signaling
(f) Alternate Traffic Routing
(g) Panel Call Indicator Address Signaling
(h) Code Screening for Use with WATS Access Line Service
(i) Hunt Group Arrangement for Use with WATS Access Line Service
(j) Uniform Call Distribution Arrangement for Use with WATS Access Line Service
(k) Nonhunting Number for Use with Hunt Group Arrangement or Uniform Call Distribution Arrangement for Use with WATS Access Lines.
(l) Overflow Advance Arrangement for Use with WATS Access Line Service
(m) Delay Dial Start-Pulsing Signaling
(n) 900 Access Service

(2) Transport Termination Optional Features

(a) Operator Trunks - i.e., Coin, Non-Coin and Combined Coin and Non-Coin. (Non-Coin Trunks are provided at Telephone Company electronic and electromechanical end offices. Coin and Combined Coin and Non-Coin are provided only at Telephone Company electronic end offices and other Telephone Company end offices where equipment is available.)

(3) Switched Transport Optional Features

(a) Supervisory Signaling (as set forth in 6.1.2(A)(7)(a) preceding)

(4) Line Termination Optional Features

(a) Dialed Number Identification Service
(b) Answer Supervision

6. Switched Access Service (Cont'd)

6.2 Provision and Description of Switched Access Service Arrangements (Cont'd)

6.2.3 Feature Group C (FGC) (Cont'd)

(C) Transmission Specifications

FGC is provided with either Type B or Type C Transmission Specifications as follows:

- When routed directly to the end office either Type B or Type C is provided.

- When routed to an access tandem only Type B is provided.

- Type B or Type C is provided on the transmission path from the access tandem to the end office.

Type C Transmission Specifications are provided with Interface Group 1 when routed directly to an end office. Type B is provided with Interface Groups 2 through 10, whether routed directly to an end office or to an access tandem.

Type DB Data Transmission Parameters are provided with FGC for the transmission path between the customer's premises and the end office when directly routed to the end office, and Type DB Data Transmission Parameters are provided for the transmission between the customer's premises and the access tandem and between the access tandem and the end office when routed via an access tandem.

(D) Testing Capabilities

FGC is provided, in the terminating direction where equipment is available, with seven digit access to balance (100 type) test line, milliwatt (102 type) test line, nonsynchronous or synchronous test line, automatic transmission measuring (105 type) test line, data transmission (107 type) test line, loop around test line, short circuit test line and open circuit test line. In addition to the tests described in 6.1.5 preceding which are included with the installation of service, additional Cooperative Acceptance Testing, Cooperative Scheduled Testing or Manual Scheduled Testing, and Nonscheduled Testing are available as set forth in 13.3.4 following for FGC.

6. Switched Access Service (Cont'd)

6.2 Provision and Description of Switched Access Service Arrangements (Cont'd)

6.2.4 Feature Group D (FGD)

(A) Description

(1) FGD is provided at Telephone Company designated electronic end office switches whether routed directly or via Telephone Company designated electronic access tandem switches. Feature Group D with out of band signaling is provided where conditions permit through Telephone Company designated switches.

(2) FGD is provided as trunk side switching through the use of end office or access tandem switch trunk equipment. The switch trunk equipment may be provided with wink start start-pulsing signals and answer and disconnect supervisory signaling, or without signaling when out of band signaling is specified.

(3) FGD switching is provided with multifrequency address or out of band signaling. When FGD switching is used with the 950 dialing option, FGD is only available from SS7 equipped offices. Up to 12 digits of the called party number dialed by the customer's end user using dual tone multifrequency or dial pulse address signals will be provided by Telephone Company equipment to the customer's premises where the Switched Access Service terminates. Such address signals will be subject to the ordinary transmission capabilities of the Switched Transport provided.

(4) FGD switching, when used in the terminating direction, may be used to access valid NXXs in the LATA, time or weather announcement services of the Telephone Company, community information services of an information service provider, and other customers' services (by dialing the appropriate codes) when such services can be reached using valid NXX codes. When directly routed to an end office, only those valid NXX codes served by that office may be accessed. When routed through an access tandem, only those valid NXX codes served by end offices subtending the access tandem may be accessed. The customer will also be billed additional non-access charges for calls to certain community information services, for which rates are applicable under Telephone Company local general service tariffs, e.g., 976 Network Service. Calls to community information services are permitted only where billing capability exists, i.e., sufficient billing and call detail is available to permit the billing of applicable non-access charges.

6. Switched Access Service (Cont'd)

6.2 Provision and Description of Switched Access Service Arrangements (Cont'd)

6.2.4 Feature Group D (FGD) (Cont'd)

(A) Description (Cont'd)

(4) (Cont'd)

Additionally, non-access charges will also be billed for calls from a FGD trunk to another customer's service in accordance with that customer's applicable service rates when the Telephone Company performs the billing function for that customer. Calls in the terminating direction will not be completed to 950-XXXX access codes, local operator assistance (0- and 0+), Directory Assistance (411 or 555-1212 whichever is available), service codes (800) 275-2355 and 911, 101XXXX access codes or to a TRS Center. Calls will be completed to Directory Assistance (NPA-555-1212 or 411 or 555-1212, whichever is available) when FGD switching is combined with Directory Assistance switching. The combination of FGD Switched Access Service with DA Service is provided as set forth in 9. following. FGD may not be switched, in the terminating direction, to Switched Access Service Feature Groups B, C, D, Trunkside BSA - 950 Option, Trunkside BSA - MTS/WATS Option or Trunkside BSA-101XXXX Option.

(5) The Telephone Company will establish a trunk group or groups for the customer at end office switches or access tandem switches where FGD switching is provided. When required by technical limitations, or in the case of Switched 56 Kilobit Service and Operator Transfer Service, a separate trunk group will be established for each type of FGD switching arrangement provided. Different types of FGD or other switching arrangements may be combined in a single trunk group at the option of the Telephone Company.

(6) The access code for FGD switching is a uniform access code of the form 101XXXX. A single access code will be the assigned number of all FGD access provided to the customer by the Telephone Company. No access code is required for calls to a customer over FGD Switched Access Service if the end user's telephone exchange service is arranged for presubscription to that customer, as set forth in 4. preceding. As an option, where technically feasible, 950 on FGD may be accessed by dialing an associated uniform 950-XXXX access code. When used with the 950 dialing option, FGD is only available with SS7 signaling equipped offices.

6. Switched Access Service (Cont'd)

6.2 Provision and Description of Switched Access Service Arrangements (Cont'd)

6.2.4 Feature Group D (FGD) (Cont'd)

(A) Description (Cont'd)

(6) (Cont'd)

Where no access code is required, the number dialed by the customer's end user shall be a seven or ten digit number for calls in the North American Numbering Plan (NANP), except for 00- dialed calls which are routed to the predesignated customer. For international calls outside the NANP, a seven to twelve digit number may be dialed. The form of the numbers dialed by the customer's end user is NXX-XXXX, 0 or 1 + NXX-XXXX, NPA + NXX-XXXX, 0 or 1 + NPA + NXX-XXXX, and, when the end office is equipped for International Direct Distance Dialing (IDDD), 01 + CC + NN or 011 + CC + NN.

When the 101XXXX access code is used, FGD switching also provides for dialing the digit 0 for access to the customer's operator, 911 for access to the Telephone Company's emergency reporting service, or the end-of-dialing digit (#) for cut-through access to the customer's premises.

When the 101XXXX 1+ or 011+ sent-paid access code is dialed from a Telephone Company pay telephone to a customer that has not ordered per 6.4.2(C) or (D) following, the calls will be routed to a Telephone Company recording.

Rates and charges applicable to 950 on FGD service are as specified in Section 6.9.2 following.

In addition, customers who order 950 on FGD service from the effective date of this tariff until January 31, 1998 will only pay fifty percent of the appropriate nonrecurring charge.

6. Switched Access Service (Cont'd)

6.2 Provision and Description of Switched Access Service Arrangements (Cont'd)

6.2.4 Feature Group D (FGD) (Cont'd)

(A) Description (Cont'd)

(7) At the option of the customer, Switched 56 Kilobit Service as specified following is available for use with Trunkside BSA-101XXXX Option and Feature Group D. Switched 56 Kilobits traffic is ordered as set forth in 5.2 preceding and is delivered to the customer via separate Trunkside BSA-101XXXX Option or FGD trunks capable of or FGD trunks capable of supporting 56 Kbps digital transmission.
Switched 56 Kilobit service is an arrangement whereby customers may receive, or send, data at a speed of 56 Kbps from designated switches over dedicated trunks. The number dialed by the customer's end user shall be a seven or ten digit number in the form of NXX-XXXX, 1+NXX-XXXX, 101XXXX+NXX-XXXX, NPA+NXX-XXXX, 1+NPA+NXX-XXXX, or 101XXXX+NPA+NXX-XXXX and when the end office is equipped for International Direct Distance Dialing (IDDD), 011+CC+NN.

All rates and charges normally applicable to Trunkside BSA-101XXXX Option and Feature Group D, i.e., non-recurring, monthly recurring, and usage sensitive apply to Switched 56 Kilobit Service. Additionally, a per Switched 56 Kilobit access minute of use charge specified in 6.1.2(B)(6) preceding and 6.9.7 following, apply to Switched 56 Kilobit Service.

This option is not available in combination with out of band signaling.

(8) At the option of the customer, Operator Transfer Service as specified following is available for use with Feature Group D. Operator Transfer Service is ordered as set forth in 5.2 preceding and is provided to the customer via separate FGD trunks dedicated to Operator Transfer Service traffic.

Operator Transfer Service is an arrangement in which Telephone Company operators transfer 0 minus end user dialed calls, i.e., the end user dials 0 with no additional digits, to the customer designated by the end user.

The operator transfer function will be performed in the following manner:

6. Switched Access Service (Cont'd)

6.2 Provision and Description of Switched Access Service Arrangements (Cont'd)

6.2.4 Feature Group D (FGD) (Cont'd)

(A) Description (Cont'd)

(8) (Cont'd)

- The operator answers the end user 0 minus dialed call.

- Initially, the Operator will direct the end user to dial the interexchange carrier on a direct basis. If the end user insists that the Operator complete the call, the operator will ask the end user to identify the Operator Services Provider or customer to which they desire to be connected. The operator will then transfer the call to the designated service provider.

- If the end user has no preference, or the identified service provider has not subscribed to Operator Transfer Service, the end user will be asked to select from a list of available service providers.

The list of available Operator Transfer Service customers will be updated monthly. The order in which customers will be read to end users will be initially determined by lottery. For each subsequent monthly update, following the initial order selection, the customer in the first position on the list will be moved to the last position on the list. All other customers on the list will be moved up one position, e.g., 3rd to 2nd, 2nd to 1st, etc. New Operator Transfer Service customers will be placed at the bottom of the list of customers pending the next monthly update.

0 minus Public Coin calls will be transferred to the end user designated customer. When the call is coin sent-paid, the customer, in order to accept such calls, will be required to order signaling as specified in TR-TSY-000506 and TR-NPL-00258. The customer may receive inband, multi-wink, or expanded inband coin control signaling, where available, from end offices served by an Operator Services Access Point. Different signalling types cannot be mixed on a single trunk group.

All rates and charges normally applicable to Feature Group D, i.e., non-recurring, monthly recurring, and usage sensitive, apply to Operator Transfer Service. Additionally, a charge as specified in Section 6.9.8 following is assessed the customer per 0 minus call transferred.

6. Switched Access Service (Cont'd)

6.2 Provision and Description of Switched Access Service Arrangements (Cont'd)

6.2.4 Feature Group D (FGD) (Cont'd)

(B) Optional Features

(1) Common Switching Optional Features

(a) Automatic Number Identification (ANI)
(b) Service Class Routing
(c) Alternate Traffic Routing
(d) International Carrier Option
(e) Code Screening for Use with WATS Access Line Service
(f) Hunt Group Arrangement for Use with WATS Access Line Service
(g) Uniform Call Distribution Arrangement for Use with WATS Access Line Service
(h) Nonhunting Number for Use with Hunt Group Arrangement or Uniform Call Distribution Arrangement for Use with WATS Access Lines
(i) Overflow Advance Arrangement for Use with WATS Access Line Service
(j) Calling Party Number * +
(k) Charge Number *
(l) Carrier Selection Parameter * ++
(m) Access Transport Parameter * ++
(n) Flexible Automatic Number Identification(Flex ANI)
(o) 900 Access Service
(p) Carrier Identification Parameters (CIP) * ++
(q) 950-XXXX Dialing On FGD*

\+ CPN is not offered where it is not technically feasible.
++ Available only at selected Telephone Company switches.
* Available only on originating FGD.

6. Switched Access Service (Cont'd)

6.2 Provision and Description of Switched Access Service Arrangements (Cont'd)

6.2.4 Feature Group D (FGD) (Cont'd)

(B) Optional Features (Cont'd)

(2) Transport Termination Optional Features

(a) Operator Trunk, Full Feature Arrangement

(3) Switched Transport Optional Features

(a) Supervisory signaling (as set forth in 6.1.2(A)(7)(a) preceding).
(b) Customer Specified Entry Switch Receive Level (as set forth in 6.1.2(A)(7)(b) preceding).
(c) Customer Specification of Switched Transport Termination (as set forth in 6.1.2(A)(7)(c) preceding).
(d) Tandem to End Office Re-Route Option (as set forth in 6.1.2(A)(7)(d) preceding).
(e) Out of band signaling (as set forth in 6.1.2(A)(7)(e) preceding).

(4) Line Termination Optional Features

(a) Dialed Number Identification Service
(b) Answer Supervision

6. Switched Access Service (Cont'd)

6.2 Provision and Description of Switched Access Service Arrangements (Cont'd)

6.2.4 Feature Group D (FGD) (Cont'd)

(C) Transmission Specifications

FGD is provided with either Type A, Type B or Type C Transmission Specifications as follows:

- When routed directly to the end office either Type B or C is provided.

- When routed to an access tandem only Type A is provided.

- Type A is provided on the transmission path from the access tandem to the end office.

Type C Transmission Specifications are provided with Interface Group 1. Type A and Type B Transmission Specifications are provided with Interface Groups 2 through 10.

900 Access Service traffic originating from equal access end offices with six digit translation capability, and for 500 Access Service and Toll Free Data Base Access Service traffic originating from end offices with Data Base query functionality, all normal Feature Group D parameters apply.

500 Access Service, Toll Free Data Base Access Service, and 900 Access Service, traffic originating from all other end offices, Type A Transmission Specifications are provided for the facility between the access tandem and the customer's premises.

Feature Group D trunks equipped for Switched 56 Kilobit Service traffic are subject to the following transmission specification:

- Transmission rate is 56 Kbps full duplex

Feature Group D trunks equipped for Operator Transfer Service are subject to Feature Group D transmission specifications unless otherwise specified.

6. Switched Access Service (Cont'd)

6.2 Provision and Description of Switched Access Service Arrangements (Cont'd)

6.2.5 Switched Transport Facilities

Customers requesting Lineside or Trunkside Switched Access service must specify the type of Collocated Interconnection Cross-Connect Service and SPOT Bay Frame and Terminations pursuant to Section 19 following, Entrance Facility, or DS3, DS1, or Voice Grade between the customer's facilities or Collocated Interconnected arrangement and the SWC.

The customer must also specify if Direct Trunked Transport or Tandem Switched Transport is desired. Tandem Switched Transport is not available for Lineside Switched Access Service. If Direct Trunked Transport is requested, the customer must specify the type of Direct Trunked Transport facility, DSR, DSSAN, DSSSP, DS3, DS1, or Voice Grade to be utilized. If Tandem Switched Transport is requested, the Telephone Company shall determine the type of facilities to be utilized from the SWC of the customer's facilities to the end office, via the access tandem, based on the customer's order for service on a busy hour minutes of capacity or on a per trunk basis.

There are several types of facilities, DSR, DSSAN, DSSSP, DS3, DS1, or Voice Grade, available to the customer for Entrance Facilities and Direct Trunked Transport facilities for Lineside or Trunkside Switched Access service. Following is a brief description of each type of facility. Each type, as well as Collocated Interconnection Cross-Connect Service and SPOT Bay Frame and Terminations as specified in Section 19 following, has its own characteristics and is available with multiplexing options as set forth in 6.1.2(A)(8)(b) preceding.

(A) Voice Grade Facility

A Voice Grade facility is an electrical communications path, which provides voice-frequency transmission in the nominal frequency range of 300 to 3000 Hz and may be terminated two-wire or four-wire. Compatible Interface Groups are described in 6.1.2(A)(6) preceding.

(B) DS1 Facility

DS1 facilities are available for Entrance Facilities and for Direct Trunked Transport facilities. A DS1 facility is capable of transmitting electrical signals at a nominal 1.544 Mbps, with the capability to channelize up to 24 voice-frequency transmission paths. Compatible Interface Groups are described in 6.1.2(A)(6) preceding.

6. Switched Access Service (Cont'd)

6.2 Provision and Description of Switched Access Service Arrangements (Cont'd)

6.2.5 Switched Transport Facilities (Cont'd)

(C) DS3 Facility

DS3 facilities are available for Entrance Facilities and Direct Trunked Transport facilities. A DS3 facility is capable of transmitting electrical signals at a nominal 44.736 Mbps, with the capability to channelize up to 672 voice-frequency transmission paths. Compatible Interface Groups are described in 6.1.2(A)(6) preceding.

(D) (Reserved for Future Use)

(E) Dedicated SONET Ring (DSR)

DSR facilities are available for Entrance Facilities and/or Direct Trunked Transport facilities. A DSR facility is capable of transmitting signals in ring capacities of OC3, OC12, and OC48. In addition, an OC12/3 node is available on OC12 DSRs.

(F) Dedicated SONET Shared Assurance Network (DSSAN)

DSSAN facilities are available for Entrance Facilities and for Direct Trunked Transport facilities. The DSSAN transport channel is capable of transmitting electrical signals at a nominal 1.544 Mbps, with the capability to channelize up to 24 voice-frequency transmission paths. Compatible Interface Groups are described in 6.1.2(A)(6) preceding.

(G) Dedicated SONET Shared Single Path (DSSSP)

DSSSP facilities are available for Entrance Facilities and Direct Trunked Transport facilities. A DSSSP facility is capable of transmitting electrical payload signals at a nominal 44.736 Mbps, with the capability to channelize up to 672 voice-frequency transmission paths. Compatible Interface Groups are described in 6.1.2(A)(6) preceding.

6. Switched Access Service (Cont'd)

6.2 Provision and Description of Switched Access Service Arrangements (Cont'd)

6.2.5 Switched Transport Facilities (Cont'd)

Beginning August 7, 1998, the Telephone Company will no longer offer DS3C with an optical interface in response to new requests. All new requests for DS3 optical interfaces will be provisioned over SONET transmission devices. The new optical option is DS3 SONET Optical Interface (SOI). Those DS3 services provisioned prior to August 7, 1998, with Telephone Company provided Optical Line Terminating Equipment (OLTE) located in the Serving Wire Center, will continue to be provided and maintained. A more detailed description of DS3 SONET Optical Interface is included in Section 7.2.9(A) following.

When the customer has ordered Trunkside BSA-101XXXX Option or Feature Group D with out of band signaling as set forth in 6.1.2(A)(7)(e) preceding, the Telephone Company will provide out of band signaling in accordance with the technical specifications set forth in Technical Reference GR-905-CORE, Issue 11, and as specified in sections 6.1.2 and 6.4.1.

6. Switched Access Service (Cont'd)

6.3 Provision and Description of Switched Access BSAs

Switched Access Service is also provided in the form of three unbundled Basic Serving Arrangements (BSAs) - Lineside, Trunkside and Dedicated Network Access Link (DNAL) connections. The provision of Lineside and Trunkside BSAs requires Switched Transport facilities and the appropriate Local Switching functions. The provision of DNAL BSAs requires Channel Mileage facilities and the appropriate Channel Termination functions. In addition, WATS Access Line Service as described in section 7.2.3(E) following may, at the option of the customer, be provided for use with the Lineside BSA and Trunkside BSAs.

There are also various Switched Transport and Local Switching optional features and Basic Service Elements (BSEs) available with a BSA. Unless specifically stated otherwise, these BSEs and features are available at most Telephone Company end office switches. WATS Access Line Service termination optional features and BSEs are available only in the end office designated as WATS serving offices.

There are three specific transmission specifications (i.e., Types A, B, and C) that have been identified for the provision of BSAs. The specifications provided are dependent on the interface group and the routing of the service (i.e., whether the service is routed directly to the end office or via an access tandem). The parameters for the transmission specifications are set forth in section 6.6 following.

Lineside and Trunkside BSAs are arranged for either originating, terminating or two-way calling, based on the customer end office switching capability ordered. Originating calling permits the delivery of calls from Telephone Exchange Service locations to the customer's facilities. Terminating calling permits the delivery of calls from the customer's facilities to Telephone Exchange Service locations. Two-way calling permits the delivery of calls in both directions, but not simultaneously. The Telephone Company will determine the type of calling to be provided unless the customer requests that a different type of directional calling is to be provided. In such cases, the Telephone Company will work cooperatively with the customer to determine the directionality.

For Telephone Company provided facilities between an access tandem and a TRS Center, calls will be delivered only in the originating direction. For calls originating from a TRS Center routed through an access tandem, access minutes of use will be reported by the TRS provider until the Telephone Company attains the appropriate measurement capabilities.

Following are detailed descriptions of each of the available BSAs. Each BSA is described in terms of its specific physical characteristics and calling patterns, the transmission specifications with which it is provided, the optional features and BSEs available for use with it, and the standard testing capabilities.

6. Switched Access Service (Cont'd)

6.3 Provision and Description of Switched Access BSAs (Cont'd)

6.3.1 Lineside BSA

(A) General Description

(1) Lineside BSA is provided in connection with the Telephone Company electronic and electromechanical end offices. At the option of the customer, Lineside BSA is provided on a single or multiple line group basis and is arranged for originating calling only, terminating calling only, or two-way calling. Lineside BSA provides lineside access to Telephone Company end office switches with an associated seven-digit local telephone number for the customer's use in originating communications (1) to an Interexchange Carrier's interstate service, or (2) to the Telephone Company's facilities when used to provide dial tone service from the Telephone Company's end office switch in a state other than the state of the customer's normal serving end office.

Entrance facilities are required between the serving wire center and an interexchange carrier's point of presence, or to a Telephone Company provided interstate transport capability, and the customer shall provide the connecting facility assignment (CFA) information, as defined in Section 2.6 preceding, using the industry standard Common Language Facility Identification. The CFA must include channel assignment information necessary to connect the Lineside BSA to the interstate network.

For existing Lineside BSA that is installed prior to February 24, 1997, connecting facility assignment information is not required. This information must be provided if any changes or rearrangements are requested for the existing services.

(2) Lineside BSA provides for a lineside termination at the first point of switching, which shall be selected by the Telephone Company within the requested LATA, unless the customer requests a different location at which Telephone Company facilities and measurement capabilities are available to accommodate such a request.

6. Switched Access Service (Cont'd)

6.3 Provision and Description of Switched Access BSAs (Cont'd)

6.3.1 Lineside BSA (Cont'd)

(A) General Description (Cont'd)

(3) The Telephone Company assigns a seven digit telephone number associated with the selected end office to provide access to Lineside BSA in the originating direction. The assigned number will be in the form NXX-XXXX. If the customer requests a specific number that is currently unassigned, the requested number will be assigned to the customer if the Telephone Company can comply with that request with reasonable effort.

(4) Calls from end users to the seven digit telephone numbers associated with Lineside BSA may be subject to Telephone Company Local and/or General Exchange Service tariff charges (including message unit and toll charges, as applicable). The monthly bills rendered to customers for their Lineside BSA service for which section 3, Carrier Common Line Access Service charges apply will include a credit to reflect message unit charges collected from their end users under the Telephone Company's Local and/or General Exchange Service tariffs. The credit will apply for recorded or assumed originating usage, as appropriate, for the Lineside BSA service provided. When the credit is applied on assumed usage, such credit will not exceed the assumed levels of usage set forth in section 6.8.8. No credit will apply for any terminating Lineside BSA access minutes. The message unit credit for originating Lineside BSA access minutes is set forth in section 6.8.11.

(5) At the option of the customer, Lineside BSA will be provided:

(a) with either ground start or loop start supervisory signaling and

(b) on a single or multiple line group basis.

(6) When Lineside BSA is used in the originating direction, no address signaling is provided by the Telephone Company. If such signaling is required, it must be provided by the customer's end user using inband tone signaling techniques. Inband tone address signals will not be regenerated by the Telephone Company and will be subject to the ordinary transmission capabilities of the Local Transport provided.

6. Switched Access Service (Cont'd)

6.3 Provision and Description of Switched Access BSAs (Cont'd)

6.3.1 Lineside BSA (Cont'd)

(A) General Description (Cont'd)

(7) When used in the terminating direction, Lineside BSA is arranged with dial tone start-dial signaling. At the option of the customer, terminating Lineside BSA may be arranged for dial pulse or dual tone multifrequency address signaling, subject to the availability of equipment at the first point of switching. When Lineside BSA is provided with a hunt group or uniform call distribution arrangement BSE, all Lineside BSAs will be arranged for the same type of address signaling.

Lineside BSA switching, when used in the terminating direction, may be used to access valid NXXs in the LATA, local operator service (0- and 0+), Directory Assistance (411 where available and 555-1212), emergency reporting service (911 where available), time or weather announcement services of the Telephone Company, community information services of an information service provider, and other customer's services (by dialing the appropriate digits). Charges for Lineside BSA terminating calls requiring operator assistance or calls to (800) 275-2355 or 911 will only apply where sufficient call details are available.

(8) Additional non-access charges will also be billed on a separate account for (1) an operator surcharge, as set forth in the local exchange tariffs, for local operator assistance (0- and 0+) calls, (2) calls to certain community information services, for which rates are applicable under Telephone Company exchange service tariffs, e.g., 976 Network Services, and, (3) calls from a Lineside BSA line to another customer's service in accordance with that customer's applicable service rates when the Telephone Company performs the billing function for that customer. For Lineside BSA calls to Directory Assistance (411 where available and 555-1212), Switched Access Service usage rates will not apply. Instead, Lineside BSA calls to this service are subject to the Directory Assistance and Directory Assistance Service per call rates as set forth in section 9.6(B) following.

6. Switched Access Service (Cont'd)

6.3 Provision and Description of Switched Access BSAs (Cont'd)

6.3.1 Lineside BSA (Cont'd)

(A) General Description (Cont'd)

(9) When Lineside BSA for an individual customer (A single line or entire hunt group) is discontinued at an end office, an intercept announcement is provided. This arrangement provides, for a limited period of time, an announcement that the service associated with the number dialed has been discontinued.

(10) When a WAL service is provided in conjunction with a Lineside BSA, the customer will be provided with Routing of IntraLATA Calls to the Telephone Company for Use with WATS Access Line Service Option.

(B) Lineside BSA Optional Features and BSEs

(1) Common Switching

(a) Hunting Service Arrangements (BSE)
(b) Uniform Call Distribution Arrangement (BSE)
(c) Non-Hunt Directory Numbers (BSE)
(d) Call Denial (Optional Feature)
(e) Service Code Denial (Optional Feature)
(f) Toll Billing Exception (Optional Feature)
(g) WATS Access Line Service with the following options:
- Hunt Group Arrangement (Optional Feature)
- Uniform Call Distribution Arrangement (Optional Feature)
- Nonhunting Number for use with Hunt Group Arrangement or Uniform Call Distribution Arrangement (Optional Feature)
- Code Screening (Optional Feature)
- Overflow Advance Arrangement (Optional Feature)

(h) Answer Supervision with a Line Side Interface (BSE)
(i) Make Busy Arrangement (BSE)
(j) Three-Way Call Transfer (BSE)
(k) Messaging Services Interface (BSE)
(l) Three-Way Calling (BSE)
(m) Direct Inward Dialing (DID) Service (BSE)
(n) DID Trunk Queuing (BSE)

6. Switched Access Service (Cont'd)

6.3 Provision and Description of Switched Access BSAs (Cont'd)

6.3.1 Lineside BSA (Cont'd)

(B) Lineside BSA Optional Features and BSEs (Cont'd)

(2) Transport Termination

(a) Two-way operation with dial pulse address signaling and loop start supervisory signaling.
(b) Two-way operation with dial pulse address signaling and ground start supervisory signaling.
(c) Two-way operation with dual tone multifrequency address signaling and loop start supervisory signaling.
(d) Two-way operation with dual tone multifrequency address signaling and ground start supervisory signaling.
(e) Terminating operation with dial pulse address signaling and loop start supervisory signaling.
(f) Terminating operation with dial pulse address signaling and ground start supervisory signaling.
(g) Terminating operation with dual tone multifrequency address signaling and loop start supervisory signaling.
(h) Terminating operation with dual tone multifrequency address signaling and ground start supervisory signaling.
(i) Originating operation with loop start supervisory signaling.
(j) Originating operation with ground start supervisory signaling.

(3) Switched Transport

(a) Supervisory Signaling (as set forth in 6.1.2(A)(7)(a) preceding).
(b) Customer Specified Entry Switch Receive Level.

(4) Certain other features which may be available in connection with Lineside BSA are provided under the Telephone Company's General Subscriber Service Tariffs. These are:

(a) Call Forwarding
(b) Call Waiting
(c) Speed Calling
(d) Remote Call Forwarding
(e) IntraLATA extensions
(f) Directory listings

6. Switched Access Service (Cont'd)

6.3 Provision and Description of Switched Access BSAs (Cont'd)

6.3.1 Lineside BSA (Cont'd)

(C) Transmission Specifications

Lineside BSA is provided with either Type A or Type C Transmission Specifications. The specifications for the associated parameters are guaranteed to the first point of switching. Type C Transmission Specifications are provided with Interface Group 1 and Type B is provided with Interface Groups 2 through 9. Type DB Data Transmission Parameters are provided with Lineside BSA to the first point of switching.

(D) Testing Capabilities

Lineside BSA is provided, in the terminating direction where equipment is available, with seven digit access to balance (100 type) text and milliwatt (102 type) test line. In addition to the tests described in 6.1.5 preceding which are included with the installation of service, additional Cooperative Acceptance Testing and Nonscheduled Testing are available for Lineside BSA as set forth in section 13.3.5 following.

6.3.2 Trunkside BSA

Trunkside BSA is provided in switched access packages. These are differentiated by their technical characteristics, e.g., the manner in which an end user accesses them in originating calls. Three options are offered as Trunkside BSA - 950 Option, Trunkside BSA - MTS/WATS Option and Trunkside BSA-101XXXX Option. The Trunkside - 950 Option is provided as set forth in 6.4.2(A) following. The Trunkside BSA - MTS/WATS Option is provided as set forth in 6.4.2(B) following. The Trunkside BSA-101XXXX Option is set forth in 6.4.2(C) following.

Trunkside BSAs provide trunk side access to Telephone Company end office switches, either directly or through a Telephone Company designated Switched Access Service tandem switch. The Telephone Company will establish a trunk group (or groups) between the customer's premises and end office or access tandem switches, based on the technical limitations imposed by the type, directionality and quantity of traffic specified by the customer. Different Switched Access Service arrangements may be combined in a single group at the option of the Telephone Company.

6. Switched Access Service (Cont'd)

6.3 Provision and Description of Switched Access BSAs (Cont'd)

6.3.2 Trunkside BSA (Cont'd)

(A) Trunkside BSA - 950 Option

(1) General Description

Trunkside BSA - 950 Option, which is available to all customers, provides trunk side access to Telephone Company end office switches with an associated uniform 950-XXXX access code for non-Toll Free and non-900 Access Service for the customer's use in originating communications from and terminating communications to an Interexchange Carrier's interstate service, Telephone Company central office, or a customer provided interstate communications capability. The customer must specify the Interexchange Carrier to which the Trunkside BSA - 950 Option is connected or, in the alternative, specify the means by which the access communication is transported to another state.

Trunkside BSA - 950 Option may be directly routed only to appropriately equipped electronic end office switches. Trunkside BSA - 950 Option may be provided via Telephone Company designated electronic access tandem switches to other Telephone Company electronic and electro-mechanical end office switches.

Trunkside BSA - 950 Option switch trunk equipment is provided with (a) wink start start-pulsing signaling and (b) answer and disconnect supervisory signaling. Trunkside BSA - 950 Option is provided with multi-frequency address signaling. With exception of Trunkside BSA - 950 Option provided with the automatic number identification (ANI) or rotary dial station signaling Local Switching optional features, any other address signaling required by the customer in the originating direction must be provided by the customer's end user using inband tone signaling techniques.

Inband tone address signals will not be regenerated by the Telephone Company and will be subject to the ordinary transmission capabilities of the Switched Transport provided.

When all Trunkside BSA - 950 Option service is discontinued at an end office and/or in a LATA, an intercept announcement indicating that the service associated with the number dialed has been discontinued will be provided for a limited period of time.

6. Switched Access Service (Cont'd)

6.3 Provision and Description of Switched Access BSAs (Cont'd)

6.3.2 Trunkside BSA (Cont'd)

(A) Trunkside BSA - 950 Option (Cont'd)

(1) General Description (Cont'd)

Trunkside BSA - 950 Option switching, when used in the terminating direction, may be used to access valid NXXs in the LATA, time or weather announcement services of the Telephone Company, community information services of an information service provider, and other customers' services (by dialing the appropriate digits). When directly routed to an end office, only those valid NXX codes served by that end office may be accessed. When routed through an access tandem, only those valid NXX codes served by end offices subtending the access tandem may be accessed. The customer will also be billed additional non-access charges for calls to certain community information services for which rates are applicable under Telephone Company exchange service tariffs, e.g., 976 Network Service. Additionally, non-access charges will also be billed for calls from a Trunkside BSA - 950 Option trunk to another customer's service in accordance with that customer's applicable service rates when the Telephone Company performs the billing function for that customer. Calls in the terminating direction will not be completed to 950-XXXX access codes, local operator assistance (0- and 0+), Directory Assistance (411 and 555-1212), service codes (800) 275-2355 and 911, or 101XXXX access codes. Calls will be completed to Directory Assistance (NPA-555-1212 or 555-1212) when Trunkside BSA -950 Option switching is combined with Directory Assistance Switching. The combination of Trunkside BSA - 950 Option Switched Access Service with Directory Assistance Service is provided as set forth in section 9 following.

Trunkside BSA - 950 Option may not be switched, in the terminating direction, to Switched Access Service Lineside BSA, Trunkside BSAs, or Feature Groups. When a provider of MTS and WATS subscribes to both Trunkside BSA-950 Option and Trunkside BSA-101XXXX Option at an equal access end office or to both Trunkside BSA-950 Option and Trunkside BSA-MTS/WATS Option at any end office, all such Trunkside BSA-950 Option, Trunkside BSA-MTS/WATS Option and Trunkside BSA-101XXXX Option usage originating and terminating at those end offices will be subject to the premium Carrier Common Line, Switched Transport, Local Switching - LS2, and Information Subcharge rates set forth in 3.8 and 6.9.

6. Switched Access Service (Cont'd)

6.3 Provision and Description of Switched Access BSAs (Cont'd)

6.3.2 Trunkside BSA (Cont'd)

(A) Trunkside BSA - 950 Option (Cont'd)

(1) General Description (Cont'd)

When a WAL Service is provided in conjunction with a Trunkside BSA - 950 Option Switched Access Service, the customer will be provided with the Routing of Intrastate Calls to the Telephone Company for Use with WATS Access Line Services Option.

(2) Trunkside BSA - 950 Option Optional Features and BSEs

(a) Common Switching

(1) Automatic Number Identification (BSE)
(2) Up to 7 Digit Outpulsing of Access Digits to customer (Optional Feature)
(3) WATS Access Line Service with the following options:
- Hunt Group Arrangement (Optional Feature)
- Uniform Call Distribution Arrangement (Optional Feature)
- Non-hunting number for use with Hunt Group or Uniform Call Distribution Arrangements (Optional Feature)
- Code Screening (Optional Feature)
- Overflow Advance Arrangement (Optional Feature)
(4) Alternate Traffic Routing (BSE)

(b) Transport Termination

(a) Rotary Dial Station Signaling

(c) Switched Transport

(1) Customer Specification of Switched Transport Termination
(2) Supervisory Signaling (as set forth in 6.1.2(A)(7)(a) preceding)
(3) Customer Specified Entry Switch Receive Level

6. Switched Access Service (Cont'd)

6.3 Provision and Description of Switched Access BSAs (Cont'd)

6.3.2 Trunkside BSA (Cont'd)

(A) Trunkside BSA - 950 Option (Cont'd)

(3) Transmission Specifications

Trunkside BSA - 950 Option is provided with either Type B or Type C Transmission Specifications. The specifications for the associated parameters are guaranteed to the end office when routed directly or to the first point of switching when routed via an access tandem. Type C Transmission Specifications are provided with Interface Group 1 and Type B is provided with Interface Groups 2 through 10. Type DB Data Transmission Parameters are provided with Trunkside BSA - 950 Option to the first point of switching.

(4) Testing Capabilities

Trunkside BSA - 950 Option is provided, in the terminating direction where equipment is available, with seven digit access to balance (100 type) test line, milliwatt (102 type) test line, nonsynchronous or synchronous test line, automatic transmission measuring (105 type) test line, data transmission (107 type) test line, loop around test line, short circuit test line and open circuit test line. In addition to the tests described in 6.1.5 preceding which are included with the installation of service, additional Cooperative Acceptance Testing, Cooperative Scheduled Testing, Manual Scheduled Testing and Nonscheduled Testing are available as set forth in 13.3.4 following.

(B) Trunkside BSA - MTS/WATS Option

(1) General Description

Trunkside BSA - MTS/WATS Option is available only to a customer furnishing interstate MTS/WATS. It is available in all Telephone Company end offices which are not equipped to provide Switched Access Service arrangements. Existing Trunkside BSA - MTS/WATS Option service will be converted to Trunkside BSA-101XXXX Option service when it becomes available in an end office.

6. Switched Access Service (Cont'd)

6.3 Provision and Description of Switched Access BSAs (Cont'd)

6.3.2 Trunkside BSA (Cont'd)

(B) Trunkside BSA - MTS/WATS Option (Cont'd)

(1) General Description (Cont'd)

No access code is required for Trunkside BSA - MTS/WATS Option switching. The telephone number dialed by the customer's end user shall be a seven or ten digit number for calls in the North American Numbering Plan (NANP). For international calls outside the NANP, a seven to twelve digit number may be dialed. The form of the numbers dialed by the customer's end user is NXX-XXXX, 0 or 1+NXX-XXXX, NPA+NXX-XXXX, 0 or 1+NPA+NXX-XXXX. When the end office is equipped for International Direct Distance Dialing (IDDD) the form is 01+CC+NN or 01+CC+NN.

Trunkside BSA - MTS/WATS Option switch trunk equipment is provided with answer and disconnect supervisory signaling. Wink start start-pulse signaling is provided an all offices where available. In those offices where wink start start-pulse signaling is not available, delay dial start-pulse signaling will be provided, unless immediate dial pulse signaling is provided, in which case no start-pulsing signaling is provided.

Trunkside BSA - MTS/WATS Option is provided with multifrequency address signaling except in certain electromechanical end office switches where such signaling is not available. In these switches, the address signaling will be dial pulse, revertive pulse, immediate dial pulse or panel call indicator signaling, whichever is available. Up to 12 digits of the called party number dialed by the customer's end user using dual tone multifrequency or dial pulse address signaling will be provided by the Telephone Company equipment to the customer premises where the Switched Access Service terminates. Called party number signals will be subject to the ordinary transmission capabilities of the Local Transport provided.

6. Switched Access Service (Cont'd)

6.3 Provision and Description of Switched Access BSAs (Cont'd)

6.3.2 Trunkside BSA (Cont'd)

(B) Trunkside BSA - MTS/WATS Option (Cont'd)

(1) General Description (Cont'd)

Trunkside BSA - MTS/WATS Option switching, when used in the terminating direction, may be used to access valid NXXs in the LATA, time or weather announcement services of the Telephone Company, community information services of an information service provider, and other customers' services (by dialing the appropriate codes) when the services can be reached using valid NXX codes. When directly routed to an end office, only those valid NXX codes served by that end office may be accessed. When routed through an access tandem, only those valid NXX codes served by end offices subtending the access tandem may be accessed. Where measurement capabilities exist, the customer will also be billed additional non-access charges for calls to certain community information services, for which rates are applicable under Telephone Company exchange service tariffs, e.g., 976 Network Service. Additionally, non-access charges will also be billed for calls from a Trunkside BSA - MTS/WATS Option trunk to another customer's service in accordance with that customer's applicable service rates when the Telephone Company performs the billing function for that customer. Calls in the terminating direction will not be completed to 950-XXXX access codes, local operator assistance (0- and 0+), Directory Assistance (411 and 555-1212), service codes (800) 275-2355 and 911, or 101XXXX access codes. Calls will be completed to Directory Assistance (NPA-555-1212 or 555-1212) when Trunkside BSA - MTS/WATS Option switching is combined with Directory Assistance Switching. The combination of Trunkside BSA - MTS/WATS Option Switched Access Service with Directory Assistance Service is provided as set forth in section 9 following. Trunkside BSA - MTS/WATS Option may not be switched, in the terminating direction, to Switched Access Service.

6. Switched Access Service (Cont'd)

6.3 Provision and Description of Switched Access BSAs (Cont'd)

6.3.2 Trunkside BSA (Cont'd)

(B) Trunkside BSA - MTS/WATS Option (Cont'd)

(2) Trunkside BSA - MTS/WATS Option Optional Features and BSEs

(a) Common Switching

(1) Automatic Number Identification (BSE)
(2) Service Class Routing (Optional Feature)
(3) Dial Pulse Address Signaling (Optional Feature)
(4) Revertive Pulse Address Signaling (Optional Feature)
(5) Immediate Dial Pulse Address Signaling (Optional Feature)
(6) Alternate Traffic Routing (BSE)
(7) Panel Call Indicator Address Signaling (Optional Feature)
(8) Code Screening for use with WATS Access Line Service (Optional Feature)
(9) Hunt Group Arrangement for Use with WATS Access Line Service (Optional Feature)
(10) Uniform Call Distribution Arrangement for Use with WATS Access Line Service Optional Feature)
(11) Nonhunting Number for Use with Hunt Group Arrangement or Uniform Call Distribution Arrangement for Use with WATS Access Line Service (Optional Feature)
(12) Overflow Advance Arrangement for Use with WATS Access Line Service (Optional Feature)
(13) 900 Access Service

(b) Transport Termination

(1) Operator Trunks (i.e., coin, non-coin and combined coin and non-coin. Non-coin Trunks are provided at Telephone Company electronic and electromechanical end offices. Coin and combined coin and non-coin are provided only at Telephone Company electronic end offices and other Telephone Company end offices where equipment is available).

6. Switched Access Service (Cont'd)

6.3 Provision and Description of Switched Access BSAs (Cont'd)

6.3.2 Trunkside BSA (Cont'd)

(B) Trunkside BSA - MTS/WATS Option (Cont'd)

(2) Trunkside BSA - MTS/WATS Option Optional Features and BSEs (Cont'd)

(c) Switched Transport

(1) Supervisory Signaling (as set forth in section 6.1.2(A)(7)(a) preceding)

(d) WATS Access Line Termination

(1) E&M Supervisory Signaling

(3) Transmission Specifications

Trunkside BSA - MTS/WATS Option is provided with either Type B or Type C Transmission Specifications as follows:

- When routed directly to the end office either Type B or Type C is provided.
- When routed to an access tandem only Type B is provided.
- Type B or Type C is provided on the transmission path from the access tandem to the end office.

Type C Transmission Specifications are provided with Interface Group 1 when routed directly to an end office. Type B is provided with Interface Groups 2 through 10, whether routed directly to an end office or to an access tandem.

Type DB Data Transmission Parameters are provided with Trunkside BSA - MTS/WATS Option for the transmission path between the customer's premises and the end office when directly routed to the end office, and Type DB Data Transmission Parameters are provided for the transmission path between the customer's premises and the access tandem and between the access tandem and the end office when routed via an access tandem.

6. Switched Access Service (Cont'd)

6.3 Provision and Description of Switched Access BSAs (Cont'd)

6.3.2 Trunkside BSA (Cont'd)

(B) Trunkside BSA - MTS/WATS Option (Cont'd)

(4) Testing Capabilities

Trunkside BSA - MTS/WATS Option is provided, in the terminating direction where equipment is available, with seven digit access to balance (100 type) test line, milliwatt (102 type) test line, nonsynchronous or synchronous test line, automatic transmission measuring (105 type) test line, data transmission (107 type) test line, loop around test line, short circuit test line and open circuit test line. In addition to the tests described in 6.1.5 preceding which are included with the installation of service, additional Cooperative Acceptance Testing, Cooperative Scheduled Testing, Manual Scheduled Testing and Nonscheduled Testing are available as set forth in 13.3.4 following for Trunkside BSA - MTS/WATS Option.

(C) Trunkside BSA-101XXXX Option

(1) General Description

Trunkside BSA-101XXXX Option is available to all customers at Telephone Company designated electronic end office switches, whether routed directly or via Telephone Company designated electronic access tandem switches. Trunkside BSA-101XXXX Option provides trunk side access to end office switches with an associated uniform 101XXXX access code for use in originating and terminating communications.

All Trunkside BSA-101XXXX Options provided to the customer by the Telephone Company will use these uniform access codes.

No access code is required for calls to a customer over a Trunkside BSA-101XXXX Option if the Switched Access Service customer's end user has presubscribed its Telephone Exchange Service to that customer, as set forth in section 4.2 preceding.

6. Switched Access Service (Cont'd)

6.3 Provision and Description of Switched Access BSAs (Cont'd)

6.3.2 Trunkside BSA (Cont'd)

(C) Trunkside BSA-101XXXX Option (Cont'd)

(1) General Description (Cont'd)

When no access code is required, the telephone number dialed by the customer's end user shall be a seven or ten digit number for calls in the North American Numbering Plan (NANP). For international calls outside the NANP, a seven to twelve digit number may be dialed. The form of the numbers dialed by the customer's end user is NXX-XXXX, 0 or 1+NXX-XXXX, NPA+NXX-XXXX, 0 or 1+NPA+NXX-XXXX. When the end office is equipped for International Direct Distance Dialing (IDDD) the form is 01+CC+NN or 011+CC+NN.

Trunkside BSA-101XXXX Option switch trunk equipment is provided with

(a) wink start start-pulse signaling and
(b) answer and disconnect supervisory signaling
(c) or without signaling when out of band signaling is specified.

Trunkside BSA-101XXXX Option is provided with multifrequency address signaling or out of band signaling. Up to twelve digits of the called party number dialed by the customer's end user using dual tone multifrequency or dial pulse address signaling will be provided by the Telephone Company equipment to the customer's premises where the Switched Access Service terminates. Called party number signals will be subject to the ordinary transmission capabilities of the Switched Transport provided.

6. Switched Access Service (Cont'd)

6.3 Provision and Description of Switched Access BSAs (Cont'd)

6.3.2 Trunkside BSA (Cont'd)

(C) Trunkside BSA-101XXXX Option (Cont'd)

(1) General Description (Cont'd)

Trunkside BSA-101XXXX Option switching, when used in the terminating direction, may be used to access valid NXXs in the LATA, time or weather announcement services of the Telephone Company, community information services of an information service provider, and other customer Trunkside BSA-101XXXX Option services (by dialing the appropriate codes) when such services can be reached using valid NXX codes. When directly routed to an end office, only those valid NXX codes served by that end office may be accessed. When routed through an access tandem, only those valid NXX codes served by end offices subtending the access tandem may be accessed. The customer will also be billed additional non-access charges for calls to certain community information services for which rates are applicable under Telephone Company exchange service tariffs, e.g., 976 Network Service.

Additionally, non-access charges will also be billed for calls from a Trunkside BSA-101XXXX Option trunk to another customer's service in accordance with that customer's applicable service rates when the Telephone Company performs the billing function for that customer. Calls in the terminating direction will not be completed to 950-XXXX access codes, local operator assistance (0- and 0+), Directory Assistance (411 and 555-1212), service codes (800) 275-2355 and 911, 101XXXX access codes, or to a TRS Center. Calls will be completed to Directory Assistance (NPA-555-1212 or 555-1212) when Trunkside BSA-101XXXX Option switching is combined with Directory Assistance Switching. The combination of Trunkside BSA-101XXXX Option Switched Access Service with Directory Assistance Service is provided as set forth in section 9. following. Trunkside BSA-101XXXX Option may not be switched, in the terminating direction, to Switched Access Service Trunkside BSAs.

6. Switched Access Service (Cont'd)

6.3 Provision and Description of Switched Access BSAs (Cont'd)

6.3.2 Trunkside BSA (Cont'd)

(C) Trunkside BSA-101XXXX Option (Cont'd)

(1) General Description (Cont'd)

The Telephone Company will establish a trunk group or groups for the customer at end office switches or access tandem switches where Trunkside BSA-101XXXX Option Switching is provided. When required by technical limitations, a separate trunk group will be established for each type of Trunkside BSA-101XXXX Option switching arrangement provided. Different types of Trunkside BSA-101XXXX Option or other switching arrangements may be combined in a single trunk group at the option of the Telephone Company.

The access code for Trunkside BSA-101XXXX Option switching is a uniform access code of the form 101XXXX. These uniform access codes will be the assigned access numbers of all Trunkside BSA-101XXXX Option access provided to the customer by the Telephone Company. No access code is required for calls which originate from a WATS Access Line (WAL) Service. No access code is required for calls to a customer over Trunkside BSA-101XXXX Option Switched Access Service if the end user's telephone exchange service, the Pay Telephone Service Provider's Telephone Service, or the customer's Lineside BSA Switched Access Service is arranged for presubscription to that customer, as set forth in 13 following.

Calls originating from a WAL Service by the end user's dialing 0+500+NXX, 1+500+NXX, Toll Free Code+NXX+XXXX, 1+Toll Free Code+NXX-XXXX, 900+NXX-XXXX, 0+900+NXX-XXXX, or 1+900+NXX-XXXX will be routed to the Switched Access Service of the 500, Toll Free, or 900 service provider. Calls originating from a WAL Service by the end user's dialing unassigned NXXs, local operator assistance (0-), service codes (211, (800) 275-2355 and 911), directory assistance (411) and 101XXXX access codes will not be completed.

When the 101XXXX access code is used, Trunkside BSA-101XXXX Option switching also provides for dialing the digit 0 for access to the customer's operator, 911 for access to the Telephone Company's emergency reporting service, or the end-of-dialing digit (#) for cut through access to the customer's premises.

6. Switched Access Service (Cont'd)

6.3 Provision and Description of Switched Access BSAs (Cont'd)

6.3.2 Trunkside BSA (Cont'd)

(C) Trunkside BSA-101XXXX Option (Cont'd)

(1) General Description (Cont'd)

Trunkside BSA-101XXXX Option switching will be arranged to accept calls from telephone exchange service, Public Telephone Service or Lineside BSA locations without the need for dialing 101XXXX uniform access code. Each telephone exchange service line, Public Telephone Service Line or Lineside BSA may be marked with a presubscription code to identify which 101XXXX code its calls will be directed to for interLATA service. Presubscription codes are applied as set forth in Section 13 following.

When a customer has had Trunkside BSA - 950 Option access in an end office and subsequently replaces the Trunkside BSA - 950 Option access with Trunkside BSA-101XXXX Option access, at the customer's request and where facilities permit, the Telephone Company, will, for a period of 90 days, direct calls dialed by the customer's end users using the customer's previous Trunkside BSA - 950 Option access code to the customer's Trunkside BSA-101XXXX Option access service. The customer must be prepared to handle normally dialed Trunkside BSA-101XXXX Option calls dialed with the Trunkside BSA - 950 Option access code which require the customer to receive additional address signaling from the end user. Such calls will be rated as Trunkside BSA-101XXXX Option.

At the option of the customer, Switched 56 Kilobit Service as specified following is available for use with Trunkside BSA-101XXXX Option. Switched 56 Kilobits traffic is ordered as set forth in 5.2 preceding and is delivered to the customer via separate Trunkside BSA-101XXXX Option trunks capable of supporting 56 Kbps digital transmission.

Switched 56 Kilobit service is an arrangement whereby customers may receive, or send, data at a speed of 56 Kbps from designated switches over dedicated trunks. The number dialed by the customer's end user shall be a seven or ten digit number in the form of NXX-XXXX, 1+NXX-XXXX, 101XXXX + NXX-XXXX, NPA+NXX-XXXX, 1+NPA+NXX-XXXX, or 101XXXX + NPA+NXX-XXXX, and when the end office is equipped for International Direct Distance Dialing (IDDD), 011+CC+NN.

6. Switched Access Service (Cont'd)

6.3 Provision and Description of Switched Access BSAs (Cont'd)

6.3.2 Trunkside BSA (Cont'd)

(C) Trunkside BSA-101XXXX Option (Cont'd)

(1) General Description (Cont'd)

All rates and charges normally applicable to Trunkside BSA-101XXXX Option i.e., non-recurring, monthly recurring, and usage sensitive apply to Switched 56 Kilobit Service. Additionally, a per Switched 56 Kilobit access minute of use charge specified in Section 6.1.2(B)(6) preceding and Section 6.9.7 following, apply to Switched 56 Kilobit Service.

This option is not available in combination with out of band signaling.

At the option of the customer, Operator Transfer Service as specified following is available for use with Trunkside BSA-101XXXX Option Operator Transfer Service is ordered as set forth in 5.2 preceding and is provided to the customer via separate Trunkside BSA-101XXXX Option trunks dedicated to Operator Transfer Service traffic.

Operator Transfer Service is an arrangement in which Telephone Company operators transfer 0 minus end user dialed calls, i.e., the end user dials 0 with no additional digits, to the customer designated by the end user.

The operator transfer function will be performed in the following manner:

- The operator answers the end user 0 minus dialed call.

- Initially, the Operator will direct the end user to dial the interexchange carrier on a direct basis. If the end user insists that the Operator complete the call, the operator will ask the end user to identify the Operator Services Provider or customer to which they desire to be connected. The operator will then transfer the call to the designated service provider.

- If the end user has no preference, or the identified service provider has not subscribed to Operator Transfer Service, the end user will be asked to select from a list of available service providers.

6. Switched Access Service (Cont'd)

6.3 Provision and Description of Switched Access BSAs (Cont'd)

6.3.2 Trunkside BSA (Cont'd)

(C) Trunkside BSA-101XXXX Option (Cont'd)

(1) General Description (Cont'd)

The list of available Operator Transfer Service customers will be updated monthly. The order in which customers will be read to end users will be initially determined by lottery. For each subsequent monthly update, following the initial order selection, the customer in the first position on the list will be moved to the last position on the list. All other customers on the list will be moved up one position, e.g., 3rd to 2nd, 2nd to 1st, etc. New Operator Transfer Service customers will be placed at the bottom of the list of customers pending the next monthly update.

0 minus Public Coin calls will be transferred to the end user designated customer. When the call is coin sent-paid, the customer, in order to accept such calls, will be required to order signalling as specified in TR-TSY-000506 and TR-NPL-00258.

The customer may receive inband, multi-wink, or expanded inband coin control signalling, where available, from end offices served by an Operator Services Access Point. Different signalling types cannot be mixed on a single trunk group.

All rates and charges normally applicable to Feature Group D, i.e., nonrecurring, monthly recurring, and usage sensitive, apply to Operator Transfer Service. Additionally, a charge as specified in Section 6.2.4(A)(8) preceding, and Section 6.9.8 following, is assessed the customer per 0 minus call transferred.

6. Switched Access Service (Cont'd)

6.3 Provision and Description of Switched Access BSAs (Cont'd)

6.3.2 Trunkside BSA (Cont'd)

(C) Trunkside BSA-101XXXX Option (Cont'd)

(2) Trunkside BSA-101XXXX Option Optional Features and BSEs

(a) Common Switching

(1) Automatic Number Identification (BSE)
(2) Service Class Routing (Optional Feature)
(3) Alternate Traffic Routing (BSE)
(4) International Carrier Option (Optional Feature)
(5) Code Screening for use with WATS Access Line Service (Optional Feature)
(6) Hunt Group Arrangement for Use with WATS Access Line Service (Optional Feature)
(7) Uniform Call Distribution Arrangement for Use with WATS Access Line Service (Optional Feature)
(8) Nonhunting Number for Use with Hunt Group Arrangement or Uniform Call Distribution Arrangement for Use with WATS Access Line Service (Optional Feature)
(9) Overflow Advance Arrangement for Use with WATS Access Line Service (Optional Feature)
(10) Calling Party Number (Optional Feature) *
(11) Charge Number (BSE)
(12) Carrier Selection Parameter (Optional Feature)
(13) Flexible Automatic Number Identification (BSE)
(14) 900 Access Service

(b) Transport Termination

(1) Operator Trunk, Full Feature Arrangement

* Calling Party Number is not offered where it is not technically feasible.

6. Switched Access Service (Cont'd)

6.3 Provision and Description of Switched Access BSAs (Cont'd)

6.3.2 Trunkside BSA (Cont'd)

(C) Trunkside BSA-101XXXX Option (Cont'd)

(2) Trunkside BSA-101XXXX Option Optional Features and BSEs (Cont'd)

(c) Switched Transport

(1) Supervisory Signaling (as set forth in section 6.1.2(A)(7)(a) preceding)
(2) Out of Band Signaling (as set forth in section 6.1.2(A)(7)(e) preceding)
(3) Common Channel Signaling Access Service
(4) Billing Validation Service
(5) Toll Free Data Base Access Service
(6) 500 Access Service

(d) Line Termination

(1) Dialed Number Identification Service
(2) Answer Supervision

(3) Transmission Specifications

Trunkside BSA is provided with either Type A, Type B or Type C Transmission Specifications as follows:

- When routed directly to the end office either Type B or C is provided.
- When routed to an access tandem or TOPS tandem only Type A is provided.
- Type A is provided on the transmission path from the access of TOPS tandem to the end office.

Type C Transmission Specifications are provided with Interface Group 1. Type A and Type B Transmission Specifications are provided with Interface Groups 2 through 10.

6. Switched Access Service (Cont'd)

6.3 Provision and Description of Switched Access BSAs (Cont'd)

6.3.2 Trunkside BSA (Cont'd)

(C) Trunkside BSA-101XXXX Option (Cont'd)

(3) Transmission Specifications (Cont'd)

Type DA Data Transmission Parameters are provided for the transmission path between the customer's premises and the access of TOPS tandem and between the access or TOPS tandem and the end office. Type DA Data Transmission Parameters are provided with Trunkside BSA-101XXXX Option for the transmission path between the customer's premises and the end office when directly routed to the end office.

(4) Testing Capabilities

Trunkside BSA-101XXXX Option is provided, in the terminating direction where equipment is available, with seven digit access to balance (100 type) test line, milliwatt (102 type) test line, nonsynchronous or synchronous test line, automatic transmission measuring (105 type) test line, data transmission (107 type) test line, loop around test line, short circuit test line and open circuit test line. In addition to the tests described in 6.1.5 preceding which are included with the installation of service, additional Cooperative Acceptance Testing, Cooperative Scheduled Testing, Manual Scheduled Testing and Nonscheduled Testing are available as set forth in 13.3.4 following for Trunkside BSA-101XXXX Option.

6. Switched Access Service (Cont'd)

6.3 Provision and Description of Switched Access BSAs (Cont'd)

6.3.3 Dedicated Network Access Link (DNAL) BSA

(A) General Description

(1) The Dedicated Network Access Link (DNAL) BSA provides a connection between the customer designated premises and a Telephone Company switch or central office for the transfer of data from the switch or central office to the customer premises.

(2) The DNAL is primarily used in conjunction with switched access or central office based services requiring a separate link for transmitting signaling or control information. The switched access service determines the requirement for speed, type, and number of DNALs.

(3) The DNAL can be used in association with the Common Switching BSEs as set forth following.

(a) Messaging Services Interface (BSE)

This option is provided as set forth in 6.4.1(AG) following.

(b) Make Busy Arrangements (BSE)

This option is provided as set forth in 6.4.1(AH) following.

6. Switched Access Service (Cont'd)

6.3 Provision and Description of Switched Access BSAs (Cont'd)

6.3.3 Dedicated Network Access Link (DNAL) BSA (Cont'd)

(B) Metallic DNAL

(1) Basic Description

A Metallic DNAL is a unconditioned two-wire channel capable of transmitting low speed varying signals at rates up to 30 baud. This channel is provided by metallic or equivalent facilities. Metallic DNALs are provided between a customer designated premises and a Telephone Company switch or central office. Interoffice metallic DNALs will be limited in length to a total of five route miles per channel.

(2) Technical Specifications packages

	Package MT-			
Parameter	C	1	2	3
DC Resistance Between Conductors	X	X	X	
Loop Resistance	X			X
Shunt Capacitance	X			X

The technical specifications are delineated in Technical Reference TR-NPL-000336.

(3) Channel Interfaces

Compatible channel interfaces are set forth in 7.3.5(A) following.

6. Switched Access Service (Cont'd)

6.3 Provision and Description of Switched Access BSAs (Cont'd)

6.3.3 Dedicated Network Access Link (DNAL) BSA (Cont'd)

(C) Voice Grade DNAL

(1) Basic Description

A Voice Grade DNAL is a channel which provides voice frequency transmission capability in the nominal frequency range of 300 to 3000 Hz and may be terminated as analog two-wire or four-wire. Voice Grade DNALs are provided between a customer designated premises and a Telephone Company switch or central office.

(2) Technical Specifications Packages

The technical specifications for Voice Grade DNALs are delineated in Technical Reference TR-NWT-000335, Issue 3, under the section defining VG-6 capabilities.

(3) Channel Interfaces

The following channel interfaces for Voice Grade DNALs do not require signaling capability: AH, DA, DB, DD, DE, DS, NO, PR and TF.

The following channel interfaces for Voice Grade KNALs require signaling capability: AB, AC, CT, DX, DY, EA, EB, EC, EX, GO, GS, LA, LB, LC, LO, LR, LS, RV and SF.

Compatible channel interfaces are set forth in 6.1.2(A)(6) preceding.

(4) Optional Features and Functions

(a) Conditioning

Conditioning provides more specific transmission characteristics for Voice Grade DNALs. C-Type conditioning controls attenuation distortion and envelope delay distortion.

In addition, a customer may require that either the attenuation distortion or the envelope delay distortion, or both, be improved to more stringent specifications than those provided for C-Type conditioning. In these cases the customer has the option of ordering either Improved Attenuation Distortion or Improved Envelope Delay Distortion, or both, as needed.

6. Switched Access Service (Cont'd)

6.3 Provision and Description of Switched Access BSAs (Cont'd)

6.3.3 Dedicated Network Access Link (DNAL) BSA (Cont'd)

(C) Voice Grade DNAL (Cont'd)

(4) Optional Features and Functions (Cont'd)

(a) Conditioning (Cont'd)

(1) C-Type Conditioning

C-Type Conditioning is provided for the additional control of attenuation distortion and envelope delay distortion on data services. The attenuation distortion and envelope delay distortion specifications for C-Type Conditioning are:

Attenuation Distortion (Frequency Response) Relative to 1004 Hz	
Frequency Range (Hz)	Variation (dB)
504-2804	-1.0 to +3.0
304-3804	-2.0 to +6.0

Envelope Delay Distortion	
Frequencye Range (Hz)	Variation (micro-seconds)
1004-2604	≤ 500
604-2604	≤ 1500
504-2804	≤ 3000

6. Switched Access Service (Cont'd)

6.3 Provision and Description of Switched Access BSAs (Cont'd)

6.3.3 Dedicated Network Access Link (DNAL) BSA (Cont'd)

(C) Voice Grade DNAL (Cont'd)

(4) Optional Features and Functions (Cont'd)

(a) Conditioning (Cont'd)

(2) Improved Attenuation Distortion

Improved attenuation distortion is provided for additional control of attenuation distortion. The improved attenuation distortion specifications are:

Attenuation Distortion
(Frequency Response)
Relative to 1004 Hz

Frequency Range (Hz)	Variation (dB)
404-2804	-1.0 to +2.0
304-3004	-1.0 to +3.0
304-3204	-2.0 to +6.0

(3) Improved Envelope Delay Distortion

Improved envelope delay distortion is provided for additional control of envelope delay distortion. The improved envelope delay distortion specifications are:

Envelope Delay Distortion

Frequency Range (Hz)	Variation (micro-seconds)
1004-2604	≤ 100
804-2604	≤ 200
604-2604	≤ 300
504-2804	≤ 600
504-3004	≤ 3000

6. Switched Access Service (Cont'd)

6.3 Provision and Description of Switched Access BSAs (Cont'd)

6.3.3 Dedicated Network Access Link (DNAL) BSA (Cont'd)

(C) Voice Grade DNAL (Cont'd)

(4) Optional Features and Functions (Cont'd)

(b) Improved Termination and Improved Return Loss

(1) Improved Termination - On Effective Four-Wire Transmission at Four-Wire Point of Termination (applicable to each four-wire port): Provides for a fixed 600 ohm impedance, variable level range and simplex reversal. Telephone Company equipment is required at the customer's premises where this option is ordered. The Improved Termination parameters are delineated in Technical Reference TR-NWT-000335, Issue 3.

(2) Improved Return Loss - On Effective Two-Wire Transmission at Two-Wire Point of Termination: Provides for more stringent Echo Control Specifications. In order for this option to be applicable, the transmission path must be four-wire at one POT and two-wire at the other POT. Placement of Telephone Company equipment may be required at the customer's premises with the two-wire POT. The Improved Return Loss parameters are delineated in Technical Reference TR-NWT-000335, Issue 3.

6. Switched Access Service (Cont'd)

6.3 Provision and Description of Switched Access BSAs (Cont'd)

6.3.3 Dedicated Network Access Link (DNAL) BSA (Cont'd)

(C) Voice Grade DNAL (Cont'd)

(4) Optional Features and Functions (Cont'd)

(c) Data Capability

Data Capability provides transmission characteristics suitable for data communications. Specifically, Data Capability provides for the control of Signal to C-Notched Noise Ratio and intermodulation distortion.

The Signal to C-Notched Noise Ratio and intermodulation distortion parameters for Data Capability are:

(1) Signal to C-Notched Noise Ratio is equal to or greater than 32 dB.

(2) Intermodulation Distortion:

Signal to second order modulation products (R2) is equal to or greater than 38 dB.

Signal to third order modulation products (R3) is equal to or greater than 42 dB.

(d) Effective Four-Wire Transmission with Two-Wire Interface

When a customer requests that an effective Four-Wire channel be terminated with a Two-Wire interface at the customer designated premises, then this optional feature applies. Placement of Telephone Company Equipment (Hybrid) is required at the customer's premises to convert the Four-Wire channel to the Two-Wire POT. When this option is ordered, a Four-Wire channel termination charge applies. Per the voice grade technical references, certain voice grade DNALs are always provisioned as Four-Wire and will be billed as a Four-Wire Channel Termination.

6. Switched Access Service (Cont'd)

6.4 Common Switching and Transport Termination Optional Features and BSEs

Following are descriptions of the various optional features that are available in lieu of, or in addition to, the standard features provided as either Common Switching or Transport Termination options.

The following is a list of the Telephone Company's Open Network Architecture (ONA) Switched Access Basic Service Elements (BSEs) which provides a mapping from the industry standard featurn name to the product name utilized in this tariff.

GENERIC NAME	TELEPHONE COMPANY PRODUCT NAME
Answer Supervision With A Line Side Interface	Answer Supervision With A Line Side Interface
Calling Billing Number Delivery - FG B Protocol - FG D Protocol	Automatic Number Identification
Carrier Selection On Reverse Charge	Toll Free Access Service
Make Busy Key	Make Busy Arrangement
Message Desk (SMDI) Message Waiting Indicator - Activation (audible)	Messaging Services Interface
Alternate Routing	Alternate Traffic Routing
Called Directory Number Delivery via DID	Direct Inward Dialing Service
DID Trunk Queuing	DID Trunk Queuing

6. Switched Access Service (Cont'd)

6.4 Common Switching and Transport Termination Optional Features and BSEs (Cont'd)

GENERIC NAME	TELEPHONE COMPANY PRODUCT NAME
Multiline Hunt Group	Hunting Service Arrangement
Multiline Hunt Group	Hunting Service Arrangement Circular
Multiline Hunt Group	Hunting Service Arrangement Preferred
Multiline Hunt Group - Individual Access To Each Port In Hunt Group	Non-Hunt Directory Numbers
Multiline Hunt Group - Uniform Call Distribution Line Hunting	Uniform Call Distribution
Multiline Hunt Group - Uniform Call Distribution With Queuing	
Three-Way Call Transfer	Three-Way Call Transfer
Three-Way Calling	Three-Way Calling
Flexible ANI Information Digits	Flexible Automatic Number Identification

6. Switched Access Service (Cont'd)

6.4 Common Switching and Transport Termination Optional Features and BSEs (Cont'd)

6.4.1 Common Switching Optional Features and BSEs Where Available

(A) Call Denial on Line or Hunt Group (Optional Feature)

This screening option limits terminating Lineside BSA and Feature Group A calls to completion within the LATA where the Lineside BSA and Feature Group A line resides. InterLATA and international calls are blocked as well as calls which may potentially terminate outside the LATA. Examples of such calls are:

- Operator-handled calls (0-, 00-);
- Calls to 950 NXX codes;
- Calls to the 900 NPA;
- Calls prefixed with 101XXXX

This list does not necessarily include all the types of calls which may be blocked in a given jurisdiction.

Terminating Lineside BSA and Feature Group A calls to the Toll Free NPA are not blocked under this option.

When this option is chosen in jurisdictions where intraLATA competition is permitted, the Telephone Company completes all terminating intraLATA calls since the 101XXXX prefix is blocked.

Blocked calls are routed to a reorder tone or recorded announcement. This feature is provided in all Telephone Company electronic end offices and, where available, in electromechanical end offices. This option is available with Lineside BSA and Feature Group A.

(B) Hunt Group Arrangement (Optional Feature)

This option provides the ability to sequentially access one of two or more line side connections in the originating direction, when the access code of the line group is dialed. This feature is provided in all Telephone Company end offices. It is available with Feature Group A. MTS/WATS-type FX/ONAL FGA services cannot be mixed in the same hunt group arrangement. Additionally, multiple customers providing service to the same end user may not be combined in a single hunt group unless the Switched Transport mileage band for each customer is the same, i.e., the distance between the customer's serving wire center and the dial tone office to which service is ordered.

6. Switched Access Service (Cont'd)

6.4 Common Switching and Transport Termination Optional Features and BSEs (Cont'd)

6.4.1 Common Switching Optional Features and BSEs Where Available (Cont'd)

(C) Service Code Denial on Line or Hunt Group

This option allows for the screening of terminating Lineside BSA and FGA calls to disallow completion of calls to 0-, 555 and N11 (e.g., 411, (800) 275-2355 and 911). This feature is provided where available in all Telephone Company electronic end offices and electromechanical end offices. It is available with Lineside BSA and FGA.

(D) Uniform Call Distribution (Optional Feature and BSE)

When an incoming call to the Directory Number (DN) of the multiline hunt group (MLHG) is received, hunting should begin at the start-hunt terminal and proceed as a circular hunt.

When an idle terminal is found, the call should be completed, and immediately (even before another call attempts to terminate) a new circular hunt should begin for an idle terminal. This hunt should begin at the terminal number after the one that the call was just completed. When an idle terminal is found, the hunt should stop and the idle terminal number should be stored as the start-hunt terminal for the next incoming call to the DN of the MLHG. If no idle terminal is found after a complete circular hunt is made, the stored-hunt DN should be the DN of the last completed call.

If an incoming call is not to the DN of the MLHG but to a DN associated with one of the terminals of the MLHG instead, the start-hunt terminal as defined above for Uniform Call Distribution (UCD) should not be used. Instead, the incoming call should be directed to the terminal associated with the called DN directly. If the called DN terminal is busy, a circular hunt should begin at the called DN terminal and continue until an idle terminal is found. If none is found, the incoming call should be given busy treatment. In either case, the next incoming call to the MLHG DN uses a start-hunt number as determined above, which is unaffected by the call to a terminal's direct DN.

Calls made to a UCD MLHG equipped with the queuing feature will complete immediately if there is an idle terminal in the UCD hunt group. However, if all terminals in the UCD hunt group are busy, the call is placed on queue and waits its turn to be served.

6. Switched Access Service (Cont'd)

6.4 Common Switching and Transport Termination Optional Features and BSEs (Cont'd)

6.4.1 Common Switching Optional Features and BSEs Where Available (Cont'd)

(D) Uniform Call Distribution (Optional Feature and BSE) (Cont'd)

The call that has been on queue the longest will be the first call served when a line becomes available. The customer determines the maximum number of calls that can be placed on queue. If the incoming call cannot be placed on queue, the calling party receives busy tone. It is available with Lineside BSA and Feature Group A.

(E) Non-Hunt Directory Numbers (Optional Feature and BSE)

This option provides an arrangement for an individual line within a multiline hunt or uniform call distribution group that provides access to that line within the hunt or uniform call distribution group when it is idle or provides busy tone when it is busy, when the nonhunting number is dialed. Where available, this feature is provided in Telephone Company electronic end offices only. It is available with Lineside BSA and Feature Group A.

(F) Automatic Number Identification (ANI) (Optional Feature and BSE)

This option provides the automatic transmission of a seven or ten digit number and information digits to the customer's premises for calls originating in the LATA, to identify the calling station. This option includes provision of originating line screening information for the line from which the call originates. The ANI feature is an end office software function which is associated on a call-by-call basis with (1) all individual transmission paths in a trunk group routed directly between an end office and a customer's premises or, where technically feasible, with (2) all individual transmission paths in a trunk group between an end office and an access tandem, and a trunk group between an access tandem and a customer's premises.

The seven digit ANI telephone number is available with Trunkside BSA - 950 Option, Trunkside BSA - MTS/WATS Option, Feature Group B and C. With these Feature Groups, technical limitations may exist in Telephone Company switching facilities which requires ANI to be provided only on a directly trunked basis. ANI will be transmitted on all calls except those originating from multiparty lines, coin stations and coinless pay telephones using Trunkside BSA - 950 Option and Feature Group B, or when an ANI failure has occurred.

6. Switched Access Service (Cont'd)

6.4 Common Switching and Transport Termination Optional Features and BSEs (Cont'd)

6.4.1 Common Switching Optional Features and BSEs Where Available (Cont'd)

(F) Automatic Number Identification (ANI) (Optional Feature and BSE) (Cont'd)

The ten digit ANI telephone number is only available with Trunkside BSA-101XXXX Option and Feature Group D. When out of band signaling is specified, the customer may obtain an ANI equivalent by ordering the Charge Number optional feature, as specified in 6.4.1(Y) following. The ten-digit ANI telephone number consists of the Numbering Plan Area (NPA) plus the seven-digit ANI telephone number. The ten-digit ANI telephone number will be transmitted on all calls except those identified as multiparty line or ANI failure, in which case only the NPA will be transmitted (in addition to the information digit described following).

With Trunkside BSA - MTS/WATS Option and Feature Group C, ANI is provided from end offices at which Telephone Company recording for end user billing is not provided, or where it is not required, as with Toll Free service. It is not provided from end offices for which the Telephone Company needs to forward ANI to its recording equipment.

Where ANI cannot be provided, e.g., on call from 4-and 9-party services, information digits will be provided to the customer.

The information digits identify: (1) telephone number is the station billing number - no special treatment required, (2) multiparty line - telephone number is a 4- or 8-party line and cannot be identified - number must be obtained via an operator or in some other manner, (3) ANI failure has occurred in the end office switch which prevents identification of calling telephone number - must be obtained by operator or in some other manner, (4) hotel/motel originated call which requires room number identification, (5) coinless station, hospital, inmate, etc. call which requires special screening or handling by the customer, and (6) call is an Automatic Identified Outwarded Dialed (AIOD) call from customer premises equipment. The ANI telephone number is the listed telephone number of the customer and is not the telephone number of the calling party. These ANI information digits are available with Trunkside BSA - 950 Option, Trunkside BSA - MTS/WATS Option, Trunkside BSA-101XXXX Option and Feature Groups B, C, and D.

These information digits will be transmitted as agreed to by the customer and the Telephone Company.

6. Switched Access Service (Cont'd)

6.4 Common Switching and Transport Termination Optional Features and BSEs (Cont'd)

6.4.1 Common Switching Optional Features and BSEs Where Available (Cont'd)

(F) Automatic Number Identification (ANI) (Optional Feature and BSE) (Cont'd)

The ANI feature can be used for billing and collection, routing, screening, and completion of the originating telephone subscriber's call or transaction, or for services directly related to the originating telephone subscriber's call or transaction;

ANI shall not be reused or sold without first (1) notifying the originating telephone subscriber and (2) obtaining the affirmative consent of such subscriber for such reuse or sale; and

ANI or any information derived from ANI shall not be disclosed except as permitted by (1) and (2) above for any purpose other than (i) performing the services or transactions that are the subject of the originating telephone subscriber's call, (ii) ensuring network performance security, and the effectiveness of call delivery, (iii) compiling, using, and disclosing aggregate information, and (iv) complying with applicable law or legal process.

(G) Up to 7 Digit Outpulsing of Access Digits to Customer (Optional Feature)

This option provides for the end office capability of providing up to 7 digits of the uniform access code (950-XXXX) to the customer's premises. The customer can request that only some of the digits in the access code be forwarded. The access code digits would be provided to the customer's premises using multifrequency signaling, and transmission of the digits would precede the forwarding of ANI if that feature were provided. It is available with Trunkside BSA - 950 Option and Feature Group B.

(H) Revertive Pulse Address Signaling (Optional Feature)

This option provides for a dc pulsing arrangement that transmits intelligence in the following manner:

(1) The equipment at the originating location presets itself to represent the number of pulses required and to count the pulses received from the terminating location.

6. Switched Access Service (Cont'd)

6.4 Common Switching and Transport Termination Optional Features and BSEs (Cont'd)

6.4.1 Common Switching Optional Features and BSEs Where Available (Cont'd)

(H) Revertive Pulse Address Signaling (Optional Feature) (Cont'd)

(2) The equipment at the terminating location transmits a series of pulses by the momentary grounding of its battery supply until the originating location breaks the dc path to indicate that the required number of pulses has been counted.

This option is available with Trunkside BSA - MTS/WATS Option and Feature Group C.

(I) Delay Dial Start-Pulsing Signaling (Optional Feature)

This option provides a method of indicating to the near end trunk circuit readiness to accept address signaling information by the far end trunk circuit. Delay dial is often referred to as an off-hook, on-hook signaling sequence. The delay dial signal is the off-hook interval and the start-pulsing signal is the on-hook interval. With integrity check, the calling office will not outpulse until a delay dial (off-hook) signal followed by a start-pulsing (on-hook) signal has been identified at the calling office. This option is available with Trunkside BSA - MTS/WATS Option and Feature Group C.

(J) Immediate Dial Pulse Address Signaling (Optional Feature)

This option provides for the forwarding of dial pulses from the Telephone Company end office to the customer without the need of a start-pulsing signal from the customer. It is available with Trunkside BSA - MTS/WATS Option and Feature Group C.

(K) Dial Pulse Address Signaling (Optional Feature)

This option provides for the transmission of number information, e.g., called number, between the end office switching system and the customer's premises (in either direction) by means of direct current pulses. It is available with Trunkside BSA - MTS/WATS Option and Feature Group C.

6. Switched Access Service (Cont'd)

6.4 Common Switching and Transport Termination Optional Features and BSEs (Cont'd)

6.4.1 Common Switching Optional Features and BSEs Where Available (Cont'd)

(L) Service Class Routing (Optional Feature)

This option provides the capability of directing originating traffic from an end office to a trunk group to a customer designated premises based on the line class of service (e.g., coin, multiparty or hotel/motel), service prefix indicator (e.g., 0-, 00-, 0+, 01+ or 011+) or service access code (e.g., Toll Free or 900). It is provided in suitably equipped end office or access tandem switches and is available with Trunkside BSA - MTS/WATS Option, Trunkside BSA-101XXXX Option and Feature Groups C and D.

(M) Alternate Traffic Routing (Optional Feature and BSE)

This option provides the capability of directing originating traffic from an end office (or appropriately equipped access tandem) to a trunk group (the "high usage" group) to a customer designated premises until that group is fully loaded, and then delivering additional originating traffic (the "overflowing" traffic) from the same end office or access tandem to a different trunk group (the "final" group) to a second customer designated premises. The customer shall specify the last trunk CCS desired for the high usage group. This option is provided in suitably equipped end office or access tandem switches and is available with Trunkside BSA - 950 Option, Trunkside BSA - MTS/WATS Option, Trunkside BSA-101XXXX Option and Feature Groups B, C, or D.

(N) (Reserved for future use)

(O) (Reserved for future use)

6. Switched Access Service (Cont'd)

6.4 Common Switching and Transport Termination Optional Features and BSEs (Cont'd)

6.4.1 Common Switching Optional Features and BSEs Where Available (Cont'd)

(P) International Carrier Option (Optional Feature)

This option allows for Trunkside BSA-101XXXX Option and Feature Group D end offices or access tandem switches equipped for International Direct Distance Dialing to be arranged to forward the international calls of one or more international carriers to the customer (i.e., the Telephone Company is able to route originating international calls to a customer other than the one designated by the end user either through presubscription or 101XXXX dialing). This arrangement requires provision of written verification to the Telephone Company that the customer is authorized to forward such calls. The written verification must be in the form of a letter of agency authorizing the customer to order the option on behalf of the international carrier. This option is only provided at Telephone Company end offices or access tandems equipped for International Direct Distance Dialing. It is available with Trunkside BSA-101XXXX Option and Feature Group D.

(Q) Panel Call Indicator Address Signaling (Optional Feature)

This option provides a dc pulsing arrangement in which each digit is transmitted as a series of four marginal and polarized impulses. It is available with Trunkside BSA - MTS/WATS Option and Feature Group C.

(R) Overflow Advance Arrangement for Use with WATS Access Line Service (Optional Feature)

This option, which is provided in association with two or more WATS Access Line Service Groups, provides for the automatic overflow of calls to a WATS Access Line Service Group, when that group has exceeded its call capacity or to another WATS Access Line Service Group with a numeric designation equal to or greater than that of the overflowing WATS Access Line Service Groups. This arrangement does not provide for call overflow from a group with a higher numeric designation to one with a lower one.

6. Switched Access Service (Cont'd)

6.4 Common Switching and Transport Termination Optional Features and BSEs (Cont'd)

6.4.1 Common Switching Optional Features and BSEs Where Available (Cont'd)

(S) Code Screening for Use with WATS Access Line Service (Optional Feature)

This option provides the ability to verify that the originating party is dialing a geographically predesignated (bound) area, or an unbound area, called party address. This option is provided in all Telephone Company electronic end offices and, where available, in electromechanical end offices in which WATS Access Line Services are provided. It is available with Lineside BSA, Trunkside BSA - 950 Option, Trunkside BSA - MTS/WATS Option, Trunkside BSA-101XXXX Option, and Feature Groups A, B, C and D.

The screening portion of this option which allows for the screening of intraLATA calls is required when intraLATA competition is prohibited by the state jurisdiction in which service is provided. Such screening may be used by the Telephone Company to block intraLATA calls.

(T) Hunt Group Arrangement for Use with WATS Access Lines Service (Optional Feature)

This option provides the ability to sequentially access one of two or more WATS Access Line Service (e.g., Toll Free Service access lines) in the terminating direction, when the hunting number of the WATS Access Line Service group is forwarded from the customer to the Telephone Company. This feature is provided in all Telephone Company end offices in which WATS Access Line Service is provided. It is available with Lineside BSA, Trunkside BSA - 950 Option, Trunkside BSA - MTS/WATS Option, Trunkside BSA-101XXXX Option and Feature Groups A, B, C and D.

(U) Uniform Call Distribution Arrangement for Use with WATS Access Line Service (Optional Feature)

This option provides a type of multiline hunting arrangement which provides for an even distribution of terminating calls among the available WATS Access Line Service in the hunt group. Where available, this feature is only provided in Telephone Company electronic end offices in which WATS or Access Line Service is provided. For WATS Access Lines it is available with Lineside BSA, Trunkside BSA - 950 Option, Trunkside BSA - MTS/WATS Option, Trunkside BSA-101XXXX Option and Feature Groups A, B, C and D.

6. Switched Access Service (Cont'd)

6.4 Common Switching and Transport Termination Optional Features and BSEs (Cont'd)

6.4.1 Common Switching Optional Features and BSEs Where Available (Cont'd)

(V) Nonhunting Number for Use with Hunt Group Arrangement or Uniform Call Distribution Arrangement for Use with WATS Access Line Service (Optional Feature)

This option provides an arrangement for an individual WATS Access Line Service within a multiline hunt or uniform call distribution group that provides access to that WATS or Access Line Service within the hunt or uniform call distribution group when it is idle or provides busy tone when it is busy, when the non hunting number is dialed. Where available, this feature is only provided in Telephone Company electronic end offices in which WATS Access Line Service is provided. It is available with Lineside BSA, Trunkside BSA, - 950 Option, Trunkside BSA - MTS/WATS Option, Trunkside BSA-101XXXX Option and Feature Groups A, B, C and D.

(W) Toll Billing Exception (Optional Feature)

This option provides an arrangement for the screening and blocking of calls where technically feasible, placed through Operator Services System equipment, which terminate on Lineside BSA or Feature Group A on a collect basis, and prevents calls from being billed to a Feature Group A number on a third party basis. It will not block calls made from non-operator services handling, Independent Telephone Company calls that are not operator services handled, or cord board assisted calls. The option is available on Lineside BSA and Feature Group A only.

(X) Calling Party Number (CPN) (Optional Feature)

This option provides for the automatic transmission of the calling party's ten-digit telephone number to the customer's premises for calls originating in the LATA. The ten-digit telephone number consists of the NPA plus the seven-digit telephone number, which may or may not be the same as the calling station's charge number. The specific protocol for CPN is contained in Technical Reference GR-905-CORE, Issue 11. This feature is available only with originating Trunkside BSA-101XXXX Option and Feature Group D when out of band signaling is specified.

6. Switched Access Service (Cont'd)

6.4 Common Switching and Transport Termination Optional Features and BSEs (Cont'd)

6.4.1 Common Switching Optional Features and BSEs Where Available (Cont'd)

(X) Calling Party Number (CPN) (Optional Feature) (Cont'd)

The Telephone Company will transmit a "privacy indicator" as part of the CPN information in those jurisdictions where end users may elect that their CPN information not be passed to the called party, and where an end user has taken the actions necessary to ensure that their CPN is so blocked.

(Y) Charge Number (CN) (Optional Feature and BSE)

This option provides for the automatic transmission of the ten-digit billing number of the calling station number and originating line information. The specific protocol for CN is contained in Technical Reference GR-905-CORE, Issue 11. This feature is available only with originating Trunkside BSA-101XXXX Option and Feature Group D when out of band signaling is specified.

The Charge Number feature can be used for billing and collection, routing, screening, and completion of the originating telephone subscriber's call or transaction, or for services directly related to the originating telephone subscriber's call or transaction;

Charge Numbers shall not be reused or sold without first (A) notifying the originating telephone subscriber and (B) obtaining the affirmative consent of such subscriber for such reuse or sale; and

Charge Numbers or any information derived from ANI shall not be disclosed except as permitted by (1) and (2) above for any purpose other than (i) performing the services or transactions that are the subject of the originating telephone subscriber's call, (ii) ensuring network performance security, and the effectiveness of call delivery, (iii) compiling, using, and disclosing aggregate information, and (iv) complying with applicable law or legal process.

6. Switched Access Service (Cont'd)

6.4 Common Switching and Transport Termination Optional Features and BSEs (Cont'd)

6.4.1 Common Switching Optional Features and BSEs Where Available (Cont'd)

(Z) Carrier Selection Parameter (CSP)* (Optional Feature)

This option provides for the automatic transmission of a signaling indicator which signifies to the customer whether the call being processed originated from a presubscribed end user of that customer. The specific protocol for CSP is contained in Technical Reference GR-905-CORE, Issue 11. This feature is available only with originating Trunkside BSA-101XXXX Option and Feature Group D when out of band signaling is specified.

(AA) Access Transport Parameter (ATP) (Optional Feature)

This option provides for the transmission of CPE compatibility information from the originating switch to the customer's premises and, on terminating access, from the customer's premises to the terminating switch. All of the information is supplied by the calling party. This feature is available only with originating Trunkside BSA-101XXXX Option and Feature Group D when out of band signaling is specified. The specific protocol for ATP is contained in Technical Reference GR-905-CORE, Issue 11.

(AB) Answer Supervision With a Line Side Interface (BSE)

This option provides an answer supervisory signal to the customer premises for terminating calls to indicate the called location has returned an answer supervisory signal to the Telephone Company end office where the customer's Lineside BSA open end (dial tone end office) is located. This option is only available from appropriately equipped Telephone Company electronic end office switches. It is available with Lineside BSA only.

(AC) Hunting Service Arrangements (BSE)

This feature offers the ability to sequentially access terminals in a hunt group, beginning with the start-hunt terminal until an idle terminal is found or the last terminal number is reached, when the access number of the line group is dialed. If all terminals are busy, a busy tone will be returned to the calling party. It is available with Lineside BSA.

6. Switched Access Service (Cont'd)

6.4 Common Switching and Transport Termination Optional Features and BSEs (Cont'd)

6.4.1 Common Switching Optional Features and BSEs Where Available (Cont'd)

(AD) Hunting Service Arrangements: Preferred (BSE)

This option allows a separate hunting list to be associated with each terminal in a hunt group. When a call is made directly to a busy terminal with a MLHG equipped with preferential hunting, a linear hunt is performed over the special ordered list of preferential hunt terminals. The call will terminate at the first idle terminal in the preferential hunt list. If all of terminals in the preferential hunt are busy, then a secondary hunt should be conducted over all of the terminals. The secondary hunt will be in the regular hunt sequence, not the preferential list. This feature is not available with the Uniform Call Distribution and Non-Hunt Numbers features. This feature is available with Lineside BSA.

(AE) Hunting Service Arrangements: Circular (BSE)

This feature offers the ability to sequentially access terminals in a hunt group, with the hunt sequence starting over again at the start-hunt terminal if all terminals are busy. If all terminals are busy in the second pass, a busy tone will be returned to the calling party. This feature is available with Lineside BSA.

(AF) Three-Way Call Transfer (BSE)

This option gives the customer the capability of including another end user on an already established call. After establishing the call, the customer may drop his connection without disconnecting the two end users. While the two end users are connected, usage continues to be recorded and will be charged to the customer. This option is available from appropriately equipped electronic offices. In some switches the customer and originating end user must be served out of the same central office in order for the customer to drop off of the line and keep the two end users connected. This feature is available with Lineside BSA.

6. Switched Access Service (Cont'd)

6.4 Common Switching and Transport Termination Optional Features and BSEs (Cont'd)

6.4.1 Common Switching Optional Features and BSEs Where Available (Cont'd)

(AG) Messaging Services Interface (BSE)

Messaging Services Interface provides messaging capability on an intraswitch basis. This option provides for the call status information of a call terminating on Lineside BSA hunting arrangement. This option provides the calling number, called number, the identification of the called multiline hunt group assigned to the customer's end user, and the call reason. In addition, the option provides the ability to activate or deactivate Message Waiting Indication. Message Waiting Indication may be activated as long as the service where Message Waiting indication is to be activated is equipped with the message waiting feature. The call status information is transmitted to the customer's premises and the signal to activate or deactivate Message Waiting Indication is transmitted from the customer's message desk terminal equipment. The customer shall provide the appropriate customer premises equipment (CPE) to store, display, or print out the transmitted call status information and the equipment to initiate the signal to activate or deactivate Message Waiting Indication. This option is only available from appropriately equipped Telephone Company electronic end office switches. The customer subscribing solely to MSI service shall obtain a Voice Grade Dedicated Network Link as set forth in Section 6.3.3 preceding to each and every Telephone Company central office switch where the capability is desired. The capabilities are available with Lineside BSA with multiline hunt group arrangement.

Premier Messaging Services Interface (PMSI)

Premier Messaging Services Interface (PMSI) is an optional enhancement to Messaging Services Interface (BSE). PMSI is similar to Messaging Services Interface (BSE), except that it utilizes the Signalling System 7 (SS7) Network to pass calling and called number information between central offices. With PMSI capability, the customer is not required to obtain a Voice Grade Dedicated Network Link to each Telephone Company central office switch where messaging capability is desired. With PMSI, the customer can provide messaging capability to all end users in a LATA area provided those end users reside in central offices that are interconnected via SS7 and are equipped with the required software. PMSI requires MSI service between the customer's equipment and at least one central office.

6. Switched Access Service (Cont'd)

6.4 Common Switching and Transport Termination Optional Features and BSEs (Cont'd)

6.4.1 Common Switching Optional Features and BSEs Where Available (Cont'd)

(AG) Messaging Services Interface (BSE) (Cont'd)

Signaling System 7 Message Waiting Indicator (SS7MWI) Signaling Service

(1) Signaling System 7 Message Waiting Indicator (SS7MWI) Signaling Service permits the customer to provide Signaling System 7 (SS7) Message Waiting Indicator (MWI) Transaction Capabilities Application Part (TCAP) messages to the Telephone Company for delivery to Telephone Company switches that serve suitably equipped lines of those end users who subscribe to the customer's voice messaging service. MWI TCAP messages are originated by the customer's equipment, i.e., Voicemail Platform, and addressed and delivered to a designated Telephone Company Signaling Transfer Point (STP) pair in the LATA in which the customer's subscribing end user receives service.

(2) The Telephone Company uses its SS7 capabilities to determine the switch serving the end user, and to deliver the MWI TCAP message to that switch. The message causes the switch to set or reset MWI on the end user's line. These messages allow the customer to notify its end user that voice messages are awaiting retrieval, or to clear the message waiting notification once the end user has acknowledged those messages.

(3) SS7MWI Signaling Service is offered only to provide signaling to Telephone Company switches within the LATA in which the signaling was handed off to the Telephone Company, and will be available only in LATAs where the Telephone Company has STPs available to accept SS7 messages associated with the service. A list of LATAs where the Telephone Company has STPs follows in this section. The customer must hand-off only those messages that are intended for end users served by capable Telephone Company switches in that LATA.

6. Switched Access Service (Cont'd)

6.4 Common Switching and Transport Termination Optional Features and BSEs (Cont'd)

6.4.1 Common Switching Optional Features and BSEs Where Available (Cont'd)

(AG) Messaging Services Interface (BSE) (Cont'd)

Signaling System 7 Message Waiting Indicator (SS7MWI) Signaling Service (Cont'd)

(4) SS7MWI Signaling Service is not available in LATAs where the Telephone company does not have STPs. In those LATAs, services utilizing a Messaging Service Interface (MSI) or Premier Messaging Service Interface (PMSI) can be used to communicate message waiting status to end users' lines. In the event that STPs are deployed in any of those LATAs subsequent to issuance of this tariff, the Telephone Company will offer the service in those LATAs. In the event that the Telephone Company removes STPs from one or more LATAs, it can no longer offer the service in that LATA. In such event, the Telephone Company will provide at least 90 days prior notice of the pending removal of the STPs. Following such removal, the customer will have the option of purchasing Messaging Service Interface (MSI) or Premier Messaging Service Interface (PMSI) service as set forth in this section 6.4.1(AG).

(5) Additionally, SS7MWI Signaling Service can only be used to update MWI for end users served from suitably equipped switching equipment in designated LATA STP's which are capable of responding appropriately to MWI TCAP messages.

(6) The customer is responsible for obtaining SS7 interconnection directly from The Telephone Company under the provisions of Section 6.4.3 of this tariff. The customer of record for the SS7 interconnection shall also be the customer of record for SS7MWI Signaling Service. In the event that the customer chooses to use another SS7 provider to interconnect with The Telephone Company, the customer shall be unable to receive the SS7MWI Signaling Service, and will have to make separate arrangements with the SS7 provider.

6. Switched Access Service (Cont'd)

6.4 Common Switching and Transport Termination Optional Features and BSEs (Cont'd)

6.4.1 Common Switching Optional Features and BSEs Where Available (Cont'd)

(AG) Messaging Services Interface (BSE) (Cont'd)

Signaling System 7 Message Waiting Indicator (SS7MWI) Signaling Service (Cont'd)

(7) SS7MWI Signaling Service shall be ordered separately for each STP pair in each LATA requiring the service. Each such order will be considered a messaging arrangement. Each ASR submitted will contain no more than two (a Primary and a Secondary) Voicemail Platforms per messaging arrangement. If a customer seeks to connect more than two Voicemail Platforms to a given Telephone Company STP pair, an additional ASR will be required for each additional pair of Voicemail Platforms per STP pair in a LATA.

(8) A monthly recurring charge as set forth in Section 6.9.12 following applies per messaging arrangement to allow for the transmission of SS7MWI Signaling Service.

(9) LATAs Served:

LATA	**LATA NAME**
254	CHARLESTON WV
256	CLARKSBURG WV

(AH) Make Busy Arrangements (BSE)

This option allows a customer to busy out a group of lines and to reroute incoming traffic from one group of lines to another group of associated lines, if the customer has more than one group of lines. This option requires a compatible Special Access Voice Grade facility as specified in Section 7.2.3 following. This option is available with Lineside BSA.

This option provides the capability to place one or more lines of a Lineside BSA with multiline hunt group arrangement in a busy or overflow condition. Once the capability is activated, subsequent calls to the lines placed in the busy or overflow condition may be directed to a central office tone, central office announcement or when a remote call forwarding feature is ordered, to an alternate service. The capability is activated by a customer provided key at the customer's premises. The activation signal is transmitted to the Telephone Company central office with the use of a Metallic or Voice Grade Dedicated Network Access Link as set forth in section 6.3.3 preceding. The option is available with Lineside BSA.

6. Switched Access Service (Cont'd)

6.4 Common Switching and Transport Termination Optional Features and BSEs (Cont'd)

6.4.1 Common Switching Optional Features and BSEs Where Available (Cont'd)

(AI) Three-Way Calling (BSE)

This option permits a customer who has established a call using a Lineside BSA to establish a call to a third party. The customer may talk privately with the third party or may add the third party to the call to establish a three way conference call. The customer may also disconnect the third party to reestablish the original two party connection. Once the three-way conference call has been established, if the customer disconnects, the call will be terminated. The option is available with Lineside BSA.

(AJ) 950 on FGD Optional Feature

Feature Group D (FGD) Access Service, as set forth in 6.2.4 preceding, may be ordered to route calls from a designated 950-XXXX access code to FGD access service. When a customer has FGD access service and does not have Feature Group B access service from a particular end office, 950 on FGD may be ordered to activate a customer's designated 950-XXXX access code in that end office. This will allow the Company to direct those designated 950-XXXX calls dialed by the customer's end users to the customer's FGD access service.

When a customer has both FGB and FGD access service and orders 950 on FGD in a particular end office, the Telephone Company will direct those designated 950-XXXX calls dialed by the customer's end users to the customer's FGD access service at that end office.

In both methods, the customer must be prepared to handle normally dialed FGD calls, as well as calls dialed with the designated 950-XXXX access code which requires the customer to receive additional address signaling. Such calls will be rated as FGD.

950 on FGD will be provided from Telephone Company end offices and tandems, where technically feasible. 950 on FGD is only available to customers utilizing a four digit CIC. The customer must specify the end office where 950 on FGD is to be activated to allow calls from a designated 950-XXXX access code to be routed over FGD access service. The customer is precluded from having originating 950 on FGD and originating FGB in the same end office utilizing the same 950-XXXX CIC.

6. Switched Access Service (Cont'd)

6.4 Common Switching and Transport Termination Optional Features and BSEs (Cont'd)

6.4.1 Common Switching Optional Features and BSEs Where Available (Cont'd)

(AK) Flexible Automatic Number Identification (BSE)/Optional Feature

Flexible ANI is a network enhancement to the Local Switching Optional Feature offering of Automatic Numbering Identification (ANI). The enhancement is a software based activation that will provide new and future information indicator (ii) digits activated through switched software program updates.

Flexible Automatic Number Identification enhances the existing Automatic Number Identification (ANI) BSE and Charge Number BSE by allowing Trunkside BSA-101XXXX Option and Feature Group D customers to receive additional information indicator (ii) digits. Flexible Automatic Number Identification will provide additional values for these ii digits over and above the values currently available with the ANI and Charge Number Optional Feature BSEs, and will be used to identify additional call types, i.e., call from WATS lines and private virtual networks. Originating line screening information for the line from which the call originates is also available with this feature.

Customers who have the ANI or Charge Number Optional Feature BSEs, but do not order Flexible Automatic Number Identification, will continue to receive the standard ii digits or originating line information. Flexible Automatic Number Identification ii digits will be assigned by the North American Numbering Plan Administrator.

This service is only available with Feature Group D Trunkside BSA-101XXXX Option served by suitably equipped Telephone Company central offices and will be subject to a charge as specified in section 6.9.2(A)(1) following.

Customers subscribing to the Flexible ANI Optional Feature or BSE will receive all currently available Automatic Number Identification digits within the Telephone Company Central Office. As the technology becomes available, central offices will be upgraded to provide additional digits for all users.

The incremental cost to implement Flexible ANI payphone coding digits will be charged to all Payphone Service Providers on a monthly basis, per line, as set forth in 6.9.2(A)(1) following, to be recovered over 24 months commencing November 1, 1998 and ending October 31, 2000.

A nonrecurring charge will apply as set forth in section 6.9.2(A) following, except when this option is used to identify calls originating from payphone access service lines for per-call compensation.

6. Switched Access Service (Cont'd)

6.4 Common Switching and Transport Termination Optional Features and BSEs (Cont'd)

6.4.1 Common Switching Optional Features and BSEs Where Available (Cont'd)

(AL) Direct Inward Dialing (DID) Service (BSE)

This option permits the central office switch to deliver all or part of the called telephone number to the customer premises at the time the call is established. When number translations have occurred, e.g., Toll Free calls, the number delivered is not the called number, but is the translated number. This option is only available in the originating direction at Telephone Company designated end office switches. This option is arranged for originating calling only and is only available on one-way originating trunks.

This option provides a trunk side termination with line treatment at the first point of switching. This option can be provided with Dial Pulse (DP) address signaling. Dual Tone Multifrequency (DTMF) address signaling is available at the option of the customer when the arrangement is provided at suitably equipped end office switches.

he DP or DTMF address signaling delivers the called telephone number only and no other address signaling is provided by the Telephone Company. Additional address signaling, if required by the customer, must be provided by the customer's end user using inband tone signaling techniques. Such inband tone address signals will not be regenerated by the Telephone Company and will be subject to the ordinary transmission capabilities of the Switched Transport provided.

A seven digit local telephone number assigned by the Telephone Company is provided for access to this option in the originating direction. The seven digit local telephone number will be associated with the selected end office switch and is in the form of NXX-XXXX. A maximum of forty telephone numbers will be provisioned per trunk. Subsequent requests for numbers, up to the maximum of 40 telephone numbers per trunk, added after the establishment of DID Service will be subject to the charge as specified in section 6.8.1(C)(2) following, per request.

The customer has no property right to the telephone number or any other call number designation associated with DID Service furnished by the Telephone Company, and no right to the continuance of service through any particular central office. The Telephone Company reserves the right to change such numbers, or the central office designation associated with such numbers, or both, assigned to the customer, whenever the Telephone Company deems it necessary to do so in the conduct of its business.

6. Switched Access Service (Cont'd)

6.4 Common Switching and Transport Termination Optional Features and BSEs (Cont'd)

6.4.1 Common Switching Optional Features and BSEs Where Available (Cont'd)

(AL) Direct Inward Dialing (DID) Service (BSE) (Cont'd)

If the customer requests a specific seven digit telephone number(s) that is not currently assigned, and the Telephone Company can, with reasonable effort, comply with that request, the requested number(s) will be assigned to the customer.

The number of digits forwarded by the central office switch is determined at the time the service is ordered. Up to seven-digit outpulsing of the called telephone number is provided to the customer's premises.

Due to the absence of central office switch measurement capabilities, assumed minutes of use are applied for Lineside BSAs used in conjunction with the Direct Inward Dialing Service BSE. The monthly originating assumed minutes of use that will be applied per trunk is 2,537.

Terminating service is not provided. Other Lineside BSA features or BSEs, except DID Trunk Queuing BSE, are not available in conjunction with this BSE. This option is available with Lineside BSA only.

(AM) DID Trunk Queuing (BSE)

This option provides queuing for Direct Inward Dialing Service. This feature permits calls to be completed immediately if the Direct Inward Dialing Service has an idle terminal, but when all terminals associated with the Direct Inward Dialing Service are busy, to place the call in a queue to wait its turn to be served. While the call is in the queue, an audible ringing tone is provided. This option is only available from 1AESS Telephone Company end office switches. It is only available with Lineside BSA with the Direct Inward Dialing Service BSE.

(AN) 900 Access Service (Optional Feature)

Originating 900 Access Service is a trunk side switched service that is available to the customer, at their option, via 900 Access Service trunks or trunk groups or in conjunction with Trunkside BSA - MTS/WATS Option, Trunkside BSA-101XXXX Option, Feature Group C, or Feature Group D. 900 Access Service traffic provided in conjunction with Trunkside BSA - MTS/WATS Option, Trunkside BSA-101XXXX Option, FGC, or FGD, is delivered on the same trunk group as non-900 Access Service traffic.

6. Switched Access Service (Cont'd)

6.4 Common Switching and Transport Termination Optional Features and BSEs (Cont'd)

6.4.1 Common Switching Optional Features and BSEs Where Available (Cont'd)

(AN) 900 Access Service (Optional Feature) (Cont'd)

When a 900+NXX+XXXX call is originated by an end user, the Telephone Company will perform six digit screening of the dialed 900 NXX digits to identify the designated 900 customer. The call is routed based on the six digit screening function. If the call originates from an end office not equipped to perform the six digit screening function, the call will be routed to a switch with such capability.

The manner in which 900 Access Service is provided depends on whether the end office from which the call originates has equal access capability and/or the six digit screening capability. Additionally, provision of 900 Access Service is subject to the criteria specified in 6.6.2 following. In equal access end offices with six digit screening capability, served either on a direct or tandem basis, 900 Access Service will be provided via Trunkside BSA-101XXXX Option or Feature Group D trunks and will utilize exchange access signaling.

In equal access end offices lacking the six digit screening capability, the call will be delivered utilizing conventional signaling, via an access tandem, to the customer over 900 Access Service or Trunkside BSA-101XXXX Option or Feature Group D trunks, at the customer's option. Provided the customer has the option of receiving both conventional and exchange access signaling over Trunkside BSA-101XXXX Option and Feature Group D trunks. For other than Trunkside BSA - MTS/WATS Option and FGC, 900 Access Service is provided from non-equal access end offices utilizing conventional signaling, via an equal access tandem, over 900 Access Service trunks or Trunkside BSA-101XXXX Option or Feature Group D trunks, at the customer's option. For Trunkside BSA - MTS/WATS Option and FGC, 900 Access Service can be provided through an existing trunk group or separate Trunkside BSA - MTS/WATS Option or FGC trunk group which handles 900 Access Service. 900 Access Service can be provided from both equal access and non-equal access end offices via a Trunkside BSA-101XXXX Option or Feature Group D trunk group from an access tandem to the customer's premises if the customer can accept, on that trunk group, both exchange access and conventional signaling.

6. Switched Access Service (Cont'd)

6.4 Common Switching and Transport Termination Optional Features and BSEs (Cont'd)

6.4.1 Common Switching Optional Features and BSEs Where Available (Cont'd)

(AN) 900 Access Service (Optional Feature) (Cont'd)

Premium Trunkside BSA-101XXXX Option and Feature Group D rates and charges apply to 900 Access Service calls originated from end offices with equal access capability. Non-premium transitional usage rates apply to 900 Access Service calls originated from end offices lacking equal access capability, except for Trunkside BSA - MTS/WATS Option and Feature Group C customers in which case premium Trunkside BSA - MTS/WATS Option and Feature Group C rates apply. Additionally, nonrecurring charges as specified in Section 6.1.2(B)(5) preceding and Sections 6.9.2(A)(1)(au) and 6.9.9 following also apply.

The following 1+900 Access Service calls will be blocked by the Telephone Company:

- calls dialed with a 101XXXX access code,
- calls from Inmate Service,
- calls originated from coin telephones, and
- calls originated from hotels and motels without call rating systems.

The following 0+900 Access Service calls will be blocked by the Telephone Company:

- calls dialed with a 101XXXX access code,
- calls from Inmate Service,
- calls utilizing the Telephone Company's calling card, and
- calls originated to a customer that has not subscribed to 0+900 Access Service.

If a customer requests 0+900 Access Service, it is the customer's responsibility to ensure that 0+900 calls are provided in conjunction with the customer's credit card billing. Operator assisted calls, such as collect and third party billing, are not provided with 0+900 Access Service.

0+900 Access Service is available only when combined with 1+900 Access Service provided with FGD or Trunkside BSA-101XXXX Option.

6. Switched Access Service (Cont'd)

6.4 Common Switching and Transport Termination Optional Features and BSEs (Cont'd)

6.4.1 Common Switching Optional Features and BSEs Where Available (Cont'd)

(AN) 900 Access Service (Optional Feature) (Cont'd)

Transmission Specifications

900 Access Service trunk groups are provided with either Type B or Type C Transmission Specifications as follows:

- When routed directly from the end office either Type B or Type C is provided.
- When routed to an access tandem only Type B is provided.

Telephone Company switch and customer premises interfaces and design blocking criteria for Trunkside BSA - MTS/WATS Option and Feature Group C apply to 900 Access Service.

Network Controls

The Telephone Company will administer its network in such a manner that the impact of traffic surges due to peaked 900 Access Service traffic on other access service traffic is minimized. The Telephone Company may, at its option, implement network management controls (e.g., call gapping) to ensure acceptable service levels as defined in Section 6.6.1. In order to ensure deployment of adequate protective controls, the customer must provide notice of 900 mass calling events to the Telephone Company's Network Management Center at least forty-eight (48) hours prior to the event. The Telephone Company will work cooperatively with the customer to determine the appropriate type, level and duration of controls.

6. Switched Access Service (Cont'd)

6.4 Common Switching and Transport Termination Optional Features and BSEs (Cont'd)

6.4.1 Common Switching Optional Features and BSEs Where Available (Cont'd)

(AO) Switched Access Signalling Service (SASS)

Switched Access Signalling Service (SASS) is a service available to Tandem Switching Providers (TSPs) that provides the transmission of the Carrier Identification Code (CIC) and Trunk Identification (OZZ) code with Multifrequency (MF) signalling or the Transit Network Selection (TNS) parameter with Signalling System 7 (SS7) signalling. SASS is available only with FGD calls originating from Telephone Company end offices. No traffic, except the Toll Free and/or 500 exceptions noted below, will be directed to the TSP's tandem facility from the Telephone Company's access tandem. SASS is not available with Toll Free/500 Service Access Codes where query functionality does not exist. In these instances, if the TSP requests SASS for Toll Free/500 Service Access Codes, the TSP will be required to order trunks at the hubbing office where the Toll Free/500 query functionality resides.

Calls originating from the Telephone Company's end offices will be routed over dedicated one-way direct-trunked transport to the TSP's Point of Termination. The customer must specify the type of signalling desired: Multifrequency (MF) or Signalling System 7 (SS7). The CIC and OZZ (for MF) or the TNS parameter (for SS7) signalling data included in the call data stream sent to the TSP's tandem will be identical to the CIC and OZZ (for MF) or the TNS parameter (for SS7) signalling data sent to the Telephone Company's access tandem. The signalling data elements will be sent to the TSP on direct-routed traffic.

Separate originating trunks are required from each end office. The customer must comply with all technical requirements specified in Technical References GR-334-CORE, Issue 1; GR-394-CORE, Issue 8; FR-64-CORE, Issue 3; and GR-1083-CORE, Issue 5.

The Telephone Company and the TSP must work cooperatively to ensure no duplication of trunk group numbers exist on TSP facilities to IXCs and Telephone Company facilities to IXCs. This will permit the Telephone Company to accurately identify tandem-routed traffic from Telephone Company end offices to the TSP.

6. Switched Access Service (Cont'd)

6.4 Common Switching and Transport Termination Optional Features and BSEs (Cont'd)

6.4.1 Common Switching Optional Features and BSEs Where Available (Cont'd)

(AO) Switched Access Signalling Service (SASS) (Cont'd)

Traffic may overflow from the TSP's facilities to the Telephone Company's facilities and from the IXC's direct-trunked transport facilities to the TSP's facilities. All overflowing traffic will originate in the end office. In the originating direction, an IXC served by a TSP must have an established presence in the Telephone Company's access tandem or have Telephone Company direct trunks in order for the Telephone Company to accept its overflow traffic. In addition, no overflowing traffic will be directed to the TSP's tandem facility from the Telephone Company's access tandem.

If a Tandem Switching Provider (TSP) elects to discontinue the Switched Access Signalling Service option from end offices after the implementation of SASS, the TSP must contact, in writing, all IXCs who have selected the TSP as their tandem or facility provider to route and deliver FGD access calls to inform them that the service is being discontinued and that the IXCs should select a new tandem-transport provider. The TSP must provide written notification to the Telephone Company that this activity has taken place.

The TSP must have separate trunks to the Telephone Company's tandem or end office if the TSP chooses to provide Terminating FGD Traffic.

If a TSP is designated as the customer of record for terminating traffic, no billing tapes are required. However, TSPs must provide terminating usage recording information to the Telephone Company if the TSP's IXC customers are designated as the customers of record for billing purposes. The TSP must provide daily transmission of the Automatic Message Accounting ("AMA") recording in the standard exchange message record format for all terminating usage that will be billed directly to their IXC customers. The Telephone Company will work cooperatively with the TSP to establish guidelines for resolving recording discrepancies between the AMA records for TSP facilities and Telephone Company trunks. To ensure consistency between the AMA records of the Telephone Company and the TSP, the TSP must adhere to the Telephone Company's FGD usage measurement guidelines set forth in Section 6.8.8(D) following.

A TSP ordering service on behalf of an IXC must provide the Telephone Company a Letter of Authorization (LOA) from the IXC indicating that the customer has agreed to allow the TSP to order from the Telephone Company on their behalf. If the IXC wishes to move their traffic to a TSP's access tandem, the TSP must provide the Telephone Company with a written Letter of Authorization.

6. Switched Access Service (Cont'd)

6.4 Common Switching and Transport Termination Optional Features and BSEs (Cont'd)

6.4.2 Transport Termination Optional Features

(A) Carrier Identification Parameter (CIP)

Carrier Identification Parameter (CIP) is an optional feature that transmits Carrier Identification Code (CIC) information to customers on originating switched access. CIP is available from Telephone Company selected end office and tandem switches in connection with originating Trunkside BSA 101XXXX Option and FGD when out of band signaling is specified. When CIP is provided, the switch will transmit the 4 digit CIC of the presubscribed line or the CIC selected when the end user places a call using 101XXXX dialing. The specific protocol for CIP is contained in Telcordia Document GR-905-CORE, Issue 1, March 1995. The interval for the customer's CIP order will be negotiated by the Telephone Company in cooperation with the customer.

(B) Rotary Dial Station Signaling (Optional Feature)

This option provides for the transmission of called party address signaling from rotary dial stations to the customer's premises for originating calls. This option is provided in the form of a specific type of Transport Termination. It is available with Trunkside BSA - 950 Option and Feature Group B, only on a direct trunked basis.

(C) Operator Trunk - Coin, Non-Coin, or Combined Coin and Non-Coin (Optional Feature)

This option may be ordered to provide coin, non-coin, or combined coin and non-coin operation. It is available with Trunkside BSA - MTS/WATS Option, Trunkside BSA-101XXXX Option, and Feature Group C and D and is provided in electronic end offices and other Telephone Company end offices where equipment is available. It is provided as a trunk type of Transport Termination.

Coin:
This arrangement provides for initial coin return control and routing of 0+, 0-, 1+, 01+ or 011+ prefixed originating coin calls requiring operator assistance to the customer's premises. Because operator assisted coin calling traffic is routed over a trunk group dedicated to operator assisted calls, this arrangement is only provided in association with the Service Class Routing option.

The operator assistance coin calling arrangement is also normally ordered by the customer in conjunction with the ANI optional feature, since the preponderance of trunk groups equipped with this arrangement will be terminated in the customer's TSPS systems, rather than in the customer's manual cord boards.

6. Switched Access Service (Cont'd)

6.4 Common Switching and Transport Termination Optional Features and BSEs (Cont'd)

6.4.2 Transport Termination Optional Features (Cont'd)

(C) Operator Trunk - Coin, Non-Coin, or Combined Coin and Non-Coin (Optional Feature) (Cont'd)

Non-Coin:
This arrangement provides for the routing of 0+, 0-, 00-, 1+, 01+ or 011+ prefixed originating non-coin calls requiring operator assistance to the customer's premises. Because operator assisted non-coin calling traffic is routed over a trunk group dedicated to operator assisted calls, this arrangement is only provided in association with the Service Class Routing option.

The operator assistance non-coin calling arrangement is also normally ordered by the customer in conjunction with the ANI optional feature, since the preponderance of trunk groups equipped with this arrangement will be terminated in the customer's TSPS systems, rather than in the customer's manual cord boards. When so equipped, the ANI feature provides for the forwarding of information digits which identify that the call has originated from a hotel or motel, and whether room number identification is required, or that special screening is required, e.g., for coinless public stations, dormitory or inmate stations, or other screening arrangements agreed to between the customer and the Telephone Company.

Combined Coin and Non-Coin:
This arrangement provides for initial coin return control and routing of 0+, 0-, 1+, 01+, or 011+ prefixed originating operator assisted coin and non-coin calls requiring operator assistance to the customer's premises. Because operator assisted coin and non-coin calling traffic is routed over a trunk group dedicated to operator assisted calls, this arrangement is only provided in association with the Service Class Routing option.

This arrangement is normally ordered by the customer in conjunction with the ANI optional feature, since the preponderance of trunk groups equipped with this arrangement will be terminated in the customer's operator services systems, rather than in the customer's manual card boards. When so equipped, the ANI optional feature provides for the forwarding of information digits which identify that the call has originated from a hotel or motel, and whether room number identification is required, or that special screening is required, e.g., for coinless public stations, dormitory or inmate stations, or other screening arrangements agreed to between the customer and the Telephone Company.

(D) Operator Trunk - Full Feature (Optional Feature)

This option provides the initial coin return control function to the customer's operator. It is available with Trunkside BSA-101XXXX Option and Feature Group D and is provided as a trunk type for Transport Termination.

This option is not available in combination with out of band signaling.

6. Switched Access Service (Cont'd)

6.4 Common Switching and Transport Termination Optional Features and BSEs (Cont'd)

6.4.3 Switched Transport Optional Features

(A) Common Channel Signaling Access Service (Optional Feature)

Common Channel Signaling Access Service (CCSAS) allows the customer to exchange signaling information for Trunkside BSA-101XXXX and FGD call set-up or Billing Validation Service over a communications path which is separate from the message path. This option is provided with Trunkside BSA-101XXXX Option and FGD with out of band signaling, and Billing Validation Service. This service includes a dedicated 56 kbps out of band signaling connection between the customer's SPOI and the Telephone Company's STP and an STP port at the Telephone Company's STP.

CCSAS is provisioned for two-way transmission of out of band signaling information.

Each CCSA Signaling Connection provides for two-way digital transmission at a speed of 56 kbps. The connection to the Telephone Company STP pair can be made from either the customer's Signaling Point (SP) which requires a minimum of two 56 kbps circuits or from the customer's STP pair which requires a minimum of four 56 kbps circuits. The STP locations are set forth in the NATIONAL EXCHANGE CARRIER ASSOCIATION, INC. TARIFF F.C.C. NO. 4. Where multiple STP pairs are deployed in a LATA, Telephone Company end offices or tandems are interconnected to only one STP pair. The customer must route terminating traffic to the STP pair that serves the end office or tandem switch where the call is terminated.

Customers ordering CCSAS are subject to the requirements specified in 2.3.9 and 2.3.10 preceding.

When CCSAS is ordered, network compatibility and other operational tests will be performed cooperatively by the Telephone Company and the customer at locations, dates, and times as specified by the Telephone Company in consultation with the customer. These tests are as specified in Technical Reference GR-905-CORE, Issue 11. When 64CCC and/or ATP is ordered, the SS7 interfaces as specified in Technical Reference GR-905-CORE, Issue 11, will also be tested. Successful completion of the appropriate tests is necessary to receive CCSAS. To protect the security of the network, certain of the information provided, i.e., point codes, by the Telephone Company to the customer will be subject to a non-disclosure agreement.

6. Switched Access Service (Cont'd)

6.4 Common Switching and Transport Termination Optional Features and BSEs (Cont'd)

6.4.3 Switched Transport Optional Features (Cont'd)

(A) Common Channel Signaling Access Service (Optional Feature) (Cont'd)

At the customer's request, CCSAS will be modified to accept SS7 signaling messages and protocol specified in Technical Reference GR-905-CORE, Issue 11, when Trunkside BSA-101XXXX Option and FGD with out of band signaling is provided in accordance with 6.1.2(A)(7)(e) and successful completion of testing in accordance with Technical Reference GR-905-CORE, Issue 11, is required.

CCSAS is subject to the rates and charges as specified in 6.8.1(C)(2), 6.9.1(G) 6.9.1(L), and 6.9.2(A) following. A monthly recurring distance sensitive STP Mileage charge as specified in 6.9.1(L) following will be assessed on a per dedicated 56 kbps out of band signaling connection basis to transport signaling information between the customer's SPOI and the Telephone Company's STP. A monthly recurring STP Port charge as specified in 6.9.2(A) following, will be assessed on a per port basis for the customer's dedicated port at the Telephone Company's STP. A nonrecurring installation charge as specified in 6.9.1(G) following will be assessed per 56 kbps dedicated out of band signaling connection. Information concerning incidental interLATA service is set forth in section 20 following.

(B) Billing Validation Service (Optional Feature)

Billing Validation Service (BVS) provides the customer the ability to query the billing validation data in the Telephone Company's LIDB SCP containing Telephone Company calling card numbers, Telephone Company numbers with collect or bill to third party billing restrictions and public and semi-public telephone numbers. Based upon the received query information the LIDB will respond with a SS7 formatted confirmation of validity or denial for the requested billing option. Access to the Telephone Company's LIDB provides customers with potential toll fraud detection by validating calling card and collect or third party billing restrictions and performing public telephone checks.

LIDB queries are transported, via CCSAS, from a customer's Signaling Point of Interface (SPOI) to the Telephone Company Signal Transfer Point (STP) located in the LATA where the LIDB Signaling Control Point (SCP) is located.

6. Switched Access Service (Cont'd)

6.4 Common Switching and Transport Termination Optional Features and BSEs (Cont'd)

6.4.3 Switched Transport Optional Features (Cont'd)

(B) Billing Validation Service (Optional Feature) (Cont'd)

BVS is designed to transport LIDB queries in an out of band format that is in accordance with the technical and performance requirements as defined in Technical Reference GR-954-CORE, Issue 4.

BVS requires the establishment of a signaling connection between the customer's SPOI and the Telephone Company's STP. Customers must establish out of band signaling connections, as specified in 6.1.2(A)(7)(e) preceding, between its SPOI and the Telephone Company STP in the LATA where the LIDB SCP is located. Should a customer subscribe to both FGD with out of band signaling and BVS in the same LATA where the LIDB SCP is located, signaling for both services must travel over the same out of band signaling connection. The technical interface requirements as defined in Technical Reference GR-905-CORE, Issue 11 apply to out of band signaling connections used for BVS.

Customers ordering BVS are subject to the requirements specified in 2.3.9 and 2.3.10 preceding.

The Telephone Company's LIDB will contain a record for every working line number and Billed Number Group served by the Telephone Company. Other exchange carriers who may store their data in the Telephone Company LIDB are requested to provide this data as well.

The Telephone Company will update the LIDB information; e.g., add, delete, and modify customer accounts as customers move, become delinquent on their account, or order new service, on a daily basis. The updates do not interrupt normal processing of queries.

The Telephone Company has procedures in place to deactivate billing validation data in the event that it is being used fraudulently. Calling cards identified or suspected of being fraudulently used will be updated 7 days a week, 24 hours a day.

6. Switched Access Service (Cont'd)

6.4 Common Switching and Transport Termination Optional Features and BSEs (Cont'd)

6.4.3 Switched Transport Optional Features (Cont'd)

(B) Billing Validation Service (Optional Feature) (Cont'd)

The Telephone Company has established a regional Fraud Center operating 24 hours a day, 7 days a week, to monitor LIDB query thresholds, analyze and investigate potential fraudulent calling, receive interexchange carrier fraud alerts, and act as a single point of contact for LIDB accessors regarding suspected fraud activity. The Center has the ability to immediately deactivate billing validation data in the event it is being used fraudulently.

End user information, pertinent to the investigation, may be shared with LIDB Validation Service customers when validation queries for the specific customer reaches the Telephone Company established fraud threshold level. This fraud threshold level will be applied uniformly to most customers, however, higher threshold levels may be established for certain customers, upon their request (i.e., customers having excessive call volumes resulting in excessive queries to LIDB).

When BVS is ordered, network compatibility and other operational tests will be performed cooperatively by the Telephone Company and the customer at locations, dates, and times as specified by the Telephone Company in consultation with the customer. These tests are as specified Technical Reference GR-905-CORE, Issue 11, and successful completion is necessary to receive BVS. To protect the security of the network, certain of the information provided, i.e., point codes, by the Telephone Company to the customer will be subject to a non-disclosure agreement.

The Telephone Company will administer its LIDB to insure the provision of acceptable service levels to all customers of the Telephone Company's BVS. During periods of BVS system congestion, an automatic call gapping procedure will be utilized to control such congestion. The automatic call gapping procedure will tell the switch the gap (how long the switch should wait before sending another query) and the duration (how long the switch should continue to perform gapping). For example, during an overload condition, the automatic call gapping procedure will tell the LIDB when to begin to drop one out of three of the queries received. This call gapping procedure will be applied uniformly to all users of the Telephone Company's BVS.

6. Switched Access Service (Cont'd)

6.4 Common Switching and Transport Termination Optional Features and BSEs (Cont'd)

6.4.3 Switched Transport Optional Features (Cont'd)

(B) Billing Validation Service (Optional Feature) (Cont'd)

The Telephone Company maintains the right to invoke manual intervention of the automatic call gapping procedure to preserve the integrity of the network.

BVS is designed for one hundred percent (100%) availability and has a mated configuration to ensure such availability. The LIDB validation system is capable of processing up to 150 queries per second. The roundtrip response time for a query should not exceed two seconds for 99 percent of all queries.

BVS is subject to the rates and charges as specified in 6.9.1(M) following. A recurring Query Transport charge will be assessed on a per query basis to transport the LIDB query between the Telephone Company's STP and the LIDB SCP. A recurring Query Validation charge will be assessed on a per query basis for processing the LIDB query. A nonrecurring Service Establishment charge will be assessed on an originating point code basis for establishing or changing a customer's BVS.

(C) Toll Free Data Base Access Service

Toll Free Data Base Access Service is an originating only trunk side service. When a Toll Free+NXX+XXXX call is originated by an end user, the Telephone Company will perform customer identification based on screening of the full ten-digits of the Toll Free number to determine the customer location to which the call is to be routed. "Toll Free" is considered to mean any access service which utilizes any of the following NPA's: 800, 888, 877, 866, 855, 844, 833, and 822 as they become available to the industry.

Customers have the option of specifying an area of service from which to receive calls. A specific area of service can be a LATA, state, region, USA, or USA/Canada/Caribbean.

Toll Free Data Base Access Service calls may be delivered to the customer directly from an end office only when the end office is equipped with Toll Free Data Base query functionality, i.e., ability to query the Toll Free Data Base to perform ten-digit customer identification. When the end office does not have Toll Free Data Base query functionality, the query is delivered to the customer from the access tandem (all access tandems have Toll Free Data Base query functionality).

6. Switched Access Service (Cont'd)

6.4 Common Switching and Transport Termination Optional Features and BSEs (Cont'd)

6.4.3 Switched Transport Optional Features (Cont'd)

(C) Toll Free Data Base Access Service (Cont'd)

Feature Group D rates and charges apply to Toll Free Data Base Access Service calls originated from end offices with equal access capability. In addition to Feature Group D usage charges, a basic query charge as specified in 6.1.2(A)(8) preceding and 6.9.1(N) following applies to each Toll Free Data Base Access Service call delivered to the customer. A basic query charge consists of customer identification [i.e., Carrier Identification Number (CIC)], delivery of the dialed Toll Free ten-digit number, ANI, and the allowable area of service, designated by the customer, from which Toll Free calls can be received.

The Federal Communications Commission ("FCC") has concluded that hoarding, defined as the acquisition of more toll free numbers than one intends to use for the provision of toll free service, as well as the sale of a toll free number by a private entity for a fee, is contrary to the public interest in the conservation of the scarce toll free number resource and contrary to the FCC's responsibility to promote the orderly use and allocation of toll free numbers.

Vertical Feature Package (VFP)

This feature package, available only with Toll Free Data Base Access Service, provides feature functionality in addition to the basic query. The feature package may include various destination options such as POTS Translation, carrier selection, time of day routing, day of week routing, specific date routing, geographic routing, routing based on percent of allocation, and emergency routing profiles.

Transmission Specifications

Toll Free Data Base Access Service is provided with either Type A, Type B or Type C Transmission Specifications as follows:

- When routed directly to the end office either Type B or C is provided.

- When routed to an access tandem only Type A is provided.

- Type A is provided on the transmission path from the access tandem to the end office.

6. Switched Access Service (Cont'd)

6.4 Common Switching and Transport Termination Optional Features and BSEs (Cont'd)

6.4.3 Switched Transport Optional Features (Cont'd)

(C) Toll Free Data Base Access Service (Cont'd)

Type C Transmission Specifications are provided with Interface Group 1. Type A and Type B Transmission Specifications are provided with Interface Groups 2 through 10.

For Toll Free Data Base Access Service traffic originating from end offices with Data Base query functionality, all normal Feature Group D parameters apply.

Toll Free Data Base Access Service traffic originating from all other end offices, Type A Transmission Specifications are provided for the facility between the access tandem and the customer's facilities.

(D) 500 Access Service

500 Access Service is a service designed to meet the needs of 500 Service Providers of Personal Communications Service (PCS) who have been assigned a 500-NXX code by the North American Numbering Plan Administrator.

500 Access Service is an originating only trunk side service. When a 500-NXX-XXXX call is originated by an end user, the Telephone Company will perform customer identification based on six-digit 500-NXX screening of the 500 number to determine the customer location to which the call is to be routed.

Customers have the option of having the Telephone Company perform additional data base processing for calls to their 500-NXX code in order to translate the dialed 500-NXX-XXXX number to a geographic NANP number (i.e. POTS) for routing of the call. This option is not available for customers that have requested 0+500-NXX-XXXX originated calls to be completed by originating end users. A switched Access rearrangement charged as specified in 6.8.1(C)(2) will apply for each subsequent order for this option.

Certain end office switches are not equipped with 500 NXX query functionality. In these instances 0+500 calls will be routed to a Telephone Company operator switch which will translate the 0+500 NXX number and route the call. Customers will be required to provide trunks at the operator switch. 1+500 calls will be routed to a Telephone Company hubbing office equipped with 500 NXX functionality.

6. Switched Access Service (Cont'd)

6.4 Common Switching and Transport Termination Optional Features and BSEs (Cont'd)

6.4.3 Switched Transport Optional Features (Cont'd)

(D) 500 Access Service (Cont'd)

Feature Group D rates and charges apply to 500 Access Service calls originated from end offices with equal access capability. The query charge as specified in 6.9.1 following applies to each 500 Access Service call delivered to the customer. A query charge consists of customer identification [i.e., Carrier Identification Code (CIC) or Trunk Group], delivery of the dialed 500 number or POTS translation of the dialed 500 number, ANI, from the allowable area of service.

6.5 Transmission Specifications

Each Switched Access Service transmission path is provided with standard transmission specifications. There are three different standard specifications (Types A, B and C). The standard for a particular transmission path is dependent on the Switched Access Service, the Interface Group and whether the service is directly routed or via an access tandem. The available transmission specifications are set forth in 6.5.1 following. Data Transmission Parameters are also provided with each Switched Access Service transmission path. The Telephone Company will, upon notification by the customer that the data parameters set forth in 6.5.2(A) or 6.5.2(B) are not being met, conduct tests independently or in cooperation with the customer, and take any necessary action to insure that the data parameters are met.

The Telephone Company will maintain existing transmission specifications on functioning service configurations installed prior to the effective date of this tariff except that service configurations having performance specifications exceeding the standards listed in this provision will be maintained at performance levels specified in this tariff.

The transmission specifications contained in this Section are immediate action limits. Acceptance limits are set forth in Technical Reference GR-334-CORE, Issue 1. This Technical Reference also provides the basis for determining Switched Access service maintenance limits Transmission specifications for out of band signaling connections are set forth in Technical Reference GR-905-CORE, Issue 11.

Transmission specifications for 64 Clear Channel Capability, when provisioned with Trunkside BSA-101XXXX Option or FGD with out of band signaling, are set forth in Technical Reference GR-334-CORE, Issue 1.

6. Switched Access Service (Cont'd)

6.5 Transmission Specifications (Cont'd)

6.5.1 Standard Transmission Specifications

Following are descriptions of the three Standard Transmission Specifications available with Switched Access Services. The specific applications in terms of the Switched Access Services and Interface Groups with which the Feature Group and BSA Standard Transmission Specifications are provided are set forth in 6.2.1(C), 6.2.2(C), 6.2.3(C) and 6.2.4(C) preceding.

(A) Type A Transmission Specifications

Type A Transmission Specifications are provided with the following parameters:

(1) Loss Deviation

The maximum Loss Deviation of the 1004 Hz loss relative to the Expected Measured Loss (EML) is + 2.0 dB

(2) Attenuation Distortion

The maximum Attenuation Distortion in the 404 to 2804 Hz frequency band relative to the loss at 1004 Hz is -1.0 dB to +3.0 dB.

(3) C-Message Noise

The maximum C-Message Noise for the transmission path at the route miles listed is less than or equal to:

Route Miles	C-Message Noise
less than 50	32 dBrnCO
51 to 100	34 dBrnCO
101 to 200	37 dBrnCO
201 to 400	40 dBrnCO
401 to 1000	42 dBrnCO

6. Switched Access Service (Cont'd)

6.5 Transmission Specifications (Cont'd)

6.5.1 Standard Transmission Specifications (Cont'd)

(A) Type A Transmission Specifications (Cont'd)

(4) C-Notch Noise

The maximum C-Notch Noise, utilizing a -16 dBmO holding tone, is less than or equal to 45 dBrnCO.

(5) Echo Control

Echo Control, identified as Equal Level Echo Path Loss and expressed as Echo Return Loss (ERL) and Singing Return Loss (SRL), is dependent on the routing, i.e., whether the service is routed directly from the customer's Point of Termination (POT) to the end office or via an access tandem. They are equal to or greater than the following:

	Echo Return Loss	Singing Return Loss
POT to Access Tandem	21 dB	14 dB
POT to End Office		
- Direct	N/A	N/A
- Via Access Tandem	16 dB	11 dB

6. Switched Access Service (Cont'd)

6.5 Transmission Specifications (Cont'd)

6.5.1 Standard Transmission Specifications (Cont'd)

(B) Type B Transmission Specifications

Type B Transmission Specifications are provided with the following parameters:

(1) Loss Deviation

The maximum deviation of the 1004 Hz loss relative to the Expected Measured Loss (EML) is + 2.5 dB.

(2) Attenuation Distortion

The maximum Attenuation Distortion in the 404 to 2804 Hz frequency band relative to loss at 1004 Hz is -2.0 dB to +4.0 dB.

(3) C-Message Noise

The maximum C-Message Noise for the transmission path at the route miles listed is less than or equal to:

	C-Message Noise*	
Route Miles	Type B1	Type B2
less than 50	32 dBrnCO	35 dBrnCO
51 to 100	33 dBrnCO	37 dBrnCO
101 to 200	35 dBrnCO	40 dBrnCO
201 to 400	37 dBrnCO	43 dBrnCO
401 to 1000	39 dBrnCO	45 dBrnCO

(4) C-Notch Noise

The maximum C-Notch Noise, utilizing a -16 dBm0 holding tone is less than or equal to 47 dBrnCO.

* For Trunkside BSA - MTS/WATS Option, Trunkside BSA-101XXXX Option and Feature Groups C and D only Type B2 will be provided. For Lineside BSA, Trunkside BSA - 950 Option and Feature Groups A and B, Type B1 or B2 will be provided set as forth in Technical Reference GR-334-CORE, Issue 1.

6. Switched Access Service (Cont'd)

6.5 Transmission Specifications (Cont'd)

6.5.1 Standard Transmission Specifications (Cont'd)

(B) Type B Transmission Specifications (Cont'd)

(5) Echo Control

Echo Control, identified as Impedance Balance for Lineside BSA, Trunkside BSA - 950 Option and FGA and FGB and Equal Level Echo Path Loss for Trunkside BSA - MTS/WATS Option FGC and Trunkside BSA-101XXXX Option and FGD, and expressed as Echo Return Loss (ERL) and Singing Return Loss (SRL), is dependent on the routing, i.e., whether the service is routed directly from the customer Point of Termination (POT) to the end office or via an access tandem. The ERL and SRL also differ by Switched Access Services of termination, and type of transmission path. They are greater than or equal to the following:

	Echo Return Loss	Singing Return Loss
POT to Access Tandem		
- Terminated in 4-Wire trunk	21 dB	14 dB
- Terminated in 2-Wire trunk	16 dB	11 dB
POT to End Office		
- Direct	16 dB	11 dB
- Via Access Tandem		
- For Trunkside BSA - 950 Option and FGB access	8 dB	4 dB
- For Trunkside BSA - MTS/WATS Option and FGB access (Effective 4-Wire transmission path at end office)	16 dB	11 dB
- For Trunkside BSA - MTS/WATS Option and FGC access (Effective 2-Wire transmission path at end office)	13 dB	6 dB

6. Switched Access Service (Cont'd)

6.5 Transmission Specifications (Cont'd)

6.5.1 Standard Transmission Specifications (Cont'd)

(C) Type C Transmission Specifications

Type C Transmission Specifications are provided with the following parameters:

(1) Loss Deviation

The maximum Loss Deviation of the 1004 Hz loss relative to the Expected Measured Loss (EML) is + 3.0 dB.

(2) Attenuation Distortion

The maximum Attenuation Distortion in the 404 to 2804 Hz frequency band relative to loss at 1004 Hz is -2.0 dB to +5.5 dB.

(3) C-Message Noise

The maximum C-Message Noise for the transmission path at the route miles listed is less than or equal to:

	C-Message Noise*	
Route Miles	Type C1	Type C2
less than 50	32 dBrnCO	38 dBrnCO
51 to 100	33 dBrnCO	39 dBrnCO
101 to 200	35 dBrnCO	41 dBrnCO
201 to 400	37 dBrnCO	43 dBrnCO
401 to 1000	39 dBrnCO	45 dBrnCO

* For Trunkside BSA - MTS/WATS Option, Trunkside BSA-101XXXX Option, and Feature Group C and D only Type C2 will be provided. For Lineside BSA, Trunkside BSA - 950 Option, and Feature Groups A and B, Type C1 or C2 will be provided as set forth in Technical Reference GR-334-CORE, Issue 1.

6. Switched Access Service (Cont'd)

6.5 Transmission Specifications (Cont'd)

6.5.1 Standard Transmission Specifications (Cont'd)

(C) Type C Transmission Specifications (Cont'd)

(4) C-Notch Noise

The maximum C-Notch Noise, utilizing a 16 dBmO holding tone is less than or equal to 47 dBrnCO.

(5) Echo Control

Echo Control, identified as Return Loss and expressed as Echo Return Loss and Singing Return Loss is equal to or greater than the following:

	Echo Return Loss	Singing Return Loss
POT to End Office - Direct	13 dB	6 dB

6.5.2 Data Transmission Parameters

Two types of Data Transmission Parameters, i.e., Type DA and Type DB, are provided for the Switched Access Services. The specific applications in terms of the BSAs with which they are provided are set forth in 6.3.1, 6.3.2, 6.3.2(A), 6.3.2(B), and 6.3.2(C) preceding. Following are descriptions of each.

(A) Data Transmission Parameters Type DA

(1) Signal to C-Notched Noise Ratio

The Signal to C-Notched Noise Ratio is equal to or greater than 33 dB.

6. Switched Access Service (Cont'd)

6.5 Transmission Specifications (Cont'd)

6.5.2 Data Transmission Parameters (Cont'd)

(A) Data Transmission Parameters Type DA (Cont'd)

(2) Envelope Delay Distortion

The maximum Envelope Delay Distortion for the frequency bands and route miles specified is:

	604 to 2804 Hz
less than 50 route miles	500 microseconds
equal to or greater than 50 route miles	900 microseconds

	1004 to 2404 Hz
less than 50 route miles	200 microseconds
equal to or greater than 50 route miles	400 microseconds

(3) Impulse Noise Counts

The Impulse Noise Counts exceeding a 65 dBrnCO threshold in 15 minutes is no more than 15 counts.

(4) Intermodulation Distortion

The Second Order (R2) and Third Order (R3) Intermodulation Distortion Products are equal to or greater than:

Second Order (R2)	33 dB
Third Order (R3)	37 dB

(5) Phase Jitter

The Phase Jitter over the 4-300 Hz frequency band is less than or equal to 5° peak-to-peak.

(6) Frequency Shift

The maximum Frequency Shift does not exceed -2 to +2 Hz.

6. Switched Access Service (Cont'd)

6.5 Transmission Specifications (Cont'd)

6.5.2 Data Transmission Parameters (Cont'd)

(B) Data Transmission Parameters Type DB

(1) Signal to C-Notoned Noise Ratio

The signal to C-Notoned Noise Ratio is equal to or greater than 30 dB.

(2) Envelope Delay Distortion

The maximum Envelope Delay Distortion for the frequency bands and route miles specified is:

	604 to 2804 Hz
less than 50 route miles	800 microseconds
equal to or greater than 50 route miles	1000 microseconds

	1004 to 2404 Hz
less than 50 route miles	320 microseconds
equal to or greater than 50 route miles	500 microseconds

(3) Impulse Noise Counts

The Impulse Noise Counts exceeding a 67 dBrnCO threshold in 15 minutes is no more than 15 counts.

(4) Intermodulation Distortion

The Second Order (R2) and Third Order (R3) Intermodulation Distortion Products are equal to or greater than:

Second Order (R2)	31 dB
Third Order (R3)	34 dB

(5) Phase Jitter

The Phase Jitter over the 4-300 Hz frequency band is less than or equal to 7° peak-to-peak.

(6) Frequency Shift

The maximum Frequency Shift does not exceed -2 to +2 Hz.

6. Switched Access Service (Cont'd)

6.6 Obligations of the Telephone Company

In addition to the obligations of the Telephone Company set forth in 2. preceding, the Telephone Company has certain other obligations pertaining only to the provision of Switched Access Service. These obligations are as follows:

6.6.1 Network Management

The Telephone Company will administer its network to insure the provision of acceptable service levels to all telecommunications users of the Telephone Company's network services. Generally, service levels are considered acceptable only when both end users and customers are able to establish connections with little or no delay encountered within the Telephone Company network. The Telephone Company maintains the right to apply protective controls, i.e., those actions, such as call gapping, which selectively cancel the completion of traffic, over any traffic carried over its network, including that associated with a customer's Switched Access Service. Generally, such protective measures would only be taken as a result of occurrences such as failure or overload of Telephone Company or customer facilities, natural disasters, mass calling or national security demands. In the event that the protective controls applied by the Telephone Company result in the complete loss of service by the customer, the customer will be granted a Credit Allowance for Service Interruption as set forth in Section 2.7.1(A) preceding.

6.6.2 Design and Traffic Routing of Switched Access Service

For Switched Access Services, the customer and the Telephone Company will apply a capacity threshold test to determine the design and routing of the Switched Access Service. When the amount of estimated traffic to and/or from an end office is equal to or less than 750 busy hour minutes of use, the customer may specify whether the traffic is to be routed directly between the end office and customer's premises or whether all or a portion of the traffic should be routed via an access tandem. When the amount of estimated traffic to and/or from an end office exceeds 750 busy hour minutes of use, the Telephone Company will work cooperatively with the customer to design and determine the routing and directionality using either direct final trunks or a combination of direct high usage trunks between the end office and the customers premises, with alternate route trunks via the access tandem.

The Telephone Company will determine whether trunk side access will be provided through the use of two-wire or four-wire trunk terminating equipment. Selection of facilities and equipment and traffic routing of the service are based on standard engineering methods, available facilities and equipment, and the Telephone Company traffic routing plans.

6. Switched Access Service (Cont'd)

6.6 Obligations of the Telephone Company (Cont'd)

6.6.3 Provision of Service Performance Data

Subject to availability, end-to-end service performance data available to the Telephone Company through its own service evaluation routines, may also be made available to the customer based on previously arranged intervals and format. These data provide information on overall end-to-end call completion and non-completion performance, e.g., customer equipment blockage, failure results and transmission performance. These data do not include service performance data which are provided under other Tariff Sections, e.g., testing service results. If data are to be provided in other than paper format, the charges for such exchange will be determined on an individual case basis.

6.6.4 Trunk Group Measurement Reports

Subject to availability, the Telephone Company will make available trunk group data in the form of usage in CCS, peg count and overflow, to the customer based on previously agreed to intervals.

6.6.5 Determination of Number of Transmission Paths

The following applies to switched access voice transmission paths, and does not apply to signaling connections provided with CCSAS. The number of transmission paths for out of band signaling connections will be determined jointly by the Telephone Company and the Customer.

Customers ordering Switched Access Services specify the number of transmission paths in the order for service. A transmission path is a communication path within the frequency bandwidth of approximately 300 to 3000 Hz or a derived communication path of a frequency bandwidth of approximately 300 Hz to 3000 Hz provided over a high frequency analog facility or a high speed digital facility between a customer's premises and a Telephone Company location.

6.6.6 Determination of Number of End Office Transport Terminations

For analog entry switches, a termination will be provided for each transmission path provided. For digital entry switches, an equivalent termination will be provided for each transmission path provided.

6. Switched Access Service (Cont'd)

6.6 Obligations of the Telephone Company (Cont'd)

6.6.7 Designed Blocking Probability

The Telephone Company will design the facilities for the provision of tandem circuits used for common transport between the access tandem and the end office.

In addition, the Telephone Company will perform routine measurement functions in accordance with Telephone Company blocking objectives to assure that an adequate number of transmission paths are in service. The Telephone Company will recommend that additional trunks be ordered by the customer when required to reduce the measured blocking to the objective.

(A) For FGA and FGB (Lineside BSA and Trunkside BSA - 950 Option) no blocking criteria apply.

(B) The blocking objective for FGB on D, and FGD (Trunkside BSA - MTS/WATS Option) will be no greater than one percent (.01) between the point of termination at the customer's premises and the first point of switching in the Telephone Company's network when traffic is directly routed without an alternate route. For this directly routed traffic, the objective is solely a function of the customer's network design.

(C) The blocking objective for FGD (Trunkside BSA - 10XXX/101XXXX) will be no greater than one percent (.01) between the point of termination at the customer’s premises and the end office switch, whether the traffic is directly routed without an alternate route or routed via an access tandem. For traffic routed via an access tandem, the objective is a combination of the Telephone Company's common transport design capacity and the customer's network design capacity.

6. Switched Access Service (Cont'd)

6.6 Obligations of the Telephone Company (Cont'd)

6.6.7 Designed Blocking Probability (Cont'd)

(D) Standard traffic engineering methods as set forth in Technical Reference SR-TAP-000191, Trunk Traffic Engineering Concepts and Applications, will be used by the Telephone Company to determine the number of trunks required to achieve the blocking objectives in all cases.

The design blocking objective is assumed to have been met if the routine measurements show that the measured blocking does not exceed the thresholds listed in the following tables:

Number of Transmission Paths Per Trunk Group	Measured Blocking Thresholds in the Time Consistent Busy Hour for the Number of Measurements Per Trunk Group			
	15-20 Measurements	11-14 Measurements	7-10 Measurements	3-6 Measurements
2	.070	.080	.090	.140
3	.050	.060	.070	.090
4	.050	.060	.070	.080
5-6	.040	.050	.060	.070
7 or more	.030	.035	.040	.060

(1) For transmission paths carrying first routed traffic between an end office and a customer's premises via an access tandem, the measured blocking thresholds are as follows:

Number of Transmission Paths Per Trunk Group	Measured Blocking Thresholds in the Time Consistent Busy Hour for the Number of Measurements Per Trunk Group			
	15-20 Measurements	11-14 Measurements	7-10 Measurements	3-6 Measurements
2	.045	.055	.060	.095
3	.035	.040	.045	.060
4	.035	.040	.045	.055
5-6	.025	.035	.040	.045
7 or more	.020	.025	.030	.040

6. Switched Access Service (Cont'd)

6.6 Obligations of the Telephone Company (Cont'd)

6.6.8 End User Line and Usage Information Data

(A) General

The Telephone Company will provide to customers, upon request, historical and projected information pertaining to the number of end user lines and latest available average use per line. Such information shall be limited to that information which the Telephone Company uses in the course of performing its normal business operations. Additionally, the Telephone Company will make update information available only on a semi-annual basis.

(B) Information Content and Format

The historical and projected data will be provided on a per end office basis and will consist of the following information:

- Number of residential lines
- Number of business lines
- Average use per line

Unless requested otherwise, the data will be provided in machine-readable format.

(C) Availability of Data

The Telephone Company will provide the data to the requesting customer within 30 days of the receipt of the request. Separate requests are limited to two per end office per year.

(D) The charge to the customer for such data will be developed on an individual case basis and will include only those incremental costs incurred by the Telephone Company in responding to the individual data request. Individual Case Basis (ICB) tariff filings will be made in Section 12, Specialized Service or Arrangements, following. Incremental costs include, but are not limited to, costs associated with the provision of data in a non-standard format as well as costs associated with responding to other individualized treatment requested by the customer.

6. Switched Access Service (Cont'd)

6.6 Obligations of the Telephone Company (Cont'd)

6.6.9 Bill Verification Data

At the customer's request and at no charge, the Telephone Company will provide, within 30 days from receipt of a written request, underlying data used to derive subscriber line ratios as defined in Section 6.8.1 (D)(4) following. In addition to data used to develop subscriber line ratios, additional bill verification data, as is readily available, will also be provided subject to the preceding conditions.

6.6.10 Operator Transfer Service

Upon customer request, the Telephone Company will provide a list identifying Operator Services Access Points for use with Operator Transfer Service as specified in 6.3.2(C)(1) preceding. Additionally, the Telephone Company will define the service areas of designated Operator Services Access Points and will identify the signaling capability of end offices in the service area.

6.7 Obligations of the Customer

In addition to the obligations of the customer set forth in 2. preceding the customer has certain specific obligations pertaining to the use of Switched Access Service. These obligations are as follows:

6.7.1 Report Requirements

Customers are responsible for providing the following reports to the Telephone Company, when applicable.

(A) Jurisdictional Reports

When a customer orders Switched Access Service for both interstate and intrastate use, the customer is responsible for providing reports as set forth in 2.3.10 preceding. Charges will be apportioned in accordance with those reports. The method to be used for determining the interstate charges is set forth in 2.3.11 preceding.

6. Switched Access Service (Cont'd)

6.7 Obligations of the Customer (Cont'd)

6.7.1 Report Requirements (Cont'd)

(B) Code Screening Reports

When a customer orders service class routing, trunk access limitation or call gapping arrangements, it must report the number of trunks and/or the appropriate codes to be instituted in each end office or access tandem switch, for each of the arrangements ordered.

(C) Telecommunications Relay Service (TRS) Provider Reports

When a customer uses Switched Access service to carry tandem routed traffic originated from a TRS Center, in cases where the tandem does not have the capability to measure calls, the Telephone Company will assess applicable access charges to the customer based on reports provided by the TRS provider.

(D) 900 and Interim 500 Access Service NXX Codes

All 900 and Interim 500 NXX Code assignments and administration shall be in accordance with the North American Numbering Plan (NANP).

When ordering 900 and Interim 500 Access Service, NXX Codes to be activated or deactivated must be provided to the Telephone Company in accordance with applicable ordering intervals. Customer assigned codes, for which an order has not been received, will be blocked.

Customers ordering 900 Access Service are required to provide both a field test number and a trouble referral contact number to the Telephone Company coincident with the order for service. The field test number will be utilized by the Telephone Company to place test calls to the Customer's premises. The referral contact number will be utilized by the Telephone Company to refer end user trouble reports to the appropriate customer.

6. Switched Access Service (Cont'd)

6.7 Obligations of the Customer (Cont'd)

6.7.2 Supervisory Signaling

The customer's facilities shall provide the necessary on-hook, off-hook answer and disconnect supervision. For 500 Access Service, Toll Free Data Base Access Service, and 900 Access Service, which originates from end offices other than equal access end offices with the customer identification function, and for Trunkside BSA - 950, the customer shall provide answer off-hook signal upon completion of the outpulsed signaling sequence at his point of presence.

For Trunkside BSA-101XXXX Option, including 500 Access Service, Toll Free Data Base Access Service, and 900 Access Service from equal access end offices with the customer identification function, the customer shall return answer off-hook signal when the called party answers.

6.7.3 Trunk Group Measurements Reports

With the agreement of the customer, trunk group data in the form of usage in CCS, peg count and overflow for its end of all access trunk groups, where technologically feasible, will be made available to the Telephone Company. These data will be used to monitor trunk group utilization and service performance and will be based on previously arranged intervals and format.

6.7.4 Design of Switched Access Services

When a customer orders Trunkside BSA-101XXXX Option Switched Access Service, or trunks associated with 900 Access Service, 500 Access Service, Toll Free Data Base Access Service, it is the customer's responsibility to assure that sufficient access services have been ordered to handle its traffic.

6. Switched Access Service (Cont'd)

6.8 Rate Regulations

This Section contains the specific regulations governing the rates and charges that apply for Switched Access Service.

6.8.1 Description and Application of Rates and Charges

There are three types of rates and charges that apply to Switched Access Service. These are monthly recurring rates, usage rates and nonrecurring charges. These rates and charges are applied differently to the various rate elements as set forth in (D) following.

Certain Switched Transport rates and charges (monthly and non-recurring) will be applied based on Rate Zones or Metropolitan Statistical Areas (MSAs). Rate Zones are defined in Section 2.6 and contained in Section 14.2. In cases where the Channel Mileage crosses Rate Zones (e.g., serving wire center 1 is in Rate Zone 1 and serving wire center 2 is in Rate Zone 2), the higher-rated mileage charge will be applied to the entire channel mileage. Multiplexing rates will be determined by the location of the multiplexing arrangement.

MSAs are defined in Section 2.6 and are listed in Section 14.3. In wire centers within a qualifying MSA, monthly rates and nonrecurring charges for certain Switched Access service rate elements are arranged in price bands. The price band for each serving wire center within a qualifying MSA and the type of Switched Access Services which are subject to price band rating are specified in Section 14.3, following. In cases where Channel Mileage crosses price bands, the charge for the higher numbered price band applies. When channel mileage is between an MSA price band and a Non-qualifying MSA (N-MSA) wire center, the rates and charges for the N-MSA wire center (a rate zone charge or a basic (N-MSA) channel mileage charge) apply.

(A) Monthly Rates

Monthly rates are flat recurring rates that apply each month or fraction thereof that a specific rate element is provided, except for the following. For billing purposes, each month is considered to have 30 days.

Monthly rates for Dedicated SONET Optical Transport Service are billed at Category I or Category II rates in accordance with Section 6.8.25(C)(6)(d)(8) following.

6. Switched Access Service (Cont'd)

6.8 Rate Regulations (Cont'd)

6.8.1 Description and Application of Rates and Charges (Cont'd)

(B) Usage Rates

Usage rates are rates that apply only when a specific rate element is used. These are applied on a per access minute basis. Charges are accumulated over a monthly period.

(C) Nonrecurring Charges

Nonrecurring charges are one time charges that apply for a specific work activity (e.g., installation or change to an existing service). The types of nonrecurring charges that apply for Switched Access Service are: installation of service and service rearrangements.

Certain nonrecurring charges applicable to the installation of access service consist of a "first" and "additional" charge. For each facility, line, or trunk ordered, the first charge applies to the first facility, line, or trunk specified on the order, with the additional charge applied to each additional facility, line, or trunk specified on the same order between same locations.

(1) Installation of Service

Nonrecurring charges apply to each Switched Access Service installed. For Switched Services, the charge is applied per line or trunk.

In addition, nonrecurring charges apply when Common Channel Signaling Access Service is installed for use with Trunkside BSA-101XXXX Option, Feature Group D and/or Billing Validation Service.

6. Switched Access Service (Cont'd)

6.8 Rate Regulations (Cont'd)

6.8.1 Description and Application of Rates and Charges (Cont'd)

(C) Nonrecurring Charges (Cont'd)

(2) Service Rearrangements

Service rearrangements are changes to existing services installed which do not result in either a change in the minimum period requirements as set forth in 5.2.5 preceding or a change in the physical location of the point of termination at a customer's premises or a customer's end user's premises. Changes which result in the establishment of new minimum period obligations are treated as disconnects and starts. Changes in the physical location of the point of termination are treated as moves and described and charged for as set forth in 6.8.7 following.

The charge to the customer for the service rearrangement is dependent on whether the change is administrative only in nature or involves an actual physical change to the service, including the addition of a FGD Carrier identification Code (CIC) to an existing network and other translation-only type work.

- When the physical change involves the addition of FGD CIC(s) to an existing network, a service rearrangement charge would apply per CIC, per sub-tending end office, per access tandem.

- When the physical change involves translation-only type work, a service rearrangement charge would apply at the level of work being performed (such as per trunk, per trunk group, per end office, or per access tandem).

6. Switched Access Service (Cont'd)

6.8 Rate Regulations (Cont'd)

6.8.1 Description and Application of Rates and Charges (Cont'd)

(C) Nonrecurring Charges (Cont'd)

(2) Service Rearrangements (Cont'd)

Administrative changes will be made without charge(s) to the customer. Such changes require the continued provision and billing of the Access Service to the same customer (i.e., same customer remains responsible for all outstanding indebtedness for the Access Service). Administrative changes are as follows:

- Change of customer name, (i.e., the customer of record does not change but rather the customer of record changes its name -- e.g., AT&T-Long Lines to AT&T Communications)
- Change of customer or customer's end user premises address when the change of address is not a result of a physical relocation of equipment,
- Change in billing data (name, address, or contact name or telephone number),
- Change of agency authorization,
- Change of customer circuit identification,
- Change of billing account number,
- Change of customer test line number,
- Change of customer or customer's end user contact name or telephone number, and
- Change of jurisdiction.

All other service rearrangements will be charged for as follows:

- If the change involves the addition of an optional feature or BSE which has a separate nonrecurring charge, that nonrecurring charge will apply.

6. Switched Access Service (Cont'd)

6.8 Rate Regulations (Cont'd)

6.8.1 Description and Application of Rates and Charges (Cont'd)

(C) Nonrecurring Charges (Cont'd)

(2) Service Rearrangements (Cont'd)

A charge as specified following will apply on each transmission path reconfigured from:

- SS7 signaling to MF signaling
- 64CCC to SS7 signaling
- 64CCC to MF signaling

When out of band signaling or 64CCC is ordered, the customer may add Calling Party Number (CPN), Charge Number (CN), Carrier Selection Parameter (CSP), and Access Transport Parameter (ATP) at no additional charge if these features are specified at the time out of band signaling or 64CCC is ordered for existing switched access trunks.

For Dedicated Network Access Link BSAs, the addition of optional features without separate nonrecurring charges, a charge equal to a channel termination rate element first nonrecurring change charge will apply. Only one such charge will apply per service per change.

For all other changes; including the addition of, or modifications to, optional features or BSEs without separate nonrecurring charges, a charge as specified following will apply. When an optional feature or BSES is not required on each transmission path, but rather for an entire transmission path group, an end office or an access tandem switch, only one such charge will apply (i.e., it will not apply per transmission path).

	Nonrecurring Charge
- Per Rearrangement	$50.00

6. Switched Access Service (Cont'd)

6.8 Rate Regulations (Cont'd)

6.8.1 Description and Application of Rates and Charges (Cont'd)

(C) Nonrecurring Charges (Cont'd)

(2) Service Rearrangements (Cont'd)

Rearrangement charges as specified in 6.9 following apply on a per termination basis for the following service rearrangements:

a) rearranging an existing subtending service from one port to another in the same multiplexing arrangement;

b) rearranging an existing subtending service from one multiplexing arrangement to another like multiplexing arrangement in the same wire center; and

c) rearranging an existing service into a high capacity service multiplexing arrangement in the same wire center.

d) rearranging an existing service to a Collocated Interconnection Cross-Connect Service or SPOT Bay Frame and Terminations, which are described in Section 19 following, in the same wire center;

e) rearranging a Collocated Interconnection Cross-Connect Service or SPOT Bay Frame and Terminations, which are described in Section 19 following, to a Switched Access Service in the same wire center; and

When services are rearranged as described above, additional charges for the Rearrangement Charges may apply to all such rearranged services beyond the first without regard to their end-point locations, so long as they are all of the same service type, have the same date due, and are all being rearranged to the same multiplexing arrangement.

6. Switched Access Service (Cont'd)

6.8 Rate Regulations (Cont'd)

6.8.1 Description and Application of Rates and Charges (Cont'd)

(C) Nonrecurring Charges (Cont'd)

(3) Connection Charge

The Switched Access Connection Charge recovers the costs of connecting the trunks/line to the switch. These charges are in addition to any facility charges and are to be applied on a per line/per trunk basis.

(4) Service Order Charge

The Service Order Charge does not apply when a facility and the trunks that ride that facility are being installed at the same time.

(5) In addition, the facility nonrecurring charge will not apply for changing facility capacity or faulty interface (i.e., changes from or to Voice Grade, DS1 or DS3 facilities). No facility nonrecurring charge will apply for "grooming" facilities (i.e., adding new facilities as well as rearranging trunks on existing facilities in order to increase utilization or fill). These charges will not apply as long as the order is placed by December 31, 1995.

(D) Application of Rates

End Office (i.e., Local Switching), the Information Surcharge rates are applied either as premium rates or transitional rates.

The specific application of these rates for the specific customer is dependent upon the Switched Service and the availability of equal access capabilities in the end office to which the service is provided.

The following rules provide the basis for applying the rates and charges

6. Switched Access Service (Cont'd)

6.8 Rate Regulations (Cont'd)

6.8.1 Description and Application of Rates and Charges (Cont'd)

(D) Application of Rates (Cont'd)

(1) Premium rates apply to all Trunkside BSA - MTS/WATS Option, Trunkside BSA-101XXXX Option, access minutes, to all Lineside BSA, Trunkside BSA - 950 Option, access minutes that originate from or terminate at end offices equipped with equal access (i.e., Trunkside BSA-101XXXX Option) capabilities and to all access minutes that originate from or terminate at end offices not equipped with equal access capabilities when the service is provided to customers which furnish interstate MTS/WATS. Premium rates also apply to all Toll Free Data Base Access Service and 900 Access Service minutes that originate from an equal access end office via Trunkside BSA-101XXXX Option, or that originate from a non-equal access office via Trunkside BSA - MTS/WATS Option, and to all Operator Transfer Service minutes that originate from an equal access end office via Trunkside BSA-101XXXX Option.

(2) Transitional rates (i.e., discounted access minute rates) apply to all Lineside BSA, Trunkside BSA - 950 Option, access minutes (measured or assumed) that originate from or terminate at end offices not equipped with equal access capabilities, except for access minutes generated by providers of MTS and WATS. Transitional rates also apply to all 900 Access Service, or Operator Transfer Service minutes that originate from end offices not equipped with equal access capabilities.

(3) (Reserved for Future Use)

(4) When Lineside BSA, and Trunkside BSA - 950 Option Switched Access Service provided to an entry switch (i.e., dial tone office for Lineside BSA, and Trunkside BSA - 950 Package) has usage originating from and/or terminating at both end offices that have been converted to equal access and end offices that have not been converted, the premium and transitional rates for Switched Access Service (including Carrier Common Line) will apply in the following manner:

(a) All access minutes that originate from or terminate at the equal access end office(s) will be billed at premium rates. Access minutes that originate from or terminate at end offices not equipped with equal access capabilities, hereinafter referred to as non-premium access minutes, will continue to be billed at transitional rates. Transitional rates will apply as follows:

6. Switched Access Service (Cont'd)

6.8 Rate Regulations (Cont'd)

6.8.1 Description and Application of Rates and Charges (Cont'd)

(D) Application of Rates (Cont'd)

(4) (Cont'd)

(a) (Cont'd)

(i) The number of non-premium access minutes to be billed at transitional rates is derived by subtracting the number of premium rated access minutes from the total number of access minutes.

(ii) Premium access minutes will be determined as set forth in (b) following.

(b) The number of access minutes to be rated as premium access minutes is determined as follows:

(i) Where measurement capability exists, and end office specific usage data is available, premium rates will apply to all access minutes originating from or terminating at equal access end offices.

(ii) Where measurement capability does not exist and/or end office specific usage data is not available, originating and/or terminating usage will be apportioned between premium and non premium usage as described following. The usage to be apportioned will be the recorded usage or the assumed usage as set forth in 6.8.8 following. Such apportionment will be based on the ratio of the number of subscriber lines in the access area (i.e., local calling area, LATA or end offices subtending the access tandem, as appropriate) of the entry switch that are served by equal access end offices to the total number of subscriber lines in that access area. The ratio thus developed is applied to the total measured or assumed originating Lineside BSA usage, terminating Lineside BSA usage, originating Trunkside BSA - 950 Option usage or terminating Trunkside BSA - 950 Option usage, as applicable, to determine the usage to be billed at premium rates, unless adjusted as set forth in (iii) following.

6. Switched Access Service (Cont'd)

6.8 Rate Regulations (Cont'd)

6.8.1 Description and Application of Rates and Charges (Cont'd)

(D) Application of Rates (Cont'd)

(4) (Cont'd)

(b) (Cont'd)

(ii) (Cont'd)

The ratios used to determine the premium usage will be updated on a quarterly basis. The ratios to be used for the succeeding quarter will be provided to the customer with the last bill rendered in the quarter or mailed separately within five working days after the first day of the new quarter (i.e., January, April, July and October).

For purposes of administering this provision: (1) subscriber lines are defined as exchange service lines, Centrex lines and Centrex-type lines provided by the Telephone Company under its local general services tariffs; (2) the access area is defined as the local calling area of the dial tone office for originating Lineside BSA and FGA, the entire LATA for terminating Lineside BSA and FGA, and all end offices subtending the access tandem for originating and terminating Trunkside BSA - 950 Option and FGB; and (3) the local calling area of the dial tone office is as defined in the Telephone Company's local general services tariffs.

6. Switched Access Service (Cont'd)

6.8 Rate Regulations (Cont'd)

6.8.1 Description and Application of Rates and Charges (Cont'd)

(D) Application of Rates (Cont'd)

(4) (Cont'd)

(b) (Cont'd)

(iii) Where Trunkside BSA-101XXXX Option and FGD Switched Access Service is provided to a customer in an end office(s) where Lineside BSA, Trunkside BSA - 950 Option and FGA or FGB premium access minutes have been determined in accordance with (ii) preceding, such premium access minutes will be adjusted in the following manner. For each Trunkside BSA-101XXXX Option and FGD access minute originating from or terminating at that end office, excluding Switched 56 (S56) Kilobit Service and Operator Transfer Service, the originating or terminating Lineside BSA, Trunkside BSA - 950 Option and FGA or FGB premium access minutes determined as set forth in (ii) preceding will be reduced on a one for one basis, but in no event shall the reduction exceed the total number of Lineside BSA, Trunkside BSA - 950 Option and FGA or FGB premium access minutes originating from or terminating at that end office. The customer will be billed for the revised number of premium access minutes. When 900 Access Service traffic has been combined in the same trunk group with the customer's Trunkside BSA-101XXXX Option and FGD traffic, 900 Access Service minutes shall not be used to offset premium rates as set forth preceding.

6. Switched Access Service (Cont'd)

6.8 Rate Regulations (Cont'd)

6.8.1 Description and Application of Rates and Charges (Cont'd)

(D) Application of Rates (Cont'd)

(4) (Cont'd)

(c) Where originating and/or terminating recording capability does not exist for Lineside BSA provided to an entry switch, an assumed number of access minutes will be used. Assumed minutes of use for Lineside BSA are specified in 6.8.8 following.

The assumed number of access minutes shown in 6.8.8 following for Lineside BSA, only apply when recording capability does not exist in one or both directions, i.e., originating and terminating.

The Telephone Company will provide written notification to all access customers of record within a particular LATA that an end office in that LATA is scheduled to be converted to an equal access end office. This notification will be sent, via certified U.S. Mail, to each customer of record in the LATA where the conversion is scheduled to occur, at least six months in advance of the conversion date.

The customer will have the choice of converting existing services to equal access (i.e., Trunkside BSA-101XXXX Option) at no charge pursuant to the conditions set forth in 6.8.6 following or retaining the existing services. Premium rates will apply to the total access minutes beginning on the actual conversion date, whether the customer chooses to convert to Trunkside BSA-101XXXX Option, or retain existing services.

(5) Where Switched Access Service is provided in conjunction with a CEC or RCC, and the regulations as set forth in 2.4.8, preceding apply, the Telephone Company will apply premium Switched Transport rates when the Telephone Company does not provide end office local switching functions, then the specific application of premium and transitional rates is as set forth in (1) and (2), preceding.

6. Switched Access Service (Cont'd)

6.8 Rate Regulations (Cont'd)

6.8.1 Description and Application of Rates and Charges (Cont'd)

(D) Application of Rates (Cont'd)

(5) (Cont'd)

(a) Entrance Facility

The Entrance Facility monthly rate provides for the communication path between a customer's premises and the SWC of that premises and is assessed based on the capacity of the facilities provided (e.g., Voice Grade, DS1, DS3, DSR, DSSAN, or DSSSP). When Lineside Switched Access service is ordered, the Voice Grade Entrance Facility rate is assessed for each Lineside service requested unless the customer requests an Entrance Facility of higher capacity. The Entrance Facility rate is assessed when the customer premises and the SWC are in the same building. The Entrance Facility rate is in addition to the rates assessed for Direct Trunked Transport and Tandem Switched Transport. Rates and charges are set forth in Section 6.9 following.

(b) Direct Trunked Transport

The Direct Trunked Transport monthly rate provides for the transmission facilities between the SWC of the customer's facilities to the end office or the access tandem based on the capacity of the facility requested, Voice Grade, DS1, DS3, DSSSP, DSR, or DSSAN. DSR is comprised of Nodes, Fiber Mileage (per mile between nodes), and Ports. DSSAN is comprised of a fixed charge by Mileage Band. When Lineside Switched Access service is ordered, the Voice Grade Direct Trunked Transport rate is assessed for each Lineside service requested unless the customer requests a Direct Trunked Transport facility of higher capacity. There are two rates that apply, a fixed rate and a rate per mile. The Direct Trunked Transport rate is in addition to the Entrance Facility rate. Mileage measurement is described in Section 6.8.13 following. Rates and charges are set forth in Section 6.9 following.

6. Switched Access Service (Cont'd)

6.8 Rate Regulations (Cont'd)

6.8.1 Description and Application of Rates and Charges (Cont'd)

(D) Application of Rates (Cont'd)

(5) (Cont'd)

(c) Tandem Transport Charge

The Tandem Transport Charge is assessed on a per minute of use basis. There are two rates that apply, a fixed rate and a rate per mile/per minute. The Tandem Transport rate is in addition to the Entrance Facility rate. Mileage measurement is described in Section 6.8.13 following. Rates and charges are set forth in Section 6.9 following.

(d) Tandem Switching

The Tandem Switching rate is assessed on a per minute of use basis and is applicable to all Switched Access minutes of use utilizing an access tandem via Tandem Switched Trunk. The Tandem Switching rate is in addition to the Tandem Transmission rate and the rates associated with the Entrance Facility. Rates and charges are set forth in Section 6.9 following.

(e) Dedicated Tandem Trunk Port

The Dedicated Tandem Switching Trunk Port is a monthly rate assessed per activated trunk for every dedicated trunk terminating on the serving wire center side of the access tandem. Rates and charges are set forth in Section 6.9 following.

6. Switched Access Service (Cont'd)

6.8 Rate Regulations (Cont'd)

6.8.1 Description and Application of Rates and Charges (Cont'd)

(D) Application of Rates (Cont'd)

(5) (Cont'd)

(f) Interconnection Charge

The Interconnection Charge is assessed on a per minute of use basis and is applicable to all Switched Access minutes of use based on the direction of the traffic and whether or not it is collocated or non-collocated. The originating Interconnection Charge rate will apply to all originating access minutes of use except those associated with calls placed to 700, 800, and 900 numbers. The terminating Interconnection Charge rate will apply to all terminating access minutes of use and all originating access minutes of use associated with calls placed to 700, 800, and 900 numbers.

(g) Host/Remote Transport

When the customer orders Switched Access via the tandem to a remote switching system or module (RSS or RSM), Tandem Transmission rates are assessed between the SWC and the host office or between the access tandem and the host office, whichever is applicable. In addition, Host/Remote Transmission rates are assessed between the host and the RSS or RSM.

When the customer orders DTT to a RSS or RSM, DTT rates are assessed between the SWC and the host office and Host/Remote Transmission rates are assessed between the host and the RSS or RSM. Mileage measurement rules are set forth in 6.8.13 following.

(6) Where Switched Access Service is used to carry traffic originated from a TRS Center, Switched Transport rates apply. Local Switching rates do not apply.

6. Switched Access Service (Cont'd)

6.8 Rate Regulations (Cont'd)

6.8.1 Description and Application of Rates and Charges (Cont'd)

(D) Application of Rates (Cont'd)

(7) FGA provided with a voice grade interface the following rate elements are applicable:

- Entrance Facility - 2 wire or 4 wire
- Direct Trunked Transport, fixed and per mile, measured from the SWC to the DTO.
- Local Switching MOU
- Information Surcharge
- Carrier Common Line
- The Interconnection rate applies also to all Local Switching MOUs

Terminating Usage Rate Elements
Tandem fixed MOU and per mile MOU rates apply from the DTO to the End Office where the call terminates.
Local Switching MOU.
Information Surcharge.
Carrier Common Line.
The Interconnection rate applies also to all Local Switching MOU.

Originating Usage Rate Elements
Local Switching MOU
Information Surcharge
Carrier Common Line
The IC rate applies to all Local Switching MOU.

6. Switched Access Service (Cont'd)

6.8 Rate Regulations (Cont'd)

6.8.1 Description and Application of Rates and Charges (Cont'd)

(D) Application of Rates (Cont'd)

(8) FGA provided with a digital interface the following rate elements are applicable:

- Entrance Facility - DS1
- Direct-Trunked Transport, fixed and per mile, measured from the SWC to the DTO.
- Multiplexer
- Local Switching MOU
- Information Surcharge
- Carrier Common Line
- The Interconnection rate applies also to all Local Switching MOUs

The same originating and terminating usage rate elements apply as for non-digital interface as indicated in paragraph (7) above.

(9) Multiplexing

No multiplexing charge will apply except as indicated in (8) above if an individual circuit carrying trunks is at a DS1 level (Entrance Facilities and Direct Trunked Transport) and terminating at a specific switch.

6. Switched Access Service (Cont'd)

6.8 Rate Regulations (Cont'd)

6.8.2 Minimum Periods

(A) The minimum service period for Switched Transport entrance facilities and direct trunked transport are as follows:

DS1: 2 months
DS3: 12 months
DSR: 12 months
DSSSP: 12 months
FMS: 12 months

(B) The minimum periods for DSOTS service are set forth in Section 6.8.25(C)(6)(d) following.

(C) All other Switched Access Service is provided for a minimum period of one month.

(D) When service is disconnected prior to the expiration of the minimum period, charges are applicable for the balance of the minimum period. Customers may at any time change their service payment option to a Term Payment Plan without assessment of the minimum service charge.

6.8.3 Reserved for Future Use

6.8.4 Minimum Monthly Charge

Switched Access Service is subject to a minimum monthly charge. The minimum charge applies for the total capacity provided. The minimum monthly charge consists of the following elements:

The minimum monthly charge for the Local Switching, the Information Surcharge, the Switched 56 (S56) Kilobit Service, and the Operator Transfer Service rate elements is the sum of the charges set forth in Section 6.9.2(A), 6.9.5, 6.9.7, and Section 6.9.8 following for the measured or assumed usage for the month. In addition, for Trunkside BSA-101XXXX Option and Feature Group D Switched Access Service, the minimum monthly charge includes the charges for the Equal Access Recovery Charge rate element as set forth in Section 6.9.5 following.

For a Dedicated Network Access Link, the minimum monthly charge for a month or fraction thereof is the applicable monthly rates for the service as set forth in Section 6.9.1(O) following.

6. Switched Access Service (Cont'd)

6.8 Rate Regulations (Cont'd)

6.8.5 Change of Feature Group or BSA Type

Changes from one type of Feature Group to another type of Feature Group, or from one type of BSA to another type of BSA, will be treated as a discontinuance of one type of service and a start of another. Nonrecurring charges will apply, with two exceptions.

(A) When a customer upgrades a Feature Group A or B service to a Feature Group D service, or upgrades a Lineside BSA or Trunkside BSA - 950 Option to a Trunkside BSA-101XXXX Option, the nonrecurring charge will not apply if the following conditions are met:

(1) The same customer premises must be maintained on the order for the Trunkside BSA-101XXXX Option or FGD trunks, unless mutually agreed upon by the Telephone Company and the customer when appropriate Telephone Company central office switching equipment and other facilities exists, and

(2) In the case of conversion of an office to equal access:

- the IC submits a disconnect order for Lineside BSA, Trunkside BSA - 950 Option, FGA or FGB within 30 days after the IC is notified by the Telephone Company as to the results of the final Presubscription allocation of customers to the IC. Further, the IC must request an effective date for the disconnect orders within 60 days after the Telephone Company has notified the IC of the results of the final Presubscription allocation, or

6. Switched Access Service (Cont'd)

6.8 Rate Regulations (Cont'd)

6.8.5 Change of Feature Group or BSA Type (Cont'd)

(A) (Cont'd)

(3) In the case of offices already converted to equal access:

- the orders for the disconnect of the FGA or FGB service and the start of FGD service are placed with the Telephone Company at the same time, and

- the IC requests the FGA or B service be disconnected no more than 90 days after the start of FGD services.

- the orders for the disconnect of the Lineside BSA or Trunkside BSA - 950 Option and the start of Trunkside BSA-101XXXX Option are placed with the Telephone Company at the same time, and

- the IC requests the Lineside BSA or Trunkside BSA - 950 Option be disconnected no more than 90 days after the start of Trunkside BSA-101XXXX Option.

(4) Subject to the availability of appropriate Telephone Company central office switching equipment and other facilities, customers may upgrade from one-way Trunkside BSA - 950 Option or FGB trunks to two-way Trunkside BSA-101XXXX Option or FGD trunks will not be subject to charge as long as the number of two-way Trunkside BSA-101XXXX Option or FGD trunks does not exceed the number of one-way Trunkside BSA - 950 Option or FGB trunks disconnected, i.e., a one-for-one substitution of one-way trunks for two-way trunks. The customer must retain the same technical interface specifications unless otherwise mutually agreed upon by the Telephone Company and the customer, when appropriate Telephone Company central office switching equipment and other facilities are available. One-way Trunkside BSA - 950 Option or FGB trunks may be upgraded to two-way Trunkside BSA-101XXXX Option or FGD trunks where equipment and facilities are available Conversion of one-way Trunkside BSA - 950 Option or FGB trunks to two-way Trunkside BSA-101XXXX Option or FGD trunks will be scheduled on a project basis by the Telephone Company, in cooperation with the customer.

6. Switched Access Service (Cont'd)

6.8 Rate Regulations (Cont'd)

6.8.5 Change of Feature Group or BSA Type (Cont'd)

(A) (Cont'd)

(5) Customers who are upgrading from tandem or end office routed Trunkside BSA - 950 Option or FGB trunks to direct end office or tandem routed Trunkside BSA-101XXXX Option or FGD trunks will not be subject to nonrecurring charges as long as the number of trunks connected do not exceed the number of trunks disconnected, i.e., a one-for-one substitution of tandem routed trunks for end office trunks or end office trunks for tandem routed trunks. The customer must meet the conditions as specified in section 6.1.2(A)(7)(d) preceding and 6.8.6 following.

(6) Subject to the availability of appropriate Telephone Company central office switching equipment and facilities, customers may upgrade from Trunkside BSA - 950 Option or FGB trunks with MF signaling to Trunkside BSA-101XXXX Option or FGD trunks with SS7 signaling or 64CCC will not be subject to charge as long as the customer requests SS7 signaling or 64CCC on their new order for Trunkside BSA-101XXXX Option or FGD trunks. Out of band signaling connections provided under Common Channel Signaling Access Service must be established as specified in section 6.4.3(A) preceding. The number of Trunkside BSA-101XXXX Option or FGD trunks with SS7 signaling or 64CCC cannot exceed the number of Trunkside BSA - 950 Option or FGB trunks with MF signaling that are disconnected, i.e., a one-for-one substitution of Trunkside BSA-101XXXX Option or FGD trunks with SS7 signaling or 64CCC for Trunkside BSA - 950 Option or FGB trunks with MF signaling.

The Telephone Company reserves the right to determine if Trunkside BSA - 950 Option and FGB may be upgraded to Trunkside BSA-101XXXX Option and FGD and converted to out of band signaling at the same time. If necessary, the Telephone Company will treat such requests as two separate projects and charges will be waived as specified above and in Section 6.1.2(A)(7)(e)(5) preceding.

6. Switched Access Service (Cont'd)

6.8 Rate Regulations (Cont'd)

6.8.5 Change of Feature Group or BSA Type (Cont'd)

(B) When FGC service is upgraded to FGD service, or a Trunkside BSA - MTS/WATS Option is upgraded to a Trunkside BSA-101XXXX Option, the nonrecurring charge will not apply. Because FGC and/or Trunkside BSA - MTS/WATS Option is no longer available in an end office once the end office is equipped with equal access capabilities, (i.e., Trunkside BSA-101XXXX Option and FGD), such upgrades will be performed by the Telephone Company without the customer being required to place an order for the change.

When the effective dates for the disconnect and start of service are the same, minimum period obligations will not change, (i.e., the time elapsed in the existing minimum period obligations will be credited to the minimum period obligations for Trunkside BSA-101XXXX Option and FGD). When the effective dates for the disconnect and start of service are different, new minimum period obligations will be established for Trunkside BSA-101XXXX Option and FGD service. For all other changes from one type of Feature Group to another type of Feature Group, or from one type of BSA to another type of BSA, new minimum period obligations will also be established.

6.8.6 Conversion of Existing Feature Groups to Basic Service Arrangements

Nonrecurring charges will not apply to the conversion of existing Feature Groups to their unbundled BSA equivalents.

When a customer converts an existing Feature Group to its unbundled BSA equivalent, minimum period obligations will not change, i.e., the time elapsed in the existing minimum period obligations will be credited to the minimum period obligations for the BSA. For changes from a BSA to a Feature Group during the transition period as noted above, new minimum period obligations will be established.

6. Switched Access Service (Cont'd)

6.8 Rate Regulations (Cont'd)

6.8.6 Conversion of Existing Feature Groups to Basic Service Arrangements (Cont'd)

When the initial order for Trunkside BSA - 950 Option, in a LATA, is received by the Telephone Company, that order will cause conversion of existing FGB services, in that LATA, to the Trunkside BSA - 950 Option rate structure for the CIC associated with that order.

When the initial order for Trunkside BSA - MTS/WATS Option, in a LATA, is received by the Telephone Company, that order will cause conversion of existing FGC services, in that LATA, to the Trunkside BSA - MTS/WATS Option rate structure for the CIC associated with that order.

When the initial order for Trunkside BSA-101XXXX Option, in a LATA, is received by the Telephone Company, that order will cause conversion of existing FGD services, in that LATA, to the Trunkside BSA-101XXXX Option rate structure for the CIC associated with that order.

Orders for Lineside BSA will not cause conversion of FGA services within the LATA where the Lineside BSA is ordered. However, Lineside BSA and FGA services cannot be combined in the same Hunting Service Arrangement.

All orders or customer requests to convert existing Feature Group services to their ONA equivalents must be received by the Telephone Company by May 1, 1993. If a customer does not submit an order causing conversion of existing Feature Group services, or request that the Telephone Company convert existing Feature Group services to their ONA equivalents by May 1, 1993, then those Feature Group services which have not been converted will be converted to their ONA equivalents on July 1, 1993. Any optional feature provisioned with a Feature Group service which has a corresponding BSE will be charged the BSE rate, and any option which does not have a corresponding BSE will remain as an optional feature.

6. Switched Access Service (Cont'd)

6.8 Rate Regulations (Cont'd)

6.8.7 Moves

A move involves a change in the physical location of the customer premises which also involves a connection to a different rate demarcation point.

The charges for the move are dependent on whether the move is to a new location within the same building or to a different building.

(A) Moves Within the Same Building

When the move is to a new location within the same building, the charge for the move will be an amount equal to one half of the first nonrecurring (i.e., installation) charge for the service termination affected. There will be no change in the minimum period requirements.

(B) Moves to a Different Building

Moves to a different building will be treated as a discontinuance and start of service and all associated nonrecurring charges will apply. New minimum period requirements will be established for the new service. The customer will also remain responsible for satisfying all outstanding minimum period charges for the discontinued service.

6.8.8 Measuring Access Minutes

Customer traffic to end offices will be measured (i.e., recorded or assumed) by the Telephone Company at end office switches or access tandem switches. Originating and terminating calls will be measured (i.e., recorded or assumed) by the Telephone Company to determine the basis for computing chargeable access minutes. For terminating calls over Lineside BSA, Trunkside BSA - 950 Option, Trunkside BSA - MTS/WATS Option to Toll Free, Trunkside BSA-101XXXX Option FGA, FGB, FGC to Toll Free, and FGD, and for originating calls over MTS/WATS-type Lineside BSA, Trunkside BSA - 950 Option, Trunkside BSA-101XXXX Option, FGA, FGB and FGD, the measured access minutes are the chargeable access minutes. For originating calls over FX/ONAL Lineside BSA, Trunkside BSA - MTS/WATS Option, FGA and FGC, chargeable originating access minutes are derived from recorded minutes in the following manner.

6. Switched Access Service (Cont'd)

6.8 Rate Regulations (Cont'd)

6.8.8 Measuring Access Minutes (Cont'd)

Step 1: Obtain recorded originating minutes and messages (measured as set forth in (A) and (C) following for FX/ONAL Lineside BSA, Trunkside BSA - MTS/WATS Option and FGA and FGC respectively) from the appropriate recording data.

Step 2: Obtain the total attempts by dividing the originating measured messages by the completion ratio. Completion ratios (CR) are obtained separately for the major call categories such as DDD, operator, Toll Free Data Base Access Service, 900 Access Service, directory assistance and international from a sample study which analyzes the ultimate completion status of the total attempts which receive acknowledgment from the customer. That is, Measured Messages divided by Completion Ratio equals Total Attempts.

Step 3: Obtain the total non-conversation time additive (NCTA) by multiplying the total attempts (obtained in Step 2) by the NCTA per attempt ratio. The NCTA per attempt ratio is obtained from the sample study identified in Step 2 by measuring the non- conversation time associated with both completed and incompleted attempts. The total NCTA is the time on a completed attempt from customer acknowledgment of receipt of call to called party answer (set up and ringing) plus the time on an incompleted attempt from customer acknowledgment of call until the access tandem or end office receives a disconnect signal (ring - no answer, busy or network blockage). That is, Total Attempts times Non-Conversation Time per Attempt Ratio equals Total NCTA.

Step 4: Obtain total chargeable originating access minutes by adding the total NCTA (obtained in Step 3) to the recorded originating measured minutes (obtained in Step 1). That is, Measured Minutes plus NCTA equals Chargeable Originating Access Minutes.

6. Switched Access Service (Cont'd)

6.8 Rate Regulations (Cont'd)

6.8.8 Measuring Access Minutes (Cont'd)

Following is an example which illustrates how the chargeable originating access minutes are derived from the measured originating minutes using this formula.

Where:	Measured Minutes (M. Min.)	= 7,000
	Measured Messages (M. Mes.)	= 1,000
	Completion Ratio (CR)	= .75
	NCTA per Attempt	= .4

(1) Total Attempts = $\frac{1{,}000(\text{M. Mes.})}{.75\ (\text{CR})}$ = 1,333.33

(2) Total NCTA = .4 (NCTA per Attempt) x 1,333.33 = 533.33

(3) Total Chargeable Originating Access Minutes =
7,000(M.Min.) + 533.33(NCTA) = 7,533.33

When assumed minutes are used, the assumed minutes are the chargeable access minutes.

Lineside BSA and FGA access minutes or fractions thereof, the exact value of the fraction being a function of the switch technology where the measurement is made, are accumulated over the billing period for each line or hunt group, and are then grounded up to the nearest access minute for each line or hunt group. Trunkside BSA - 950 Option, Trunkside BSA - MTS/WATS Option, Trunkside BSA-101XXXX Option, FGB, FGC and FGD access minutes or fractions thereof, the exact value of the fraction being a function of the switch technology where the measurement is made, are accumulated over the billing period for each end office, and are then rounded up to the nearest access minute for each end office.

Assumed minutes are used for Lineside BSA, Trunkside BSA - 950 Option, FGA and FGB services which originate or terminate in end offices not equipped with measurement capabilities.

6. Switched Access Service (Cont'd)

6.8 Rate Regulations (Cont'd)

6.8.8 Measuring Access Minutes (Cont'd)

The assumed average interstate access minutes for Lineside BSA and FGA are as set forth following. When a Lineside BSA or FGA service arranged for two way calling is provided where neither originating or terminating access minutes are recorded, the applicable assumed average interstate minutes of use figure is the "originating and terminating" total as set forth below. The "originating and terminating" total is split between originating and terminating by using the "originating" and "terminating" figures as also set forth below. When a Lineside BSA or FGA service is arranged for two way calling and recording capability is present only in one direction, the number of access minutes per line will be the "originating and terminating" total or the recorded usage whichever is greater. If the usage in the measured direction exceeds the "originating and terminating" total, it will be assumed that there is zero usage in the unmeasured direction. If the measured usage is less than the "originating and terminating total", the usage in the unmeasured direction will be the "originating and terminating" total minus the measured usage.

When an originating only service is provided where originating access minutes are not recorded, the applicable assumed average originating access minutes are the "originating" totals as set forth below.

When a terminating only service is provided where terminating access minutes are not recorded, the applicable assumed average terminating access minutes are the "terminating" totals as set forth below.

Assumed Minutes of Use, All Lineside BSA and FGA Services:

Originating and Terminating	3,386
Originating	1,094
Terminating	2,292

6. Switched Access Service (Cont'd)

6.8 Rate Regulations (Cont'd)

6.8.8 Measuring Access Minutes (Cont'd)

(A) Lineside BSA and Feature Group A Usage Measurement

For originating calls over Lineside BSA and FGA, usage measurement begins when the originating Lineside BSA or FGA entry switch receives an off-hook supervisory signal forwarded from the customer's point of termination. (Where Lineside BSA and FGA is used for MTS/WATS-type services, this off-hook signal is generally provided by the customer's equipment. Where Lineside BSA and FGA is used for FX/ONAL services, the off-hook signal is generally forwarded by the customer's equipment when the called party answers.)

The measurement of originating call usage over Lineside BSA and FGA ends when the originating Lineside BSA or FGA entry switch receives an on-hook supervisory signal from either the originating end user's end office, indicating the originating end user has disconnected, or the customer's point of termination, whichever is recognized first by the entry switch.

For terminating calls over Lineside BSA and FGA, usage measurement begins when the terminating Lineside BSA or FGA entry switch receives an off-hook supervisory signal from the terminating end user's end office, indicating the terminating end user has answered. The measurement of terminating call usage over Lineside BSA and FGA ends when the terminating Lineside BSA or FGA entry switch receives an on-hook supervisory signal from either the terminating end user's end office, indicating the terminating end user has disconnected, or the customer's point of termination, whichever is recognized first by the entry switch.

(B) Trunkside BSA - 950 Option and Feature Group B Usage Measurement

For originating calls over Trunkside BSA - 950 Option and FGB, usage measurement begins when the originating Trunkside BSA - 950 Option or FGB entry switch receives answer supervision forwarded from the customer's point of termination, indicating the customer's equipment has answered.

The measurement of originating call usage over Trunkside BSA - 950 Option and FGB ends when the originating Trunkside BSA - 950 Option or FGB entry switch receives disconnect supervision from either the originating end user's end office, indicating the originating end user has disconnected, or the customer's point of termination, whichever is recognized first by the entry switch.

6. Switched Access Service (Cont'd)

6.8 Rate Regulations (Cont'd)

6.8.8 Measuring Access Minutes (Cont'd)

(B) Trunkside BSA - 950 Option and Feature Group B Usage Measurement (Cont'd)

For terminating calls over Trunkside BSA - 950 Option and FGB, usage measurement begins when the terminating Trunkside BSA - 950 Option or FGB entry switch receives answer supervision from the terminating end user's end office, indicating the terminating end user has answered.

The measurement of terminating call usage over Trunkside BSA - 950 Option and FGB ends when the terminating Trunkside BSA - 950 Option or FGB entry switch receives disconnect supervision from either the terminating end user's end office, indicating the terminating end user has disconnected, or the customer's point of termination, whichever is recognized first by the entry switch.

(C) Trunkside BSA - MTS/WATS Option and Feature Group C Usage Measurement

For originating calls over Trunkside BSA - MTS/WATS Option and FGC, usage measurement begins when the originating Trunkside BSA - MTS/WATS Option or FGC entry switch receives answer supervision from the customer's point of termination, indicating the called party has answered.

The measurement of originating call usage over Trunkside BSA - MTS/WATS Option and FGC ends when the originating Trunkside BSA - MTS/WATS Option or FGC entry switch receives disconnect supervision from either the originating end user's end office, indicating the originating end user has disconnected, or the customer's point of termination, whichever is recognized first by the entry switch.

For terminating calls over Trunkside BSA - MTS/WATS Option and FGC to services other than Toll Free, 900 or Directory Assistance, terminating Trunkside BSA - MTS/WATS Option and FGC usage is not directly measured at the terminating entry switch, but is imputed from originating usage, excluding usage from calls to Toll Free, 900 and Directory Assistance Services. Jurisdictional assignment of Toll Free Service over Trunkside BSA - MTS/WATS Option and FGC is imputed for both originating and terminating usage.

6. Switched Access Service (Cont'd)

6.8 Rate Regulations (Cont'd)

6.8.8 Measuring Access Minutes (Cont'd)

(C) Trunkside BSA - MTS/WATS Option and Feature Group C Usage Measurement (Cont'd)

In either case where usage or assignment is imputed, the Telephone Company will provide to the Interexchange Carriers the factors used.

For terminating calls over Trunkside BSA - MTS/WATS Option and FGC, to Toll Free service, usage measurement begins when the terminating Trunkside BSA - MTS/WATS Option or FGC entry switch receives answer supervision from the terminating end user's end office, indicating the terminating Toll Free Service end user has answered.

The measurement of terminating call usage over Trunkside BSA - MTS/WATS Option and FGC to Toll Free service ends when the terminating Trunkside BSA - MTS/WATS Option or FGC entry switch receives an on-hook supervisory signal from the terminating end user's end office, indicating the terminating Toll Free Service end user has disconnected, or from the customer's point of termination, whichever is recognized first by the entry switch.

(D) Trunkside BSA-101XXXX Option and Feature Group D Usage Measurement

For originating calls over Trunkside BSA-101XXXX Option and FGD with multifrequency address signaling, usage measurement begins when the originating Trunkside BSA-101XXXX Option or FGD entry switch receives the first wink supervisory signal forwarded from the customer's point of termination. For originating calls over Trunkside BSA-101XXXX Option and FGD with out of band signaling, usage measurement begins when the last point of switching sends the initial address message to the customer.

The measurement of originating call usage over Trunkside BSA-101XXXX Option and FGD ends when the originating Trunkside BSA-101XXXX Option or FGD entry switch receives disconnect supervision from either the originating end user's end office, indicating the originating end user has disconnected, or the customer's point of termination, whichever is recognized first by the entry switch.

6. Switched Access Service (Cont'd)

6.8 Rate Regulations (Cont'd)

6.8.8 Measuring Access Minutes (Cont'd)

(D) Trunkside BSA-101XXXX Option and Feature Group D Usage Measurement (Cont'd)

For terminating calls over Trunkside BSA-101XXXX Option and FGD to services other than Toll Free Data Base Access Service, 900 Access Service or Directory Assistance, total terminating Trunkside BSA-101XXXX Option and FGD usage is directly measured. Jurisdictional assignment for Trunkside BSA-101XXXX Option and FGD is imputed for calls except for 900 Access Service and Directory Assistance Services. When assignment is imputed, the Telephone Company will provide to the Interexchange Carriers the factors used.

For terminating calls over Trunkside BSA-101XXXX Option and FGD, the measurement of access minutes begins when the terminating Trunkside BSA-101XXXX Option or FGD entry switch receives answer supervision from the terminating end user's end office indicating the terminating end user has answered.

The measurement of terminating call usage over Trunkside BSA-101XXXX Option and FGD ends when the terminating Trunkside BSA-101XXXX Option or FGD entry switch receives disconnect supervision from either the terminating end user's end office, indicating the terminating end user has disconnected, or the customer's point of termination, whichever is recognized first by the entry switch.

For purposes of assessing the Operator Transfer Service charge as specified in Section 6.1.2(B)(7) preceding and Section 6.9.8 following, a call is considered transferred when the Telephone Company operator activates the switch transferring the call to the designated customer.

6. Switched Access Service (Cont'd)

6.8 Rate Regulations (Cont'd)

6.8.8 Measuring Access Minutes (Cont'd)

(E) 500 Access Service and Toll Free Data Base Access Service Usage Measurement

Usage measurement from equal access end offices without the customer identification function begins when the originating end office switch receives off-hook supervision forwarded from the customer's point of termination, indicating the transmitted digits have been received.

Usage measurement from equal access end offices with the customer identification function begins when the originating end office switch receives the first wink supervisory signal forwarded from the customer's point of termination.

In all cases, usage measurement ends when the originating end office receives on-hook disconnect supervision from either the originating end user's end office, indicating the originating end user has disconnected, or the customer's point of termination, whichever is recognized first by the end office.

6.8.9 Reserved

6. Switched Access Service (Cont'd)

6.8 Rate Regulations (Cont'd)

6.8.10 Application of Rates for Extension Service

Lineside BSA and Feature Group A Switched Access Service is available with extensions, i.e., additional terminations of the service at different building(s) in the same or a different LATA. Lineside BSA and Feature Group A extensions in the same LATA and same state are charged for under the Telephone Company's local general services tariffs.

Lineside BSA and Feature Group A extensions in different LATAs or in a different state in the same LATA are provided and charged for as Special Access Service. The rate elements which apply are: A Voice Grade Channel Termination, Channel Mileage, if applicable, and Signaling Capability, if applicable. All appropriate monthly rates and nonrecurring charges set forth in 7.5 following will apply. Such extensions are ordered as set forth in 5.2 preceding.

6.8.11 Message Unit Credit

Calls from end users to the seven digit local telephone numbers associated with Lineside BSA and Feature Group A Switched Access Service are subject to Telephone Company general services tariffs charges (including message unit and toll charges as applicable). The monthly bills rendered to customers for their Lineside BSA and Feature Group A Switched Access Service will include a credit as defined in 2.6 preceding to reflect any message unit charges collected from their end users under the Telephone Company's local general services tariffs. The credit will apply for recorded originating usage or for assumed originating usage, as appropriate for the Lineside BSA and FGA service provided. When the credit is applied on assumed usage, such credit will not exceed the assumed levels of usage set forth in 6.8.8 preceding. No credit will apply for any terminating Lineside BSA and FGA access minutes. The Message Unit Credit for originating Lineside BSA and FGA access minutes is as set forth in 6.9.3 following.

6.8.12 Local Information Delivery Services

Calls over Switched Access in the terminating direction to certain community information services will be rated under the applicable rates for Switched Access Service as set forth in 6.9 following. In addition, the charges per call as specified under the Telephone Company's local general services tariffs, e.g., 976 Network Services, will also apply.

6. Switched Access Service (Cont'd)

6.8 Rate Regulations (Cont'd)

6.8.13 Mileage Measurement

The mileage to be used to determine the monthly rate for the Switched Transport is calculated on the airline distance between the end office switch where the call carried by Switched Transport originates or terminates and the customer's serving wire center or between the end office and the tandem except as set forth in (A) through (J) following. The mileage to be used to determine the monthly rate for the Dedicated Network Access Link (DNAL) Channel Mileage is calculated on the airline distance between the Telephone Company switch or central office where the corresponding BSE (e.g., Message Services Interface and Make Busy Arrangements) capability exists and the serving wire center associated with the customer's designated premises. The V&H coordinates method is used to determine mileage. This method is set forth in National Exchange Carrier Association Tariff F.C.C. NO. 4, for Wire Center and Interconnection Information Tariff (V & H Coordinates).

To determine the rate to be billed compute the mileage using the V&H coordinates method as stated above. If the calculation results in a fraction of a mile, always round up to the next whole mile.

DNAL mileage is shown in 6.9.1 following in terms of a per mile structure. To determine the rate to be billed, first determine the mileage using the V&H coordinates method, as set forth in the National Exchange Carrier Association Tariff F.C.C. No. 4, and apply the rates. When the calculation results in a fraction of a mile, always round up to the next whole mile before applying the rates.

Exceptions to the mileage measurement rules are as follows:

(A) Mileage for access minutes in the originating direction over Lineside BSA and Feature Group A Switched Access Service will be calculated on an airline basis, using the V&H coordinates method, between the end office switch where the Lineside BSA and Feature Group A switching dial tone is provided and the customer's serving wire center for the Switched Access Service provided. When providing the Lineside BSA and Feature Group A FX/ONAL dial tone portion of a service that connects to jointly provided Special Access Service in a Corridor, the access minutes will be calculated in the zero mile band.

6. Switched Access Service (Cont'd)

6.8 Rate Regulations (Cont'd)

6.8.13 Mileage Measurement (Cont'd)

(B) When a non AT&T customer premises is within five miles of an AT&T class 4 office, the Local Transport mileage for a call which is carried over a premium rated Switched Access Service, originating or terminating through an end office switch, shall be the distance as would be determined from that end office switch to the serving wire center for that AT&T class 4 office unless the customer specifies that for an entire LATA, it wants all measurements determined from its serving wire center. This designation (i.e., which serving wire center to use in calculating mileage) may be changed only once in any 12 month period. Such change will be made without charge(s) to the customer.

(C) When the Alternate Traffic Routing optional feature/BSE is provided with Trunkside BSA - 950 Option, Trunkside BSA - MTS/WATS Option, Trunkside BSA-101XXXX Option and Feature Groups B, C, or D, the Switched Transport access minutes will be apportioned between the two trunk groups used to provide this feature. Such apportionment will be based on a ratio derived from the customer's access order. The ratio for each trunk group, or percentage of total traffic to be attributed to each trunk group, will be determined by dividing the service capacity for each trunk group by the sum of capacity for both trunk groups. The resulting percentage for each trunk group will be multiplied times the total traffic to apportion usage to the individual trunk group. This apportionment will serve as the basis for Switched Transport mileage calculation.

For Trunkside BSA - 950 Option, Trunkside BSA - MTS/WATS Option, Trunkside BSA-101XXXX Option and Feature Group B, C, or D traffic routed directly to an end office, traffic is designated to a specific trunk group based on the actual measured data which is recorded.

(D) When terminating Trunkside BSA - MTS/WATS Option and Feature Group C Switched Access Service provided from multiple customer premises to an end office not equipped with measurement capabilities, the total Switched Transport access minutes for that end office will be apportioned among the trunk groups accessing the end office on the basis of capacity ordered for each of those trunk groups. This apportionment will serve as basis for Switched Transport mileage calculation.

6. Switched Access Service (Cont'd)

6.8 Rate Regulations (Cont'd)

6.8.13 Mileage Measurement (Cont'd)

(E) Switched transport mileage for 500 Access Service, Toll Free Data Base Access Service, and 900 Access Service is based on the airline distance between the end office switch where the 500 Access Service, Toll Free Data Base Access Service, and 900 Access Services traffic originates and the customers serving wire center. For 500 Access service, switched transport mileage is based on the airline distance between the end office, hubbing office or operator switch where the 500 call originates and the customers serving wire center.

(F) For Feature Group Lineside BSA, Trunkside BSA - 950 Option Trunkside BSA - MTS/WATS Option, Trunkside BSA-101XXXX Option and A, B, C, or D access minutes originating from or terminating to a WATS Access Line Service, the Switched Transport is calculated based on the airline distance, using the V & H Coordinates method, between the customer's premises Trunkside BSA - MTS/WATS Option, Trunkside BSA-101XXXX Option and Feature Group C or D serving wire center and the WATS serving office.

(G) Mileage measurement for originating and terminating Trunkside BSA - 950 Option, Trunkside BSA - MTS/WATS Option, Trunkside BSA-101XXXX Option and FGB, FGC, and FGD switched access services ordered to, and for Lineside BSA and FGA calls terminated to, a remote switching module (RSM) is calculated on an airline basis using the V&H coordinates method, between the end office that serves as the Host/Remote switch for the RSS and the customer's serving wire center for the Switched Access Service provided.

(H) Mileage measurement for CCSAS will be calculated on an airline basis, using the V&H coordinates method, between the serving wire center of the customer's SPOI and the Telephone Company's STP.

(I) When the Switched Transport for Switched Access Service is provided by the Telephone Company and the end user connection is provided by a CEC or a RCC, mileage for access will be calculated on an airline basis, using the V & H Coordinate Method, between the customer's serving wire center and the serving wire center of the MTSO.

(J) For FGD and Trunkside BSA-101XXXX Option services used to carry calls originated from a TRS Center, mileage will be measured, on an airline basis, between the customer's serving wire center for the Switched Service provided and the TRS Center.

6. Switched Access Service (Cont'd)

6.8 Rate Regulations (Cont'd)

6.8.14 Facility Hubs

A customer has the option of ordering high capacity facilities (i.e., DS1 or DS3) to a facility Hub for distributing or channelizing to individual services requiring lower capacity facilities (e.g., Voice Grade or DS1).

When high capacity facilities are provided between a customer premises and a facility Hub, the facility will not be considered an end-to-end service until an associated channelized service is installed. The facility Hub will not be considered as a customer premises.

Different locations may be designated by the Telephone Company as Hubs for different facility capacities, e.g., multiplexing from DS3 to DS1 may occur at one location while multiplexing from DS1 to Voice Grade may occur at a different location. When ordering, the customer will specify the desired multiplexing Hub(s) selected from the National Exchange Carrier Association Tariff F.C.C. No. 4. This Tariff identifies the type(s) of multiplexing functions which are available and the serving wire centers at which they are available.

The types of multiplexing arrangements available include the following:

- from higher to lower bandwidth
- from high capacity to voice grade channels

End to end services may be provided on channels of these facilities to a Hub. The transmission performance for the end to end service provided between customer designated premises will be that of the lower capacity or bit rate. For example, when a 1.544 Mbps facility is multiplexed to voice frequency channels, the transmission performance of the channelized services will be Voice Grade, not High Capacity.

The Telephone Company will commence billing the monthly rate for the facility to the Hub on the date specified by the customer on the service order. Additional individual services utilizing these facilities may be installed coincident with the installation of the facility to the Hub, or may be ordered and/or installed at a later date, at the option of the customer. The customer who orders the High Capacity Service must order all associated individual Access Channelized Services. The customer will be billed for a high capacity Entrance Facility, Direct Trunked Transport, Channel Mileage (when applicable), and the multiplexing arrangements at the time the facility is installed. Additional individual service rates (by service type) will apply for an Entrance Facility for additional Direct Trunked Transport (as required) for each subsequent channelized service. These will be billed to the customer as each individual service is installed.

6. Switched Access Service (Cont'd)

6.8 Rate Regulations (Cont'd)

6.8.14 Facility Hubs (Cont'd)

In addition, Hubbing may be provided at an end office if all the circuits to be multiplexed are on an individual Direct Trunked facility are message and equipment is available.

6.8.15 Shared Use

Shared use occurs when Switched Access Service and Special Access Service are provided over the same analog, digital high capacity, or SONET service through a common interface. The regulations governing the provision of Shared Use Facilities are set forth in 7.4.8 following.

6.8.16 Reserved

6.8.17 Shared Use High Capacity Services

Shared use occurs when Special Access service and Switched Access Service are provided over the same High Capacity service through a common interface. The facility will be ordered, provisioned and rated at Switched Access (i.e., Entrance Facility, Direct Trunked Transport, as appropriate and Multiplexing, as appropriate, between the customer designated facilities and the Telephone Company SWC or Hub. When the customer chooses to use a portion of the available capacity for providing Special Access Service, then as each circuit is activated for Special Access Service, the Switched Access High Capacity Entrance Facility, Direct Trunked Transport, and multiplexer rates will be adjusted accordingly (e.g., for a VG capacity Special Access 1/24th of a DS1 service, 1/672nd of a DS3 or DSSSP service, etc.). Special Access Service rates and charges, as set forth in 7.5 following, will apply for each circuit of the shared use facility that is used to provide a Special Access Service when the original service is ordered as Switched Access.

In the case of DSOTS as specified in 6.8.25(C)(6) following, the monthly rate for the Switched Access DSOTS Service ring mileage, node and network optimization rates will be reduced accordingly based on the total channel capacity of the DSOTS ring and the monthly rate for the equivalent Special Access ring mileage, node, and network optimization rate elements will apply. The total channel capacity for an DSOTS ring is measured in terms of the total number of optical transport channels that can be transported over the ring.

6. Switched Access Service (Cont'd)

6.8 Rate Regulations (Cont'd)

6.8.17 Shared Use High Capacity Services (Cont'd)

The nonrecurring charge that applies when the shared use facility is installed will be the nonrecurring charge associated with the appropriate Switched Access Services. Switched Access Service rates and charges as set forth in 6.9 following, will apply for each circuit of the Shared Use Facility that is used to provide a Switched Access Service when the base service is ordered as Switched Access. The spare channels will be assigned to either Switched Access or Special Access for rating purposes depending on how the customer ordered the service: i.e., Switched Access or Special Access respectively.

The customer must place an order for each individual Switched or Special Access Service using the Shared Use Facilities and specify the circuit assignment for each service.

When Switched Access Service Direct Trunked Transport is provided using a circuit of the Shared Use Facility to a Hub, High Capacity rates and charges will apply for the facility from the customer designated premises to the Hub and individual service rates and charges will apply from the Hub to the Access Tandem or End Office. The rates and charges that will apply to the portion from the Hub to the Access Tandem of End Office will be dependent on the specific type of Switched Access Service that is provided (i.e., Voice Grade, or DS1). The rates and charges that will apply to the portion from the customer designated facilities to the Hub will be prorated based on the capacity of the Shared Use facility to the Hub. The applicable rates and charges will include Entrance Facility and Direct Trunked Transport rates and charges, if applicable, and multiplexing, if applicable. Rates and charges for optional features and functions associated with the service, if any, will apply for the appropriate circuit type.

Should the customer displace the entire capacity of the Switched Transport Service with Special Access Service, the Switched Transport Service will, for billing purposes, be considered disconnected [Any future capacity due to a customer's disconnect of Switched Access Service will be considered Telephone Company inventory]. Should the customer subsequently order Switched Transport Service, this will be treated as a new order and full rates and charges for the Switched Access Service type ordered, as set forth in 6.9 following will apply.

6. Switched Access Service (Cont'd)

6.8 Rate Regulations (Cont'd)

6.8.18 Host/Remote

Direct Trunk Transport (DTT) may be ordered to a host switch. DTT rates will apply to the host switch. For service to a remote switch, tandem fixed and per mile/per MOU rates will apply between the host and remote switches. No tandem switching will apply.

Tandem transport may also be ordered to a host switch. The transport will be measured as tandem fixed and per mile/per MOU from the tandem to the host. Tandem switching will apply. For service to a remote switch, a tandem fixed and per mile/per MOU charge will also apply from the host to the remote subtending the host.

FGA terminating will be measured from the Dial Tone Office to the host and the tandem fixed and per mile/per MOU charge will apply. If the call is made to the remote, another tandem fixed and per mile/per MOU charge will apply from the host to the remote subtending the host. Tandem switching will not apply.

A nonrecurring Remote Translation charge as specified in Section 6.9.1 following will apply for those customer requests which require a unique routing arrangement. This charge will apply per Remote Trunk Group, per occurrence.

Requests for service at remote offices will be accepted where the necessary space and technical capabilities exist.

6.8.19 Reserved

6.8.20 Shared Network Arrangement

Each customer entering into a Shared Network Arrangement is solely responsible to the Telephone Company for charges associated with that customer's portion of the shared network. Disconnection of service by the host subscriber does not relieve another user of the network of any obligation to pay access charges associated with the portion of the shared network to which that user subscribes. Billing for services and facilities will continue until a disconnect request from the service user has been received by the Telephone Company. The host subscriber is solely responsible for notifying the connecting service user in the event of disconnection of the host service which affects that portion of the shared network service to which the user has subscribed.

6. Switched Access Service (Cont'd)

6.8 Rate Regulations (Cont'd)

6.8.20 Shared Network Arrangement (Cont'd)

For administrative purposes, one "Arrangement" under the Shared Network Arrangement offering shall be limited to the agreement between one Host Subscriber and one Service User permitting the Service User to connect a specified number of subtending circuits to one specified multiplexer on the Host's service. Agreements between one Host Subscriber and two (or three, etc.) Service Users shall be deemed to comprise two (or three, etc. respectively) separate "Arrangements." However, an agreement to expand the scope of an existing Arrangement by subsequently increasing the number of subtending facilities on the same multiplexed shall not constitute a new or separate "Arrangement".

A Shared Network Arrangement shall be established between a Host Subscriber and a Service User upon the completion of the service order for the first arrangement. No Shared Network Arrangement shall be deemed to be in effect until at least one subtending facility has been installed for the Service User. A Shared Network Arrangement shall be deemed cancelled when the last subtending facility has been disconnected.

A Processing charge will apply for handling each service order in a Shared Network Arrangement. The Processing Charge is contained in Section 6, and applies in addition to all other applicable rates and charges.

6.8.21 Switched Access Signalling Service (SASS)

A SASS rate element will apply on a per call basis. The per call charge will be assessed to the TSP for each call that is passed to the TSP's network. The SASS is a chargeable option available with Feature Group D service, and all associated Switched Access Feature Group D charges as specified in Section 6.8.1(C) preceding and Section 6.9.2 following will apply.

6.8.22 Reserved

6.8.23 Reserved

6. Switched Access Service (Cont'd)

6.8 Rate Regulations (Cont'd)

6.8.24 Reserved

6.8.25 Dedicated SONET Services

(A) General

The Telephone Company's Dedicated SONET Services are a family of optional Switched Access high capacity services provided using SONET-based technology. Dedicated SONET Services include the following Switched Access services:

- Dedicated SONET Shared Assurance Network (DSSAN), as set forth in (C)(2) following
- Dedicated SONET Shared Single Path (DSSSP), as set forth in (C)(3) following
- Dedicated SONET Shared Dual Path (DSSDP), as set forth in (C)(4) following
- Dedicated SONET Optical Transport Services (DSOTS), as set forth in (C)(6) following
- Dedicated SONET Ring (DSR), as set forth in Section 23.1 following

Dedicated SONET services are designed to meet customer requirements for reliable and survivable networks.

Dedicated SONET services are provided on SONET facilities. There are no provisions within the SONET standard for asynchronous DS1 to DS3 multiplexing.

Technical specifications are delineated in the following Technical References:

GR-253-CORE, Issue 4
"Synchronous Optical Network (SONET) Transport Systems: Common Generic Criteria"

GR-1374-CORE, Issue 1
“SONET Inter-Carrier Interface Physical Layer Generic Criteria for Carriers”

ANSI T1.105-2000 (R2005)
"Synchronous Optical Network (SONET) - Basic Description including Multiplex Structure, Rates and Formats"

6. Switched Access Service (Cont'd)

6.8 Rate Regulations (Cont'd)

6.8.25 Dedicated SONET Services (Cont'd)

(B) Definitions

Add/Drop Multiplexing (ADM): a multiplexing function that allows lower level signals to be added or dropped from an optical carrier channel.

Customer Access Ring (CAR): a survivable fiber ring that is constructed through at least two Central Offices/Wire Centers. CARs utilize unidirectional path-switched ring ADMs, typically operating at OC3 and OC12 rates.

Fiber Path Diversity: the provision of service using at least two fibers placed on physically separate paths, i.e., different conduit runs that do not pass through the same manhole(s). The cable paths are separated by at least 25 feet.

Node: A DSR rate element and a designation of either a customer location or Telephone Company wire center on a SONET ring that has ADM capability. It is also the address of where a channelized (lower speed) service originates or terminates on a ring. Generally, the ring capacity determines the type of node.

Optical Carrier Rate (OC #): a SONET transmission signal/speed, line rate, or service. The rates are in multiples of an OC1, which is equivalent to an STS1 (51.84 Mbps), SONET's basic rate.

OC Rate	Bandwidth Capacity
3	155.52 Mbps
12	622.08 Mbps
48	2.488 Gbps
192	9.952 Gbps

Optical Carrier Rate Concatenated (OC#c): a "clear channel" SONET transmission using only one framing format. Generally, an OC3 signal provides three STS1 frame formats with 3 overheads for a total capacity of 2268 bytes per Synchronous Payload envelope (SPE) frame; in an OC3c signal, one STS3c frame format is used with one overhead, increasing the total payload capacity to 2340 bytes per SPE frame.

OC12/3 (OC12 over 3): a node designation that denotes a ring line rate of OC12, but with port interface capability and capacity equal to OC3. An OC12 DSR could have one, some or all OC12/3 nodes.

6. Switched Access Service (Cont'd)

6.8 Rate Regulations (Cont'd)

6.8.25 Dedicated SONET Services (Cont'd)

(B) Definitions (Cont'd)

OC12+3, OC48+3, OC192+3, OC192+12, and OC192+48: designations for nodes in ring-on-ring designs; the higher speed ADM is part of the true ring, and the lower speed ADM is connected for the purpose of mapping lower speed services onto the STS1s of the OC12, 48, or 192. Both nodes, the lower and higher speed node, of a ring-on-ring arrangement must be located in the same customer premises or wire center.

Port: a DSR rate element that denotes the interface at which a channelized or lower speed service terminates or originates at a DSR node.

SONET (Synchronous Optical NETwork): an international standard for the transmission of high capacity bandwidth over optical facilities. This synchronous transmission platform utilizes a modular multiplexing approach. Because of the large bandwidth, some of the payload is used to monitor, protect, manage and improve the transmission of the signal.

Dedicated SONET Shared Single Path (DSSSP): a 51.84 Mbps signal that is the electrical equivalent of the OC1 or a DS3 with additional Mbps devoted to SONET overhead information. A DSSSP can carry a DS3 or 28 DS1s when specifically formatted (Mapped). However, DS1s within a DS3 are not accessible within SONET and their performance cannot be guaranteed for this reason. These DS1s may be accessed off-ring using the tariffed DS3 to DS1 multiplexing optional service.

Transmuxing: the function of a DSR DS3 Transmux port that performs a DS3 to DS1 conversion at a DSR Enhanced Node. The DS3 to DS1 conversion allows a single DSR DS3 Transmux port (which includes a DS3 Transmux Facility to which the DS1 circuits are mapped) to be a facility associated with up to twenty-eight (28) VT1.5 mapped DSR DS1 ports. Such DS3 Transmux Facility will be provisioned upon ordering the associated DS1 Transmux port. Transmuxing within the DSR network retains DS1 visibility allowing for full, proactive maintenance capability of the DS1 signals.

Virtual Tributary (VT): A SONET structure designed for transport of sub-STS1 payloads. A DS1 is mapped into the SONET format using a VT1.5 as a packaging mechanism that is internal to the SONET signal.

6. Switched Access Service (Cont'd)

6.8 Rate Regulations (Cont'd)

6.8.25 Dedicated SONET Services (Cont'd)

(C) Service Descriptions

(1) Reserved

(2) Dedicated SONET Shared Assurance Network, DSSAN#

Dedicated SONET Shared Assurance Network, DSSAN, is a Switched Access offering that provides a LATA-wide network that maximizes fault tolerance and disaster recovery capabilities. The Telephone Company will ensure performance and reliability levels with 24-hour network surveillance.

DSSAN consists of transmission facilities that are ordered and provisioned from end to end. DSSAN service and billing components are entrance rings and transport channels.

The DSSAN entrance ring is provided at customer designated Points of Presence (POP). POPs are primary customer locations where traffic within the LATA is aggregated or from which traffic is distributed in the LATA. The DSSAN POP Entrance Ring is a high-speed SONET access ring with a minimum capacity of 12 STS1s. This dedicated, self-healing, diverse fiber path SONET ring will have at least 3 access points or nodes, the POP and two wire centers, a Serving Wire Center (SWC) and an alternate Wire Center. At the customer's option, an DSSAN POP Entrance Ring may include a fourth node, an additional POP node.

With DSSAN, the customer's traffic is transported across the Telephone Company's network from a POP entrance ring at the customer's primary point of presence (POP) to a secondary customer designated premises (a.k.a., end office or tandem office).

Effective December 4, 2007, orders for new DSSAN Entrance Rings or additional capacity for existing DSSAN Entrance Rings are no longer permitted. The Telephone Company will continue to provide DSSAN pursuant to this Section 6.8.25(C)(2) on any existing DSSAN that is in-service as of December 3, 2007, or any order for DSSAN that is placed with the Telephone Company prior to December 4, 2007 (collectively, Existing DSSAN), subject to the following conditions:

For any Existing DSSAN that is currently subscribed to a 5-year term plan or that is within a 60-day extension period immediately after expiration of a 5-year term plan, the Telephone Company will continue to provide the Existing DSSAN for an additional six (6) months beyond the expiration date of the customer’s current commitment period, or until the customer discontinues service, whichever comes first. Subject to availability of facilities and equipment, DSSAN Transport Channels may be added up to the total capacity of the Existing DSSAN Entrance Rings. Effective December 4, 2007, moves and rearrangements will no longer be permitted.

6. Switched Access Service (Cont'd)

6.8 Rate Regulations (Cont'd)

6.8.25 Dedicated SONET Services (Cont'd)

(C) Service Descriptions (Cont'd)

(2) Dedicated SONET Shared Assurance Network, DSSAN# (Cont'd)

On-net: that part of the network containing survivable service capability, i.e. provisioned over diverse fiber path SONET ring(s). On-net rate elements are provisioned over diverse fiber path SONET facilities end to end.

DSSAN is available only in those locations where SONET architecture is capable of providing specified levels of performance and reliability.

An illustration of DSSAN is shown below:

Dedicated SONET Shared Assurance Network (DSSAN)

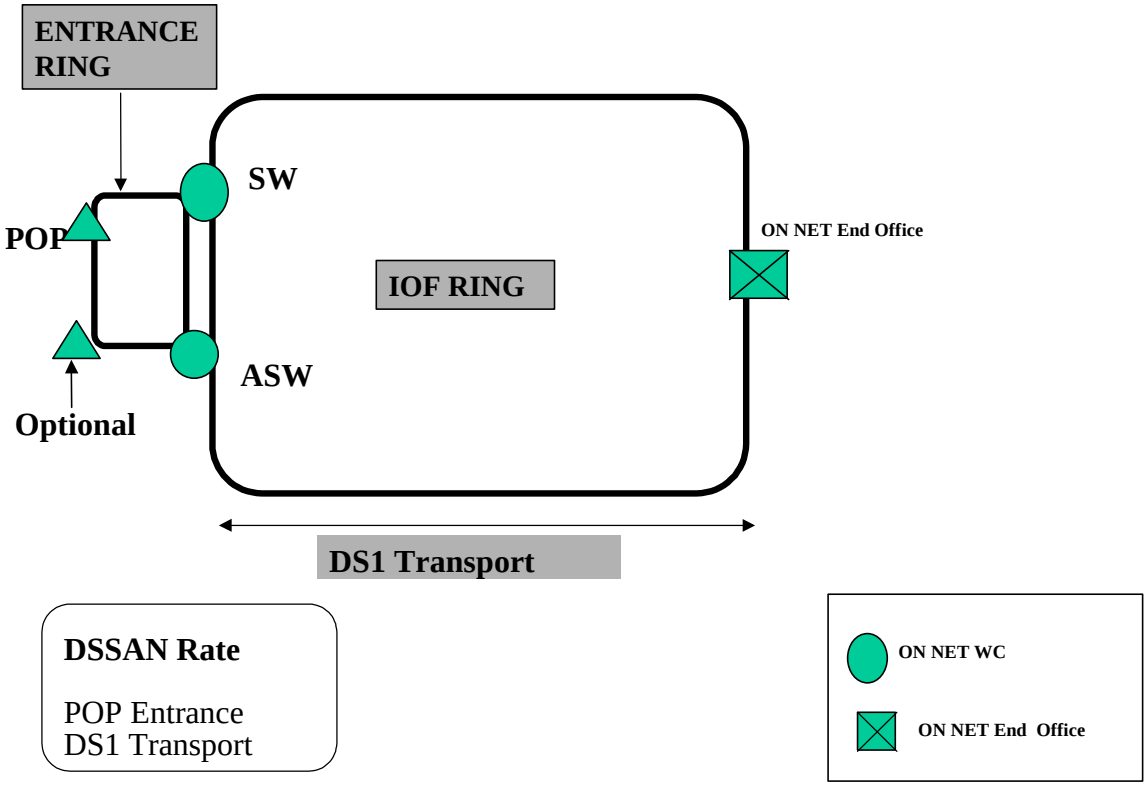

Service availability limited. Refer to # footnote on Page 6-200.

6. Switched Access Service (Cont'd)

6.8 Rate Regulations (Cont'd)

6.8.25 Dedicated SONET Services (Cont'd)

(C) Service Descriptions (Cont'd)

(2) Dedicated SONET Shared Assurance Network# (Cont'd)

(a) Terms and Conditions

DSSAN is a LATA wide service.

DSSAN requires a minimum service commitment of the greater of either 1) a minimum of 336 equivalent DS1 transport circuits within the LATA or 2) 90% of the customer's embedded base of high capacity access within the LATA. The minimum service commitment must be met within the first eighteen months of service, i.e., within the conversion period.

The 90% commitment level is for the total DS1 equivalency of all DS1 high capacity Switched Access circuits. The effective date of the customer's agreement letter with the Telephone Company will serve as the date the count is determined.

DSSAN is available for a minimum commitment period of 5 years. The contract date will be the date the first new DSSAN Transport Channel is installed or existing circuit is converted to DSSAN.

All DSSAN Transport Channels are provided with the same contract date regardless of when implemented and may be ordered and provisioned up to the contract date.

A customer's primary POP(s) must access the Telephone Company's network via DSSAN POP Entrance Ring(s) with OC12 network interfaces. The customer must purchase a minimum of 4 STS3s of POP Entrance Ring capacity.

Additional capacity at each POP Entrance Ring can be further supplemented in increments of one STS3 as needed.

Service availability limited. Refer to # footnote on Page 6-200.

6. Switched Access Service (Cont'd)

6.8 Rate Regulations (Cont'd)

6.8.25 Dedicated SONET Services (Cont'd)

(C) Service Descriptions (Cont'd)

(2) Dedicated SONET Shared Assurance Network# (Cont'd)

(a) Terms and Conditions

The Telephone Company will design and size entrance ring(s) and select the wire center nodes on entrance ring(s).

As an option, the customer may add a second POP to the DSSAN POP Entrance Ring. The second POP must be for restoral only.

Dual entrances at customer premises and Telephone Company wire centers are not considered a standard feature but may be provisioned in accordance with special construction tariffs and rates.

The available POP to End Office or Tandem interface combinations are:

POP	End Office or Tandem
OC12	DS1

The customer has responsibility of providing CFA (connecting facility assignment) at the POP.

The Telephone Company will manage the transport network between the customer's CFA at the POP wire center(s) and the secondary premises, thus eliminating the need for intermediate DS3 Hubs.

Service availability limited. Refer to # footnote on Page 6-200.

6. Switched Access Service (Cont'd)

6.8 Rate Regulations (Cont'd)

6.8.25 Dedicated SONET Services (Cont'd)

(C) Service Descriptions (Cont'd)

(2) Dedicated SONET Shared Assurance Network# (Cont'd)

(a) Terms and Conditions

DSSAN Transport Channels are available at two (2) levels of service, basic and premium.

Basic service provides automatic protection switching (APS) against fiber failures for the on-net portions of DS1 and higher capacity channels. On-net fiber path diversity provides fiber survivability with full redundancy from the customer's end office or tandem office to the POP (i.e., working and protect fiber path diversity).

Premium service provides APS against fiber failure and failure of intermediate electronics. Its dual path survivability provides near 100% fiber and Wire Center (intermediate electronics) survivability with full redundancy from the end office or tandem office to the POP.

The customer may add additional services (entrance ring capacity and transport channels) to DSSAN at any time up to and including the expiration date of the contract period.

The DSSAN contract period is for 5 years. Sixty days prior to contract expiration, the Telephone Company will notify the customer of pending expiration. If on the expiration date, the Telephone Company has not received any notice from the customer, the Telephone Company will continue to bill the customer at the current rate for the next sixty (60) days. The existing minimum commitment levels and termination liabilities will remain in effect for the 60-day extension period. If at the end of the sixty days, the Customer has not notified the Telephone Company to disconnect or renew service, the Customer's DSSAN service will automatically be renewed at the currently effective 5 year rate and new service commitment levels will be established as of the new contract date.

Service availability limited. Refer to # footnote on Page 6-200.

6. Switched Access Service (Cont'd)

6.8 Rate Regulations (Cont'd)

6.8.25 Dedicated SONET Services (Cont'd)

(C) Service Descriptions (Cont'd)

(2) Dedicated SONET Shared Assurance Network# (Cont'd)

(a) Terms and Conditions

Moves and rearrangements of services are subject to the same nonrecurring charges as a new installation.

DSSAN is provided with a one minute service guarantee; see Section 2.7.1(A)(2)(g)(i).

(b) Deployment and Availability

DSSAN is available based on negotiated intervals as described in Section 5.2.1(B) preceding.

DSSAN is only available where there is sufficient SONET technology in the network to meet the performance requirements for DSSAN service.

The Telephone Company is solely responsible for DSSAN deployment and design.

(c) Conversions

The DSSAN minimum service commitment as defined in (6.8.25(C)(2)(a)) must be met within an eighteen (18) month conversion period. The DSSAN conversion period begins on the date of receipt of the first DSSAN order following the completion of Inter-operability Testing (see 6.8.25(C)(2)(f)).

Conversion of existing Telephone Company Switched Access high capacity services to DSSAN is done without termination liability on the existing service(s). Any DSSAN nonrecurring charges will apply.

During the conversion process, embedded services are charged the existing rate until converted. Services converted are charged the DSSAN rates immediately.

Service availability limited. Refer to # footnote on Page 6-200.

6. Switched Access Service (Cont'd)

6.8 Rate Regulations (Cont'd)

6.8.25 Dedicated SONET Services (Cont'd)

(C) Service Descriptions (Cont'd)

(2) Dedicated SONET Shared Assurance Network# (Cont'd)

(d) Rate Regulations

Monthly recurring charges apply for the POP entrance rings and for the transport channels. Additional monthly charges apply for the two POP entrance ring option and for additional fiber mileage in the entrance ring.

- The POP Entrance Ring is rated per STS3 with a minimum of 4 STS3s and includes up to 10 air miles of fiber in the ring circumference. In addition, the rate includes low speed cards to be provisioned as needed.

  Entrance rings over 10 miles in circumference are billed an additional charge for each mile over 10 for each group of 16 STS3s (16 STS3s is the marker used to determine when to build another or new ring).

  The optional two POP entrance ring has the same rate structure as the standard one POP DSSAN entrance ring.

- The DSSAN Transport Channels are rated based on capacity and service level. The banded flat rate includes IOF mileage. The rate bands are mileage sensitive.

The two levels of service are basic and premium.

Nonrecurring charges are applicable for installations, rearrangements, and changes.

Service availability limited. Refer to # footnote on Page 6-200.

6. Switched Access Service (Cont'd)

6.8 Rate Regulations (Cont'd)

6.8.25 Dedicated SONET Services (Cont'd)

(C) Service Descriptions (Cont'd)

(2) Dedicated SONET Shared Assurance Network# (Cont'd)

(d) Rate Regulations (Cont'd)

Upon completion of conversion, the customer is subject to the following minimum monthly charges:

- the full monthly rate for the 90% commitment level of transport channels unless the actual count exceeds the commitment level; then the billing will be for the actual count or not less than 336 DS1 equivalent transport links. Any shortfall is rated as Basic On-net in the 0-3 Mile Band.

- 4 STS3s for each DSSAN POP entrance location.

(e) Termination Liability

During the conversion period, the customer may terminate its commitment for DSSAN service without termination liability if the total number of in-service DS1 equivalent transport services is less than one hundred (100).

In all other instances, DSSAN is subject to termination liabilities if the entire service is terminated or individual services are disconnected during the commitment period as follows.

Service availability limited. Refer to # footnote on Page 6-200.

6. Switched Access Service (Cont'd)

6.8 Rate Regulations (Cont'd)

6.8.25 Dedicated SONET Services (Cont'd)

(C) Service Descriptions (Cont'd)

(2) Dedicated SONET Shared Assurance Network# (Cont'd)

(e) Termination Liability (Cont'd)

During the conversion period, termination liability applies as follows:

- If the full DSSAN contract is terminated prior to the customer satisfying the minimum service commitment (i.e., 336 equivalent DS1s or the 90% commitment level, whichever is greater), the termination charge is 100% of the monthly rate for each Transport Channel that is in service as of the cancellation date and 100% of the monthly rate for the minimum 4 STS3s at the POP Entrance Ring for each month remaining in the conversion period; plus, a charge of 25% of the monthly rate for the minimum service commitment (Entrance ring and Transport Channels) for month nineteen (19) through the remainder of the 5 year service period. The monthly charge for the shortfall in Transport Channels will be assessed at the 0-3 Mile Band rate.

- If the contract is terminated and the minimum service commitments have been met, the termination liability is 100% of the monthly recurring charges for all of the transport channels and entrance ring STS3s in service on the cancellation date for the first 18 months plus 25% of the monthly charges for the remainder of the five year contract period.

- If individual DSSAN POP Entrance Ring STS3s or DSSAN Transport Channels are disconnected during the conversion period, no termination liability is assessed.

Service availability limited. Refer to # footnote on Page 6-200.

6. Switched Access Service (Cont'd)

6.8 Rate Regulations (Cont'd)

6.8.25 Dedicated SONET Services (Cont'd)

(C) Service Descriptions (Cont'd)

(2) Dedicated SONET Shared Assurance Network# (Cont'd)

(e) Termination Liability (Cont'd)

After conversion but prior to contract expiration, liability applies as follows:

- If the entire DSSAN contract is cancelled, the liability charge is 25% of the monthly rate for the minimum service commitments (i.e., 4 STS3s and the greater of either 336 equivalent DS1s or the 90% commitment level count for DS1s) for each month remaining in the contract period.

- If individual DSSAN POP Entrance Ring STS3s and DSSAN Transport Channels are disconnected after the conversion period but prior to contract expiration, no termination liability charges apply. The minimum monthly charge may apply.

The customer may reduce the 90% commitment count by paying termination liability on the amount of circuits by which it reduces the commitment count. However, the commitment level can never be reduced below 336 equivalent DS1s. Termination liability is described above.

Termination liability will be forgiven and the 90% commitment level will be reduced without penalty if the customer's reduction is due to the loss of a federal government contract (e.g., FTS 2001).

Service availability limited. Refer to # footnote on Page 6-200.

6. Switched Access Service (Cont'd)

6.8 Rate Regulations (Cont'd)

6.8.25 Dedicated SONET Services (Cont'd)

(C) Service Descriptions (Cont'd)

(2) Dedicated SONET Shared Assurance Network# (Cont'd)

(f) Initial Ordering Period

In the event that within 60 days of the installation of the first end to end DSSAN order, service does not meet transmission performance, protection switching and performance monitoring criteria referenced in this tariff (Technical Reference GR-253-CORE, Issue 4) either (1) the customer may cancel its request for DSSAN without termination liability; or (2) the Telephone Company will inform the customer that its request for DSSAN can not be satisfied, in which case no termination liability would be applicable.

Service availability limited. Refer to # footnote on Page 6-200.

6. Switched Access Service (Cont'd)

6.8 Rate Regulations (Cont'd)

6.8.25 Dedicated SONET Services (Cont'd)

(C) Service Descriptions (Cont'd)

(3) DSSSP Service

(a) General Description

DSSSP, Dedicated SONET Shared Single Path, is an STS1 (Synchronous Transport Signal Level 1) channel for the SONET transmission of 51.84 Mbps of data. The signal consists of overhead and a Synchronous Payload Envelope (SPE). The overhead portion of the signal is used for controlling, framing and maintaining the signal. The SPE contains the customer information.

DSSSP is provisioned over the Company's shared SONET network using an ADM operating in a ring mode and diversely routed fiber between the SWC and the customer's premises. DSSSP channel service may be hubbed to an STS1/DS1 multiplexer.

DSSSP Entrance Facility is provided an STS1 interface. The network channel interfaces define the bit rates that are available. Network Channel interfaces and codes are described below:

Interface	Codes
STS1	O4ST6.A

DSSSP service is transported through the IOF (Interoffice facilities) as STS1 with VT1.5 mapping.

Rates are specified in 6.9.1(S) following.

(b) Optional Features and Functions

DSSSP service can be multiplexed. DS1s mapped as VT1.5s within an DSSSP can be multiplexed with the required optional feature of STS1/DS1 multiplexing.

6. Switched Access Service (Cont'd)

6.8 Rate Regulations (Cont'd)

6.8.25 Dedicated SONET Services (Cont'd)

(C) Service Descriptions (Cont'd)

(3) DSSSP Service (Cont'd)

(c) Terms and Conditions

DSSSP is available on a month-to-month basis.

The minimum service period for DSSSP is twelve months.

DSSSP services are provided where SONET facilities are available with sufficient bandwidth capacity to meet the customer's request.

Customers who order a Switched Access DSSSP must map the signal as VT1.5 (see definitions for Virtual Tributary and SONET in Section 6.8.25(B) preceding).

DSSSP entrance facilities, channel mileage and optional features are subject to the guarantees set forth in Section 2.7.1(A)(2)(i) preceding for service interruptions.

6. Switched Access Service (Cont'd)

6.8 Rate Regulations (Cont'd)

6.8.25 Dedicated SONET Services (Cont'd)

(C) Service Descriptions (Cont'd)

(3) DSSSP Service (Cont'd)

(d) Termination Liability

DSSSP service may be cancelled without termination liability when cancellation of the DSSSP service occurs within thirty (30) days of the effective date of a Telephone Company initiated rate increase of eight percent (8%) or more on the customer's recurring rates. Additionally, any existing DSSSP customer that experienced an increase in its recurring rates for service between June 1, 1999 to January 11, 2000 may also exercise this option. The customer must notify the Telephone Company of its intent to exercise this option by February 10, 2000.

6. Switched Access Service (Cont'd)

6.8 Rate Regulations (Cont'd)

6.8.25 Dedicated SONET Services (Cont'd)

(C) Service Descriptions (Cont'd)

(3) DSSSP Service (Cont'd)

(d) Termination Liability (Cont'd)

Termination liability does not apply when the service is changed to a higher bandwidth SONET service.

Termination charges are calculated as follows:

- If the disconnect occurs during the first year of service, termination liability is calculated at 100% of the monthly charges for the unexpired portion of the first year, and at 15% of the monthly charges for the remainder of the term plan.

- If the disconnect occurs after the first year of service, no termination liability applies.

6. Switched Access Service (Cont'd)

6.8 Rate Regulations (Cont'd)

6.8.25 Dedicated SONET Services (Cont'd)

(C) Service Descriptions (Cont'd)

(3) DSSSP Service (Cont'd)

(e) Rate Regulations

DSSSP service rate elements are Entrance Facility, Direct Trunked Transport and STS1/DS1 Multiplexing.

The Entrance Facility rate element provides for the communications path between a customer designated premises and the SWC (serving wire center) of that premises. Included, as part of the Entrance Facility is a standard interface. Switched DSSSP transport is provided with an STS1 interface.

The Direct Trunked Transport rate element provides transport between SWCs and through the IOF. The rates and charges for DSSSP include channel mileage, which consist of a Fixed rate and a rate Per Mile. The manner in which the Direct Trunked Transport rate element is measured and applied is in accordance with the regulations set forth in Section 6.8.13 preceding.

The STS1/DS1 Multiplexing rate element applies when the optional feature of STS1 to DS1 Multiplexing is ordered.

The rates and charges for any other Switched Access service connected to DSSSP are subject to the rates and charges for the specific service being provided.

Nonrecurring charges apply for the installation of each Entrance Facility and for the installation of STS1/DS1 Multiplexing.

Rates are specified in 6.9.1(S), following.

6. Switched Access Service (Cont'd)

6.8 Rate Regulations (Cont'd)

6.8.25 Dedicated SONET Services (Cont'd)

(C) Service Descriptions (Cont'd)

(4) Dedicated SONET Shared Dual Path

Dedicated SONET Shared Dual Path, DSSDP, is an optional feature that provides High Capacity Switched Access customers with a fully diverse and redundant transmission path through another wire center as a standby facility should there be a wire center fault at the customer's serving wire center (SWC), or should there be a cable cut between the customer's premises and the serving wire center or between wire centers.

DSSDP may terminate at a Hub where the underlying service may be multiplexed to higher or lower speed services. These rates are listed in Section 6.9.1(T) following.

DSSDP will provide a Switched Access High Capacity customer a near-100% protected connection from point-to-hub when the designated premises and Telephone Company wire center hub are on the same or interconnected SONET rings.

(a) Terms and Conditions

Dedicated SONET Shared Dual Path will only be available as an end-to-hub service between a customer premises and a Telephone Company wire center hub located where the Telephone Company has multi-wire center SONET-based fiber rings deployed in its local loop and IOF, Inter-Office Facilities.

DSSDP may also be provided on a portion of the circuit path of an end-to-hub service, in cases where full SONET facilities do not exist or are not required.

DSSDP service at the customer premises will consist of a fiber ring routed through at least two wire centers, one of which is the customer's SWC. Interoffice rings connecting multiple wire centers will provide transport between a customer's premises ring and their wire center hub.

6. Switched Access Service (Cont'd)

6.8 Rate Regulations (Cont'd)

6.8.25 Dedicated SONET Services (Cont'd)

(C) Service Descriptions (Cont'd)

(4) Dedicated SONET Shared Dual Path (Cont'd)

(a) Terms and Conditions (Cont'd)

DSSDP service intervals are negotiated as described in 5.2.1(B) preceding.

When STS1 signals are transmitted, the customer must specify how the signal is mapped, VT 1.5 or DS3-mapped (see definition of Virtual Tributary in 6.8.25(B) preceding).

Extended Superframe Format (ESF) is required on all DS1 services in order to ensure performance objectives.

The Company will determine the other wire center(s) included in provisioning DSSDP.

The Company will determine the type (e.g., bidirectional) of self-healing ring that will be utilized and the path of the primary and secondary signals within interconnected rings.

Standby mileage for DSSDP is the same as the per mile measurement for the main or underlying service.

The customer will be billed additional charges for any charges levied the Telephone Company for space and power required for the ADMs on the Telephone Company's side of the network interface.

6. Switched Access Service (Cont'd)

6.8 Rate Regulations (Cont'd)

6.8.25 Dedicated SONET Services (Cont'd)

(C) Service Descriptions (Cont'd)

(4) Dedicated SONET Shared Dual Path (Cont'd)

(b) Rates and Charges

The rates for Dedicated SONET Shared Dual Path as specified in 6.9.1(T) apply per point of termination and are in addition to the Entrance Facility and Direct Trunk Transport rates and charges for the underlying High Capacity service(s). In addition to the DSSDP Standby Entrance Facility and Standby Mileage recurring charges, one-time nonrecurring charges also apply for each Entrance Facility. See below:

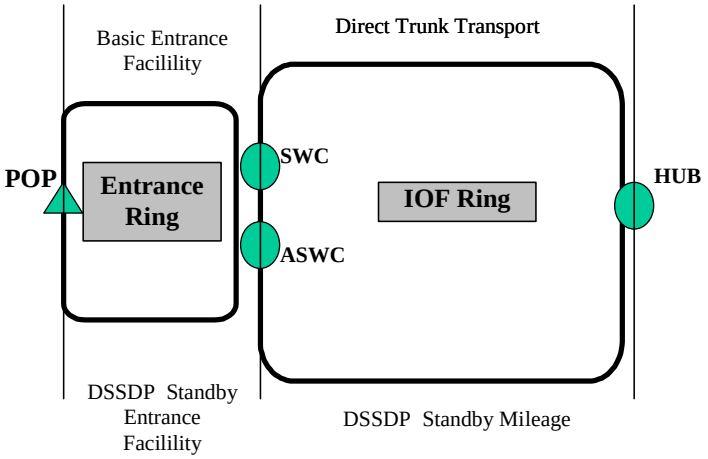

6. Switched Access Service (Cont'd)

6.8 Rate Regulations (Cont'd)

6.8.25 Dedicated SONET Services (Cont'd)

(C) Service Descriptions (Cont'd)

(5) Reserved

(6) Dedicated SONET Optical Transport Service (DSOTS)#

(a) General

Dedicated SONET Optical Transport Service (DSOTS) provides managed optical transport of multiple protocols that are transmitted over a single fiber optic pair. DSOTS is configured in a diversely routed ring architecture or topology. The ring architecture allows for point-to-point optical services of varying wavelengths to be multiplexed on or off of the ring.

DSOTS allows for the native transmission of multiple high-speed protocols of various wavelengths over a single customized network. The wavelengths are arranged in a channelized format such that the protocol transmitted over each channel is independent of every other channel on the DSOTS ring. The customer must specify, by channel, the interface that defines the transmission speed and protocol being transmitted over the associated wavelength.

Effective February 15, 2007, orders for new DSOTS rings (including both partial and full rings) are no longer permitted. The Telephone Company will continue to provide DSOTS pursuant to this Section 6.8.25(C)(6) on any existing DSOTS that is in-service as of February 15, 2007, or any order for DSOTS that is placed with the Telephone Company prior to February 14, 2007 (collectively, Existing DSOTS), subject to the following conditions:

a. For any Existing DSOTS that is currently subscribed to a term plan (i.e., commitment periods of 3-, 5-, and 7-years), the Telephone Company will continue to provide the Existing DSOTS for an additional six (6) months beyond the expiration date of the customer's current commitment period, or until the customer discontinues service, whichever comes first. Subject to availability of facilities and equipment, certain moves, additions and/or changes to the Existing DSOTS are permitted provided that such moves, additions and/or changes do not require a new commitment period or an extension to an existing commitment period.

b. For any Existing DSOTS whose term plan expired prior to February 15, 2007, but the Existing DSOTS continued on a month-to-month basis at prevailing rates, the Telephone Company will continue to provide the Existing DSOTS until August 16, 2007, or until customer discontinues service, whichever comes first. Moves, additions, and/or changes are not permitted.

6. Switched Access Service (Cont'd)

6.8 Rate Regulations (Cont'd)

6.8.25 Dedicated SONET Services (Cont'd)

(C) Service Descriptions (Cont'd)

(6) Dedicated SONET Optical Transport Service (DSOTS)# (Cont'd)

(b) Terms and Conditions

DSOTS provides connectivity to multiple customer designated locations (nodes). However, a DSOTS ring must have a minimum of three nodes at different locations or two nodes at different locations with a network optimization mid-span amplifier. At least one of the devices (node or amplifier) must be located in a Company Central Office (CO) and one must be located at a customer's designated premises.

The DSOTS ring is comprised of managed nodes, ring mileage, network optimization (amplification) and optical transport channels. These elements are described in (c) following and are provided at the rates set forth in Section 6.9.1(U) following.

The customer will be billed additional charges for any charges levied the Telephone Company for space and power required to place nodes on the Company's side of the network interface.

Connection of DSR to a DSOTS ring is provided over an equal speed, unprotected optical transport channel (e.g. a 155.52 Mbps unprotected channel would connect to an OC3 DSR node). Each node on the DSR ring must be located at the same customer designated premises or in the same Telephone Company wire center as its corresponding DSOTS node. All other applicable DSR regulations as set forth in Section 23.1 following apply to the derived DSR Service.

Connection of Dedicated SONET Broadband Transport (DSBT) to a DSOTS ring is provided over an equal speed, OC3 or OC12 protected optical transport channel as described in Section 7.2.14(C)(4)(c)(4) following.

Service availability limited. Refer to # footnote on Page 6-219.

6. Switched Access Service (Cont'd)

6.8 Rate Regulations (Cont'd)

6.8.25 Dedicated SONET Services (Cont'd)

(C) Service Descriptions (Cont'd)

(6) Dedicated SONET Optical Transport Service (DSOTS)# (Cont'd)

(b) Terms and Conditions (Cont'd)

A DSOTS ring may also be connected to a Telephone Company provided dedicated SONET ring or Telephone Company provided point-to-point SONET service, provided that such connections are technically and operationally feasible, as determined by the Telephone Company.

The customer is responsible to ensure that its equipment meets any applicable technical requirements or limitations for the protocol being transmitted over the optical transport channels.

The Telephone Company is responsible for the overall design and configuration of the DSOTS ring. Construction of the ring will not begin until such design and configuration are mutually agreeable to both the customer and the Telephone Company.

Credit for service interruption of DSOTS is set forth in Section 2.7.1(A)(2)(l) preceding.

The technical specifications for DSOTS are delineated in Technical References GR-2918-CORE, Issue 6; GR-2979-CORE, Issue 5, GR-1312-CORE, Issue 3; ITU G.959.1; and ITU G.692. Technical specifications for the underlying protocols transmitted over the DSOTS ring are specified in (c)(4) following.

Service availability limited. Refer to # footnote on Page 6-219.

6. Switched Access Service (Cont'd)

6.8 Rate Regulations (Cont'd)

6.8.25 Dedicated SONET Services (Cont'd)

(C) Service Descriptions (Cont'd)

(6) Dedicated SONET Optical Transport Service (DSOTS)# (Cont'd)

(c) Service Components

(1) Nodes are Dense Wave Division Multiplexing (DWDM) devices located at customer designated premises or Telephone Company wire centers from which optical transport channels are multiplexed on or off of the DSOTS ring. The type of node that is deployed at each location is determined by the number of optical transport channels that will be multiplexed on or off of the DSOTS ring at that location.

4 Channel Node
Placement of a 4 channel node at a location enables up to 4 protected optical transport channels to be deployed. Each protected optical channel may be replaced by two unprotected optical channels up to a maximum of 8 possible channels on the node. A 4 channel node may be utilized as the primary node at a location or as an expansion node to expand the capacity of a 16 channel primary node. 4 channel nodes are subject to the availability of suitable facilities and equipment to provide such device. No more than one 4 channel node will be provided at a location.

16 Channel Node
Placement of a 16 channel primary node at a location enables up to 16 protected optical transport channels to be deployed. Each protected optical channel may be replaced by two unprotected optical channels up to a maximum of 32 possible channels on the primary node.

The capacity of a 16 channel node may be increased through the addition of an expansion node at the same location. A 4 channel expansion node enables up to 20 protected optical transport channels (i.e., 16 on the

Service availability limited. Refer to # footnote on Page 6-219.

6. Switched Access Service (Cont'd)

6.8 Rate Regulations (Cont'd)

6.8.25 Dedicated SONET Services (Cont'd)

(C) Service Descriptions (Cont'd)

(6) Dedicated SONET Optical Transport Service (DSOTS)# (Cont'd)

(c) Service Components (Cont'd)

(1) (Cont'd)

primary node and 4 on the expansion node) to be deployed at a single location. Each protected optical channel may be replaced by two unprotected optical channels up to a maximum of 40 possible channels at that location. A 16-channel expansion node enables up to 32 protected optical transport channels (i.e., 16 on the primary node and 16 on the expansion node) to be deployed at a single location. Each protected optical channel may be replaced by two unprotected optical channels up to a maximum of 64 possible channels at that location.

The maximum number of optical transport channels that can be deployed at a single location is dependent upon the specific configuration of the DSOTS ring and the type of optical transport channels being deployed from that location.

(2) DSOTS Ring Mileage is the total of airline distances between devices (nodes and amplifiers) rounded up to the nearest mile. The mileage rate is based on total ring capacity and not on individual services between devices. For example, the mileage charge for a five device ring with two mid-span amplifiers and a distance of 4.3 miles between each device (21.5 total miles) would be calculated by multiplying the mileage rate in Section 6.9.1(U) following by 22 miles. The mileage between devices (e.g., an initial node and an expansion node or an At-Node amplifier, as applicable) located at the same customer designated premises or Telephone Company wire center is zero. This mileage calculation applies regardless of the number of services on the ring.

Service availability limited. Refer to # footnote on Page 6-219.

6. Switched Access Service (Cont'd)

6.8 Rate Regulations (Cont'd)

6.8.25 Dedicated SONET Services (Cont'd)

(C) Service Descriptions (Cont'd)

(6) Dedicated SONET Optical Transport Service (DSOTS)# (Cont'd)

(c) Service Components (Cont'd)

(3) Network Optimization provides for amplification of the signal to ensure acceptable optical levels. When required, amplification is performed at the node (primary node or expansion node) or in a Telephone Company wire center when mid-span amplification of the signal is required between nodes. Node amplification occurs in one or two directions (East to West and/or West to East). Amplification in two directions requires the use of two at-node amplifiers. Mid-span amplification occurs simultaneously in both directions (East to West and West to East). The Telephone Company shall have sole responsibility in determining when amplification is required and the quantity and type of amplification necessary to maintain acceptable optical levels.

(4) Optical transport channels allow for optical services to be multiplexed on to or off of the DSOTS ring at locations equipped with a DSOTS node. An optical interface at the node allows for connection of the applicable protocol to the customer's equipment. Optical transport channels are provided on a point-to-point basis and are available on a protected or unprotected basis depending on the protocol being transmitted and the level of redundancy required for the optical channel. Some protocols have facility distance limitations and may affect the design or availability of the DSOTS ring or its optical transport channels.

A protected optical channel allows for a single signal from the customer to be duplicated and sent over separate diverse routes (working and protect) within the DSOTS network. Protected optical transport channels are provided as described in Section 7.2.14(C)(4)(c)(4) following.

Service availability limited. Refer to # footnote on Page 6-219.

6. Switched Access Service (Cont'd)

6.8 Rate Regulations (Cont'd)

6.8.25 Dedicated SONET Services (Cont'd)

(C) Service Descriptions (Cont'd)

(6) Dedicated SONET Optical Transport Service (DSOTS)# (Cont'd)

(c) Service Components (Cont'd)

(4) (Cont'd)

An unprotected optical channel provides minimum protection of the signal from the customer. End-to-end protection is provided by the protection inherent in the connecting service provided by the Telephone Company (e.g., DSR), as applicable.

The Telephone Company will transmit the following protocols over DSOTS optical transport channels:

- Unprotected SONET OC3 – for transmission of 155.52 Mbps synchronous optical data transmission.

- Unprotected SONET OC12 – for transmission of 622.08 Mbps synchronous optical data transmission.

- Unprotected SONET OC48 – for transmission of 2.488 Gbps synchronous optical data transmission.

- Unprotected SONET OC192 – for transmission of 9.953 Gbps synchronous optical data transmission.

The technical specifications for SONET protocols are delineated in technical publication GR-253-CORE, Issue 4.

Service availability limited. Refer to # footnote on Page 6-219.

6. Switched Access Service (Cont'd)

6.8 Rate Regulations (Cont'd)

6.8.25 Dedicated SONET Services (Cont'd)

(C) Service Descriptions (Cont'd)

(6) Dedicated SONET Optical Transport Service (DSOTS)# (Cont'd)

(c) Service Components (Cont'd)

(5) An example of a Dedicated SONET Optical Transport Service Ring is diagrammed below:

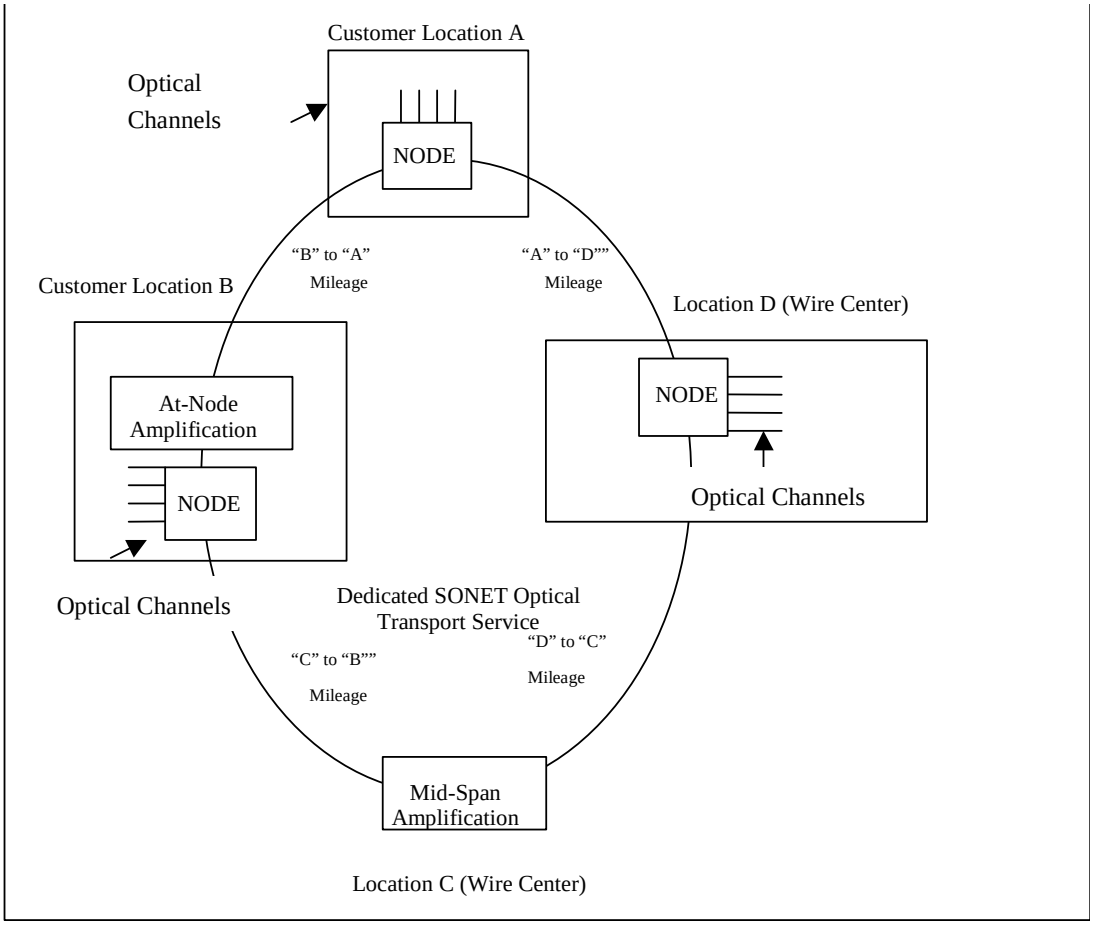

Service availability limited. Refer to # footnote on Page 6-219.

6. Switched Access Service (Cont'd)

6.8 Rate Regulations (Cont'd)

6.8.25 Dedicated SONET Services (Cont'd)

(C) Service Descriptions (Cont'd)

(6) Dedicated SONET Optical Transport Service (DSOTS)# (Cont'd)

(d) Application of Rates and Charges

(1) DSOTS is available for 3, 5 and 7 year commitment periods for the nodes, ring mileage, network optimization at-node amplification (subject to (C)(6)(d)(8) following), network optimization mid-span amplification, and optical transport channels.

(2) Nodes, network optimization mid-span amplification, and SONET optical transport channels added subsequent to the initial installation may be coterminous to the expiration date of the DSOTS at the rates and charges specified for the term plan on the existing DSOTS or may require an extension to the existing plan as follows. If the addition is prior to the 21st month for an existing 3-year plan, prior to the 36th month for an existing 5-year plan, or prior to the 50th month for an existing 7-year plan, the addition will be coterminous to the expiration date of the DSOTS. If the addition is after the aforementioned periods, the customer must extend the commitment period of its existing plan for an additional one-year for a 3-year plan, an additional 2-years for a 5-year plan, or an additional 3-years for a 7-year plan. Termination liability for DSBT is described in Section 8.2(C) following. Termination liability for DSR is set forth in Section 23.1 following.

(3) Effective August 16, 2005, separate rates and charges for network optimization at-node amplification apply subject to (C)(6)(d)(8) following.

Service availability limited. Refer to # footnote on Page 6-219.

6. Switched Access Service (Cont'd)

6.8 Rate Regulations (Cont'd)

6.8.25 Dedicated SONET Services (Cont'd)

(C) Service Descriptions (Cont'd)

(6) Dedicated SONET Optical Transport Service (DSOTS)# (Cont'd)

(d) Application of Rates and Charges (Cont'd)

(4) Data optical transport channels added subsequent to the initial installation will be coterminous to the expiration date of the DSOTS at the rates and charges specified for the term plan on the existing DSOTS. These channels are subject to a minimum service period of three months. Data optical transport channels are available in Section 7.2.14(C)(4) following.

(5) The addition of SONET and/or Data optical transport channels subsequent to the initial installation of service may also require the addition of an expansion node(s) and/or network optimization device(s) to accommodate the increase in channels. The addition of an expansion node or network optimization is subject to the conditions set forth above.

(6) Monthly recurring rates apply for the nodes, ring mileage, network optimization mid-span amplification, network optimization at-node amplification subject to (C)(6)(d)(8) following, and optical transport channels. The monthly rate for an optical transport channel applies for the entire point-to-point connection. Once a term period expires, the prevailing rates of the current plan will continue at Category I or Category II rates, as determined in (C)(6)(d)(8) following, until the customer cancels service or requests a new term plan.

(7) Nonrecurring charges for DSOTS apply for the initial installation of service and for any subsequent node, network optimization mid-span amplification or optical transport channel that is added at any time after the initial installation of service. A nonrecurring charge also applies to upgrade a 4 channel primary node to a 16 channel primary node or a 4 channel expansion node to a 16 channel expansion node.

Service availability limited. Refer to # footnote on Page 6-219.

6. Switched Access Service (Cont'd)

6.8 Rate Regulations (Cont'd)

6.8.25 Dedicated SONET Services (Cont'd)

(C) Service Descriptions (Cont'd)

(6) Dedicated SONET Optical Transport Service (DSOTS)# (Cont'd)

(d) Application of Rates and Charges (Cont'd)

(8) Rates and charges for DSOTS nodes, ring mileage, network optimization at-node amplification, network optimization mid-span amplification, and optical transport channels which are in-service as of, or ordered prior to, August 16, 2005 are subject to Category I rates, unless the customer has converted to Category II rates under (C)(6)(d)(8)(c) following.

Rates and charges for DSOTS nodes, ring mileage, network optimization mid-span amplification, and optical transport channels which are ordered on or after August 16, 2005 are subject to Category II rates. Category II rates also apply to DSOTS which are converted from Category I under (C)(6)(d)(8)(c) following.

(a) Category I rates are grandfathered as of August 16, 2005 and apply to each of the following (i) DSOTS that is in-service as of, or ordered prior to, August 16, 2005 under this Section 6.8.25 or under Section 7.2.14(C)(4) following, or (ii) each DSOTS subscribed under Contract Tariff Option 5, 6, 11 or 13 as set forth in Section 21 following, which is in effect as of August 16, 2005; unless in each case above, the customer elects to convert DSOTS billing to Category II rates in accordance with (C)(6)(d)(8)(c) following. Category I rates are subject to separate rates and charges for network optimization at-node amplification.

Service availability limited. Refer to # footnote on Page 6-219.

6. Switched Access Service (Cont'd)

6.8 Rate Regulations (Cont'd)

6.8.25 Dedicated SONET Services (Cont'd)

(C) Service Descriptions (Cont'd)

(6) Dedicated SONET Optical Transport Service (DSOTS)# (Cont'd)

(d) Application of Rates and Charges (Cont'd)

(8) (Cont'd)

(b) Category II rates apply to each DSOTS which is ordered on or after August 16, 2005 under this Section 6.8.25 or under Section 7.2.14(C)(4) following. Category II rates also apply to nodes, network optimization, mileage, and optical transport channels which are ordered on or after August 16, 2005 as an addition to an existing DSOTS, regardless of whether or not such existing DSOTS is subject to Category I or Category II rates. When the Telephone Company's network design for such addition to an existing DSOTS requires that a network optimization at-node amplifier be added to an existing node that is billed at Category I rates, the billing for such node will be converted to the Category II node rate element, which node rate element includes amplification at the node.

Category II rates also apply to DSOTS that are converted from Category I rates to Category II rates in accordance with (C)(6)(d)(8)(c) following. Category II rates do not include separate rates and charges for network optimization at-node amplification which is provided as part of the node rate element on or after August 16, 2005.

Service availability limited. Refer to # footnote on Page 6-219.

6. Switched Access Service (Cont'd)

6.8 Rate Regulations (Cont'd)

6.8.25 Dedicated SONET Services (Cont'd)

(C) Service Descriptions (Cont'd)

(6) Dedicated SONET Optical Transport Service (DSOTS)# (Cont'd)

(d) Application of Rates and Charges (Cont'd)

(8) (Cont'd)

(c) A customer subject to Category I rates under (C)(6)(d)(8)(a) preceding may convert to Category II rates subject to the following:

(1) The customer must submit an access order for the conversion to Category II.

(2) Separate rates and charges applicable to network optimization at-node amplification under Category I rates shall cease coincident with the date that billing commences at Category II rates.

(3) A new commitment period commences with the conversion from Category I rates to Category II rates. The customer must select a new commitment period from those offered under (d)(1) preceding. The new commitment period must be equal to, or longer than, the original commitment period for the DSOTS that was subject to the Category I rates. For example, a DSOTS under a 5-year commitment period at Category I rates may only convert to a new 5-year commitment period or a new 7-year commitment period upon conversion to Category II rates.

Service availability limited. Refer to # footnote on Page 6-219.

6. Switched Access Service (Cont'd)

6.8 Rate Regulations (Cont'd)

6.8.25 Dedicated SONET Services (Cont'd)

(C) Service Descriptions (Cont'd)

(6) Dedicated SONET Optical Transport Service (DSOTS)# (Cont'd)

(d) Application of Rates and Charges (Cont'd)

(8) (Cont'd)

(c) (Cont'd)

(4) There can be no physical work activity (e.g., moves, additions, changes) associated with the conversion to Category II rates. Upon conversion, all terms and conditions of this tariff shall apply to the converted DSOTS service, including any applicable termination liability and minimum period obligations.

(5) When the conversion is ordered during the period beginning August 16, 2005 and ending November 16, 2005, the conversion will not be subject to minimum period and/or termination liability as they may otherwise apply for early termination of the Category I term plan, provided that the conditions set forth in (1) through (4) preceding are met.

(6) Conversion from Category I rates to Category II rates that is ordered after November 16, 2005 is subject to all minimum period and/or termination liability as they apply for early termination of the Category I term plan. Additionally, conversion to Category II rates ordered after November 16, 2005 is subject to the requirements set forth in (1) through (4) preceding.

Service availability limited. Refer to # footnote on Page 6-219.

6. Switched Access Service (Cont'd)

6.8 Rate Regulations (Cont'd)

6.8.25 Dedicated SONET Services (Cont'd)

(C) Service Descriptions (Cont'd)

(6) Dedicated SONET Optical Transport Service (DSOTS)# (Cont'd)

(d) Application of Rates and Charges (Cont'd)

(8) (Cont'd)

(c) (Cont'd)

(7) Reserved

(8) Reserved

(9) A change in the type (e.g., Fiber Channel to FICON) or optical carrier rate (e.g., OC3 to OC12) of optical transport channel is treated as a discontinuance of the existing channel and an installation of a new optical transport channel. Optical transport channels ordered on or after August 16, 2005 are provided at Category II rates.

(10) When an optical transport channel is ordered to connect with DSR, the optical channel will be billed to the DSR customer.

(11) When an optical transport channel is ordered to connect to a Telephone Company provided dedicated SONET ring, the optical channel will be billed to the dedicated SONET ring customer.

Service availability limited. Refer to # footnote on Page 6-219.

6. Switched Access Service (Cont'd)

6.8 Rate Regulations (Cont'd)

6.8.25 Dedicated SONET Services (Cont'd)

(C) Service Descriptions (Cont'd)

(6) Dedicated SONET Optical Transport Service (DSOTS)# (Cont'd)

(e) Termination Liability

(1) Termination liability applies to DSOTS and is charged per rate element on all nodes, network optimization and SONET optical transport channels. Termination liability for DSBT is described in Section 8.2(C) following. Termination liability for DSR is set forth in Section 23.1 following. Data optical transport channels as set forth in Section 7.2.14(C)(4) following are not subject to termination liability, however, such channels are subject to a minimum service period of three-months.

(2) DSOTS may be canceled without termination liability when cancellation of the DSOTS occurs within thirty (30) days of the effective date of a Telephone Company initiated rate increase of eight percent (8%) or more on any rate applicable to DSOTS service.

(3) Termination liability will not apply (1) if a customer changes its term plan to a longer commitment period; (2) if a 4 channel primary node is upgraded to a 16 channel primary node; (3) if a 4 channel expansion node is upgraded to a 16 channel expansion node; or (4) if a term plan subject to Category I rates is converted to a new term plan subject to Category II rates, when such conversion satisfies the conditions in (C)(6)(d)(8)(c) preceding and is ordered on or before November 16, 2005.

Service availability limited. Refer to # footnote on Page 6-219.

6. Switched Access Service (Cont'd)

6.8 Rate Regulations (Cont'd)

6.8.25 Dedicated SONET Services (Cont'd)

(C) Service Descriptions (Cont'd)

(6) Dedicated SONET Optical Transport Service (DSOTS)# (Cont'd)

(e) Termination Liability (Cont'd)

(4) Termination liability will apply when the conditions above are not met and the customer cancels service prior to expiration of the plan period. If the cancellation occurs within the first two years of a term plan, termination liability is equal to 100 percent (100%) of the monthly charges for the unexpired portion of the first two years, and 25 percent (25%) of the monthly charges for the remainder of the plan. If the customer cancels after the first two years of service, then termination liability is equal to 25 percent (25%) of the monthly charges for the remaining life of the term.

(5) For Dedicated SONET Optical Transport Service with a commitment period which was extended under (i) following, termination liability is calculated as the difference between the monthly rates for the highest Term Pricing Plan commitment period that could have been satisfied prior to disconnection of the service or cancellation of the plan and the monthly rates already paid for the expired commitment period and the extended commitment period for the period of time the service was in effect.

Service availability limited. Refer to # footnote on Page 6-219.

6. Switched Access Service (Cont'd)

6.8 Rate Regulations (Cont'd)

6.8.25 Dedicated SONET Services (Cont'd)

(C) Service Descriptions (Cont'd)

(6) Dedicated SONET Optical Transport Service (DSOTS)# (Cont'd)

(f) Conversions

(1) Customers who wish to move or convert existing Switched Access DSR or High Capacity Switched Access entrance facilities to DSOTS may do so without conversion charges (termination liability and installation charges) as long as the total capacity of Switched Access entrance facilities or DSR purchased by the customer does not decrease.

(2) Customers who wish to convert existing DSOTS under a term plan with Category I rates to a new term plan with Category II rates may do so without conversion charges (minimum period obligations, termination liability, and installation charges) as long as the requirements set forth in (C)(6)(d)(8)(c) preceding are met and is ordered on or before November 16, 2005.

(g) Deployment and Availability

Since DSOTS is a dedicated high capacity customized network, it is deployed upon customer request. Where suitable facilities are not generally available, rates and charges as set forth in Interstate Special Construction Tariffs may apply.

DSOTS is available based on negotiated intervals as described in 5.2.1(B) preceding.

(h) Shared Use

The regulations applicable to the shared use of DSOTS are set forth in Section 6.8.17 preceding. Special Access DSOTS is described in Section 7.2.14(C)(4) following.

Service availability limited. Refer to # footnote on Page 6-219.

6. Switched Access Service (Cont'd)

6.8 Rate Regulations (Cont'd)

6.8.25 Dedicated SONET Services (Cont'd)

(C) Service Descriptions (Cont'd)

(6) Dedicated SONET Optical Transport Service (DSOTS)# (Cont'd)

(i) Extension of a Commitment Period

(1) The customer has the option, within sixty (60) days prior to the expiration date for its commitment period, to extend its expiring Term Pricing Plan to a plan with a longer commitment period, for which time-in-service credit will be allowed for the expiring plan. The commitment period selected for the extended plan must be longer that the commitment period of the expiring plan as follows:

- An expiring 3-Year Term may be extended to either a 5-Year or 7-Year Term Plan.
- An expiring 5-Year Term may be extended to a 7-Year Term Plan.

(2) Time-in-service credit on the expiring plan will be granted and applied towards the new extended plan. For example, an expiring 3-Year term plan will allow for 3 years of time-in-service credit towards the extended plan.

(3) A Category I term plan that is converted under (C)(6)(d)(8)(c) preceding to a Category II term plan is not eligible for time-in-service credit on the Category II term plan.

(4) The rate for the longer commitment period will apply effective with the first bill day following expiration of the commitment period for the existing plan and continue through the remainder of the commitment period associated with the extended plan. No adjustment for the increased discount associated with the extended plan will be made to the monthly rates already billed on the expiring plan.

Service availability limited. Refer to # footnote on Page 6-219.

6. Switched Access Service (Cont'd)

6.8 Rate Regulations (Cont'd)

6.8.25 Dedicated SONET Services (Cont'd)

(C) Service Descriptions (Cont'd)

(6) Dedicated SONET Optical Transport Service (DSOTS)# (Cont'd)

(i) Extension of a Commitment Period (Cont'd)

(5) The customer may also extend the commitment period in order to install additional nodes, network optimization devices or SONET optical channels as described in (C)(6)(d) preceding.

(6) Extension of a term pricing plan subject to Category I rates will be extended at Category I rates. However, nodes, network optimization, ring mileage, and optical transport channels added during the period of extension are subject to Category II rates unless otherwise specified.

(7) Extension of a term pricing plan under Category II rates will be extended at Category II rates.

(j) Channel Interface Codes

The following channel interface code is used for the DSOTS ring:

CI
02FMF.4

The following channel interface codes are used for channels using wavelengths on the DSOTS ring:

CI
02FCF.15 (SONET OC3)
02FCF.62 (SONET OC12)
02FCF.25 (SONET OC48)

Service availability limited. Refer to # footnote on Page 6-219.

6. Switched Access Service (Cont'd)

6.8 Rate Regulations (Cont'd)

6.8.26 Facilities Management Service#

Effective May 1, 2009, requests for new FMS plans are no longer accepted. The Telephone Company will continue to provide service pursuant to this Section 6.8.26 on any existing FMS plans for only those ACNAs and LATAs where such FMS plans are in service as of April 30, 2009 (Existing FMS), subject to the following conditions:

a. The Telephone Company will provide Existing FMS until the expiration date of the customer's current term plan commitment, including any applicable extension period provided under (c) following, at which time Existing FMS shall be converted as specified in Section (b) following. Individual circuits may be added, changed or disconnected throughout the current commitment period, including any applicable extension period provided under (c) following. For any customer, including any affiliates, with Existing FMS under multiple term plans with different expiration dates (for different LATAs), the customer may either (i) continue with the existing expiration dates or (ii) select one of the expiration dates to be applicable to all of the Existing FMS term plans. The customer must provide the Telephone Company with written notification of its choice by no later than July 15, 2009.

b. Customers who wish to convert Existing FMS to standard Telephone Company provided Switched Access Service, shall specify, at least three (3) months prior to the expiration date of the Existing FMS commitment period, any then effective Month-to-Month, discount or term plan available for Switched Access Service in this tariff, to be effective upon expiration of the commitment period or extension, as applicable. In the alternative: customers may take no action, and upon expiration of the Existing FMS commitment period or extension, as applicable, the Telephone Company will convert the Existing FMS to Switched Access Service provided under the Month-to-Month, discount or term plan applicable to the secondary premises of the circuit, with any remaining FMS without billable rate elements under FMS converted to Switched Access Service provided on a Month-to-Month basis.

c. For customers who wish to convert Existing FMS to standard Telephone Company provided Switched Access Service as specified in Section (b) preceding, the Telephone Company will provide up to twelve (12) additional months under any Existing FMS plan for network optimization provided the customer sends written notification, setting forth how many additional months they want for an extension, to the Telephone Company by not later than three (3) months prior to the expiration date of the Existing FMS plan commitment period. The customer may request service rearrangements and/or coordinated reterminations during such extension. In accordance with Section 6.8.26(D)(14), Service Rearrangement nonrecurring charges and Coordinated Retermination nonrecurring charges for Existing FMS will not apply during the requested extension. Existing FMS term plan monthly rates will apply to all circuits until the conversion of Existing FMS to standard Telephone Company provided Switched Access Service is complete.

6. Switched Access Service (Cont'd)

6.8 Rate Regulations (Cont'd)

6.8.26 Facilities Management Service# (Cont'd)

(A) General

Facilities Management Service (FMS) is a service option that provides for Telephone Company management of engineering and design of a customer's switched access network from the customer's designated "primary premises" location(s) to end offices and/or tandem access switching offices within the same LATA. With FMS, the Telephone Company assumes responsibility for the routing of the customer's dedicated circuits over the Telephone Company's Switched Access Network in order to maximize network efficiencies and to optimize economic efficiencies.

(B) Definitions

Entrance Facility: the facilities between a customer's network interface at its primary premises and its Serving Wire Center.

DS0 Equivalency: a DS0 channel is the basic building block for high capacity digital services.

8,064 DSOs = 1 STS12
2,016 DSOs = 1 STS3
672 DSOs = 1 DS3 or 1 STS1
24 DSOs = 1 DS1
1 DSO = 1 trunk

Network Interface: the interface point at a customer's premises where connection is made between the FMS network and the customer's network. FMS network interfaces are DS1, DS3 optical and electrical, and STS1, OC3, OC12 and OC48.

Service availability limited. Refer to # footnote on Page 6-239.

6. Switched Access Service (Cont'd)

6.8 Rate Regulations (Cont'd)

6.8.26 Facilities Management Service# (Cont'd)

(B) Definitions (Cont'd)

Primary Premises: A location designated by the customer where an FMS circuit/channel/trunk is originated; only one end of the circuit can be designated a primary premises. Additionally, a primary premises must meet the criteria for one of the following two types described below:

Type 1: a location with an entrance facility of a minimum of 672 switched and/or special access working DS0 equivalent channel terminations and a DS3, STS1, OC3, OC12, or OC48 network interface, or one with Collocated Interconnection DS3 Cross-connect Service and a DS3 network interface.

Type 2: a location with Collocated Interconnection DS1 Cross-connect Service and a DS1 network interface, or one with an entrance facility of a minimum of 144 switched and/or special access working DS0 equivalent channels and a DS1 network interface.

Note: When customers subscribe to both switched and special access FMS, the DS0 equivalent minimums of 672 for a DS3 interface or 144 for a DS1 interface can be comprised of any mix of working switched and/or special access channel terminations.

(C) Service Description

With FMS, Feature Groups A, B, and D switched access services are provided to the customer over discrete channels. The Telephone Company does engineering of the service from the entrance facility of the customer's primary premises to the end offices and/or tandem access switching offices over its Switched Access Network. The channel routing may not be designated by the customer as it is for most Telephone Company regular Switched Access High Capacity Services (see Section 5.2 preceding).

Facilities Management Service is an alternative to the customer's self-management of its network of standard switched access services, and will therefore be rated discretely (see Section 6.9.10 following).

Service availability limited. Refer to # footnote on Page 6-239.

6. Switched Access Service (Cont'd)

6.8 Rate Regulations (Cont'd)

6.8.26 Facilities Management Service# (Cont'd)

(C) Service Description (Cont'd)

(1) FMS is available in all LATAs, and is provided on a LATA basis.

(2) FMS is provided on a month-to-month basis or, at the option of the customer, under a three-year term plan or a five-year term plan (term plans are not available for customers in West Virginia). The minimum period for FMS when provided on a month-to-month basis is one year. The minimum billing for individual channels within the FMS network is one month.

(3) FMS is available to any customer that meets the following minimum requirements:

(a) The customer must have at least one primary premises as defined in 6.8.26(B) preceding within the LATA.

(b) All of a customer's primary premises and the associated Feature Group A, B, and D services must be included in the FMS plan for that LATA.

(c) All Primary Premises in the plan must be of the same type (type 1 or 2).

(D) Terms and Conditions

The following terms and conditions apply to FMS:

(1) The customer will designate in the initial FMS order: the LATA, type of primary premises, and the term period. Only one FMS commitment period or plan is allowed per LATA. If the customer purchases both switched and special access FMS in the LATA, both plans must have the common commitment period and expiration date.

(2) The customer must maintain a minimum of one primary premises for the entire plan term.

Service availability limited. Refer to # footnote on Page 6-239.

6. Switched Access Service (Cont'd)

6.8 Rate Regulations (Cont'd)

6.8.26 Facilities Management Service# (Cont'd)

(D) Terms and Conditions (Cont'd)

(3) When a FMS Term Plan is selected, the customer must maintain an annual minimum of 90% of the initial commitment of DS0 equivalent service for the duration of the term plan.

(a) The Telephone Company will annually, on the anniversary date of the term plan, calculate the average quantity of DS0 equivalent services for the previous 12 months.

(b) When the annual average number of services falls below the commitment level, the customer has the following options:

(i) Buy down the commitment level by paying termination liability, as assessed in 6.8.26(F), on the shortfall between the commitment level and the previous 12 month average. The monthly charge for the discontinued portion of the service is equal to the number of services below the commitment level multiplied by the customer's average DS0 rate based on the previous 12 months of billing.

or

(ii) Retain the original commitment level and pay 12 months of charges for the DS0 equivalent shortfall using the customer's average DS0 rate based on the previous 12 months billing.

(c) If the FMS Term Plans in multiple LATAs share a common expiration date and the same type of Primary Premises, the associated commitment level will be aggregated to a single total. Fulfillment of the commitment level will be determined as stated in 6.8.26(D)(3)(a) preceding; however, the calculation will be on the aggregate level for all eligible LATAs.

(4) The customer will provide a DS1, DS3 or STS1 electrical, a DS3 optical, or an OC3, OC12, or an OC48 optical network interface at each primary premises.

Service availability limited. Refer to # footnote on Page 6-239.

6. Switched Access Service (Cont'd)

6.8 Rate Regulations (Cont'd)

6.8.26 Facilities Management Service# (Cont'd)

(D) Terms and Conditions (Cont'd)

(5) The FMS customer, when ordering Feature Group A, B, or D services, will specify the type of service and will indicate the starting point or primary premises and the location of the end office and/or tandem access switching office.

(6) (RESERVED)

(7) The Company will provide the same service intervals and quality standards for services in an FMS plan as for the standard switched access services.

(8) FMS is not applicable to the following services and service options:

(a) Reconfigure Service on DS1
(b) services in other rate plans such as Term Pricing, Federal Communications Access Services or Rate Stability plans.
(c) central office multiplexing, e.g., voice to telegraph, DS1 to DS0, DS0 to subrates.
(d) Automatic Loop Transfer
(e) Transfer Arrangement
(f) Metallic, Telegraph, WATS, Wideband Analog, Wideband Digital, Program Audio, Video and Lightwave Special Access Services
(g) Secondary Premises or End User Channel Terminations
(h) Shared Network Arrangement (Exception: see (9) following).
(i) Dedicated SONET Ring (DSR), Dedicated SONET Shared Assurance Network (DSSAN), and Dedicated SONET Shared Single Path (DSSSP)
(j) Dedicated SONET Broadband Transport (DSBT)

Service availability limited. Refer to # footnote on Page 6-239.

6. Switched Access Service (Cont'd)

6.8 Rate Regulations (Cont'd)

6.8.26 Facilities Management Service# (Cont'd)

(D) Terms and Conditions (Cont'd)

(9) Since Shared Network Arrangements (SNAs) are not allowed under FMS, a FMS customer whose network contains SNAs must choose one of the 2 options following:

(a) SNA Transition Period

The customer is allowed a transition period of one year, beginning with the effective date of the FMS application for service, in which to convert embedded base Shared Network Arrangements (SNAs). No new SNAs will be established once an FMS application for service becomes effective.

The embedded base of SNA services will not be included in the DSO calculation to determine the customer's FMS Rate Band for billing of Primary Premises channels. However, these SNA services will be billed at the FMS rates as identified for the other standard FMS circuits.

The customer must remove all SNAs from its account prior to the end of the one-year transition period. The Company will notify the customer 60 days prior to the end of the transition period of any SNA services that remain on the customer's account. Failure to eliminate the SNAs will result in termination of service with termination liability charges.

(b) Virtual SNA Billing Option

The Virtual SNA Billing Option provides a billing solution so the customer may avoid the expense of physically moving these shared circuit arrangements onto separate circuit facilities. The Virtual SNA Billing option will produce a bill for the embedded SNAs that closely approximates the recurring monthly charges the customer would incur if the SNAs were converted to physically separate non-FMS facilities.

Service availability limited. Refer to # footnote on Page 6-239.

6. Switched Access Service (Cont'd)

6.8 Rate Regulations (Cont'd)

6.8.26 Facilities Management Service# (Cont'd)

(D) Terms and Conditions (Cont'd)

(9) (Cont'd)

(b) Virtual SNA Billing Option (Cont'd)

If the customer selects this option, the Telephone Company will first produce an inventory of SNA circuits that are terminating at each of the customer's point of termination locations. Second, the Telephone Company will develop a count of DS3 channel terminations or Collocated Cross-Connects and 3/1 multiplexers that would be required at each point of termination to serve these SNA circuits. The Telephone Company then will price these facilities by using five-year term rates specified in Section 6.9.10 following. The result of this pricing exercise will be a replication of access facility charges that the customer would incur if a separate network were to be established specifically to serve these SNA circuits.

The charges developed from the process described above will be billed monthly for a period of one year. Sixty (60) days prior to the end of this billing period, a new inventory will be conducted that will result in new Virtual SNA Billing Option charge to be billed through the next year of the customer's FMS term plan. This process will continue until the FMS plan is terminated, or until the customer physically removes the SNA circuits from FMS facilities.

(10) FMS pricing is applicable to entrance facilities or Collocated Interconnection Cross-Connect Service and SPOT Bay Frame and Terminations, which are described in Section 19 following, at the primary premises and the associated direct trunk transport mileage, multiplexing, installation and maintenance services. (See Section 19 for further information.)

The FMS recurring monthly rates consist of the following rate elements:

Service availability limited. Refer to # footnote on Page 6-239.

6. Switched Access Service (Cont'd)

6.8 Rate Regulations (Cont'd)

6.8.26 Facilities Management Service# (Cont'd)

(D) Terms and Conditions (Cont'd)

(10) (Cont'd)

(a) Primary Premises Entrance Facilities

The DS0 equivalent channel termination will cover primary premises entrance facilities, including the interface.

The DS0 channels at a DS3 network interface are available in rate bands of DS3 equivalency. DS0 channels at a DS1 entrance facility are available on a per DS0 basis after the initial minimum is met.

(b) Primary Premises Cross-Connect

The cross-connect will cover primary premises entrance facilities. Both Physical and Virtual Collocated Cross-Connect Service and Physical Collocated SPOT Bay Frame and Terminations are available. For DS3 Primary Premises Cross-Connects, a minimum order of 672 is required. For DS1 Primary Premises Cross-Connects, a minimum of 144 DS0s is required.

(c) Channel Mileage

Channel mileage for FMS is measured as if each circuit is provisioned on a point-to-point basis to either the end office or the tandem access office location and is rated in one of two ways.

Basic channel mileage applies when the direct trunk transport facility terminated at the end office or the tandem access switching office location is less than DS3 *or STS1*. Direct channel mileage rates apply when any combination of DS3 and STS# interfaces exists at both ends of a facility between the primary premises and the end office and/or tandem access switching office location.

Both fixed and per-mile mileage rate elements apply at DS0 equivalency for either rating method.

Service availability limited. Refer to # footnote on Page 6-239.

6. Switched Access Service (Cont'd)

6.8 Rate Regulations (Cont'd)

6.8.26 Facilities Management Service# (Cont'd)

(D) Terms and Conditions (Cont'd)

(10) (Cont'd)

(d) Multiplexing

Multiplexing is charged on a DS0 equivalency basis. Both DS3/DS1 and DS1/DS0 equivalent multiplexing are available. (Exception: no DS1/DS0 multiplexing charges will apply when the trunks terminate in a digital end office or tandem access switching office.) DS3/STS1 to DS1 multiplexing is applicable to all DS0 equivalent channels that terminate to a Primary Premises and meet Type 1 criteria as described in Section (B) preceding.

(e) Administration Fee

This charge covers network administration and is assessed per DS0 equivalent channel.

(11) The only nonrecurring charges applicable to FMS plan services are those special construction charges that may be applicable with building of entrance facilities and changes in network interfaces.

(12) When a customer converts to a FMS Term Plan, termination liability for a service under another plan is forgiven. Additionally, "Time-In Service Credits" (TISCs) will be given for any Rate Stability Payment Plan (RSPP) or Term Pricing Plan (TPP) with a 2-year or greater commitment period converted to FMS. TISCs can be used to buy down termination liability.

(a) One TISC is given for each month per DS0 equivalent channel provisioned on the former RSPP service. Maximum allowable time-in service credit cannot exceed 60 months for any converted RSPP or TPP. For example, at FMS conversion, a customer with a DS3C 3-year RSPP that has been in service for the past 30 months with 1968 of the 2016 available channels provisioned will be assigned 59,040 TISCs.

(b) One TISC can be used to offset or buy down 1 month of termination liability per equivalent DS0.

Service availability limited. Refer to # footnote on Page 6-239.

6. Switched Access Service (Cont'd)

6.8 Rate Regulations (Cont'd)

6.8.26 Facilities Management Service# (Cont'd)

(D) Terms and Conditions (Cont'd)

(12) (Cont'd)

(c) Twelve (12) TISCs can be used to offset one FMS channel service below the minimum commitment level for a year.

(13) The FMS customer must notify the Company in writing no later than three months prior to a desired change in service regarding renewal, discontinuance, or conversion.

(a) When the customer opts to renew for either a 3 or 5 year term plan, the commitment level of the renewed plan will be equal to the number of DS0 equivalent services that are actually in service as of the date of renewal.

(b) When a notice of discontinuance is received three months prior to expiration date, the Company, upon request, will work with the customer to design a dedicated switched access network to support the customer's traffic.

Standard switched access rates (basic or term) will apply when the channel services are converted. FMS rates will apply to that portion that is not converted until network reconfiguration is complete.

(c) When notice is not received within three months of expiration date, the expiring FMS Term Plan will be renewed. The commitment level of the renewed plan will be equal to the number of DS0 equivalent services that are actually in service as of the date of renewal. The renewed plan will also have a commitment period equal to that of the expiring plan and the plan will be considered new. The renewed plan will be effective no later than the second bill period following the date of renewal. Billing based on the expiring plan and the expiring commitment level will continue until the renewed plan is in effect. If, within the first 60 days of the date of renewal, the customer elects to cancel the renewed plan, discontinue the FMS Term Plan or convert its FMS Services to standard Switched Access Services, termination liability will not apply to make such a change.

Service availability limited. Refer to # footnote on Page 6-239.

6. Switched Access Service (Cont'd)

6.8 Rate Regulations (Cont'd)

6.8.26 Facilities Management Service# (Cont'd)

(D) Terms and Conditions (Cont'd)

(14) When the customer elects to discontinue FMS and to establish a new network arrangement, no nonrecurring charges will apply except for the following:

(a) Installation nonrecurring charges will apply for the establishment of any new entrance facilities and multiplexers.

(b) Nonrecurring charges will apply for the addition of any new optional feature or function.

(E) FMS Term Plan Termination Without Liability

(1) Termination liability does not apply when cancellation of an FMS term plan occurs within thirty (30) days of the effective date of a Telephone Company initiated rate increase that is greater than eight percent on any rate applicable to FMS.

(2) Termination liability will not apply when the plan is cancelled or converted within the first sixty (60) days following renewal of the plan under (D)(13)(c) preceding.

(3) A request to change to a longer FMS commitment period will nullify the current termination liability. Termination liability associated with the new plan will apply.

(4) Termination liability will not be charged if a customer changes from a FMS Term Plan, in its entirety, to another Telephone Company term plan as long as all of the following requirements are met:

(a) FMS has been in service for a minimum of 12 months.

(b) The quantity of DS0 equivalent channel terminations in the new plan is equal to, or greater than, 90% of the existing FMS primary premises channel terminations or 90% of the original commitment level of FMS primary premises channel terminations, whichever is greater.

(c) The commitment period for the new term plan is of equal or greater length than the time remaining in the FMS plan period.

Service availability limited. Refer to # footnote on Page 6-239.

6. Switched Access Service (Cont'd)

6.8 Rate Regulations (Cont'd)

6.8.26 Facilities Management Service# (Cont'd)

(F) FMS Term Plan Termination Liability

(1) Termination liability is applicable when FMS is discontinued prior to the end of the selected plan period, except as set forth in 6.8.26(E) preceding.

(2) Termination liability will be computed as follows:

(a) If discontinued within the first year, the customer will be liable for 100% of the total monthly FMS charges for the unexpired portion of the initial 12 months, plus 20% of the total monthly charges for the unexpired portion of the commitment plan period in excess of 12 months.

(b) If service is discontinued after the first 12 months of a plan period but prior to the end of the selected plan period, the termination liability is equal to 20% of the total monthly charges for the unexpired portion of the plan period.

(c) The total monthly FMS charges used to calculate the termination liability would be equal to the total FMS monthly recurring charges billable on the date of discontinuance.

Service availability limited. Refer to # footnote on Page 6-239.

6. Switched Access Service (Cont'd)

6.9 Rates and Charges

6.9.1 Switched Transport

(A) Entrance Facilities

	Monthly Rates	Nonrecurring Charges First	Nonrecurring Charges Additional
(1) Voice Grade			
- Per Point of Termination			
Two-wire			
Rate Zone1	$14.00		
Rate Zone 2	14.00		
Rate Zone 3	14.00		
Price Band 4	28.70		
Price Band 5	28.70		
Price Band 6	28.70		
Four-wire			
Rate Zone 1	26.02		
Rate Zone 2	26.02		
Rate Zone 3	26.02		
Price Band 4	53.00		
Price Band 5	53.00		
Price Band 6	53.00		
-Per Point of Termination			
Two-wire			
Installation/Change			
Rate Zone 1		$1.00	$1.00
Rate Zone 2		1.00	1.00
Rate Zone 3		1.00	1.00
Price Band 4		1.00	1.00
Price Band 5		1.00	1.00
Price Band 6		1.00	1.00
Rearrangement			
Rate Zone 1		.90	.60
Rate Zone 2		.90	.60
Rate Zone 3		.90	.60

6. Switched Access Service (Cont'd)

6.9 Rates and Charges (Cont'd)

6.9.1 Switched Transport (Cont'd)

(A) Entrance Facilities (Cont'd)

	Monthly Rates	Nonrecurring Charges	
		First	Additional
(1) Voice Grade (Cont'd)			
- Per Point of Termination			
Four-wire Installation/Change			
Rate Zone 1		$1.00	$.75
Rate Zone 2		1.00	.75
Rate Zone 3		1.00	.75
Price Band 4		1.00	.75
Price Band 5		1.00	.75
Price Band 6		1.00	.75
Rearrangement			
Rate Zone 1		.90	.60
Rate Zone 2		.90	.60
Rate Zone 3		.90	.60

6. Switched Access Service (Cont'd)

6.9 Rates and Charges (Cont'd)

6.9.1 Switched Transport (Cont'd)

(A) Entrance Facilities (Cont'd)

	Monthly Rates	Nonrecurring Charges First	Nonrecurring Charges Additional
(2) DS1			
-Per Point of Termination			
Rate Zone 1		$190.00	
Rate Zone 2		190.00	
Rate Zone 3		190.00	
Price Band 4		190.00	
Price Band 5		190.00	
Price Band 6		190.00	
Installation/Change			
Rate Zone 1		355.00	220.00
Rate Zone 2		355.00	220.00
Rate Zone 3		355.00	220.00
Price Band 4		355.00	220.00
Price Band 5		355.00	220.00
Price Band 6		355.00	220.00
Rearrangement			
Rate Zone 1		.90	.60
Rate Zone 2		.90	.60
Rate Zone 3		.90	.60

6. Switched Access Service (Cont'd)

6.9 Rates and Charges (Cont'd)

6.9.1 Switched Transport (Cont'd)

(A) Entrance Facilities (Cont'd)

(3) DS3

-Per Point of Termination

(a) Electrical Interface

Per CT	Monthly Rate	Nonrecurring Charge
Rate Zone 1	$2,100.00	$1.00
Rate Zone 2	2,100.00	1.00
Rate Zone 3	2,100.00	1.00
Price Band 4	2,100.00	1.00
Price Band 5	2,100.00	1.00
Price Band 6	2,100.00	1.00

(b) Optical Interface

Per CT	Monthly Rate	Nonrecurring Charge
Rate Zone 1	$2,100.00	$1.00
Rate Zone 2	2,100.00	1.00
Rate Zone 3	2,100.00	1.00
Price Band 4	2,100.00	1.00
Price Band 5	2,100.00	1.00
Price Band 6	2,100.00	1.00

6. Switched Access Service (Cont'd)

6.9 Rates and Charges (Cont'd)

6.9.1 Switched Transport (Cont'd)

(B) Tandem Switched Transport

	Monthly Rates	Usage Rate Fixed	Usage Rate Per Mile
Tandem Transport			
Rate Zone 1		$.000000	$.000002
Rate Zone 2		.000000	.000002
Rate Zone 3		.000000	.000002
Tandem Switching			
- per MOU			
Rate Zone 1	$.001684		
Rate Zone 2	.001684		
Rate Zone 3	.001684		
- Dedicated Tandem Trunk Port Charge			
- per Trunk	12.50		
- Host/Remote-Fixed-Per MOU	0.000000		
- Host/Remote-Per Mile-Per MOU	0.000000		
Transport Multiplexing (DS3 to DS1)			
- Per MOU	0.000000		

6. Switched Access Service (Cont'd)

6.9 Rates and Charges (Cont'd)

6.9.1 Switched Transport (Cont'd)

(C) Direct Trunked Transport

	Monthly Rates	
	Fixed	Per Mile
(1) Voice Grade		
Rate Zone 1	$10.00	$2.00
Rate Zone 2	10.00	$2.00
Rate Zone 3	10.00	$2.00
Price Band 4	20.44	$4.00
Price Band 5	20.44	$4.00
Price Band 6	20.44	$4.00
(2) DS1		
Rate Zone 1	80.00	22.00
Rate Zone 2	80.00	22.00
Rate Zone 3	80.00	22.00
Price Band 4	80.00	22.00
Price Band 5	80.00	22.00
Price Band 6	80.00	22.00
(3) DS3 (Month-to-Month)		
- Electrical		
Rate Zone 1	$825.00	$161.25
Rate Zone 2	825.00	161.25
Rate Zone 3	825.00	161.25
Price Band 4	825.00	161.25
Price Band 5	825.00	161.25
Price Band 6	825.00	161.25
- Optical		
Rate Zone 1	825.00	161.25
Rate Zone 2	825.00	161.25
Rate Zone 3	825.00	161.25
Price Band 4	825.00	161.25
Price Band 5	825.00	161.25
Price Band 6	825.00	161.25

6. Switched Access Service (Cont'd)

6.9 Rates and Charges (Cont'd)

6.9.1 Switched Transport (Cont'd)

(D) Multiplexing

	Monthly Rates	Nonrecurring Charges
Entrance Facility, per arrangement		
DS1 to Voice Grade		
Rate Zone 1	$210.00	
Rate Zone 2	210.00	
Rate Zone 3	210.00	
Price Band 4	210.00	
Price Band 5	210.00	
Price Band 6	210.00	
DS3 to DS1		
Rate Zone 1	775.00	$1.00
Rate Zone 2	775.00	1.00
Rate Zone 3	775.00	1.00
Price Band 4	775.00	1.00
Price Band 5	775.00	1.00
Price Band 6	775.00	1.00
Direct Trunked Transport, per arrangement		
DS1 to Voice Grade		
Rate Zone 1	$210.00	
Rate Zone 2	210.00	
Rate Zone 3	210.00	
Price Band 4	210.00	
Price Band 5	210.00	
Price Band 6	210.00	
DS3 to DS1		
Rate Zone 1	775.00	$1.00
Rate Zone 2	775.00	1.00
Rate Zone 3	775.00	1.00
Price Band 4	775.00	1.00
Price Band 5	775.00	1.00
Price Band 6	775.00	1.00

6. Switched Access Service (Cont'd)

6.9 Rates and Charges (Cont'd)

6.9.1 Switched Transport (Cont'd)

	Monthly Rates	Nonrecurring Charges
(E) Alternate Serving Wire Center		
DS1		
- per point of termination		
Rate Zone 1	$ 25.00	
Rate Zone 2	25.00	
Rate Zone 3	25.00	
DS3		
(Optical or Electrical)		
- per point of termination		
Rate Zone 1	250.00	
Rate Zone 2	250.00	
Rate Zone 3	250.00	
(F) Diversity		
- per circuit		
Rate Zone 1	5.00	
Rate Zone 2	5.00	
Rate Zone 3	5.00	
(G) Switched Access Connection Charge		
- per Line or trunk		
Initial		
Rate Zone 1		$1.00
Rate Zone 2		1.00
Rate Zone 3		1.00
Additional		
Rate Zone 1		1.00
Rate Zone 2		1.00
Rate Zone 3		1.00

6. Switched Access Service (Cont'd)

6.9 Rates and Charges (Cont'd)

6.9.1 Switched Transport (Cont'd)

		Nonrecurring Charges
(H)	Shared Network Arrangement	
	- Processing Charge per Service Order	
	Rate Zone 1	50.00
	Rate Zone 2	50.00
	Rate Zone 3	50.00
(I)	Remote Translations	
	per remote trunk group, per occurrence	350.00
(J)	Service Order Charge	
	per Service Order	1.00
(K)	Transport Interconnection Charge	Monthly Charge
	Collocated	
	- Originating	$.000000
	- Terminating	.000000
	Non-Collocated	
	- Originating	.000000
	- Terminating	.000000

6. Switched Access Service (Cont'd)

6.9 Rates and Charges (Cont'd)

6.9.1 Switched Transport (Cont'd)

(L)	Common Channel Signaling Access Service	RATE
	STP access mileage - Per month, per mile	$3.50
	Note: An STP Port Termination charge also applies. See Section 6.9.2(A) following.	
(M)	Billing Validation Service	
	(1) Query Transport - Per query	0.000200
	(2) Query Validation - Per query	0.040000
	(3) Service Establishment - Per originating point code	125.00
(N)	Toll Free* Data Base Access Service (available with Trunkside BSA-101459X Option equipped out of band Signaling)	
	Basic Query Charge - Per Query	0.003804
	Toll Free Data Base Vertical Feature Package (VFP) (available with Toll Free Data Base Basic Access Service)	
	VFP Charge - Per Query	0.001989

* "Toll Free" is considered to mean any access service which utilizes any of the following NPA's: 800, 888, 877, 866, 855, 844, 833, and 822 as they become available to the industry.

6. Switched Access Service (Cont'd)

6.9 Rates and Charges (Cont'd)

6.9.1 Switched Transport (Cont'd)

(O) Dedicated Network Access Link (DNAL)

(1) Metallic DNAL

	Monthly Rates
(a) Channel Termination	
- Per point of termination	$22.50

	Nonrecurring Charges First	Nonrecurring Charges Add'l
- Per point of termination Installation	$200.00	$150.00

	Monthly Rates Fixed	Monthly Rates Per Mile
(b) Channel Mileage	None	$3.25

(2) Voice Grade DNAL

	Monthly Rates
(a) Channel Termination	
- Per point of termination	
Two-Wire	$14.00
Four-Wire	26.02

	Nonrecurring Charges First	Nonrecurring Charges Add'l
- Per point of termination Installation		
Two-Wire	$ 1.00	$1.00
Four-Wire	1.00	.75

	Monthly Rates Fixed	Monthly Rates Per Mile
(b) Channel Mileage	$10.00	$2.00

	Monthly Rates	Nonrecurring Charges

6. Switched Access Service (Cont'd)

6.9 Rates and Charges (Cont'd)

6.9.1 Switched Transport (Cont'd)

(O) Dedicated Network Access Link (DNAL) (Cont'd)

(2) Voice Grade DNAL (Cont'd)

(c) Optional Features

(1) Conditioning - Per point of termination		
(A) C-Type	$2.00	None
(B) Improved Attenuation Distortion	$2.00	None
(C) Improved Envelope Delay Distortion	$75.00	None
(2) Improved Return Loss for Effective Two-Wire Transmission or Improved Termination for Four-Wire Transmission		
(A) Improved Return Loss - Per point of termination - Two-Wire	$7.00	$None
(B) Improved Termination - Per point of termination - Four-Wire	9.00	None
(3) Data Capability - Per point of termination	2.00	$250.00

(P) 500 Access Service

	USOC	Rate
Query Charge - Per Query	500DB	$.0085

(Q) Carrier Identification Parameter (CIP)

	USOC	Rate
- Per Trunk, per month	U7CPT	$.46

6. Switched Access Service (Cont'd)

6.9 Rates and Charges (Cont'd)

6.9.1 Switched Transport (Cont'd)

(R) Dedicated SONET Shared Assurance Network#

(1) DSSAN POP Entrance Ring
- Per STS3 termination

# of STS3s	Single POP Monthly Rate 1	Two POP Monthly Rate	Nonrecurring Rate
4 Minimum	$2,340.00	$2,890.00	$1.00
5	2,230.00	2,780.00	1.00
6	2,125.00	2,670.00	1.00
7	2,020.00	2,560.00	1.00
8	1,930.00	2,485.00	1.00
9	1,865.00	2,300.00	1.00
10	1,815.00	2,225.00	1.00
11	1,775.00	2,175.00	1.00
12	1,735.00	2,110.00	1.00
13	1,695.00	2,050.00	1.00
14	1,655.00	1,995.00	1.00
15	1,620.00	1,930.00	1.00
16	1,585.00	1,895.00	1.00
17	1,585.00	1,825.00	1.00
18	1,585.00	1,825.00	1.00
19	1,585.00	1,825.00	1.00
20	1,585.00	1,825.00	1.00
21	1,535.00	1,760.00	1.00
22	1,535.00	1,760.00	1.00
23	1,535.00	1,760.00	1.00
24	1,535.00	1,760.00	1.00
25	1,450.00	1,695.00	1.00
26	1,450.00	1,695.00	1.00
27	1,450.00	1,695.00	1.00
28	1,450.00	1,695.00	1.00
29	1,320.00	1,640.00	1.00
29 +	1,320.00	1,640.00	1.00

Additional POP Entrance Ring Mileage
(for rings over 10 air miles in circumference)
- Per each group of 16 STS3s, per mile for each mile over 10:

Monthly rate: $ 700.00

Service availability limited. Refer to # footnote on Page 6-200.

6. Switched Access Service (Cont'd)

6.9 Rates and Charges (Cont'd)

6.9.1 Switched Transport (Cont'd)

(R) Dedicated SONET Shared Assurance Network# (Cont'd)

(2) DSSAN Transport Channels
-from the POP SWC

	Mileage Bands		
	0–3 Miles	4-20 Miles	20+ Miles
DS1 Transport			
Basic to Tandem or End Office	$70.00	$155.00	$275.00
Premium to Tandem or End Office	80.00	175.00	300.00

(S) DSSSP Service

(1) Entrance Facility
-Per arrangement

	Monthly Rates	Nonrecurring Charges	
		First	Additional
Month-to-Month	$3,000.00	$1.00	$.75

(2) Direct Trunked Transport

Month-to-Month	
Fixed	$750.00
Per mile	185.00

(3) Optional Features

STS1/DS1 Multiplexing

Month-to-Month	$485.00	600.00

Note The above rates are applicable in all rate zones.

Service availability limited. Refer to # footnote on Page 6-200.

6. Switched Access Service (Cont'd)

6.9 Rates and Charges (Cont'd)

6.9.1 Switched Transport (Cont'd)

(T) Dedicated SONET Shared Dual Path*

(1) DSSDP for DS1
- Per point of termination, per month $40.00

(2) DSSDP DS1 Standby Mileage
- Per mile, per month $6.50

(3) DS3 and DSSSP
- Per point of termination, per month $400.00

(4) DSSDP DS3 and DSSSP Standby Mileage
- Per mile, per month $65.00

(5) DSSDP Nonrecurring Charges

	First	Additional
Installation of DS1, DS3, or DSSSP - per point of termination	$1.00	$.75

* The above rates are applicable in all rate zones.

6. Switched Access Service (Cont'd)

6.9 Rates and Charges (Cont'd)

6.9.1 Switched Transport (Cont'd)

(U) Dedicated SONET Optical Transport Service#

(1) Nodes

(a) Monthly Rates, Per Node

Node Type	Category I 3-Year Term
4 Channel Node	
- Primary or Expansion Customer Premises	$ 7,500.00
- Primary or Expansion Central Office	7,500.00
16 Channel Node	
- Primary Customer Premises	12,500.00
- Primary Central Office	12,500.00
- Expansion Customer Premises	12,500.00
- Expansion Central Office	12,500.00
5-Year Term	
4 Channel Node	
- Primary or Expansion Customer Premises	3,900.00
- Primary or Expansion Central Office	3,900.00
16 Channel Node	
- Primary Customer Premises	6,500.00
- Primary Central Office	6,500.00
- Expansion Customer Premises	6,500.00
- Expansion Central Office	6,500.00
7-Year Term	
4 Channel Node	
- Primary or Expansion Customer Premises	3,480.00
- Primary or Expansion Central Office	3,480.00
16 Channel Node	
- Primary Customer Premises	5,800.00
- Primary Central Office	5,800.00
- Expansion Customer Premises	5,800.00
- Expansion Central Office	5,800.00

Service availability limited. Refer to # footnote on Page 6-219.

6. Switched Access Service (Cont'd)

6.9 Rates and Charges (Cont'd)

6.9.1 Switched Transport (Cont'd)

(U) Dedicated SONET Optical Transport Service# (Cont'd)

(1) Nodes (Cont'd)

(a) Monthly Rates, Per Node (Cont'd)

Node Type	Category II 3-Year Term
4 Channel Node	
- Primary or Expansion Customer Premises	$ 6,530.00
- Primary or Expansion Central Office	6,530.00
16 Channel Node	
- Primary Customer Premises	8,270.00
- Primary Central Office	8,270.00
- Expansion Customer Premises	8,270.00
- Expansion Central Office	8,270.00
5-Year Term	
4 Channel Node	
- Primary or Expansion Customer Premises	4,900.00
- Primary or Expansion Central Office	4,900.00
16 Channel Node	
- Primary Customer Premises	6,200.00
- Primary Central Office	6,200.00
- Expansion Customer Premises	6,200.00
- Expansion Central Office	6,200.00
7-Year Term	
4 Channel Node	
- Primary or Expansion Customer Premises	4,850.00
- Primary or Expansion Central Office	4,850.00
16 Channel Node	
- Primary Customer Premises	6,100.00
- Primary Central Office	6,100.00
- Expansion Customer Premises	6,100.00
- Expansion Central Office	6,100.00

Service availability limited. Refer to # footnote on Page 6-219.

6. Switched Access Service (Cont'd)

6.9 Rates and Charges (Cont'd)

6.9.1 Switched Transport (Cont'd)

(U) Dedicated SONET Optical Transport Service# (Cont'd)

(1) Nodes (Cont'd)

(b) Initial Nonrecurring Charges

Node Type	Category I 3-Year Term
4 Channel Node	
- Primary or Expansion Customer Premises	$1.00
- Primary or Expansion Central Office	1.00
16 Channel Node	
- Primary Customer Premises	1.00
- Primary Central Office	1.00
- Expansion Customer Premises	1.00
- Expansion Central Office	1.00
5-Year Term	
4 Channel Node	
- Primary or Expansion Customer Premises	1.00
- Primary or Expansion Central Office	1.00
16 Channel Node	
- Primary Customer Premises	1.00
- Primary Central Office	1.00
- Expansion Customer Premises	1.00
- Expansion Central Office	1.00
7-Year Term	
4 Channel Node	
- Primary or Expansion Customer Premises	1.00
- Primary or Expansion Central Office	1.00
16 Channel Node	
- Primary Customer Premises	1.00
- Primary Central Office	1.00
- Expansion Customer Premises	1.00
- Expansion Central Office	1.00

Service availability limited. Refer to # footnote on Page 6-219.

6. Switched Access Service (Cont'd)

6.9 Rates and Charges (Cont'd)

6.9.1 Switched Transport (Cont'd)

(U) Dedicated SONET Optical Transport Service# (Cont'd)

(1) Nodes (Cont'd)

(b) Initial Nonrecurring Charges (Cont'd)

Node Type	Category II 3-Year Term
4 Channel Node	
- Primary or Expansion Customer Premises	$1.00
- Primary or Expansion Central Office	1.00
16 Channel Node	
- Primary Customer Premises	1.00
- Primary Central Office	1.00
- Expansion Customer Premises	1.00
- Expansion Central Office	1.00
5-Year Term	
4 Channel Node	
- Primary or Expansion Customer Premises	1.00
- Primary or Expansion Central Office	1.00
16 Channel Node	
- Primary Customer Premises	1.00
- Primary Central Office	1.00
- Expansion Customer Premises	1.00
- Expansion Central Office	1.00
7-Year Term	
4 Channel Node	
- Primary or Expansion Customer Premises	1.00
- Primary or Expansion Central Office	1.00
16 Channel Node	
- Primary Customer Premises	1.00
- Primary Central Office	1.00
- Expansion Customer Premises	1.00
- Expansion Central Office	1.00

Service availability limited. Refer to # footnote on Page 6-219.

6. Switched Access Service (Cont'd)

6.9 Rates and Charges (Cont'd)

6.9.1 Switched Transport (Cont'd)

(U) Dedicated SONET Optical Transport Service# (Cont'd)

(1) Nodes (Cont'd)

(c) Subsequent Nonrecurring Charges

	Category I Nonrecurring Charge
Subsequent Installation Per 4 Channel or 16 Channel Primary or Expansion Node	$ 1,600.00
Upgrade to 16 Channel Primary or Expansion Node, Per 4 Channel Primary or Expansion Node Upgraded	20,000.00

	Category II Nonrecurring Charge
Subsequent Installation Per 4 Channel or 16 Channel Primary or Expansion Node	1,600.00
Upgrade to 16 Channel Primary or Expansion Node, Per 4 Channel Primary or Expansion Node Upgraded	20,000.00

Service availability limited. Refer to # footnote on Page 6-219.

6. Switched Access Service (Cont'd)

6.9 Rates and Charges (Cont'd)

6.9.1 Switched Transport (Cont'd)

(U) Dedicated SONET Optical Transport Service# (Cont'd)

(2) Ring Mileage, Per Mile

	Category I Monthly Rate
3-Year Term	
- Miles 1 - 20	$1,100.00
- Miles 21 and Over	520.00
5-Year Term	
- Miles 1 - 20	639.00
- Miles 21 and Over	300.00
7-Year Term	
- Miles 1 - 20	575.00
- Miles 21 and Over	270.00

	Category II Monthly Rate
3-Year Term	
- Miles 1 - 20	310.00
- Miles 21 and Over	310.00
5-Year Term	
- Miles 1 - 20	230.00
- Miles 21 and Over	230.00
7-Year Term	
- Miles 1 - 20	225.00
- Miles 21 and Over	225.00

Service availability limited. Refer to # footnote on Page 6-219.

6. Switched Access Service (Cont'd)

6.9 Rates and Charges (Cont'd)

6.9.1 Switched Transport (Cont'd)

(U) Dedicated SONET Optical Transport Service# (Cont'd)

(3) Network Optimization

(a) Monthly Rate,
Per Amplification Device

	Category I
	Monthly Rate
At Node 3-Year Term	$5,000.00
At Node 5-Year Term	2,650.00
At Node 7-Year Term	2,400.00
Mid-Span 3-Year Term	5,400.00
Mid-Span 5-Year Term	2,800.00
Mid-Span 7-Year Term	2,600.00

	Category II
	Monthly Rate
Mid-Span 3-Year Term	5,130.00
Mid-Span 5-Year Term	3,850.00
Mid-Span 7-Year Term	3,825.00

Service availability limited. Refer to # footnote on Page 6-219.

6. Switched Access Service (Cont'd)

6.9 Rates and Charges (Cont'd)

6.9.1 Switched Transport (Cont'd)

(U) Dedicated SONET Optical Transport Service# (Cont'd)

(3) Network Optimization (Cont'd)

(b) Initial Nonrecurring Charges

	Category I Nonrecurring Charge
At Node 3-Year Term	$1.00
At Node 5-Year Term	1.00
At Node 7-Year Term	1.00
Mid-Span 3-Year Term	1.00
Mid-Span 5-Year Term	1.00
Mid-Span 7-Year Term	1.00

	Category II Nonrecurring Charge
Mid-Span 3-Year Term	1.00
Mid-Span 5-Year Term	1.00
Mid-Span 7-Year Term	1.00

(c) Subsequent Nonrecurring Charges

	Category I Nonrecurring Charge
Subsequent Installation, Per Amplification Device	$1,600.00

	Category II Nonrecurring Charge
Subsequent Installation, Per Amplification Device	1,600.00

Service availability limited. Refer to # footnote on Page 6-219.

6. Switched Access Service (Cont'd)

6.9 Rates and Charges (Cont'd)

6.9.1 Switched Transport (Cont'd)

(U) Dedicated SONET Optical Transport Service# (Cont'd)

(4) Optical Transport Channels

(a) Monthly Rates

Category I

	3-Year Term
Unprotected SONET OC3	$ 850.00
Unprotected SONET OC12	1,400.00
Unprotected SONET OC48	3,450.00
Unprotected SONET OC192	5,800.00

	5-Year Term
Unprotected SONET OC3	$ 450.00
Unprotected SONET OC12	725.00
Unprotected SONET OC48	1,870.00
Unprotected SONET OC192	4,100.00

	7-Year Term
Unprotected SONET OC3	$ 400.00
Unprotected SONET OC12	650.00
Unprotected SONET OC48	1,625.00
Unprotected SONET OC192	3,250.00

Category II

	3-Year Term
Unprotected SONET OC3	$1,270.00
Unprotected SONET OC12	1,400.00
Unprotected SONET OC48	1,870.00
Unprotected SONET OC192	4,600.00

	5-Year Term
Unprotected SONET OC3	$ 950.00
Unprotected SONET OC12	1,050.00
Unprotected SONET OC48	1,400.00
Unprotected SONET OC192	3,450.00

	7-Year Term
Unprotected SONET OC3	$ 850.00
Unprotected SONET OC12	950.00
Unprotected SONET OC48	1,300.00
Unprotected SONET OC192	3,350.00

Service availability limited. Refer to # footnote on Page 6-219.

6. Switched Access Service (Cont'd)

6.9 Rates and Charges (Cont'd)

6.9.1 Switched Transport (Cont'd)

(U) Dedicated SONET Optical Transport Service# (Cont'd)

(4) Optical Transport Channels (Cont'd)

(b) Nonrecurring Charges

(1) Initial Installation Charges, Per Optical Transport Channel

Category I

Interface Type	Nonrecurring Charge
Unprotected SONET OC3	$1.00
Unprotected SONET OC12	1.00
Unprotected SONET OC48	1.00
Unprotected SONET OC192	1.00

Category II

Interface Type	Nonrecurring Charge
Unprotected SONET OC3	1.00
Unprotected SONET OC12	1.00
Unprotected SONET OC48	1.00
Unprotected SONET OC192	1.00

(2) Subsequent Installation Charges, Per Optical Transport Channel

Category I

Unprotected SONET OC3	1.00
Unprotected SONET OC12	1.00
Unprotected SONET OC48	1.00
Unprotected SONET OC192	1.00

Category II

Unprotected SONET OC3	1.00
Unprotected SONET OC12	1.00
Unprotected SONET OC48	1.00
Unprotected SONET OC192	1.00

Service availability limited. Refer to # footnote on Page 6-219.

6. Switched Access Service (Cont'd)

6.9 Rates and Charges (Cont'd)

6.9.2 End Office

(A) Local Switching

Premium Rates	Rate
LS1-Feature Groups A & B (except for FGB when subscribed to by a provider of MTS and WATS)	$.002273
LS1-Lineside BSA and Trunkside BSA - 950 Option (except for Trunkside BSA-950 Option when subscribed to by a provider of MTS and WATS)	.002270
LS2-Feature Groups C & D (and for FGB when subscribed to by a provider of MTS and WATS)	.002273
LS2-Trunkside BSA - MTS/WATS Option and Trunkside BSA-101164X Option (and for Trunkside BSA-950 Option when subscribed to by a provider of MTS and WATS)	.002270
Transitional Rates	
FGA and FGB (except for FGB when subscribed to by a provider of MTS and WATS)	.001023
Lineside BSA and Trunkside BSA - 950 Option (except for Trunkside BSA-950 Option when subscribed to by a provider of MTS and WATS)	.001022

6. Switched Access Service (Cont'd)

6.9 Rates and Charges (Cont'd)

6.9.2 End Office (Cont'd)

(A) Local Switching (Cont'd)

	Monthly Rate
Dedicated Trunk Port, - per Trunk	$ 12.50
Shared End Office Trunk - per minute of use	0.001581
Common Channel Signaling Access Service STP Port Termination* - Per month, per port	900.00

6. Switched Access Service (Cont'd)

6.9 Rates and Charges (Cont'd)

6.9.2 End Office (Cont'd)

(A) Local Switching (Cont'd)

(1) Common Switching Optional Features and BSEs

		Rate	Nonrecurring Charge
(a)	Call Denial on Line or Hunt Group (available with Lineside BSA) - Per Transmission Path or Transmission Path Group	None	None
(b)	Service Code Denial on Line or Hunt Group (available with Lineside BSA) - Per Transmission Path or Transmission Path Group	None	None
(c)	Hunt Group Arrangement (available with Lineside BSA) - Per Transmission Path Group	None	None
(d)	Hunting Service Arrangements BSE (available with Lineside BSA) - Per Line, Per Month	$ 0.15	None
(e)	Hunting Service Arrangements: Circular BSE (available with Lineside BSA) - Per Line, Per Month	$ 0.15	None
(f)	Hunting Service Arrangements: Preferred BSE (available with Lineside BSA) - Per Line, Per Month	$ 0.15	None
(g)	Uniform Call Distribution Arrangement (available with Lineside BSA) - Per Transmission Path	None	None
(h)	Uniform Call Distribution BSE (available with Lineside BSA) - Per Line, Per Month	$ 1.25	None

6. Switched Access Service (Cont'd)

6.9 Rates and Charges (Cont'd)

6.9.2 End Office (Cont'd)

(A) Local Switching (Cont'd)

(1) Common Switching Optional Features and BSEs (Cont'd)

		Rate	Nonrecurring Charge
(i)	Nonhunting Number for use with Hunt Group Arrangement or Uniform Call Distribution Arrangement (available with Lineside BSA) - Per Transmission Path	None	None
(j)	Non-Hunt Directory Numbers BSE (available with Lineside BSA) - Per Group, Per Month	$ 0.00	None
(k)	Automatic Number Identification (available with Trunkside BSA - 950 Option, Trunkside - MTS/WATS Option and Trunkside - 101XXXX Option) - Per Transmission Path Group	None	None
(l)	Automatic Number Identification BSE (available with Trunkside BSA - 950 Option, Trunkside BSA - MTS/WATS Option and Trunkside - 101XXXX Option - Per Call	$ 0.0005	None
(m)	Up to 7 Digit Outpulsing of Access Digits to Customer (available with Trunkside BSA - 950 Option) - Per Transmission Path Group	None	None
(n)	Revertive Pulse Address Signaling (available with Trunkside BSA - MTS/WATS Option) - Per Transmission Path Group	None	None
(o)	Delay Dial Start-Pulsing Signaling (available with Trunkside BSA - MTS/WATS Option) - Per Transmission Path Group	None	None

6. Switched Access Service (Cont'd)

6.9 Rates and Charges (Cont'd)

6.9.2 End Office (Cont'd)

(A) Local Switching (Cont'd)

(1) Common Switching Optional Features and BSEs (Cont'd)

		Rate	Nonrecurring Charge
(p)	Immediate Dial Pulse Address Signaling (available with Trunkside BSA - MTS/WATS Option and FGC) - Per Transmission Path Group	None	None
(q)	Dial Pulse Address Signaling (available with Trunkside BSA - MTS/WATS Option and FGC) - Per Transmission Path Group	None	None
(r)	Panel Call Indicator Address Signaling (available with Trunkside BSA - MTS/WATS Option and FGC) - Per Transmission Path Group	None	None
(s)	Service Class Routing (available with Trunkside BSA - MTS/WATS Option, Trunkside BSA-101XXXX Option, FGC and FGD) - Per Transmission Path Group	None	None
(t)	Alternate Traffic Routing (available with FGB, FGC and FGD) - Per Transmission Path Group	None	None
(u)	Alternate Traffic Routing (available with Trunkside BSA - 950 Option, Trunkside BSA - MTS/WATS Option, and Trunkside BSA-101XXXX Option, - Per Transmission Path Group	None	$31.00
(v)	Trunk Access Limitation Arrangement (available with Trunkside BSA - MTS/WATS Option, Trunkside BSA-10XXX or 101XXXX Option, FGC and FGD - Per End Office	None	None

6. Switched Access Service (Cont'd)

6.9 Rates and Charges (Cont'd)

6.9.2 End Office (Cont'd)

(A) Local Switching (Cont'd)

(1) Common Switching Optional Features and BSEs (Cont'd)

		Rate	Nonrecurring Charge
(w)	Call Gapping Arrangement (available with Trunkside BSA-101XXXX Option and FGD) - Per End Office	None	None
(x)	International Carrier Option (available with Trunkside BSA-101XXXX Option and FGD) - Per End Office and Access Tandem	None	None
(y)	Band Advance Arrangement for use with WATS Access Line Service (available with Lineside BSA, Trunkside BSA - 950 Option, Trunkside BSA - MTS/WATS Option, Trunkside BSA-101XXXX Option, FGA, FGB, FGC and FGD) - Per Arrangement	None	None
(z)	End Office End User Line Service Screening for use with WATS Access Line Service (available with Lineside BSA, Trunkside BSA - 950 Option, Trunkside BSA - MTS/WATS Option, Trunkside BSA - 101XXXX Option, FGA, FGB, FGC and FGD) - Per WATS Access Line	None	None
(aa)	Hunt Group Arrangement for use with WATS Access Line Service (available with Trunkside BSA - 950 Option, Trunkside BSA - MTS/WATS Option, Trunkside BSA-101XXXX Option, FGA, FGB, FGC and FGD) - Per WATS Access Line	None	None

6. Switched Access Service (Cont'd)

6.9 Rates and Charges (Cont'd)

6.9.2 End Office (Cont'd)

(A) Local Switching (Cont'd)

(1) Common Switching Optional Features and BSEs (Cont'd)

		Rate	Nonrecurring Charge
(ab)	Uniform Call Distribution Arrangement for use with WATS Access Line Service (available with Trunkside BSA - 950 Option, Trunkside BSA - MTS/WATS Option, Trunkside BSA-101XXXX Option, FGA, FGB, FGC and FGD) - Per WATS Access Line Group	None	None
(ac)	Nonhunting Number for use with Hunt Group Arrangement or Uniform Call Distribution Arrangement for use with WATS Access Line Service (available with Trunkside BSA - 950 Option, Trunkside BSA - MTS/WATS Option, Trunkside BSA-101XXXX Option, FGA, FGB, FGC and FGD) - Per WATS Access Line Group	None	None
(ad)	Toll Billing Exception (available with Lineside BSA and FGA) - Per Transmission Path	None	None

6. Switched Access Service (Cont'd)

6.9 Rates and Charges (Cont'd)

6.9.2 End Office (Cont'd)

(A) Local Switching (Cont'd)

(1) Common Switching Optional Features and BSEs (Cont'd)

		Rate	Nonrecurring Charge
(ae)	Calling Party Number (available with Trunkside BSA-101XXXX Option equipped with out of band signaling) - Per End Office, Per Trunk Group * +	None	None
(af)	Charge Number (available with Trunkside BSA-101XXXX Option equipped with out of band signaling) - Per End Office, Per Trunk Group *	None	None
(ag)	Charge Number BSE (available with Trunkside BSA-101XXXX Option with out of band signaling) - Per Call *	$ 0.0005	None
(ah)	Carrier Selection Parameter (available with Trunkside BSA-101XXXX Option equipped with out of band signaling) - Per End Office, Per Trunk Group * ++	None	None
(ai)	Answer Supervision With a Lineside Interface BSE (available with Lineside BSA) - Per Line, Per Month	$ 1.75	$15.00

* Available only on originating Trunkside BSA-101XXXX Option.
\+ Calling Party Number is not offered where it is not technically feasible.
++ Available only at designated Telephone Company switches.

6. Switched Access Service (Cont'd)

6.9 Rates and Charges (Cont'd)

6.9.2 End Office (Cont'd)

(A) Local Switching (Cont'd)

(1) Common Switching Optional Features and BSEs (Cont'd)

		Rate	Nonrecurring Charge
(aj)	Three-Way Call Transfer BSE (available with Lineside BSA) - Per Line, Per Month	$7.50	$3.00
(ak)	Messaging Services Interface BSE (available with Lineside BSA) - Per Line, Per Month	515.00	780.00
(al)	Premier Messaging Services Interface BSE - Per Arrangement, Per Month		500.00
(am)	Make Busy Arrangement BSE (available with Lineside BSA) -Per Group, Per Month	80.00	30.00
(an)	Three-Way Calling BSE (available with Lineside BSA) - Per Line, Per Month	7.00	3.00
(ao)	Flexible Automatic Number Identification BSE (available with Trunkside BSA-101XXXX Option) - Per End Office, Per CIC	None	1,100.00
	- Payphone Coding Digits Charge - Per line, each Payphone Service Provider		0.00*
(ap)	Flexible Automatic Number Identification, available with Feature Group D - Per End Office, Per CIC	None	1,100.00
	- Payphone Coding Digits Charge - Per line, each Payphone Service Provider		0.00*

* Rate to be recovered over 24 months commencing November 1, 1998 and ending October 31, 2000.

6. Switched Access Service (Cont'd)

6.9 Rates and Charges (Cont'd)

6.9.2 End Office (Cont'd)

(A) Local Switching (Cont'd)

(1) Common Switching Optional Features and BSEs (Cont'd)

		Rate	Nonrecurring Charge
(aq)	Direct Inward Dialing Service BSE (available with Lineside BSA) - Per Trunk, Per month -	$10.00	$ 6.00
(ar)	Direct Inward Dialing Trunk Queuing BSE (available with Lineside BSA) - Per Trunk, Per month -	2.00	35.00
(as)	Access Transport Parameter (available with Trunkside BSA-101XXXX Option equipped with out of band signaling) - Per End Office, Per Trunk Group * ++	-NONE	NONE
(at)	950 on Feature Group D - Per End Office, Per CIC	NONE	270.00

* Available only on originating Trunkside BSA-101XXXX Option.
++ Available only at designated Telephone Company switches.

6. Switched Access Service (Cont'd)

6.9 Rates and Charges (Cont'd)

6.9.2 End Office (Cont'd)

(A) Local Switching (Cont'd)

(1) Common Switching Optional Features and BSEs (Cont'd)

(au) 900 Access Service (available with Feature Groups (FG) C, FGD, 900 Access Service trunk groups, Trunkside BSA-MTS/WATS Option and Trunkside BSA-101XXXX Option)

	Nonrecurring Charge First*	Nonrecurring Charge Additional*
- Per LATA, per NXX (activated or deactivated)		
Charleston	2,356.27	242.66
Clarksburg	706.88	72.80
- Per State, per NXX (activated or deactivated)		
State of West Virginia	3,298.77	339.72

(av) Switched Access Signalling Service (SASS) - per call — Rate 0.0000

* First and Additional nonrecurring charges are applied on a per order basis. The "First" rate applies to the initial code on an order for service and the "Additional" rate to each additional code on the same order.

6. Switched Access Service (Cont'd)

6.9 Rates and Charges (Cont'd)

6.9.2 End Office (Cont'd)

(A) Local Switching (Cont'd)

(2) Transport Termination Nonchargeable Options

(a) Line Side Terminations
(For Lineside BSA and FGA)

Two-Way Operation
- Dial Pulse with Loop Start
- Dial Pulse with Ground Start
- DTMF with Loop Start
- DTMF with Ground Start

Termination Operation
- Dial Pulse with Loop Start
- Dial Pulse with Ground Start
- DTMF with Loop Start
- DTMF with Ground Start

Originating Operation
- Loop Start
- Ground Start

(b) Trunk Side Terminations
(For Trunkside BSA - 950 Option, Trunkside BSA - MTS/WATS Option, Trunkside BSA-101XXXX Option, FGB, FGC and FGD)

Standard Trunk for Originating, Terminating or Two-Way operation (available with Trunkside BSA -950 Option, Trunkside BSA - MTS/WATS Option, Trunkside BSA-101XXXX Option, FGB, FGC and FGD)

Rotary Dial Station Signaling Trunk (available with Trunkside BSA - 950 Option and FGB)

6. Switched Access Service (Cont'd)

6.9 Rates and Charges (Cont'd)

6.9.2 End Office (Cont'd)

(A) Local Switching (Cont'd)

(2) Transport Termination Nonchargeable Options (Cont'd)

(b) Trunk Side Terminations (Cont'd)

Operator Trunk, Coin, Non-Coin or Combined Coin & Non-Coin (available with Trunkside BSA - MTS/WATS Option & FGC)

Operator Trunk, Full Feature Arrangement (available with Trunkside BSA-101XXXX Option and FGD)

(3) WATS Access Line Termination Nonchargeable Options

(a) Line Side Terminations:

Originating Only Loop Start, Line Side Connection, with DTMF Address Signaling - Per Transmission Path

Originating Only Loop Start, Line Side Connection, with Dial Pulse Address Signaling - Per Transmission Path

6. Switched Access Service (Cont'd)

6.9 Rates and Charges (Cont'd)

6.9.2 End Office (Cont'd)

(A) Local Switching (Cont'd)

(3) WATS Access Line Termination Nonchargeable Options (Cont'd)

(a) Line Side Terminations: (Cont'd)

Originating Only
Ground Start, Line Side
Connection, with DTMF
Address Signaling
- Per WATS Access Line

Originating Only
Ground Start, Line Side
Connection, with Dial
Pulse Address Signaling
- Per WATS Access Line

Terminating Only
Loop Start, Line Side
Connection
- Per WATS Access Line

Terminating Only
Ground Start, Line Side
Connection
- Per WATS Access Line

(b) Trunk Side Terminations:

Terminating Only
Trunk Side Connection
for forwarding of Dialed
Number Identification
to End User
- Per WATS Access Line

(c) Dialed Number Identification
Service (DNIS)
- Common equipment to equip
  a group for DNIS
- Per WATS access line in the
  group

6. Switched Access Service (Cont'd)

6.9 Rates and Charges (Cont'd)

6.9.2 End Office (Cont'd)

(A) Local Switching (Cont'd)

(4) WATS Access Line Termination Chargeable Options

		Monthly Rate	Nonrecurring Charge
Answer Supervision Trunk Side Termina-tions For WATS Access lines Originating Only			
- Per Initial and Additional WATS Access Line Service, Per Trunk Group	-	None	None
- Per Initial WATS Access Line		$14.06	$100.28
- Per Each Additional WATS Access Line		14.06	55.67

6. Switched Access Service (Cont'd)

6.9 Rates and Charges (Cont'd)

		Rate
6.9.3	Message Unit Credit	
	- per Originating Lineside BSA Access Minute	($.002000)*
6.9.4	Equal Access Recovery Charge	
	Per Trunkside BSA-101XXXX Option and FGD trunk, per month	$0.00
6.9.5	Information Surcharge	
	Premium Rate Per Access Minute	0.000000
	Transitional Rate Per Access Minute	0.000000
6.9.6	Reserved	
6.9.7	Switched 56 Kilobit Service	
	- Per S56 access minute	$0.000000
6.9.8	Operator Transfer Service	
	- Per Call Transferred - -	$0.6695
6.9.9	0+900 Access Service	
	Activation per end office, Nonrecurring Charge	$400.00

* ( ) equals a negative amount.

6. Switched Access Service (Cont'd)

6.9 Rates and Charges (Cont'd)

6.9.10 Facilities Management Service#

(A) Primary Premises Entrance Facilities
- Per DS0 Equivalent Channel

(1) DS3 Electrical and Optical Interfaces -Month-to-Month

	USOC	Monthly Charge
N-MSA	TNWZS	$3.43
Price Band 4	TNWZS	3.43
Price Band 5	TNWZS	3.43
Price Band 6	TNWZS	3.43

(2) DS3 Term Plans
N-MSA

		Monthly Rates	
Rate Band	# of DS0s	3-Year Plan	5-Year Plan
1	1-672	$3.09	$2.23
2	673-1,344	2.58	1.86
3	1,345-2,016	2.06	1.49
4	2,017-2,688	1.95	1.41
5	2,689-3,360	1.89	1.36
6	3,361-4,032	1.83	1.32
7	4,033-4,704	1.77	1.28
8	4,705-5,376	1.72	1.24
9	5,377-6,048	1.66	1.20
10	6,049-6,720	1.60	1.15
11	6,721-7,392	1.55	1.12
12	7,393-8,064	1.54	0.97
13	8,065-8,736	1.54	0.68
14	8,737-9,408	1.54	0.68
15	9,409-10,080	1.54	0.68
16	10,081-10,752	1.54	0.68
17	10,753-11,424	1.54	0.67
18	11,425-12,096	1.47	0.67
19	12,097-12,768	1.47	0.67
20	12,769-13,440	1.41	0.67
21	13,441-14,112	1.37	0.66
22	14,113-14,784	1.33	0.66
23	14,785-15,456	1.29	0.66
24	15,457-16,128	1.25	0.65

Service availability limited. See # footnote on Page 6-239.

6. Switched Access Service (Cont'd)

6.9 Rates and Charges (Cont'd)

6.9.10 Facilities Management Service# (Cont'd)

(A) Primary Premises Entrance Facilities (Cont'd)
- Per DS0 Equivalent Channel

(2) DS3 Term Plans (Cont'd)
N-MSA (Cont'd)

		Monthly Rates	
Rate Band	# of DS0s	3-Year Plan	5-Year Plan
25	16,129-16,800	1.25	0.65
26	16,801-17,472	1.25	0.65
27	17,473-18,144	1.25	0.64
28	18,145-18,816	1.25	0.64
29	18,817-19,488	1.25	0.64
30	19,489-20,161	$1.25	$0.63
31	20,162-20,832	1.23	0.62
32	20,833-21,504	1.22	0.62
33	21,505-22,176	1.21	0.62
34	22,177-22,848	1.20	0.62
35	22,849-23,520	1.19	0.61
36	23,521-24,192	1.16	0.61
37	24,193-24,864	1.15	0.61
38	24,865-25,536	1.14	0.61
39	25,537-26,208	1.13	0.60
40	26,209-26,880	1.11	0.59
41	26,881-27,552	1.09	0.58
42	27,553-28,224	1.09	0.58
43	28,225-28,896	1.07	0.57
44	28,897-29,568	1.06	0.56
45	29,569-30,240	1.05	0.55
46	30,241-30,912	1.04	0.55
47	30,913-31,584	1.03	0.54
48	31,585-32,256	1.02	0.53

Service availability limited. See # footnote on Page 6-239.

6. Switched Access Service (Cont'd)

6.9 Rates and Charges (Cont'd)

6.9.10 Facilities Management Service# (Cont'd)

(A) Primary Premises Entrance Facilities (Cont'd)
- Per DS0 Equivalent Channel

(2) DS3 Term Plans (Cont'd)
Rate Band 4

		Monthly Rates	
Rate Band	# of DS0s	3-Year Plan	5-Year Plan
1	1-672	$3.09	$2.23
2	673-1,344	2.58	1.86
3	1,345-2,016	2.06	1.49
4	2,017-2,688	1.95	1.41
5	2,689-3,360	1.89	1.36
6	3,361-4,032	1.83	1.32
7	4,033-4,704	1.77	1.28
8	4,705-5,376	1.72	1.24
9	5,377-6,048	1.66	1.20
10	6,049-6,720	1.60	1.15
11	6,721-7,392	1.55	1.12
12	7,393-8,064	1.54	0.97
13	8,065-8,736	1.54	0.68
14	8,737-9,408	1.54	0.68
15	9,409-10,080	1.54	0.68
16	10,081-10,752	1.54	0.68
17	10,753-11,424	1.54	0.67
18	11,425-12,096	1.47	0.67
19	12,097-12,768	1.47	0.67
20	12,769-13,440	1.41	0.67
21	13,441-14,112	1.37	0.66
22	14,113-14,784	1.33	0.66
23	14,785-15,456	1.29	0.66
24	15,457-16,128	1.25	0.65
25	16,129-16,800	1.25	0.65
26	16,801-17,472	1.25	0.65
27	17,473-18,144	1.25	0.64
28	18,145-18,816	1.25	0.64
29	18,817-19,488	1.25	0.64

Service availability limited. See # footnote on Page 6-239.

6. Switched Access Service (Cont'd)

6.9 Rates and Charges (Cont'd)

6.9.10 Facilities Management Service# (Cont'd)

(A) Primary Premises Entrance Facilities (Cont'd)
- Per DS0 Equivalent Channel

(2) DS3 Term Plans (Cont'd)
Rate Band 4 (Cont'd)

		Monthly Rates	
Rate Band	# of DS0s	3-Year Plan	5-Year Plan
30	19,489-20,161	$1.25	$0.63
31	20,162-20,832	1.23	0.62
32	20,833-21,504	1.22	0.62
33	21,505-22,176	1.21	0.62
34	22,177-22,848	1.20	0.62
35	22,849-23,520	1.19	0.61
36	23,521-24,192	1.16	0.61
37	24,193-24,864	1.15	0.61
38	24,865-25,536	1.14	0.61
39	25,537-26,208	1.13	0.60
40	26,209-26,880	1.11	0.59
41	26,881-27,552	1.09	0.58
42	27,553-28,224	1.09	0.58
43	28,225-28,896	1.07	0.57
44	28,897-29,568	1.06	0.56
45	29,569-30,240	1.05	0.55
46	30,241-30,912	1.04	0.55
47	30,913-31,584	1.03	0.54
48	31,585-32,256	1.02	0.53

Service availability limited. See # footnote on Page 6-239.

6. Switched Access Service (Cont'd)

6.9 Rates and Charges (Cont'd)

6.9.10 Facilities Management Service# (Cont'd)

(A) Primary Premises Entrance Facilities (Cont'd)
- Per DS0 Equivalent Channel

(2) DS3 Term Plans (Cont'd)
Rate Band 5

Rate Band	# of DS0s	Monthly Rates 3-Year Plan	5-Year Plan
1	1-672	$3.09	$2.23
2	673-1,344	2.58	1.86
3	1,345-2,016	2.06	1.49
4	2,017-2,688	1.95	1.41
5	2,689-3,360	1.89	1.36
6	3,361-4,032	1.83	1.32
7	4,033-4,704	1.77	1.28
8	4,705-5,376	1.72	1.24
9	5,377-6,048	1.66	1.20
10	6,049-6,720	1.60	1.15
11	6,721-7,392	1.55	1.12
12	7,393-8,064	1.54	0.97
13	8,065-8,736	1.54	0.68
14	8,737-9,408	1.54	0.68
15	9,409-10,080	1.54	0.68
16	10,081-10,752	1.54	0.68
17	10,753-11,424	1.54	0.67
18	11,425-12,096	1.47	0.67
19	12,097-12,768	1.47	0.67
20	12,769-13,440	1.41	0.67
21	13,441-14,112	1.37	0.66
22	14,113-14,784	1.33	0.66
23	14,785-15,456	1.29	0.66
24	15,457-16,128	1.25	0.65
25	16,129-16,800	1.25	0.65
26	16,801-17,472	1.25	0.65
27	17,473-18,144	1.25	0.64
28	18,145-18,816	1.25	0.64
29	18,817-19,488	1.25	0.64

Service availability limited. See # footnote on Page 6-239.

6. Switched Access Service (Cont'd)

6.9 Rates and Charges (Cont'd)

6.9.10 Facilities Management Service# (Cont'd)

(A) Primary Premises Entrance Facilities (Cont'd)
- Per DS0 Equivalent Channel

(2) DS3 Term Plans (Cont'd)
Rate Band 5 (Cont'd)

		Monthly Rates	
Rate Band	# of DS0s	3-Year Plan	5-Year Plan
30	19,489-20,161	$1.25	$0.63
31	20,162-20,832	1.23	0.62
32	20,833-21,504	1.22	0.62
33	21,505-22,176	1.21	0.62
34	22,177-22,848	1.20	0.62
35	22,849-23,520	1.19	0.61
36	23,521-24,192	1.16	0.61
37	24,193-24,864	1.15	0.61
38	24,865-25,536	1.14	0.61
39	25,537-26,208	1.13	0.60
40	26,209-26,880	1.11	0.59
41	26,881-27,552	1.09	0.58
42	27,553-28,224	1.09	0.58
43	28,225-28,896	1.07	0.57
44	28,897-29,568	1.06	0.56
45	29,569-30,240	1.05	0.55
46	30,241-30,912	1.04	0.55
47	30,913-31,584	1.03	0.54
48	31,585-32,256	1.02	0.53

Service availability limited. See # footnote on Page 6-239.

6. Switched Access Service (Cont'd)

6.9 Rates and Charges (Cont'd)

6.9.10 Facilities Management Service# (Cont'd)

(A) Primary Premises Entrance Facilities (Cont'd)
- Per DS0 Equivalent Channel

(2) DS3 Term Plans (Cont'd)
Rate Band 6

Rate Band	# of DS0s	Monthly Rates 3-Year Plan	Monthly Rates 5-Year Plan
1	1-672	$3.09	$2.23
2	673-1,344	2.58	1.86
3	1,345-2,016	2.06	1.49
4	2,017-2,688	1.95	1.41
5	2,689-3,360	1.89	1.36
6	3,361-4,032	1.83	1.32
7	4,033-4,704	1.77	1.28
8	4,705-5,376	1.72	1.24
9	5,377-6,048	1.66	1.20
10	6,049-6,720	1.60	1.15
11	6,721-7,392	1.55	1.12
12	7,393-8,064	1.54	0.97
13	8,065-8,736	1.54	0.68
14	8,737-9,408	1.54	0.68
15	9,409-10,080	1.54	0.68
16	10,081-10,752	1.54	0.68
17	10,753-11,424	1.54	0.67
18	11,425-12,096	1.47	0.67
19	12,097-12,768	1.47	0.67
20	12,769-13,440	1.41	0.67
21	13,441-14,112	1.37	0.66
22	14,113-14,784	1.33	0.66
23	14,785-15,456	1.29	0.66
24	15,457-16,128	1.25	0.65
25	16,129-16,800	1.25	0.65
26	16,801-17,472	1.25	0.65
27	17,473-18,144	1.25	0.64
28	18,145-18,816	1.25	0.64
29	18,817-19,488	1.25	0.64

Service availability limited. See # footnote on Page 6-239.

6. Switched Access Service (Cont'd)

6.9 Rates and Charges (Cont'd)

6.9.10 Facilities Management Service# (Cont'd)

(A) Primary Premises Entrance Facilities (Cont'd)
- Per DS0 Equivalent Channel

(2) DS3 Term Plans (Cont'd)
Rate Band 6 (Cont'd)

		Monthly Rates	
Rate Band	# of DS0s	3-Year Plan	5-Year Plan
30	19,489-20,161	$1.25	$0.63
31	20,162-20,832	1.23	0.62
32	20,833-21,504	1.22	0.62
33	21,505-22,176	1.21	0.62
34	22,177-22,848	1.20	0.62
35	22,849-23,520	1.19	0.61
36	23,521-24,192	1.16	0.61
37	24,193-24,864	1.15	0.61
38	24,865-25,536	1.14	0.61
39	25,537-26,208	1.13	0.60
40	26,209-26,880	1.11	0.59
41	26,881-27,552	1.09	0.58
42	27,553-28,224	1.09	0.58
43	28,225-28,896	1.07	0.57
44	28,897-29,568	1.06	0.56
45	29,569-30,240	1.05	0.55
46	30,241-30,912	1.04	0.55
47	30,913-31,584	1.03	0.54
48	31,585-32,256	1.02	0.53

Service availability limited. See # footnote on Page 6-239.

6. Switched Access Service (Cont'd)

6.9 Rates and Charges (Cont'd)

6.9.10 Facilities Management Service# (Cont'd)

(A) Primary Premises Entrance Facilities (Cont'd)
- Per DS0 Equivalent Channel

(3) DS1 Electrical Interface

	Month-to-Month	3 Year Plan	5 Year Plan
Initial - 0-144 DS0 Equivalent Channels			
N-MSA	$1,300.00	$1,105.00	$910.00
Price Band 4	1,300.00	1,105.00	910.00
Price Band 5	1,300.00	1,105.00	910.00
Price Band 6	1,300.00	1,105.00	910.00
DS0 Equivalent Channels over 144 - per DS0			
N-MSA	9.00	7.65	6.30
Price Band 4	9.00	7.65	6.30
Price Band 5	9.00	7.65	6.30
Price Band 6	9.00	7.65	6.30

(B) (Reserved)

(C) Primary Premises Cross-Connects

(1) DS1 Interface - a minimum of 144 DS0s are required

(a) Virtual Collocation

	Term	Monthly Rate
i)	Month-to-Month	$0.00
ii)	3-Year	0.00
iii)	5-Year	0.00

(b) Physical Collocation

	Term	Monthly Rate
i)	Month-to-Month	$0.00
ii)	3-Year	0.00
iii)	5-Year	0.00

Service availability limited. See # footnote on Page 6-239.

6. Switched Access Service (Cont'd)

6.9 Rates and Charges (Cont'd)

6.9.10 Facilities Management Service# (Cont'd)

(C) Primary Premises Cross-Connects (Cont'd)

(2) DS3 Interface
- per DS0 Equivalent Channel, except initial minimums of 672 is required.

(a) Virtual Collocation

	Term	Monthly Rate
i)	Month-to-Month	$0.00
ii)	3-Year	0.00
iii)	5-Year	0.00

(b) Physical Collocation

	Term	Monthly Rate
i)	Month-to-Month	$0.00
ii)	3-Year	0.00
iii)	5-Year	0.00

(D) Channel Mileage
- per DS0 Equivalent Channel

	Monthly Rates Fixed	Per Mile
(1) DS1		
Month-to-Month		
N-MSA	$2.25	$1.03
Price Band 4	2.25	1.03
Price Band 5	2.25	1.03
Price Band 6	2.25	1.03
3 Year Plan		
N-MSA	1.91	0.88
Price Band 4	1.91	0.88
Price Band 5	1.91	0.88
Price Band 6	1.91	0.88
5 Year Plan		
N-MSA	1.58	0.72
Price Band 4	1.58	0.72
Price Band 5	1.58	0.72
Price Band 6	1.58	0.72

Service availability limited. See # footnote on Page 6-239.

6. Switched Access Service (Cont'd)

6.9 Rates and Charges (Cont'd)

6.9.10 Facilities Management Service# (Cont'd)

(D) Channel Mileage (Cont'd)
- per DS0 Equivalent Channel

	Monthly Rates Fixed	Monthly Rates Per Mile
(2) DS3 - Basic		
Month-to-Month		
N-MSA	$4.00	$1.11
Price Band 4	4.00	1.11
Price Band 5	4.00	1.11
Price Band 6	4.00	1.11
3 Year Plan		
N-MSA	3.40	0.94
Price Band 4	3.40	0.94
Price Band 5	3.40	0.94
Price Band 6	3.40	0.94
5 Year Plan		
N-MSA	2.80	0.78
Price Band 4	2.80	0.78
Price Band 5	2.80	0.78
Price Band 6	2.80	0.78
(3) DS3 - Direct		
Month-to-Month		
N-MSA	3.40	0.94
Price Band 4	3.40	0.94
Price Band 5	3.40	0.94
Price Band 6	3.40	0.94
3 Year Plan		
N-MSA	2.89	0.80
Price Band 4	2.89	0.80
Price Band 5	2.89	0.80
Price Band 6	2.89	0.80
5 Year Plan		
N-MSA	2.38	0.66
Price Band 4	2.38	0.66
Price Band 5	2.38	0.66
Price Band 6	2.38	0.66

Service availability limited. See # footnote on Page 6-239.

6. Switched Access Service (Cont'd)

6.9 Rates and Charges (Cont'd)

6.9.10 Facilities Management Service# (Cont'd)

(E) Multiplexing
- per DS0 Equivalent Channel

EF	Monthly Rates DS3/DS1	DS1/DS0
Month-to-Month		
N-MSA	$1.72	$10.00
Price Band 4	1.72	10.00
Price Band 5	1.72	10.00
Price Band 6	1.72	10.00
3 Year Plan		
N-MSA	1.46	8.50
Price Band 4	1.46	8.50
Price Band 5	1.46	8.50
Price Band 6	1.46	8.50
5 Year Plan		
N-MSA	1.20	7.00
Price Band 4	1.20	7.00
Price Band 5	1.20	7.00
Price Band 6	1.20	7.00

DT	DS3/DS1	DS1/DS0
Month-to-Month		
N-MSA	$1.72	$10.00
Price Band 4	1.72	10.00
Price Band 5	1.72	10.00
Price Band 6	1.72	10.00
3 Year Plan		
N-MSA	1.46	8.50
Price Band 4	1.46	8.50
Price Band 5	1.46	8.50
Price Band 6	1.46	8.50
5 Year Plan		
N-MSA	1.20	7.00
Price Band 4	1.20	7.00
Price Band 5	1.20	7.00
Price Band 6	1.20	7.00

Service availability limited. See # footnote on Page 6-239.

6. Switched Access Service (Cont'd)

6.9 Rates and Charges (Cont'd)

6.9.10 Facilities Management Service# (Cont'd)

(F) Administration
- per DS0 Equivalent

	Monthly Rate
(1) DS1 Interface	
Month-to-Month	
N-MSA	$3.00
Price Band 4	3.00
Price Band 5	3.00
Price Band 6	3.00
3 Year Plan	
N-MSA	3.00
Price Band 4	3.00
Price Band 5	3.00
Price Band 6	3.00
5 Year Plan	
N-MSA	3.00
Price Band 4	3.00
Price Band 5	3.00
Price Band 6	3.00
(2) DS3 Interface	
Month-to-Month	
N-MSA	0.78
Price Band 4	0.78
Price Band 5	0.78
Price Band 6	0.78
3 Year Plan	
N-MSA	0.78
Price Band 4	0.78
Price Band 5	0.78
Price Band 6	0.78
5 Year Plan	
N-MSA	0.78
Price Band 4	0.78
Price Band 5	0.78
Price Band 6	0.78

Service availability limited. See # footnote on Page 6-239.

6. Switched Access Service (Cont'd)

6.9 Rates and Charges (Cont'd)

6.9.11 Reserved

6.9.12 Common Switching and Transport Termination Optional Features and BSEs

(A) Signaling System 7 Message Waiting Indicator (SS7MWI) Signaling Service

	Monthly Rate
SS7MWI Signaling Service, per messaging arrangement	$500.00