20120814 SystemPerformanceCheck-D1750V2 SN 1050

Frequency: 1750 MHz; Duty Cycle: 1:1; Room Ambient Temperature: 24.0°C; Liquid Temperature: 23.0°C
Medium parameters used: f = 1750 MHz; σ = 1.339 mho/m; ε_r = 41.591; ρ = 1000 kg/m^3
DASY5 Configuration:
- Area Scan setting - Find Secondary Maximum Within: 2.0 dB and with a peak SAR value greater than 0.0012W/kg
- Electronics: DAE4 Sn1239; Calibrated: 6/6/2012
- Probe: EX3DV4 - SN3773; ConvF(7.89, 7.89, 7.89); Calibrated: 3/14/2012
- Sensor-Surface: 2.5mm (Mechanical Surface Detection)
- Phantom: SAM; Type: QD000P40CD; Serial: 1632

Head/Pin=100 mW/Area Scan (7x7x1): Measurement grid: dx=15mm, dy=15mm
Maximum value of SAR (measured) = 4.437 mW/g

Head/Pin=100 mW/Zoom Scan (7x7x7)/Cube 0: Measurement grid: dx=5mm, dy=5mm, dz=5mm
Reference Value = 58.602 V/m; Power Drift = -0.03 dB
Peak SAR (extrapolated) = 6.1220
SAR(1 g) = 3.4 mW/g; SAR(10 g) = 1.81 mW/g
Maximum value of SAR (measured) = 4.522 mW/g

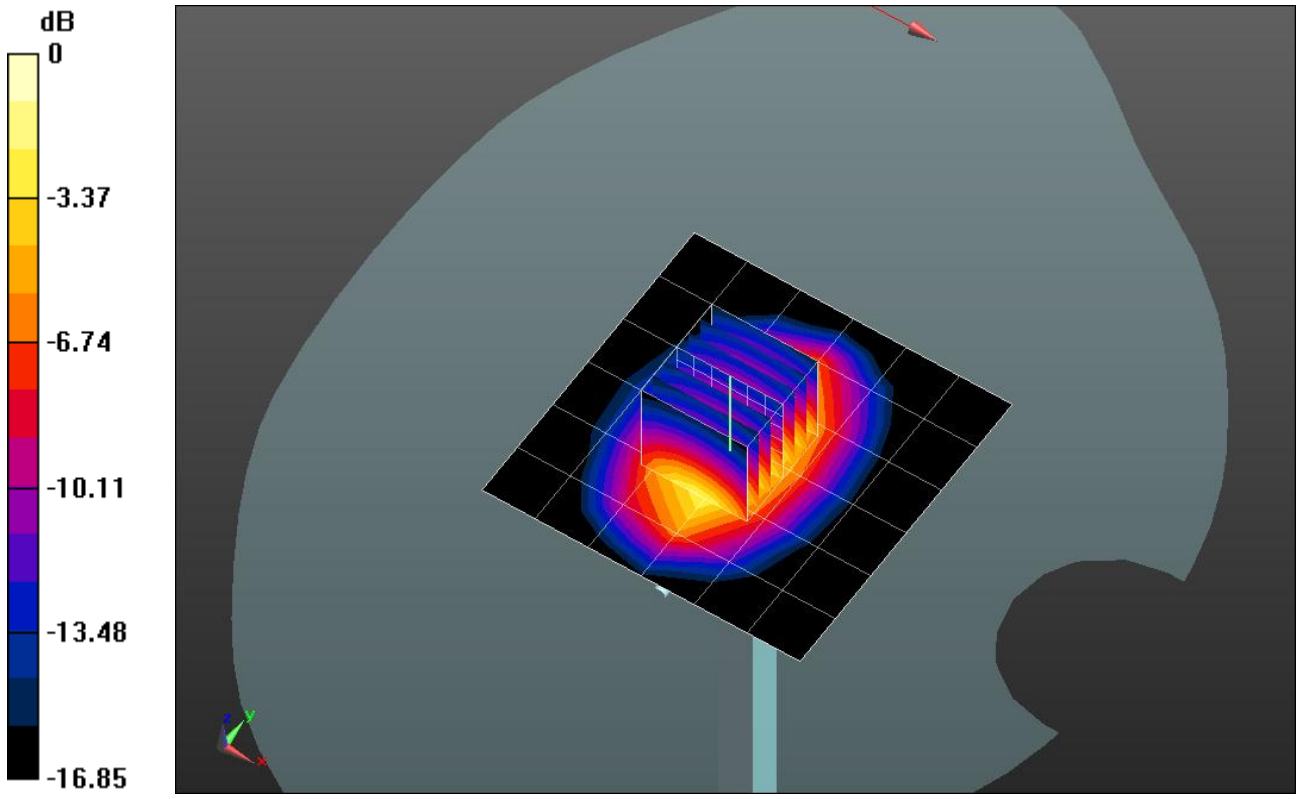

0 dB = 4.520mW/g = 13.10 dB mW/g

Test Laboratory: UL CCS SAR Lab C Date: 8/14/2012

20120814 SystemPerformanceCheck-D1750V2 SN 1050

Frequency: 1750 MHz; Duty Cycle: 1:1

Head/Pin=100 mW/Z Scan (1x1x21): Measurement grid: dx=20mm, dy=20mm, dz=5mm

Maximum value of SAR (measured) = 4.418 mW/g

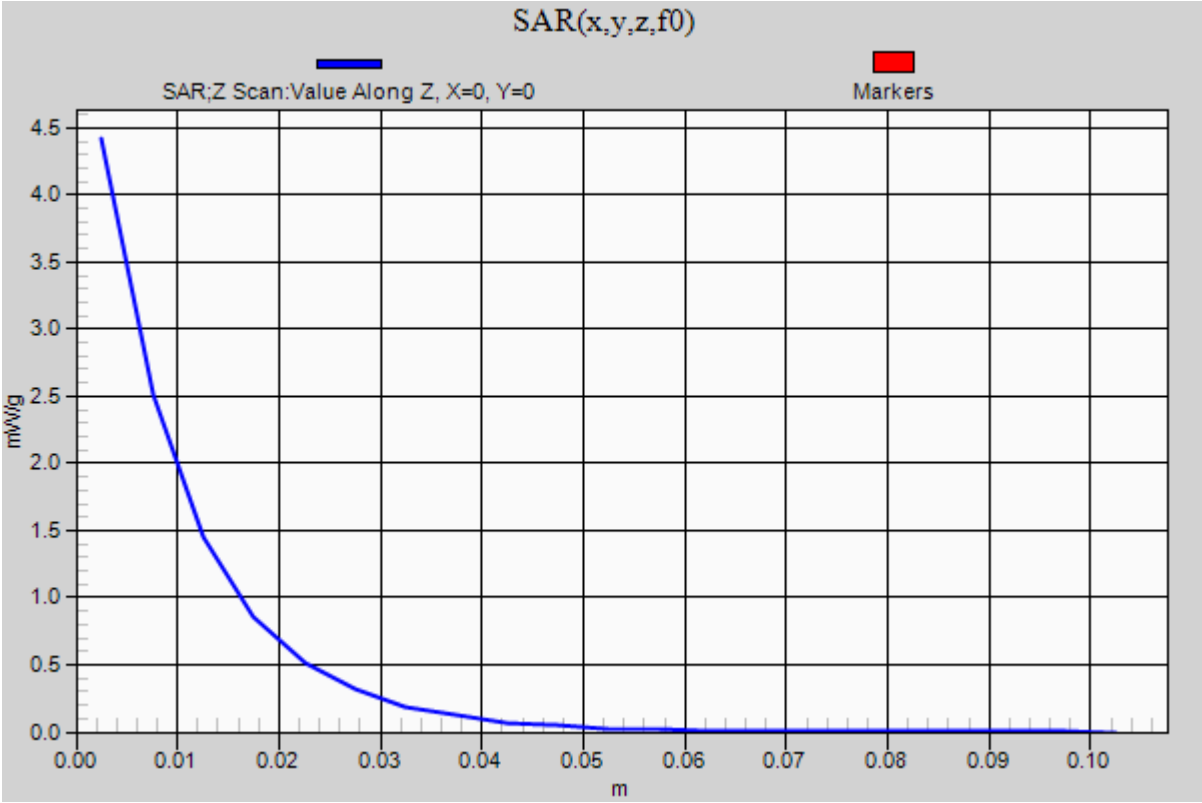

20120814 SystemPerformanceCheck-D5GHzV2 SN 1075 (5.2GHz)

Frequency: 5200 MHz; Duty Cycle: 1:1; Room Ambient Temperature: 25.0°C; Liquid Temperature: 24.0°C
Medium parameters used: f = 5200 MHz; σ = 5.337 mho/m; ε_r = 48.22; ρ = 1000 kg/m^3
DASY5 Configuration:
- Area Scan setting - Find Secondary Maximum Within: 2.0 dB and with a peak SAR value greater than 0.0012W/kg
- Electronics: DAE4 Sn1258; Calibrated: 3/8/2012
- Probe: EX3DV4 - SN3772; ConvF(4.17, 4.17, 4.17); Calibrated: 2/16/2012
- Sensor-Surface: 2.5mm (Mechanical Surface Detection (Locations From Previous Scan Used)), Sensor-Surface: 1.4mm (Mechanical Surface Detection)
- Phantom: ELI v5.0 (A); Type: QDOVA001BB; Serial: 1119

Body/5.2 GHz, Pin=100mW/Area Scan (7x7x1): Measurement grid: dx=10mm, dy=10mm
Maximum value of SAR (measured) = 12.401 mW/g

Body/5.2 GHz, Pin=100mW/Zoom Scan (8x8x7)/Cube 0: Measurement grid: dx=4mm, dy=4mm, dz=1.4mm
Reference Value = 53.555 V/m; Power Drift = -0.10 dB
Peak SAR (extrapolated) = 30.7630
SAR(1 g) = 7.83 mW/g; SAR(10 g) = 2.21 mW/g
Maximum value of SAR (measured) = 17.922 mW/g

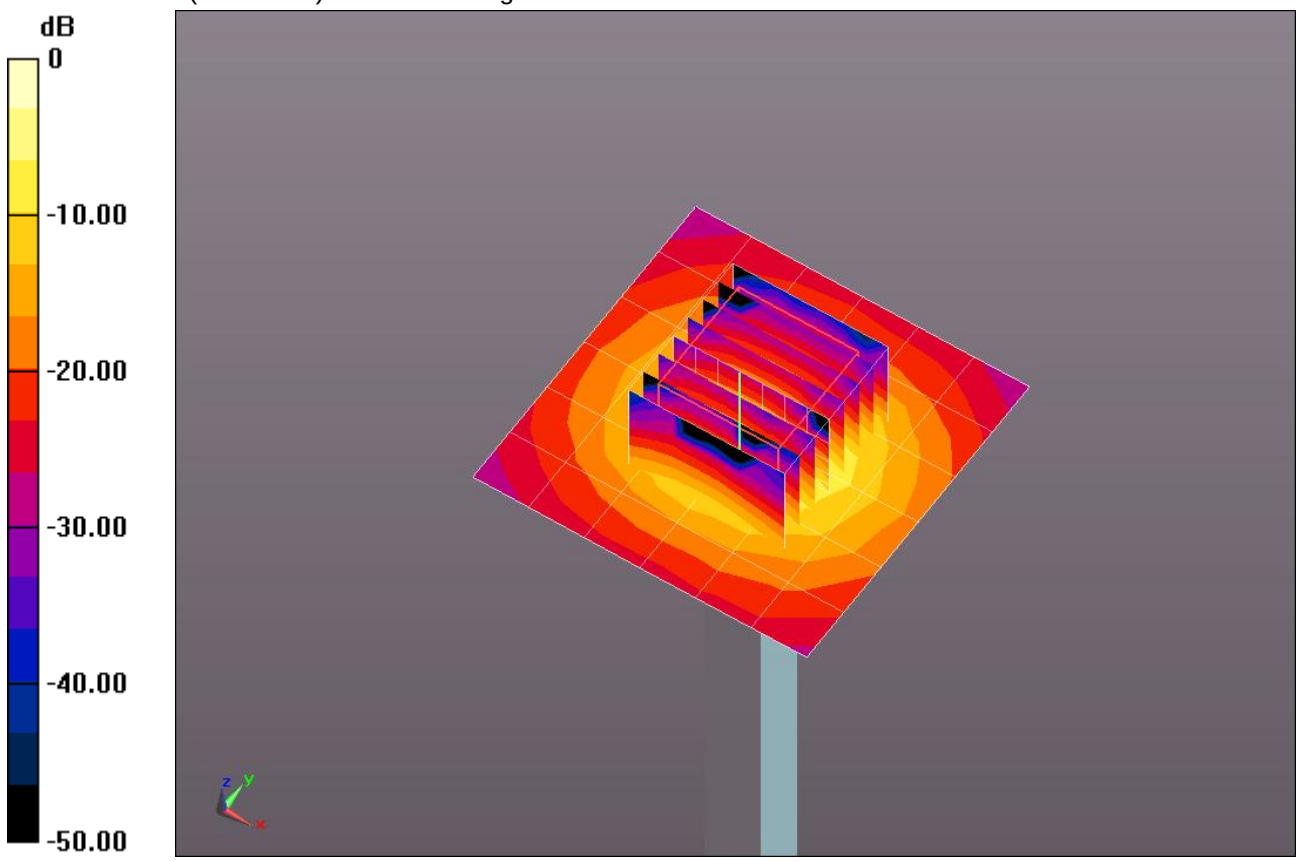

0 dB = 17.920mW/g = 25.07 dB mW/g

Test Laboratory: UL CCS SAR Lab A Date: 8/14/2012

20120814 SystemPerformanceCheck-D5GHzV2 SN 1075 (5.2GHz)

Frequency: 5200 MHz; Duty Cycle: 1:1

Body/5.2 GHz, Pin=100mW/Z Scan (1x1x21): Measurement grid: dx=20mm, dy=20mm, dz=5mm
Maximum value of SAR (measured) = 13.391 mW/g

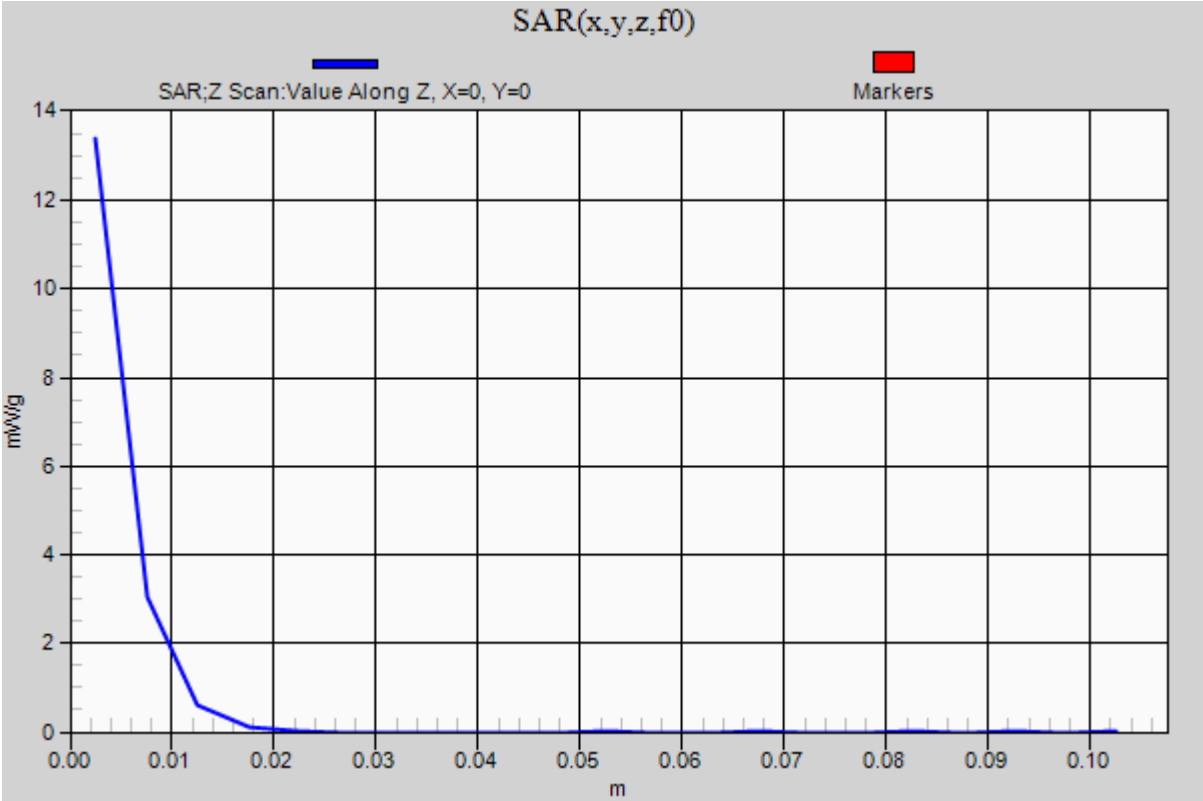

20120814 SystemPerformanceCheck-D2450V2 SN 748

Frequency: 2450 MHz; Duty Cycle: 1:1; Room Ambient Temperature: 24.0°C; Liquid Temperature: 23.0°C
Medium parameters used: f = 2450 MHz; σ = 1.941 mho/m; ε_r = 51.792; ρ = 1000 kg/m^3
DASY5 Configuration:
- Area Scan setting - Find Secondary Maximum Within: 2.0 dB and with a peak SAR value greater than 0.0012W/kg
- Electronics: DAE4 Sn1239; Calibrated: 6/6/2012
- Probe: EX3DV4 - SN3773; ConvF(6.67, 6.67, 6.67); Calibrated: 3/14/2012
- Sensor-Surface: 2.5mm (Mechanical Surface Detection)
- Phantom: ELI v5.0 (B); Type: QDOVA001BB; Serial: 1099

Body/Pin=100 mW/Area Scan (8x8x1): Measurement grid: dx=12mm, dy=12mm

Maximum value of SAR (measured) = 6.004 mW/g

Body/Pin=100 mW/Zoom Scan (7x7x7)/Cube 0: Measurement grid: dx=5mm, dy=5mm, dz=5mm

Reference Value = 60.347 V/m; Power Drift = 0.08 dB
Peak SAR (extrapolated) = 10.9590
SAR(1 g) = 5.42 mW/g; SAR(10 g) = 2.54 mW/g
Maximum value of SAR (measured) = 7.647 mW/g

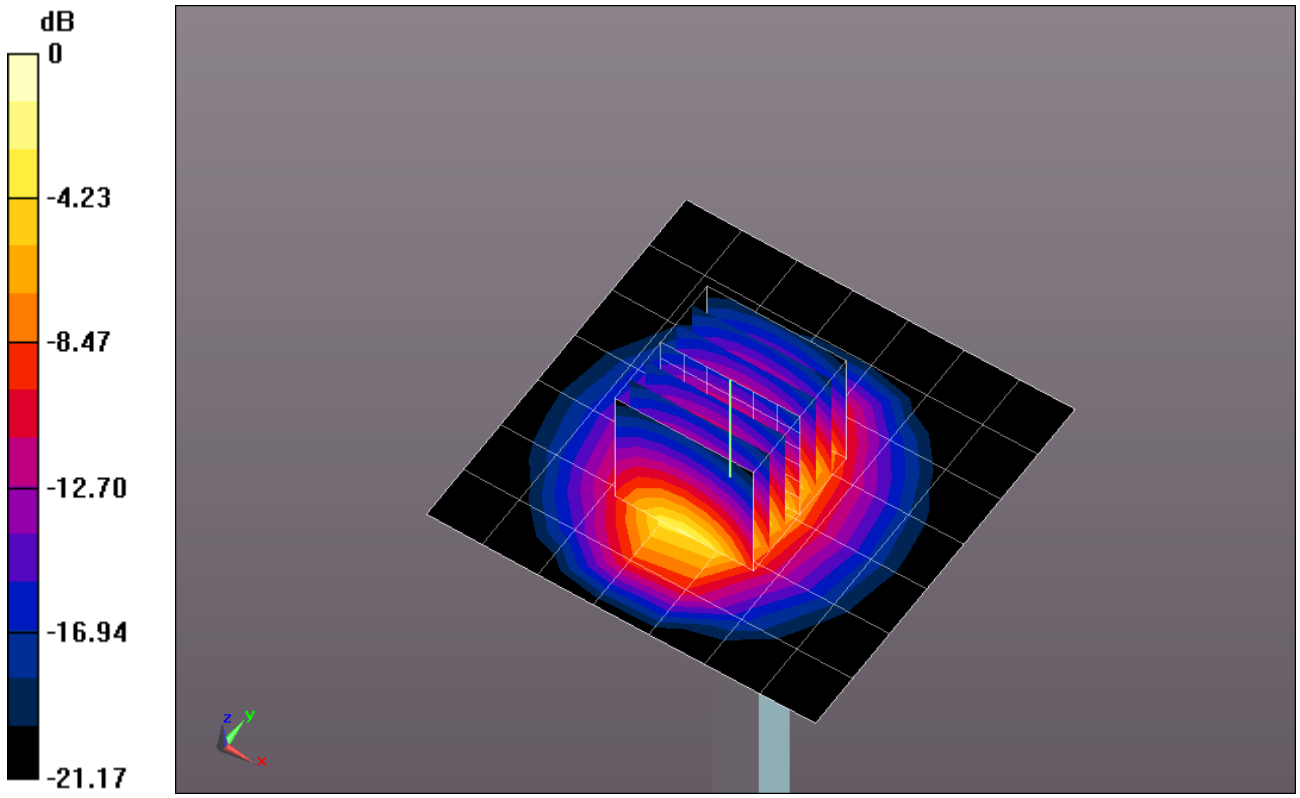

0 dB = 7.650mW/g = 17.67 dB mW/g

Test Laboratory: UL CCS SAR Lab C Date: 8/14/2012

20120814 SystemPerformanceCheck-D2450V2 SN 748

Frequency: 2450 MHz; Duty Cycle: 1:1

Body/Pin=100 mW/Z Scan (1x1x21): Measurement grid: dx=20mm, dy=20mm, dz=5mm

Maximum value of SAR (measured) = 7.074 mW/g

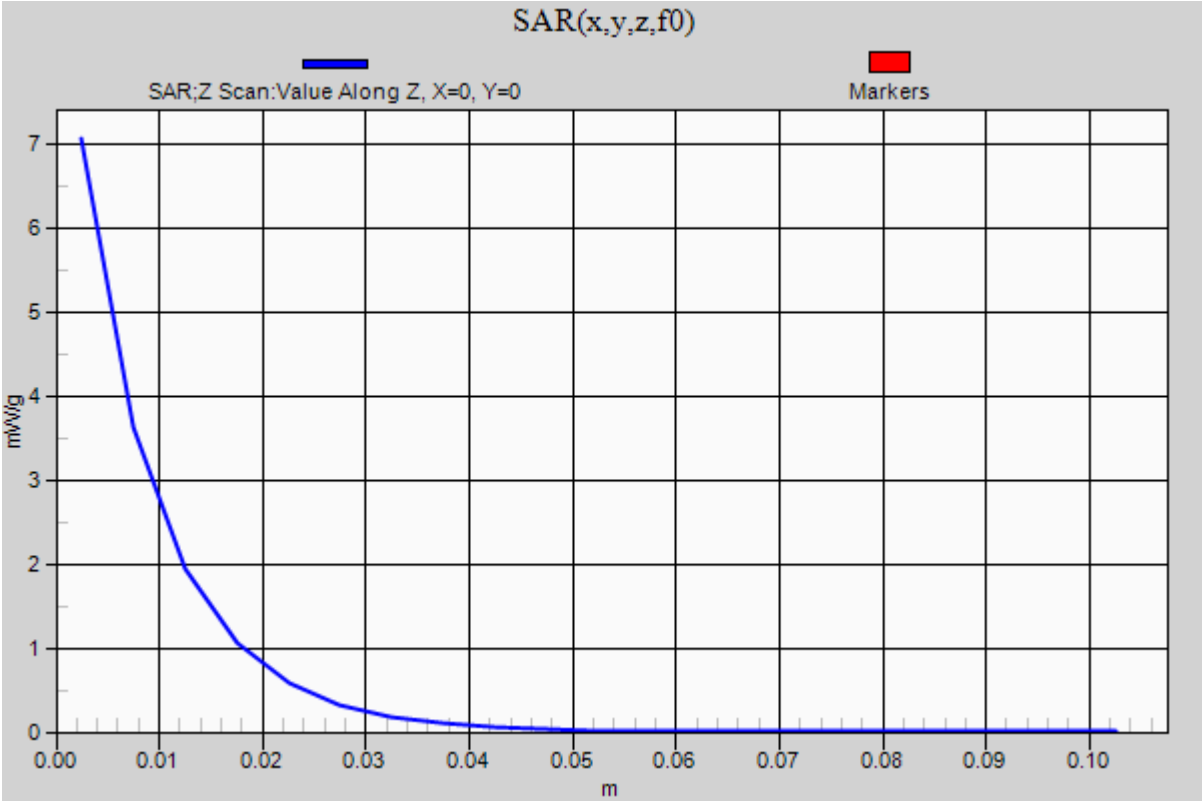

20120815 SystemPerformanceCheck-D5GHzV2 SN 1003 (5.8GHz)

Frequency: 5800 MHz; Duty Cycle: 1:1; Room Ambient Temperature: 25.0°C; Liquid Temperature: 24.0°C
Medium parameters used: f = 5800 MHz; σ = 6.03 mho/m; ε_r = 47.808; ρ = 1000 kg/m^3
DASY5 Configuration:
- Area Scan setting - Find Secondary Maximum Within: 2.0 dB and with a peak SAR value greater than 0.0012W/kg
- Electronics: DAE4 Sn1239; Calibrated: 6/6/2012
- Probe: EX3DV4 - SN3773; ConvF(3.57, 3.57, 3.57); Calibrated: 3/14/2012
- Sensor-Surface: 2.5mm (Mechanical Surface Detection), Sensor-Surface: 1.4mm (Mechanical Surface Detection)
- Phantom: ELI v5.0 (A); Type: QDOVA001BB; Serial: 1120

Body/5.8 GHz, Pin=100mW/Area Scan (7x7x1): Measurement grid: dx=10mm, dy=10mm
Maximum value of SAR (measured) = 13.953 mW/g

Body/5.8 GHz, Pin=100mW/Zoom Scan (8x8x7)/Cube 0: Measurement grid: dx=4mm, dy=4mm, dz=1.4mm
Reference Value = 52.571 V/m; Power Drift = 0.04 dB
Peak SAR (extrapolated) = 32.8840
SAR(1 g) = 7.75 mW/g; SAR(10 g) = 2.18 mW/g
Maximum value of SAR (measured) = 18.768 mW/g

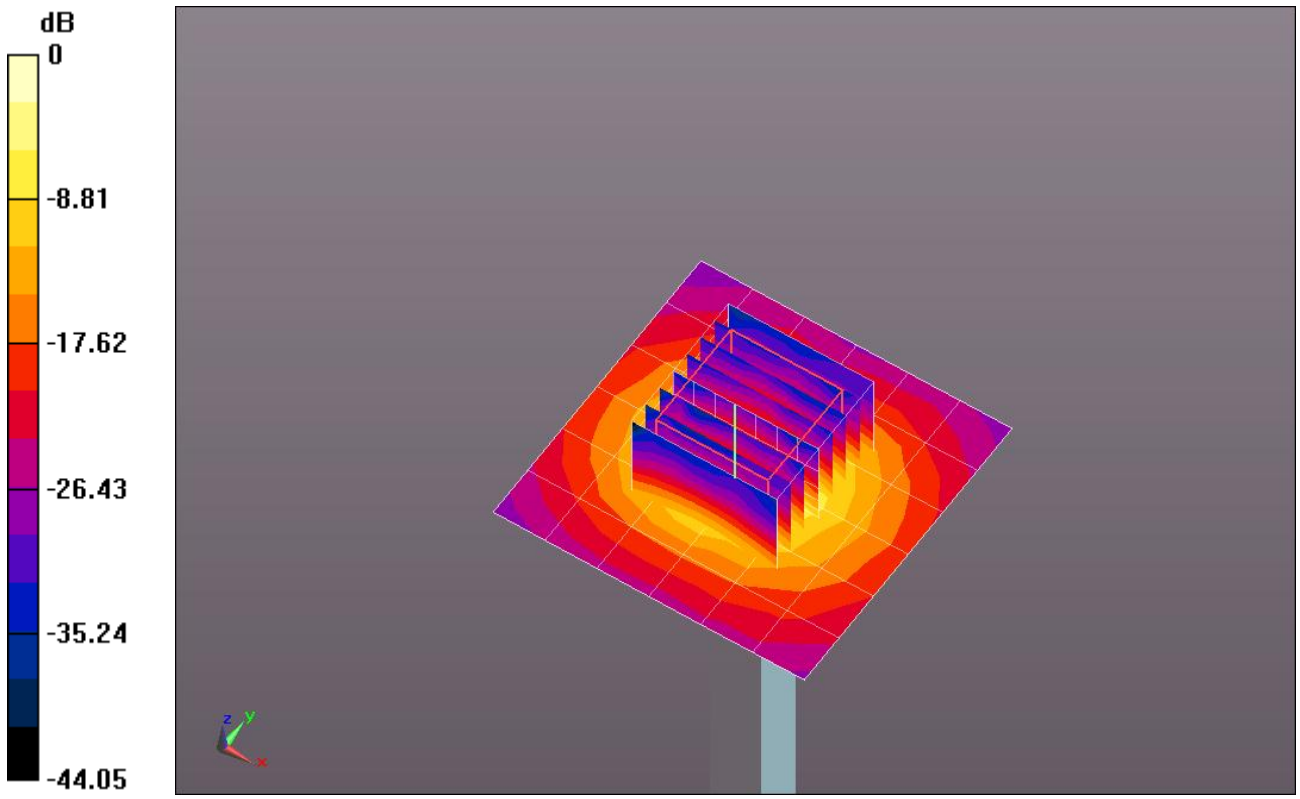

0 dB = 18.770mW/g = 25.47 dB mW/g

Test Laboratory: UL CCS SAR Lab C Date: 8/15/2012

20120815 SystemPerformanceCheck-D5GHzV2 SN 1003 (5.8GHz)

Frequency: 5800 MHz; Duty Cycle: 1:1

Body/5.8 GHz, Pin=100mW/Z Scan (1x1x21): Measurement grid: dx=20mm, dy=20mm, dz=5mm

Maximum value of SAR (measured) = 14.201 mW/g

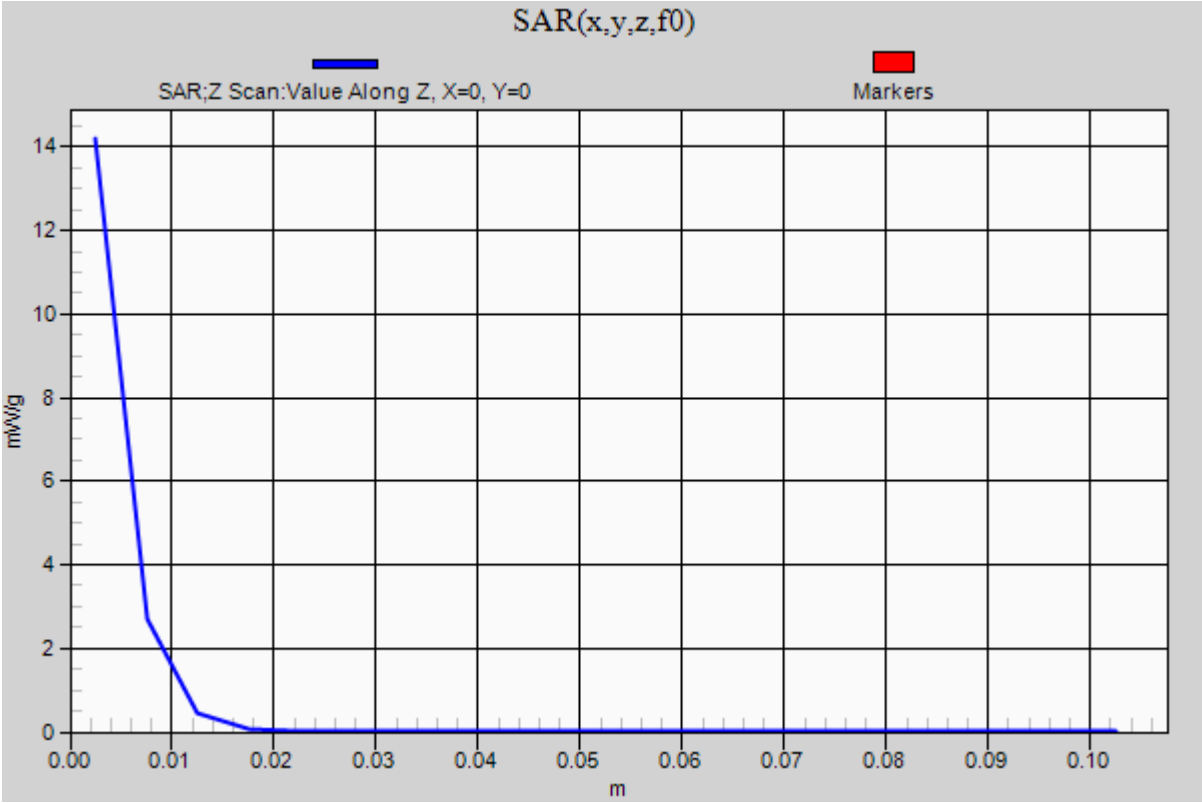

20120815 SystemPerformanceCheck-D5GHzV2 SN 1075 (5.2GHz)

Frequency: 5200 MHz; Duty Cycle: 1:1; Room Ambient Temperature: 25.0°C; Liquid Temperature: 24.0°C
Medium parameters used: f = 5200 MHz; σ = 5.318 mho/m; ε_r = 48.459; ρ = 1000 kg/m^3
DASY5 Configuration:
- Area Scan setting - Find Secondary Maximum Within: 2.0 dB and with a peak SAR value greater than 0.0012W/kg
- Electronics: DAE4 Sn1258; Calibrated: 3/8/2012
- Probe: EX3DV4 - SN3772; ConvF(4.17, 4.17, 4.17); Calibrated: 2/16/2012
- Sensor-Surface: 2.5mm (Mechanical Surface Detection), Sensor-Surface: 1.4mm (Mechanical Surface Detection)
- Phantom: ELI v5.0 (A); Type: QDOVA001BB; Serial: 1119

Body/5.2 GHz, Pin=100mW/Area Scan (7x7x1): Measurement grid: dx=10mm, dy=10mm

Maximum value of SAR (measured) = 12.724 mW/g

Body/5.2 GHz, Pin=100mW/Zoom Scan (8x8x7)/Cube 0: Measurement grid: dx=4mm, dy=4mm, dz=1.4mm

Reference Value = 52.720 V/m; Power Drift = -0.020 dB
Peak SAR (extrapolated) = 29.3880
SAR(1 g) = 7.52 mW/g; SAR(10 g) = 2.13 mW/g
Maximum value of SAR (measured) = 17.502 mW/g

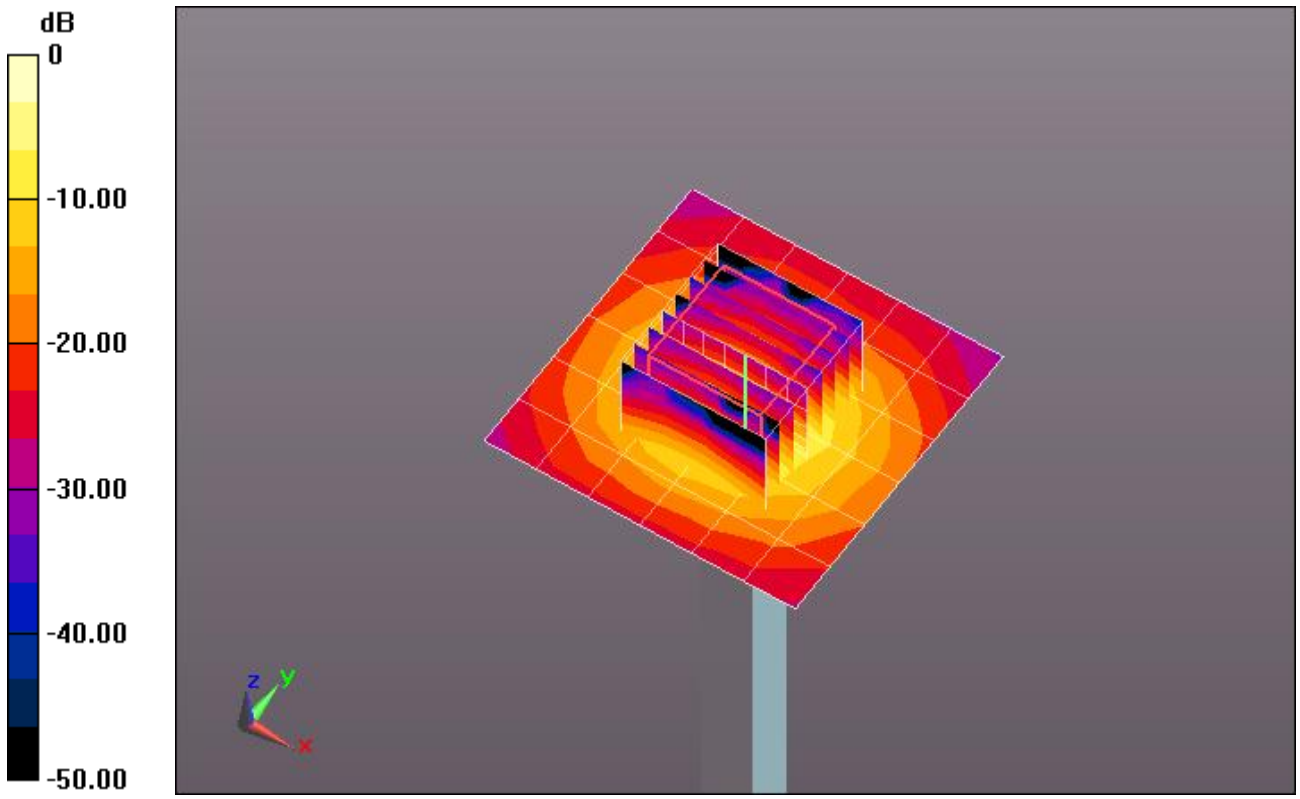

0 dB = 17.500mW/g = 24.86 dB mW/g

Test Laboratory: UL CCS SAR Lab A Date: 8/15/2012

20120815 SystemPerformanceCheck-D5GHzV2 SN 1075 (5.2GHz)

Frequency: 5200 MHz; Duty Cycle: 1:1

Body/5.2 GHz, Pin=100mW/Z Scan (1x1x21): Measurement grid: dx=20mm, dy=20mm, dz=5mm
Maximum value of SAR (measured) = 12.541 mW/g

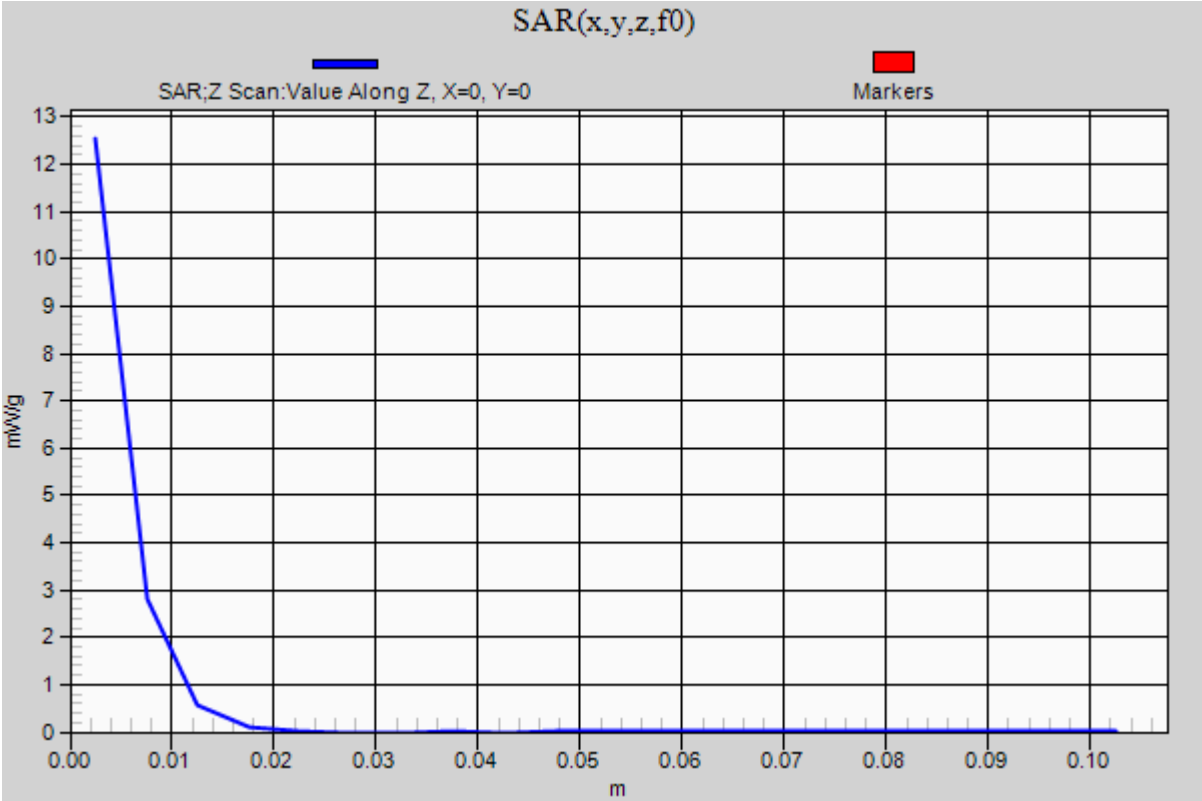

Test Laboratory: UL CCS SAR Lab A Date: 8/15/2012

20120815 SystemPerformanceCheck-D2450V2 SN 748

Frequency: 2450 MHz; Duty Cycle: 1:1; Room Ambient Temperature: 24.0°C; Liquid Temperature: 23.0°C
Medium parameters used: f = 2450 MHz; σ = 1.845 mho/m; ε_r = 38.173; ρ = 1000 kg/m^3
DASY5 Configuration:
- Area Scan setting - Find Secondary Maximum Within: 2.0 dB and with a peak SAR value greater than 0.0012W/kg
- Electronics: DAE4 Sn1258; Calibrated: 3/8/2012
- Probe: EX3DV4 - SN3772; ConvF(6.43, 6.43, 6.43); Calibrated: 5/3/2011
- Sensor-Surface: 2.5mm (Mechanical Surface Detection)
- Phantom: SAM v5.0 (B); Type: QD000P40CD; Serial: 1628

Head/Pin=100 mW/Area Scan (8x8x1): Measurement grid: dx=12mm, dy=12mm
Maximum value of SAR (measured) = 7.657 mW/g

Head/Pin=100 mW/Zoom Scan (7x7x7)/Cube 0: Measurement grid: dx=5mm, dy=5mm, dz=5mm
Reference Value = 63.328 V/m; Power Drift = 0.09 dB
Peak SAR (extrapolated) = 12.1740
SAR(1 g) = 5.73 mW/g; SAR(10 g) = 2.63 mW/g
Maximum value of SAR (measured) = 8.203 mW/g

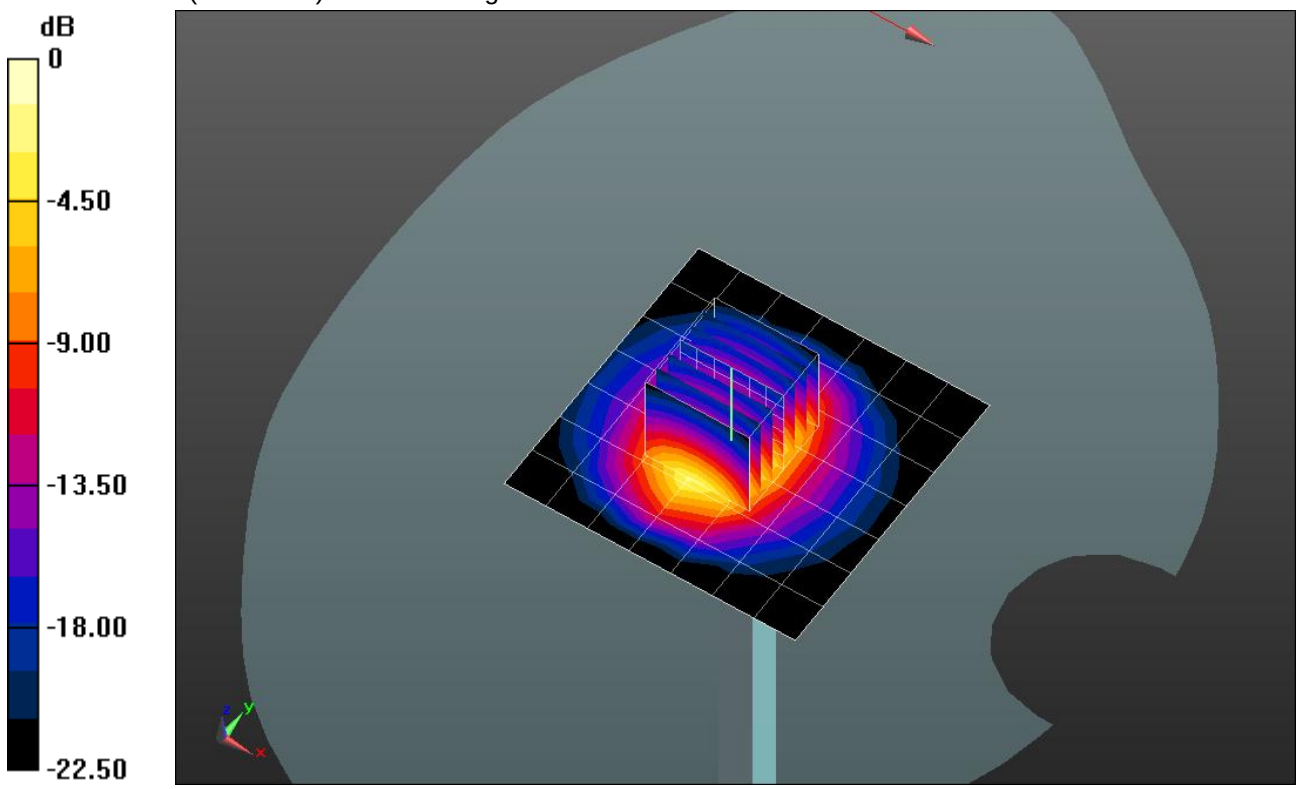

0 dB = 8.200mW/g = 18.28 dB mW/g

Test Laboratory: UL CCS SAR Lab A Date: 8/15/2012

20120815 SystemPerformanceCheck-D2450V2 SN 748

Frequency: 2450 MHz; Duty Cycle: 1:1

Head/Pin=100 mW/Z Scan (1x1x21): Measurement grid: dx=20mm, dy=20mm, dz=5mm

Maximum value of SAR (measured) = 7.226 mW/g

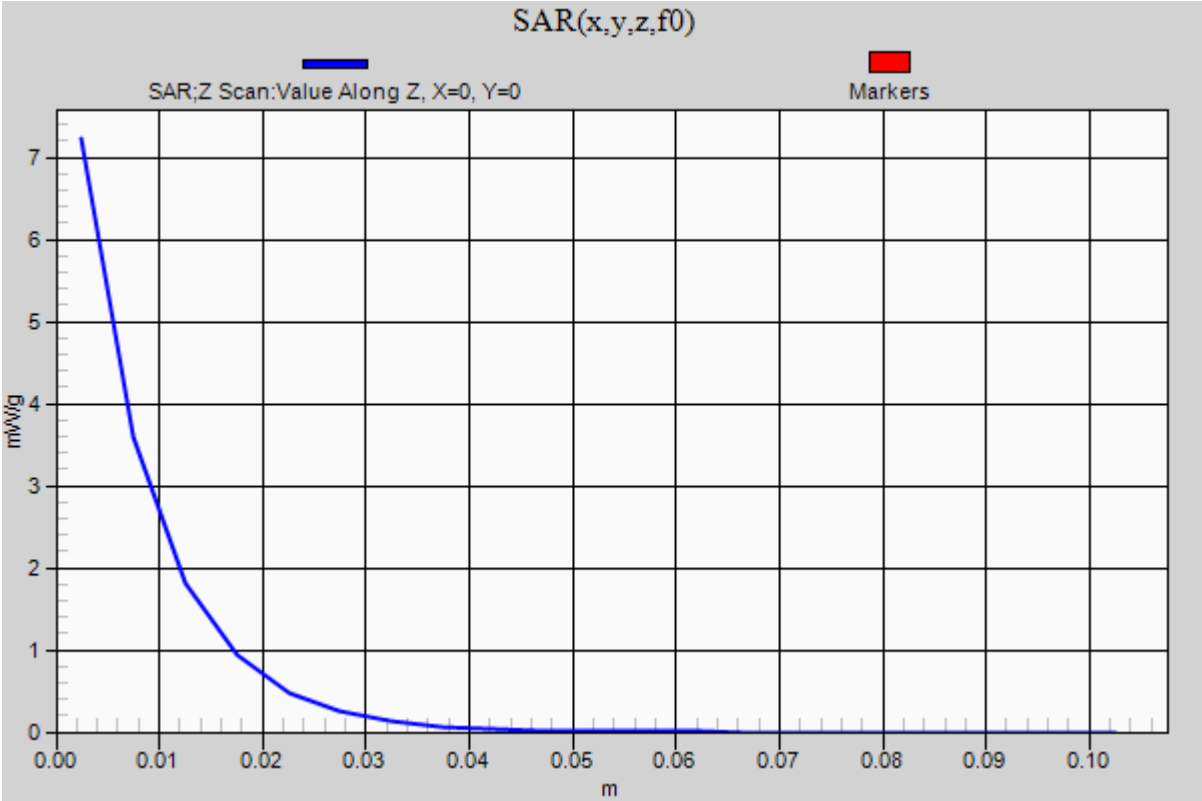

20120816 SystemPerformanceCheck-D1900V2 SN 5d140

Frequency: 1900 MHz; Duty Cycle: 1:1; Room Ambient Temperature: 24.0°C; Liquid Temperature: 23.0°C
Medium parameters used: f = 1900 MHz; σ = 1.39 mho/m; ε_r = 39.798; ρ = 1000 kg/m^3
DASY5 Configuration:
- Area Scan setting - Find Secondary Maximum Within: 2.0 dB and with a peak SAR value greater than 0.0012W/kg
- Electronics: DAE4 Sn1239; Calibrated: 6/6/2012
- Probe: EX3DV4 - SN3773; ConvF(7.51, 7.51, 7.51); Calibrated: 3/14/2012
- Sensor-Surface: 2.5mm (Mechanical Surface Detection)
- Phantom: SAM; Type: QD000P40CD; Serial: 1632

Head/Pin=100 mW/Area Scan (7x7x1): Measurement grid: dx=15mm, dy=15mm
Maximum value of SAR (measured) = 4.877 mW/g

Head/Pin=100 mW/Zoom Scan (7x7x7)/Cube 0: Measurement grid: dx=5mm, dy=5mm, dz=5mm
Reference Value = 60.462 V/m; Power Drift = 0.05 dB
Peak SAR (extrapolated) = 6.8040
SAR(1 g) = 3.81 mW/g; SAR(10 g) = 2.01 mW/g
Maximum value of SAR (measured) = 5.118 mW/g

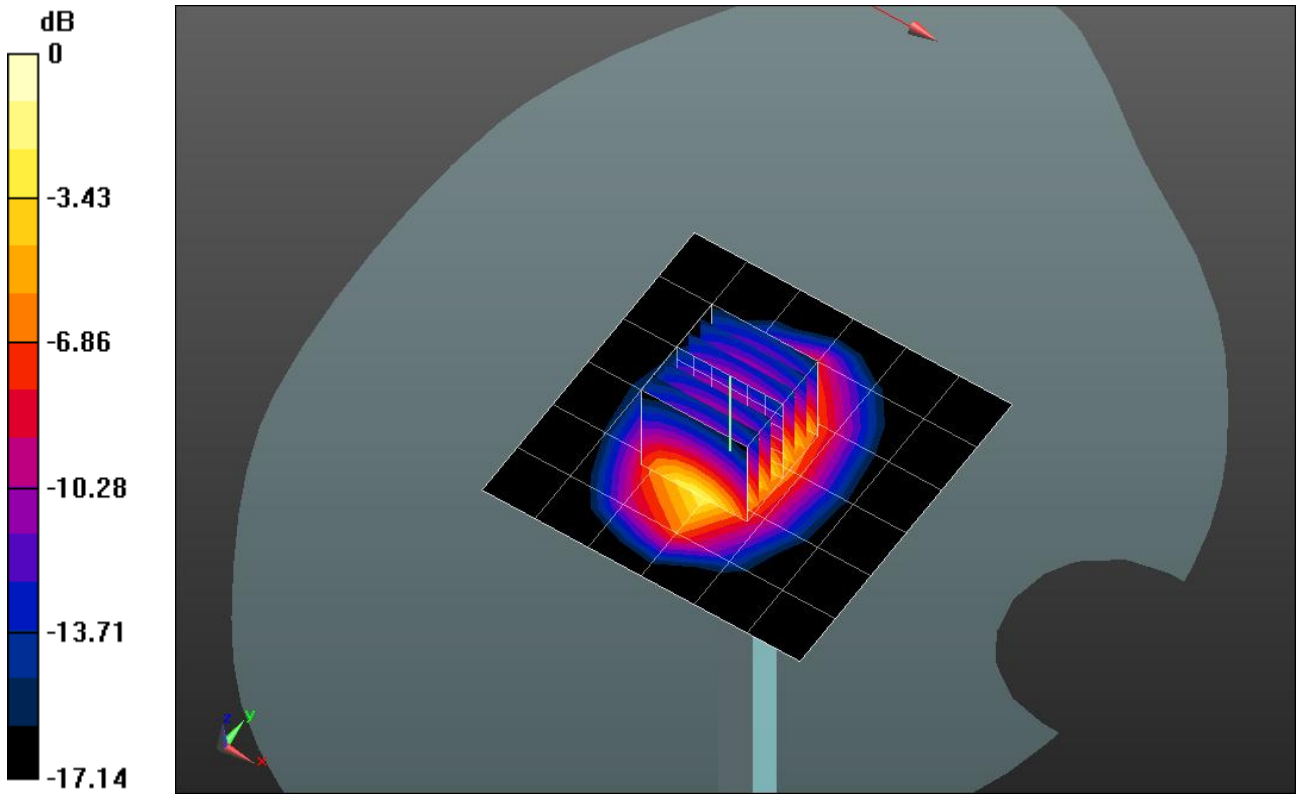

0 dB = 5.120mW/g = 14.19 dB mW/g

Test Laboratory: UL CCS SAR Lab C Date: 8/16/2012

20120816 SystemPerformanceCheck-D1900V2 SN 5d140

Frequency: 1900 MHz; Duty Cycle: 1:1

Head/Pin=100 mW/Z Scan (1x1x21): Measurement grid: dx=20mm, dy=20mm, dz=5mm

Maximum value of SAR (measured) = 4.909 mW/g

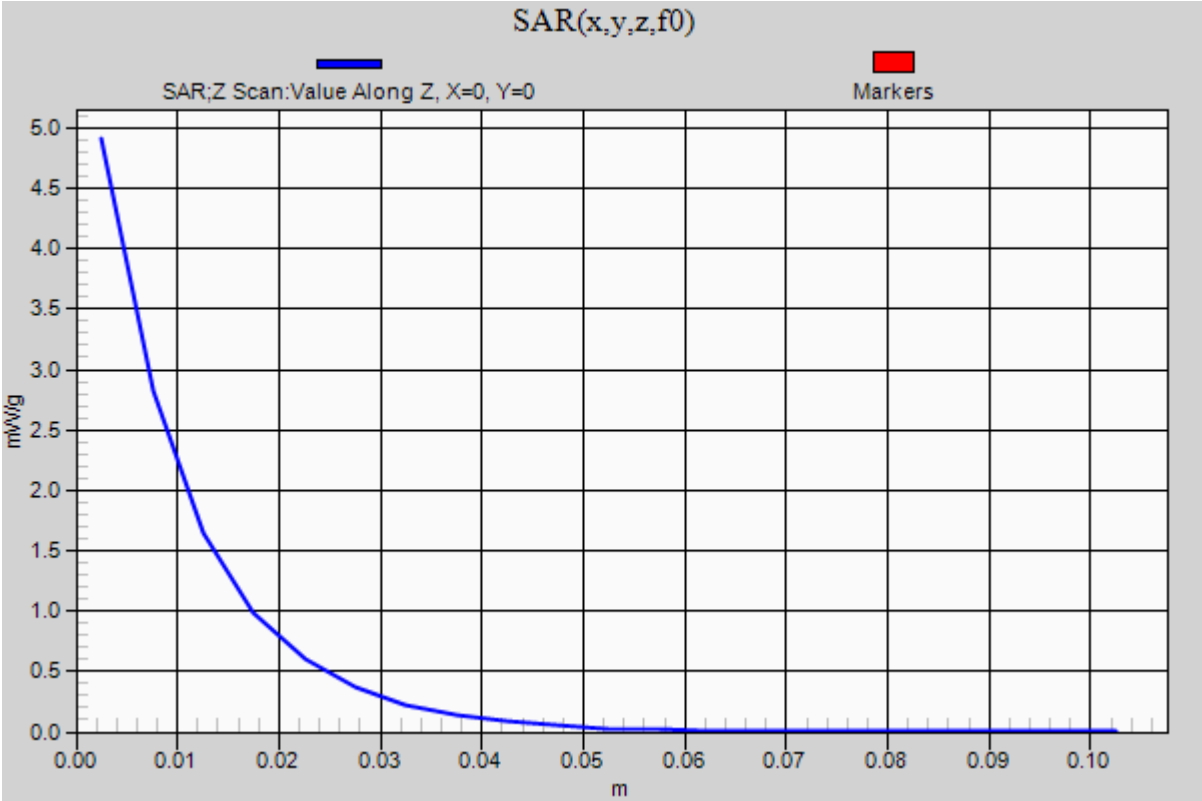

20120817 SystemPerformanceCheck-D835V2 SN 4d002

Frequency: 835 MHz; Duty Cycle: 1:1; Room Ambient Temperature: 24.0°C; Liquid Temperature: 23.0°C
Medium parameters used: f = 835 MHz; σ = 0.903 mho/m; ε_r = 42.938; ρ = 1000 kg/m^3
DASY5 Configuration:
- Area Scan setting - Find Secondary Maximum Within: 2.0 dB and with a peak SAR value greater than 0.0012W/kg
- Electronics: DAE4 Sn1239; Calibrated: 6/6/2012
- Probe: EX3DV4 - SN3773; ConvF(8.79, 8.79, 8.79); Calibrated: 3/14/2012
- Sensor-Surface: 2.5mm (Mechanical Surface Detection)
- Phantom: SAM; Type: QD000P40CD; Serial: 1632

Head/Pin=100 mW/Area Scan (7x7x1): Measurement grid: dx=15mm, dy=15mm
Maximum value of SAR (measured) = 1.150 mW/g

Head/Pin=100 mW/Zoom Scan (7x7x7)/Cube 0: Measurement grid: dx=5mm, dy=5mm, dz=5mm
Reference Value = 36.161 V/m; Power Drift = 0.03 dB
Peak SAR (extrapolated) = 1.4880
SAR(1 g) = 0.984 mW/g; SAR(10 g) = 0.643 mW/g
Maximum value of SAR (measured) = 1.204 mW/g

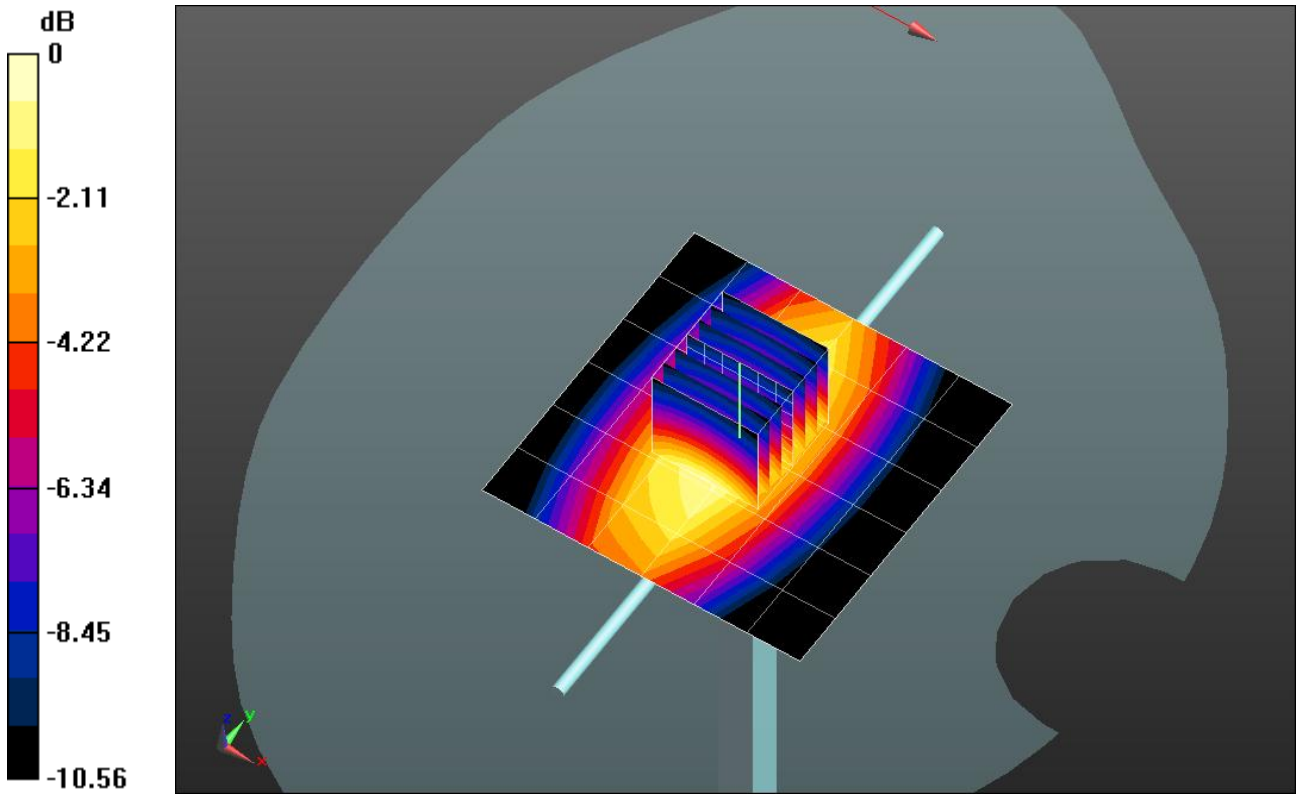

0 dB = 1.200mW/g = 1.58 dB mW/g

Test Laboratory: UL CCS SAR Lab C Date: 8/17/2012

20120817 SystemPerformanceCheck-D835V2 SN 4d002

Frequency: 835 MHz; Duty Cycle: 1:1

Head/Pin=100 mW/Z Scan (1x1x21): Measurement grid: dx=20mm, dy=20mm, dz=5mm

Maximum value of SAR (measured) = 1.155 mW/g

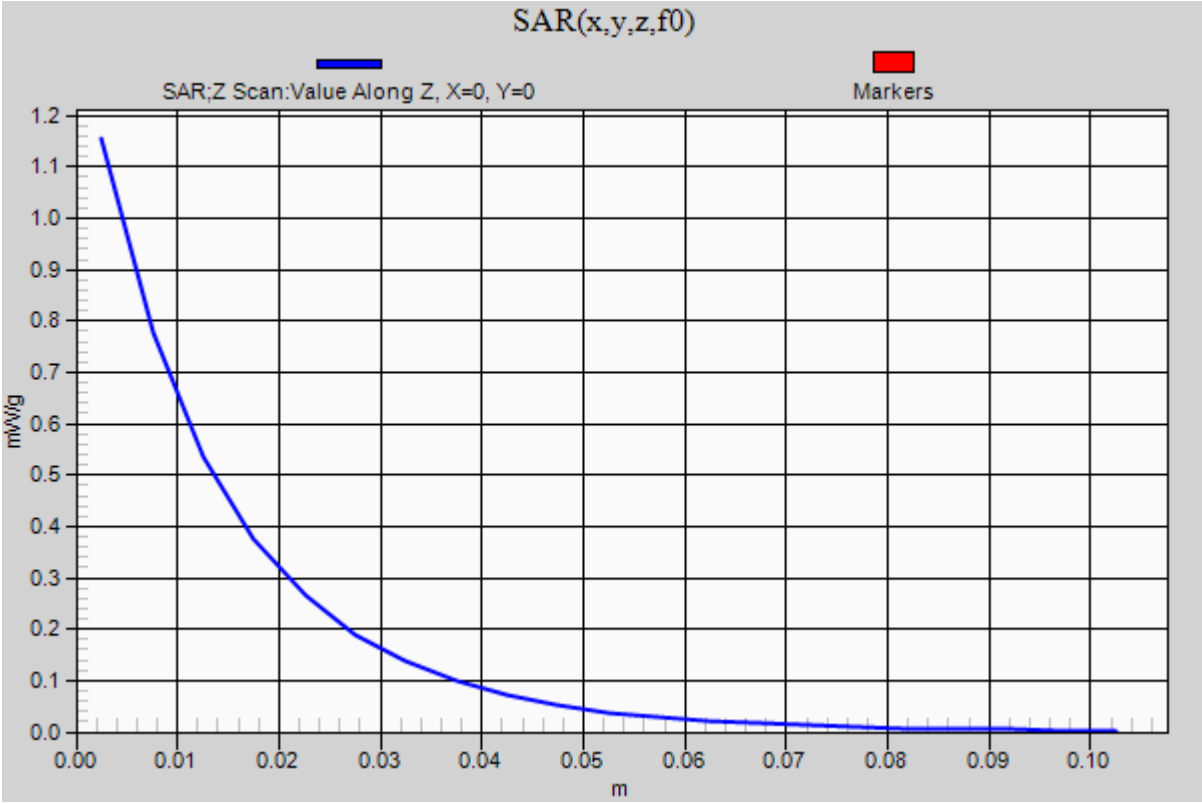

20120817 SystemPerformanceCheck-D1900V2 SN 5d140

Frequency: 1900 MHz; Duty Cycle: 1:1; Room Ambient Temperature: 24.0°C; Liquid Temperature: 23.0°C
Medium parameters used: f = 1900 MHz; σ = 1.543 mho/m; ε_r = 53.113; ρ = 1000 kg/m^3
DASY5 Configuration:
- Area Scan setting - Find Secondary Maximum Within: 2.0 dB and with a peak SAR value greater than 0.0012W/kg
- Electronics: DAE4 Sn1239; Calibrated: 6/6/2012
- Probe: EX3DV4 - SN3773; ConvF(7.11, 7.11, 7.11); Calibrated: 3/14/2012
- Sensor-Surface: 2.5mm (Mechanical Surface Detection (Locations From Previous Scan Used)), Sensor-Surface: 2.5mm (Mechanical Surface Detection)
- Phantom: ELI v5.0 (B); Type: QDOVA001BB; Serial: 1099

Body/Pin=100 mW/Area Scan (7x7x1): Measurement grid: dx=15mm, dy=15mm
Maximum value of SAR (measured) = 5.297 mW/g

Body/Pin=100 mW/Zoom Scan (7x7x7)/Cube 0: Measurement grid: dx=5mm, dy=5mm, dz=5mm
Reference Value = 59.136 V/m; Power Drift = 0.11 dB
Peak SAR (extrapolated) = 7.4350
SAR(1 g) = 4.12 mW/g; SAR(10 g) = 2.17 mW/g
Maximum value of SAR (measured) = 5.458 mW/g

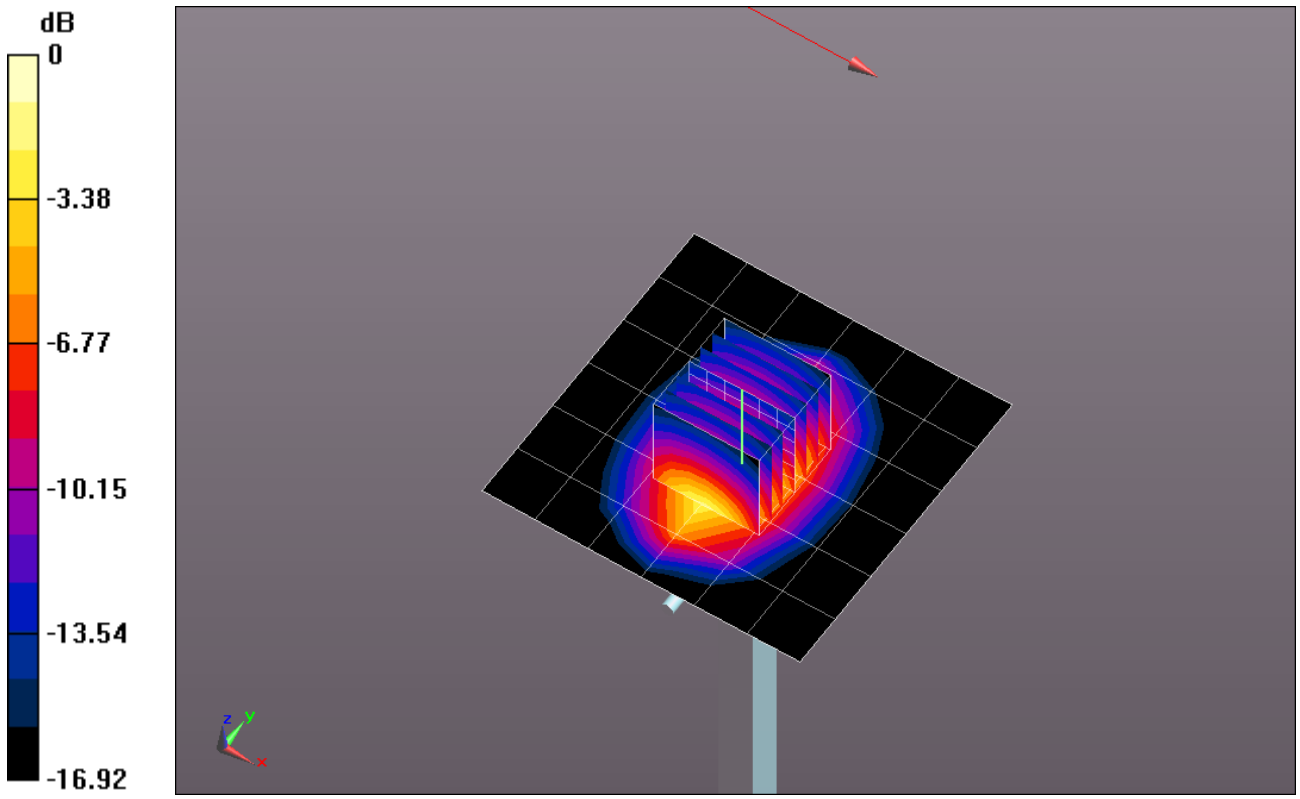

0 dB = 5.460mW/g = 14.74 dB mW/g

Test Laboratory: UL CCS SAR Lab C Date: 8/17/2012

20120817 SystemPerformanceCheck-D1900V2 SN 5d140

Frequency: 1900 MHz; Duty Cycle: 1:1

Body/Pin=100 mW/Z Scan (1x1x21): Measurement grid: dx=20mm, dy=20mm, dz=5mm

Maximum value of SAR (measured) = 5.467 mW/g

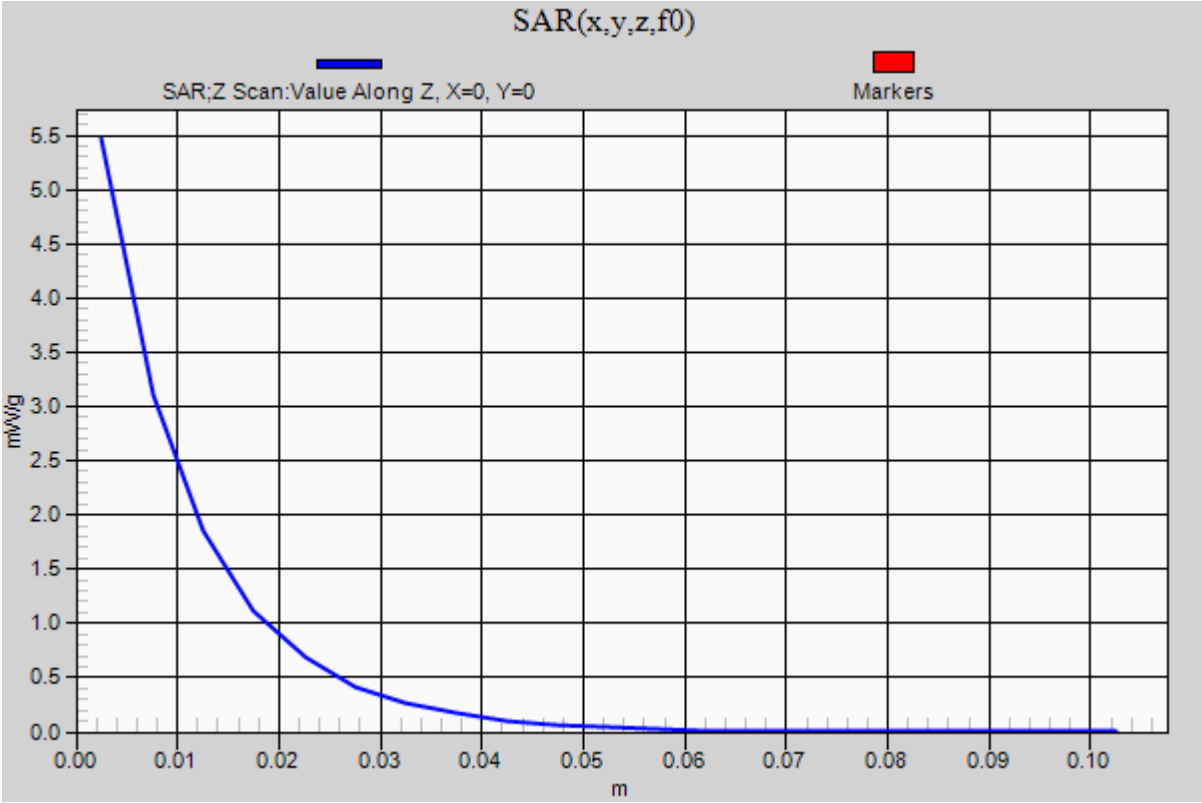

20120819 SystemPerformanceCheck-D835V2 SN 4d002

Frequency: 835 MHz; Duty Cycle: 1:1; Room Ambient Temperature: 24.0°C; Liquid Temperature: 23.0°C
Medium parameters used: f = 835 MHz; σ = 0.99 mho/m; ε_r = 55.734; ρ = 1000 kg/m^3
DASY5 Configuration:
- Area Scan setting - Find Secondary Maximum Within: 2.0 dB and with a peak SAR value greater than 0.0012W/kg
- Electronics: DAE4 Sn1239; Calibrated: 6/6/2012
- Probe: EX3DV4 - SN3773; ConvF(8.74, 8.74, 8.74); Calibrated: 3/14/2012
- Sensor-Surface: 2.5mm (Mechanical Surface Detection (Locations From Previous Scan Used)), Sensor-Surface: 2.5mm (Mechanical Surface Detection)
- Phantom: ELI v5.0 (B); Type: QDOVA001BB; Serial: 1099

Body/Pin=100 mW/Area Scan (7x7x1): Measurement grid: dx=15mm, dy=15mm

Maximum value of SAR (measured) = 1.123 mW/g

Body/Pin=100 mW/Zoom Scan (7x7x7)/Cube 0: Measurement grid: dx=5mm, dy=5mm, dz=5mm

Reference Value = 34.320 V/m; Power Drift = -0.0084 dB
Peak SAR (extrapolated) = 1.4000
SAR(1 g) = 0.949 mW/g; SAR(10 g) = 0.625 mW/g
Maximum value of SAR (measured) = 1.151 mW/g

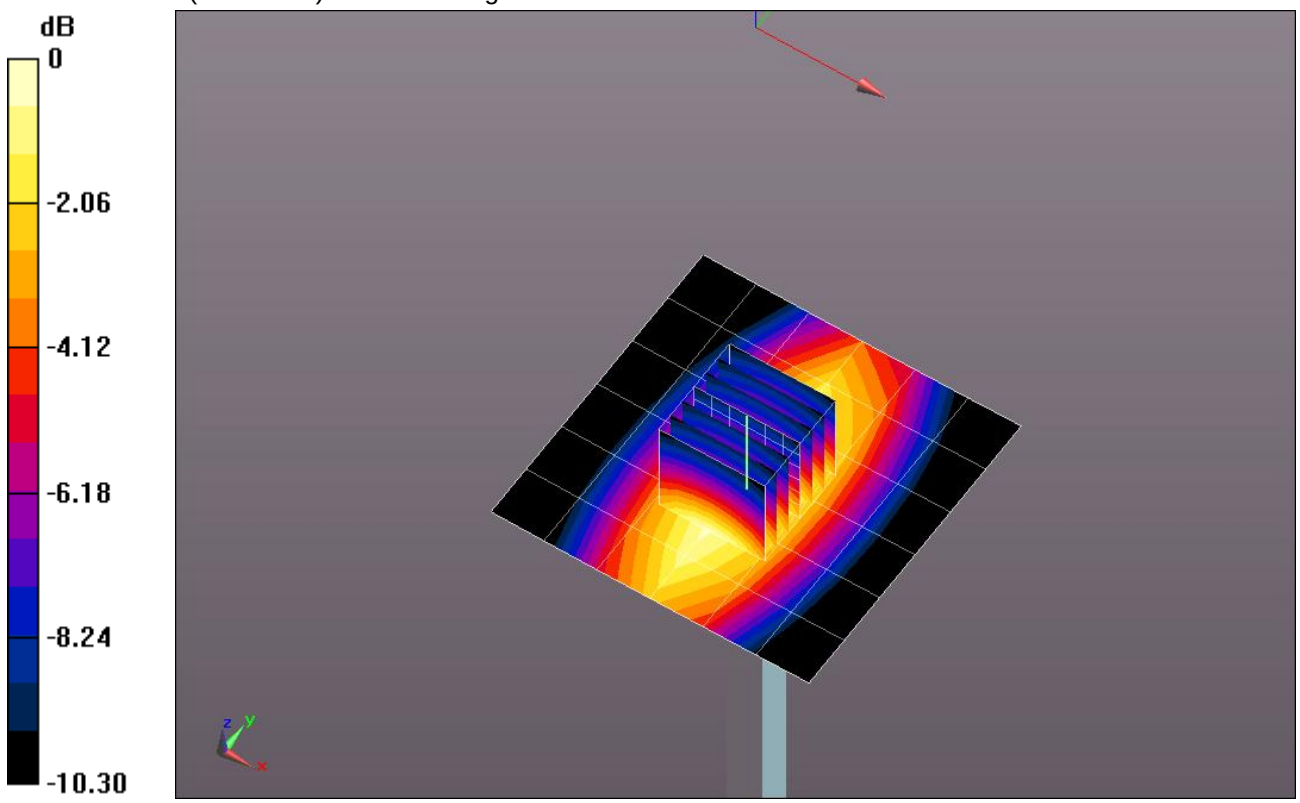

0 dB = 1.150mW/g = 1.21 dB mW/g

Test Laboratory: UL CCS SAR Lab C Date: 8/19/2012

20120819 SystemPerformanceCheck-D835V2 SN 4d002

Frequency: 835 MHz; Duty Cycle: 1:1

Body/Pin=100 mW/Z Scan (1x1x21): Measurement grid: dx=20mm, dy=20mm, dz=5mm
Maximum value of SAR (measured) = 1.132 mW/g

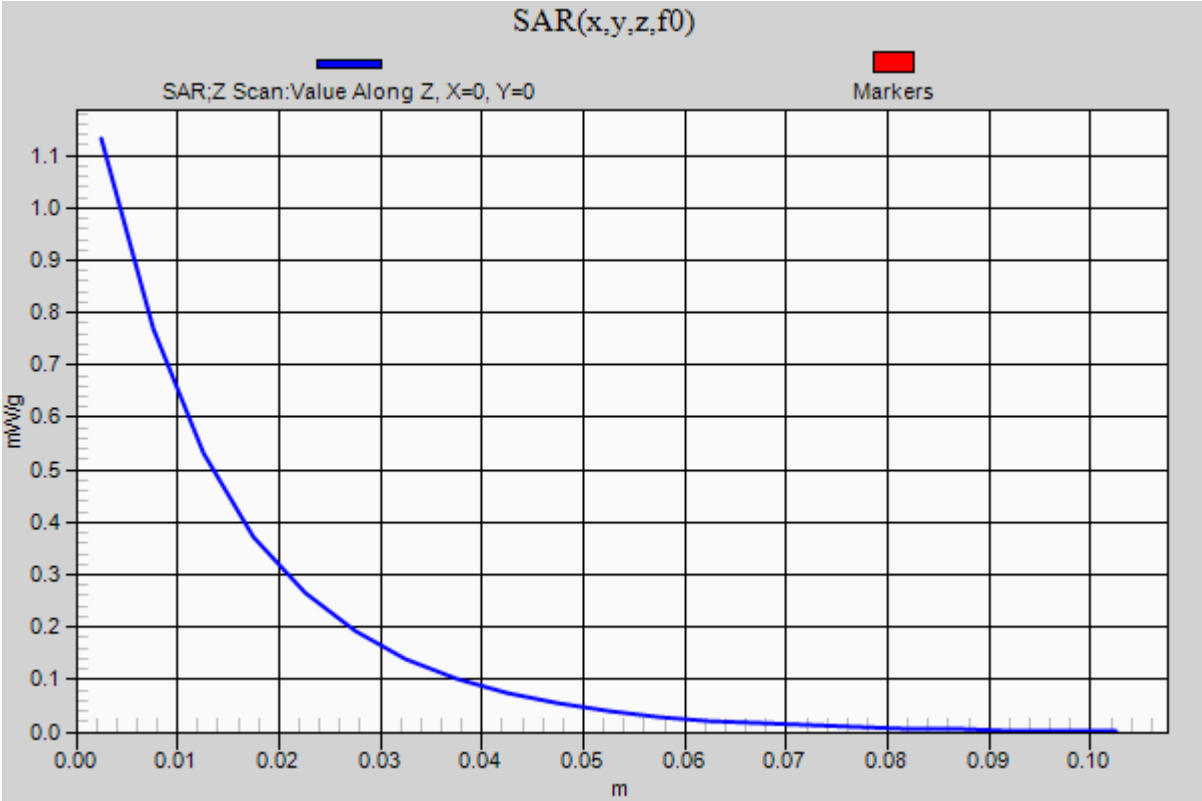

Test Laboratory: UL CCS SAR Lab A Date: 8/19/2012

20120819 SystemPerformanceCheck-D5GHzV2 SN 1075 (5.5GHz)

Frequency: 5500 MHz; Duty Cycle: 1:1; Room Ambient Temperature: 25.0°C; Liquid Temperature: 24.0°C
Medium parameters used: f = 5500 MHz; σ = 5.665 mho/m; ε_r = 48.115; ρ = 1000 kg/m^3
DASY5 Configuration:
- Area Scan setting - Find Secondary Maximum Within: 2.0 dB and with a peak SAR value greater than 0.0012W/kg
- Electronics: DAE4 Sn1258; Calibrated: 3/8/2012
- Probe: EX3DV4 - SN3772; ConvF(3.49, 3.49, 3.49); Calibrated: 2/16/2012
- Sensor-Surface: 2.5mm (Mechanical Surface Detection), Sensor-Surface: 1.4mm (Mechanical Surface Detection)
- Phantom: ELI v5.0 (A); Type: QDOVA001BB; Serial: 1119

Body/5.5 GHz, Pin=100mW/Area Scan (7x7x1): Measurement grid: dx=10mm, dy=10mm
Maximum value of SAR (measured) = 13.773 mW/g

Body/5.5 GHz, Pin=100mW/Zoom Scan (8x8x7)/Cube 0: Measurement grid: dx=4mm, dy=4mm, dz=1.4mm
Reference Value = 54.024 V/m; Power Drift = -0.09 dB
Peak SAR (extrapolated) = 31.5040
SAR(1 g) = 8.24 mW/g; SAR(10 g) = 2.32 mW/g
Maximum value of SAR (measured) = 19.528 mW/g

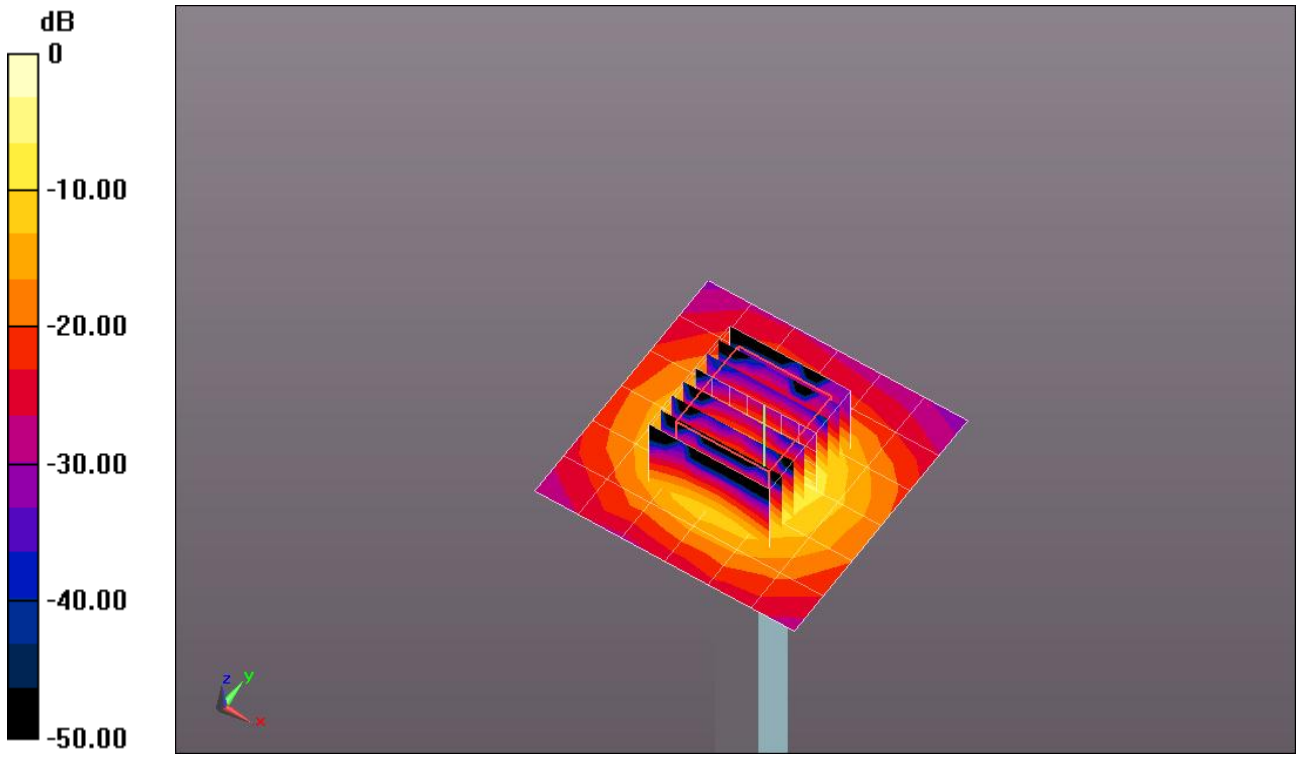

0 dB = 19.530mW/g = 25.81 dB mW/g

Test Laboratory: UL CCS SAR Lab A Date: 8/19/2012

20120819 SystemPerformanceCheck-D5GHzV2 SN 1075 (5.5GHz)

Frequency: 5500 MHz; Duty Cycle: 1:1

Body/5.5 GHz, Pin=100mW/Z Scan (1x1x21): Measurement grid: dx=20mm, dy=20mm, dz=5mm
Maximum value of SAR (measured) = 13.822 mW/g

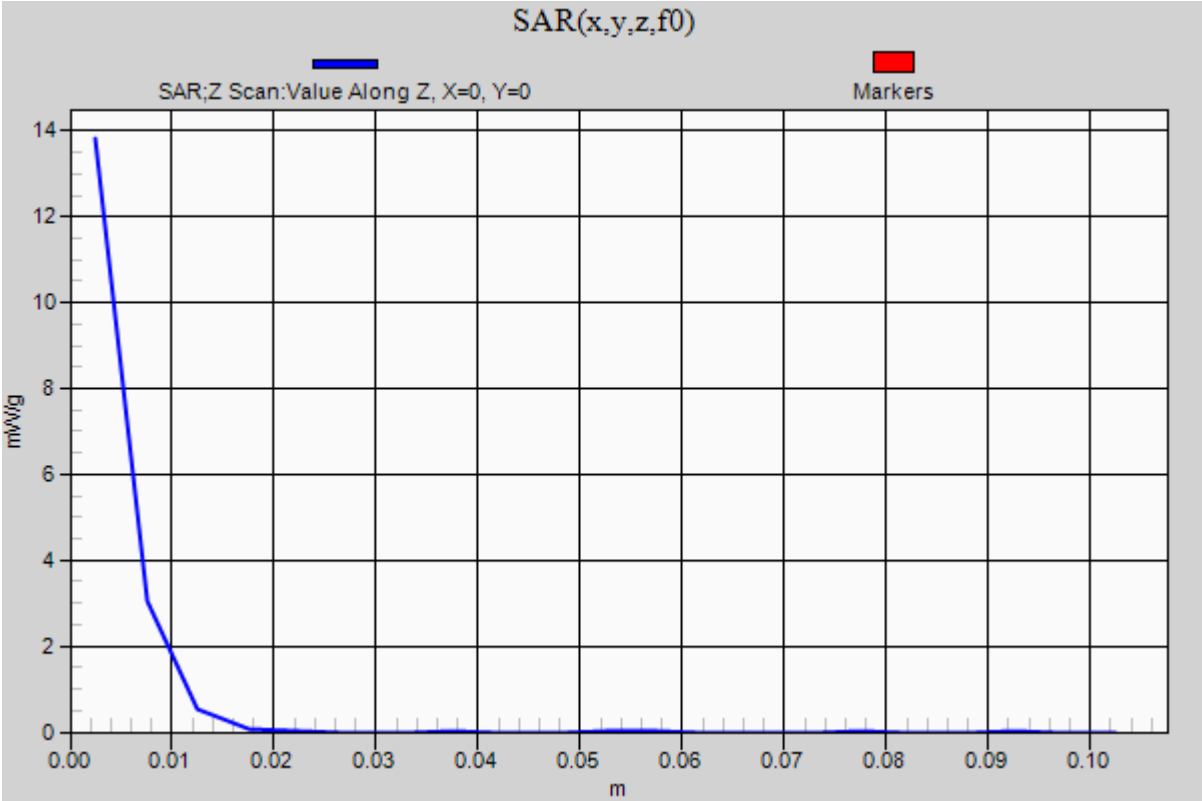

Test Laboratory: UL CCS SAR Lab A Date: 8/19/2012

20120819 SystemPerformanceCheck-D5GHzV2 SN 1075 (5.6GHz)

Frequency: 5600 MHz; Duty Cycle: 1:1; Room Ambient Temperature: 25.0°C; Liquid Temperature: 24.0°C
Medium parameters used: f = 5600 MHz; σ = 5.803 mho/m; ε_r = 47.855; ρ = 1000 kg/m^3
DASY5 Configuration:
- Area Scan setting - Find Secondary Maximum Within: 2.0 dB and with a peak SAR value greater than 0.0012W/kg
- Electronics: DAE4 Sn1258; Calibrated: 3/8/2012
- Probe: EX3DV4 - SN3772; ConvF(3.26, 3.26, 3.26); Calibrated: 2/16/2012
- Sensor-Surface: 2.5mm (Mechanical Surface Detection), Sensor-Surface: 1.4mm (Mechanical Surface Detection)
- Phantom: ELI v5.0 (A); Type: QDOVA001BB; Serial: 1119

Body/5.6 GHz, Pin=100mW/Area Scan (7x7x1): Measurement grid: dx=10mm, dy=10mm
Maximum value of SAR (measured) = 12.346 mW/g

Body/5.6 GHz, Pin=100mW/Zoom Scan (8x8x7)/Cube 0: Measurement grid: dx=4mm, dy=4mm, dz=1.4mm
Reference Value = 49.818 V/m; Power Drift = -0.06 dB
Peak SAR (extrapolated) = 29.2730
SAR(1 g) = 7.45 mW/g; SAR(10 g) = 2.09 mW/g
Maximum value of SAR (measured) = 17.350 mW/g

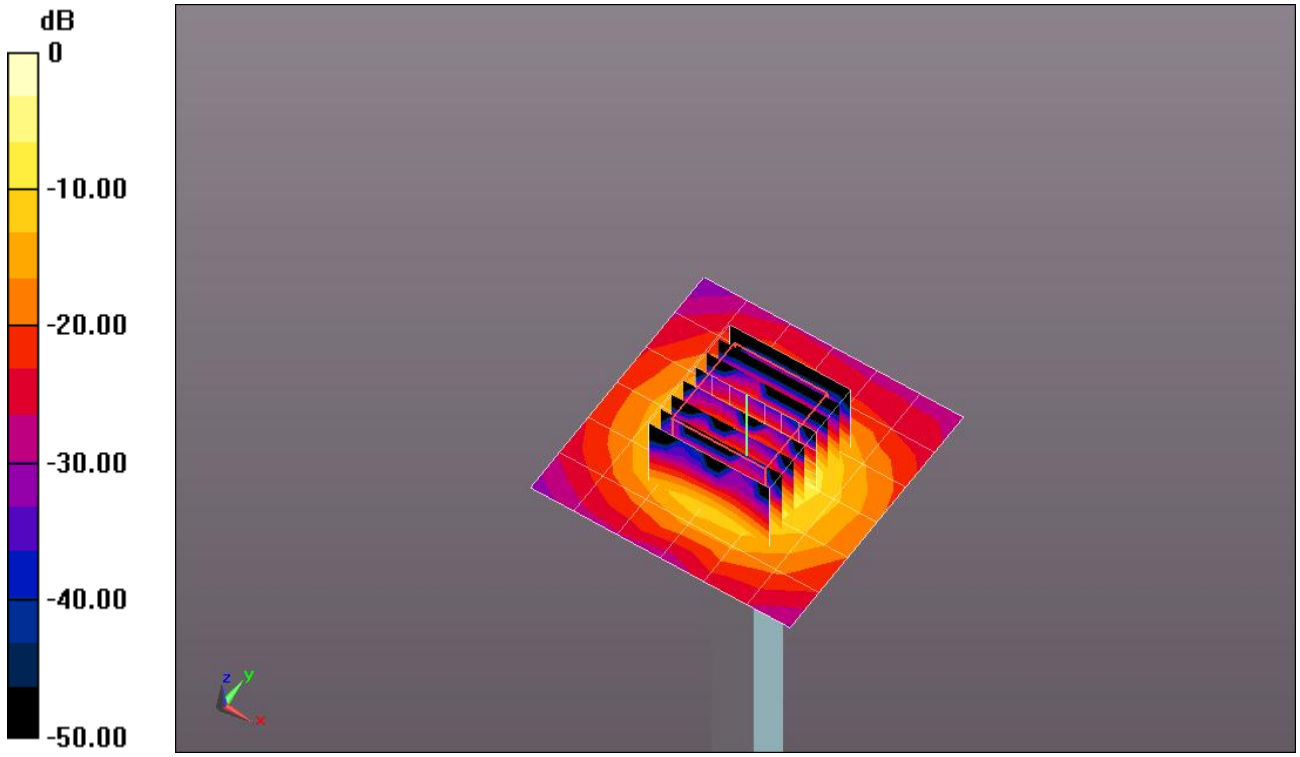

0 dB = 17.350mW/g = 24.79 dB mW/g

Test Laboratory: UL CCS SAR Lab A Date: 8/19/2012

20120819 SystemPerformanceCheck-D5GHzV2 SN 1075 (5.5GHz)

Frequency: 5600 MHz; Duty Cycle: 1:1

Body/5.6 GHz, Pin=100mW/Z Scan (1x1x21): Measurement grid: dx=20mm, dy=20mm, dz=5mm
Maximum value of SAR (measured) = 12.357 mW/g

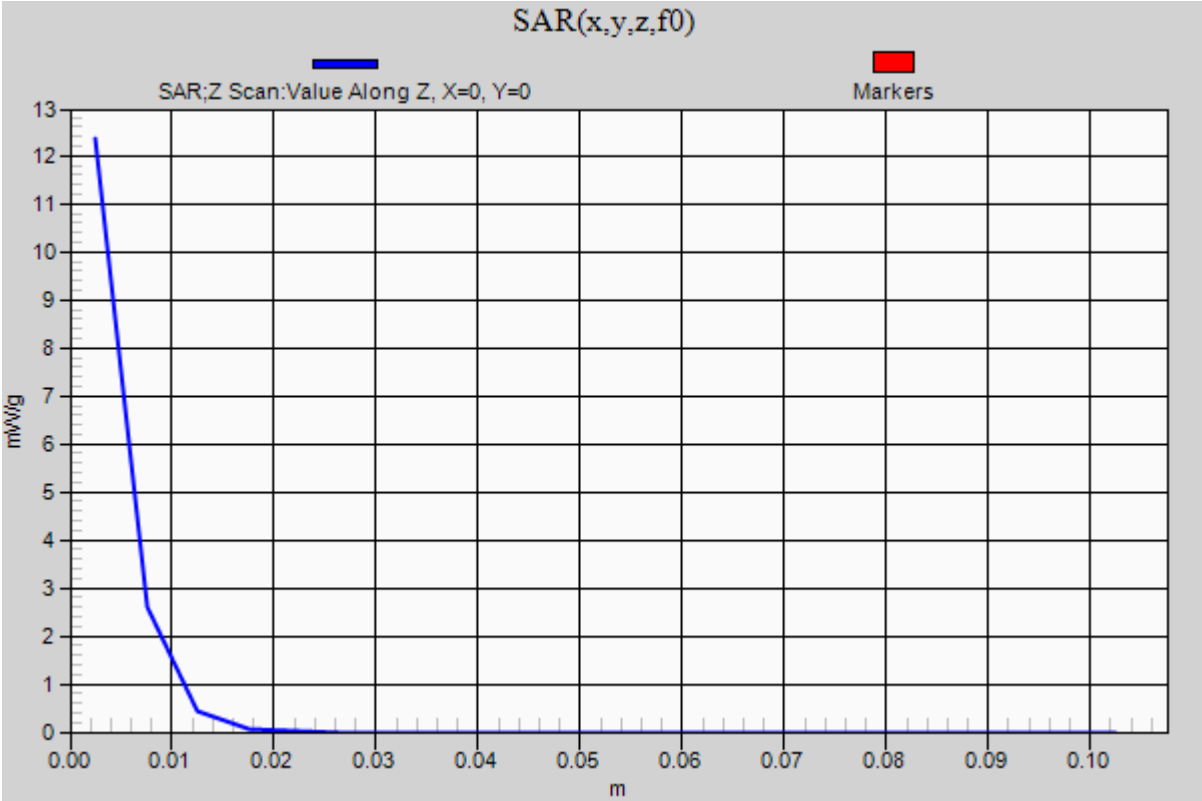

Test Laboratory: UL CCS SAR Lab C Date: 8/20/2012

20120820 SystemPerformanceCheck-D5GHzV2 SN 1075 (5.5GHz)

Frequency: 5500 MHz; Duty Cycle: 1:1; Room Ambient Temperature: 25.0°C; Liquid Temperature: 24.0°C
Medium parameters used: f = 5500 MHz; σ = 5.004 mho/m; ε_r = 35.676; ρ = 1000 kg/m^3
DASY5 Configuration:
- Area Scan setting - Find Secondary Maximum Within: 2.0 dB and with a peak SAR value greater than 0.0012W/kg
- Electronics: DAE4 Sn1239; Calibrated: 6/6/2012
- Probe: EX3DV4 - SN3773; ConvF(4.36, 4.36, 4.36); Calibrated: 3/14/2012
- Sensor-Surface: 2.5mm (Mechanical Surface Detection), Sensor-Surface: 1.4mm (Mechanical Surface Detection)
- Phantom: SAM; Type: QD000P40CD; Serial: 1632

Head/5.5 GHz, Pin=100mW/Area Scan (7x7x1): Measurement grid: dx=10mm, dy=10mm
Maximum value of SAR (measured) = 14.875 mW/g

Head/5.5 GHz, Pin=100mW/Zoom Scan (8x8x7)/Cube 0: Measurement grid: dx=4mm, dy=4mm, dz=1.4mm
Reference Value = 57.747 V/m; Power Drift = -0.04 dB
Peak SAR (extrapolated) = 36.1550
SAR(1 g) = 8.74 mW/g; SAR(10 g) = 2.49 mW/g
Maximum value of SAR (measured) = 20.315 mW/g

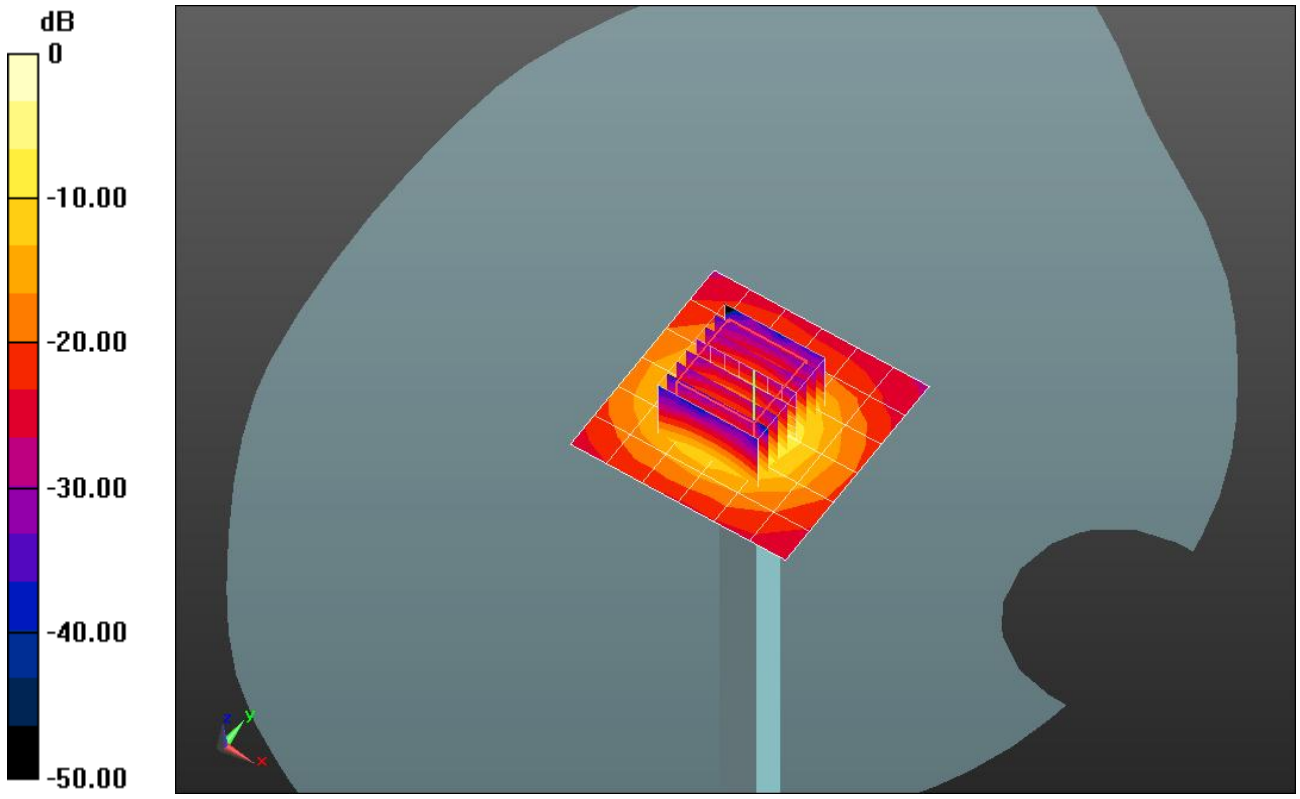

0 dB = 20.310mW/g = 26.15 dB mW/g

Test Laboratory: UL CCS SAR Lab C Date: 8/20/2012

20120820 SystemPerformanceCheck-D5GHzV2 SN 1075 (5.5GHz)

Frequency: 5500 MHz; Duty Cycle: 1:1

Head/5.5 GHz, Pin=100mW/Z Scan (1x1x21): Measurement grid: dx=20mm, dy=20mm, dz=5mm
Maximum value of SAR (measured) = 14.603 mW/g

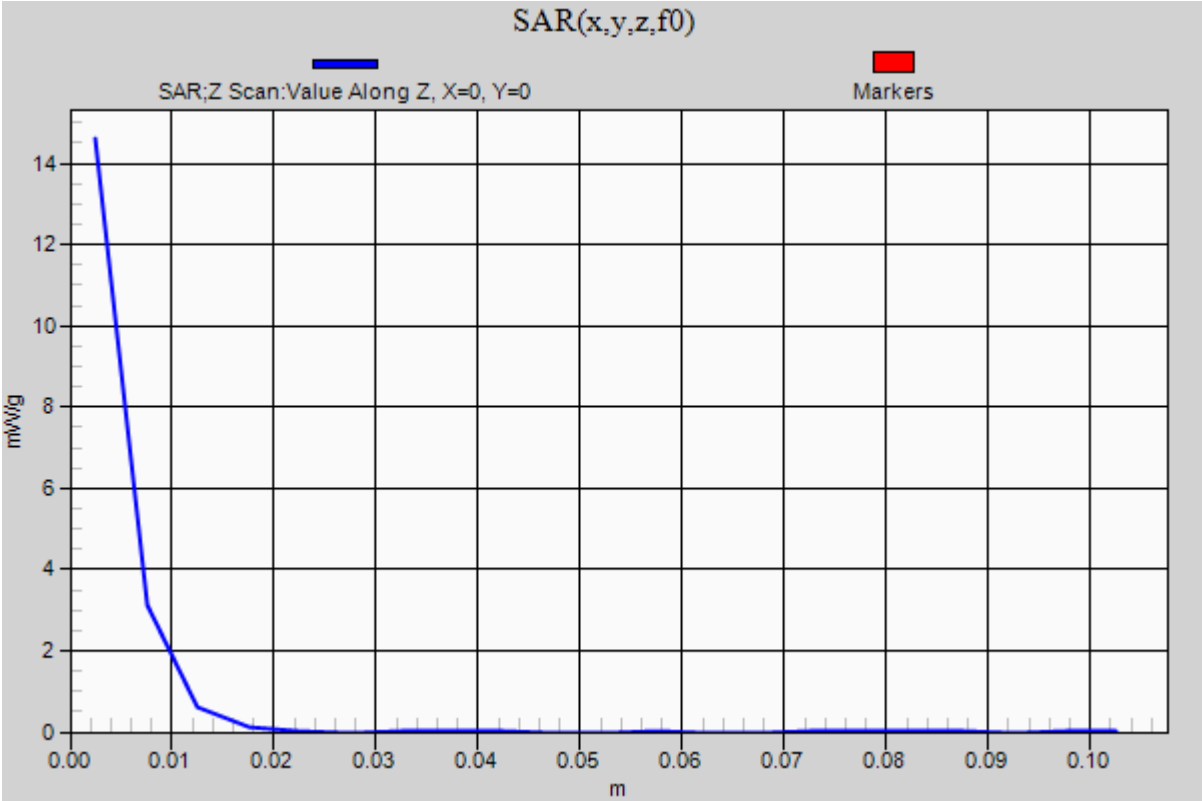

Test Laboratory: UL CCS SAR Lab C Date: 8/20/2012

20120820 SystemPerformanceCheck-D5GHzV2 SN 1075 (5.6GHz)

Frequency: 5600 MHz; Duty Cycle: 1:1; Room Ambient Temperature: 25.0°C; Liquid Temperature: 24.0°C
Medium parameters used: f = 5600 MHz; σ = 5.08 mho/m; ε_r = 35.549; ρ = 1000 kg/m^3
DASY5 Configuration:
- Area Scan setting - Find Secondary Maximum Within: 2.0 dB and with a peak SAR value greater than 0.0012W/kg
- Electronics: DAE4 Sn1239; Calibrated: 6/6/2012
- Probe: EX3DV4 - SN3773; ConvF(4.29, 4.29, 4.29); Calibrated: 3/14/2012
- Sensor-Surface: 2.5mm (Mechanical Surface Detection), Sensor-Surface: 1.4mm (Mechanical Surface Detection)
- Phantom: SAM; Type: QD000P40CD; Serial: 1632

Head/5.6 GHz, Pin=100mW/Area Scan (7x7x1): Measurement grid: dx=10mm, dy=10mm
Maximum value of SAR (measured) = 13.427 mW/g

Head/5.6 GHz, Pin=100mW/Zoom Scan (8x8x7)/Cube 0: Measurement grid: dx=4mm, dy=4mm, dz=1.4mm
Reference Value = 54.363 V/m; Power Drift = -0.0027 dB
Peak SAR (extrapolated) = 34.8290
SAR(1 g) = 8.07 mW/g; SAR(10 g) = 2.31 mW/g
Maximum value of SAR (measured) = 19.050 mW/g

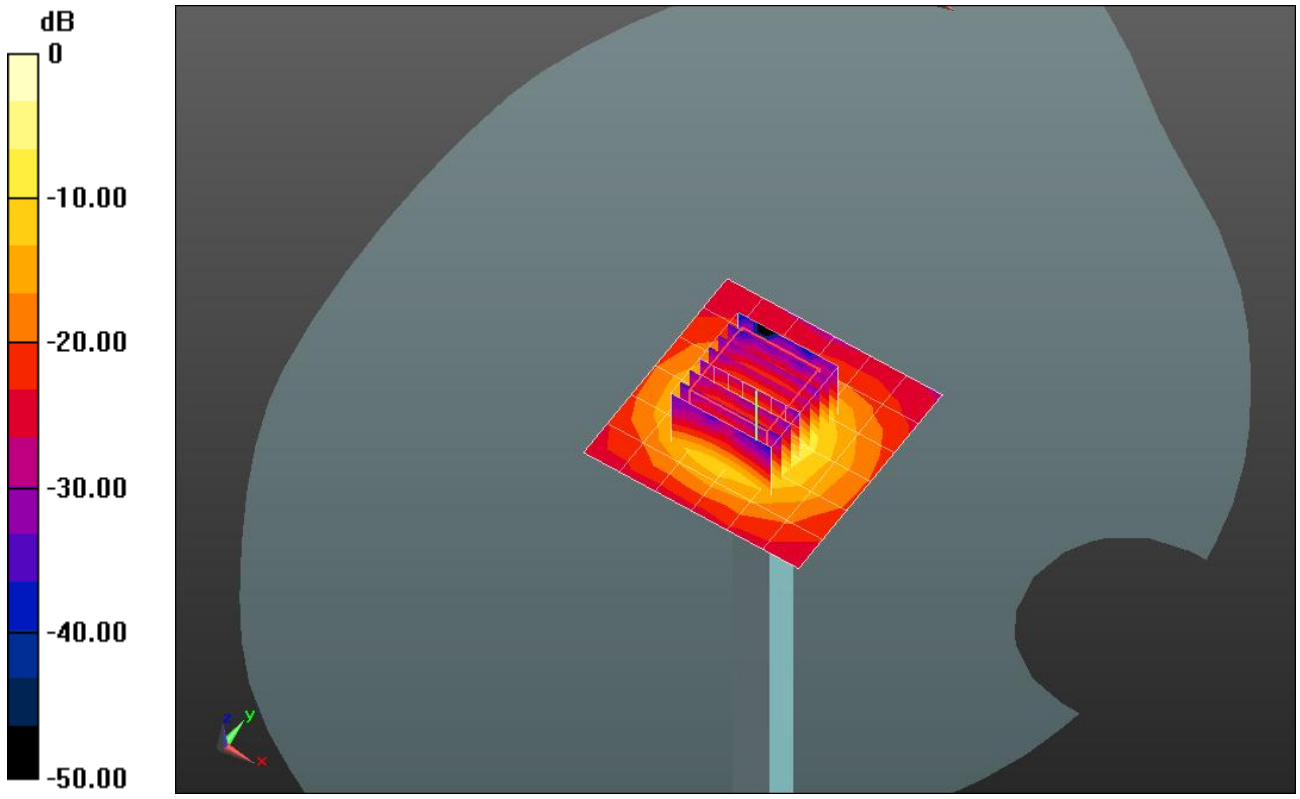

0 dB = 19.050mW/g = 25.60 dB mW/g

Test Laboratory: UL CCS SAR Lab C Date: 8/20/2012

20120820 SystemPerformanceCheck-D5GHzV2 SN 1075 (5.6GHz)

Frequency: 5600 MHz; Duty Cycle: 1:1

Head/5.6 GHz, Pin=100mW/Z Scan (1x1x21): Measurement grid: dx=20mm, dy=20mm, dz=5mm
Maximum value of SAR (measured) = 13.459 mW/g

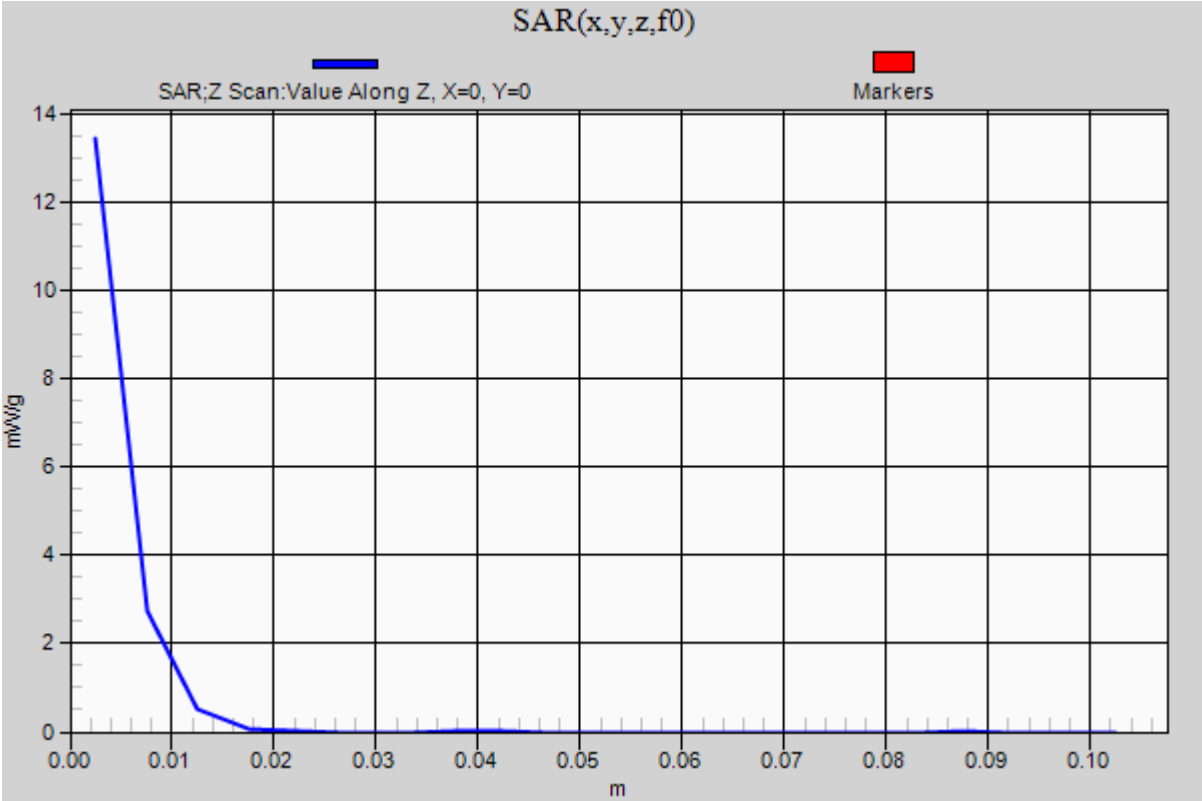

Test Laboratory: UL CCS SAR Lab C Date: 8/21/2012

20120821 SystemPerformanceCheck-D5GHzV2 SN 1075 (5.8GHz)

Frequency: 5800 MHz; Duty Cycle: 1:1; Room Ambient Temperature: 25.0°C; Liquid Temperature: 24.0°C
Medium parameters used: f = 5800 MHz; σ = 5.362 mho/m; ε_r = 35.091; ρ = 1000 kg/m^3
DASY5 Configuration:
- Area Scan setting - Find Secondary Maximum Within: 2.0 dB and with a peak SAR value greater than 0.0012W/kg
- Electronics: DAE4 Sn1239; Calibrated: 6/6/2012
- Probe: EX3DV4 - SN3773; ConvF(4.06, 4.06, 4.06); Calibrated: 3/14/2012
- Sensor-Surface: 2.5mm (Mechanical Surface Detection), Sensor-Surface: 1.4mm (Mechanical Surface Detection)
- Phantom: SAM; Type: QD000P40CD; Serial: 1632

Head/5.8 GHz, Pin=100mW/Area Scan (7x7x1): Measurement grid: dx=10mm, dy=10mm
Maximum value of SAR (measured) = 13.428 mW/g

Head/5.8 GHz, Pin=100mW/Zoom Scan (8x8x7)/Cube 0: Measurement grid: dx=4mm, dy=4mm, dz=1.4mm
Reference Value = 53.233 V/m; Power Drift = 0.07 dB
Peak SAR (extrapolated) = 35.3710
SAR(1 g) = 8.09 mW/g; SAR(10 g) = 2.31 mW/g
Maximum value of SAR (measured) = 19.729 mW/g

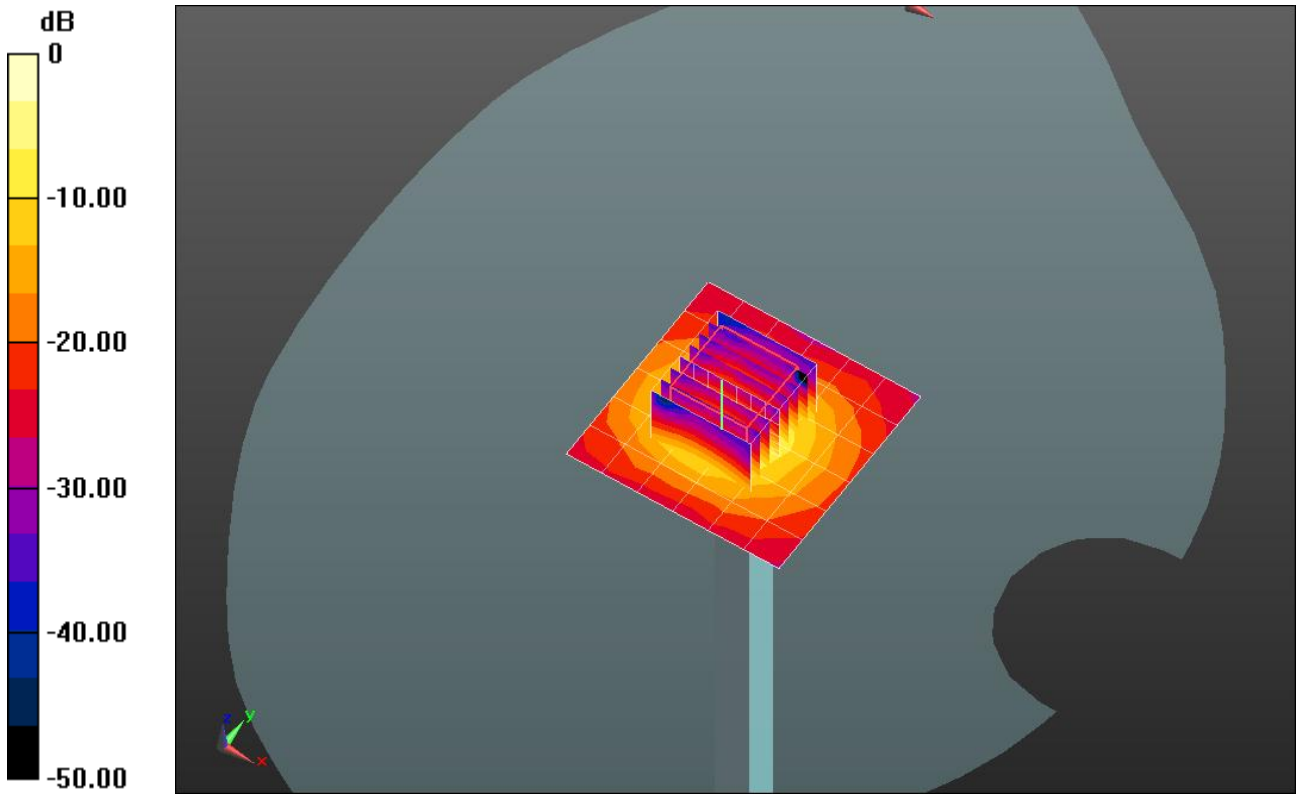

0 dB = 19.730mW/g = 25.90 dB mW/g

Test Laboratory: UL CCS SAR Lab C Date: 8/21/2012

20120821 SystemPerformanceCheck-D5GHzV2 SN 1075 (5.8GHz)

Frequency: 5800 MHz; Duty Cycle: 1:1

Head/5.8 GHz, Pin=100mW/Z Scan (1x1x21): Measurement grid: dx=20mm, dy=20mm, dz=5mm
Maximum value of SAR (measured) = 13.519 mW/g

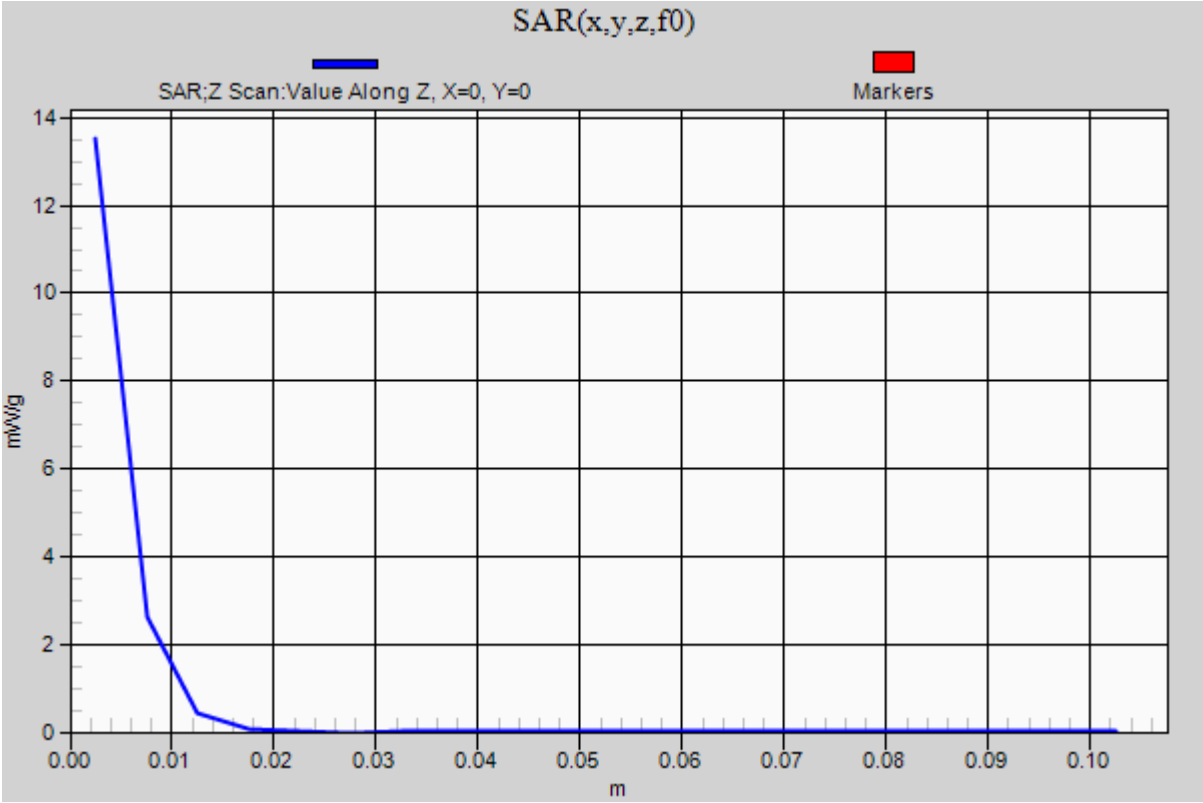

Test Laboratory: UL CCS SAR Lab C Date: 8/21/2012

20120821 SystemPerformanceCheck-D1750V2 SN 1050

Frequency: 1750 MHz; Duty Cycle: 1:1; Room Ambient Temperature: 24.0°C; Liquid Temperature: 23.0°C
Medium parameters used: f = 1750 MHz; σ = 1.454 mho/m; ε_r = 53.511; ρ = 1000 kg/m^3
DASY5 Configuration:
- Area Scan setting - Find Secondary Maximum Within: 2.0 dB and with a peak SAR value greater than 0.0012W/kg
- Electronics: DAE4 Sn1239; Calibrated: 6/6/2012
- Probe: EX3DV4 - SN3773; ConvF(7.37, 7.37, 7.37); Calibrated: 3/14/2012
- Sensor-Surface: 2.5mm (Mechanical Surface Detection)
- Phantom: ELI v5.0 (B); Type: QDOVA001BB; Serial: 1121

Body/Pin=100 mW/Area Scan (7x7x1): Measurement grid: dx=15mm, dy=15mm
Maximum value of SAR (measured) = 4.690 mW/g

Body/Pin=100 mW/Zoom Scan (7x7x7)/Cube 0: Measurement grid: dx=5mm, dy=5mm, dz=5mm
Reference Value = 57.592 V/m; Power Drift = -0.02 dB
Peak SAR (extrapolated) = 6.5170
SAR(1 g) = 3.67 mW/g; SAR(10 g) = 1.96 mW/g
Maximum value of SAR (measured) = 4.900 mW/g

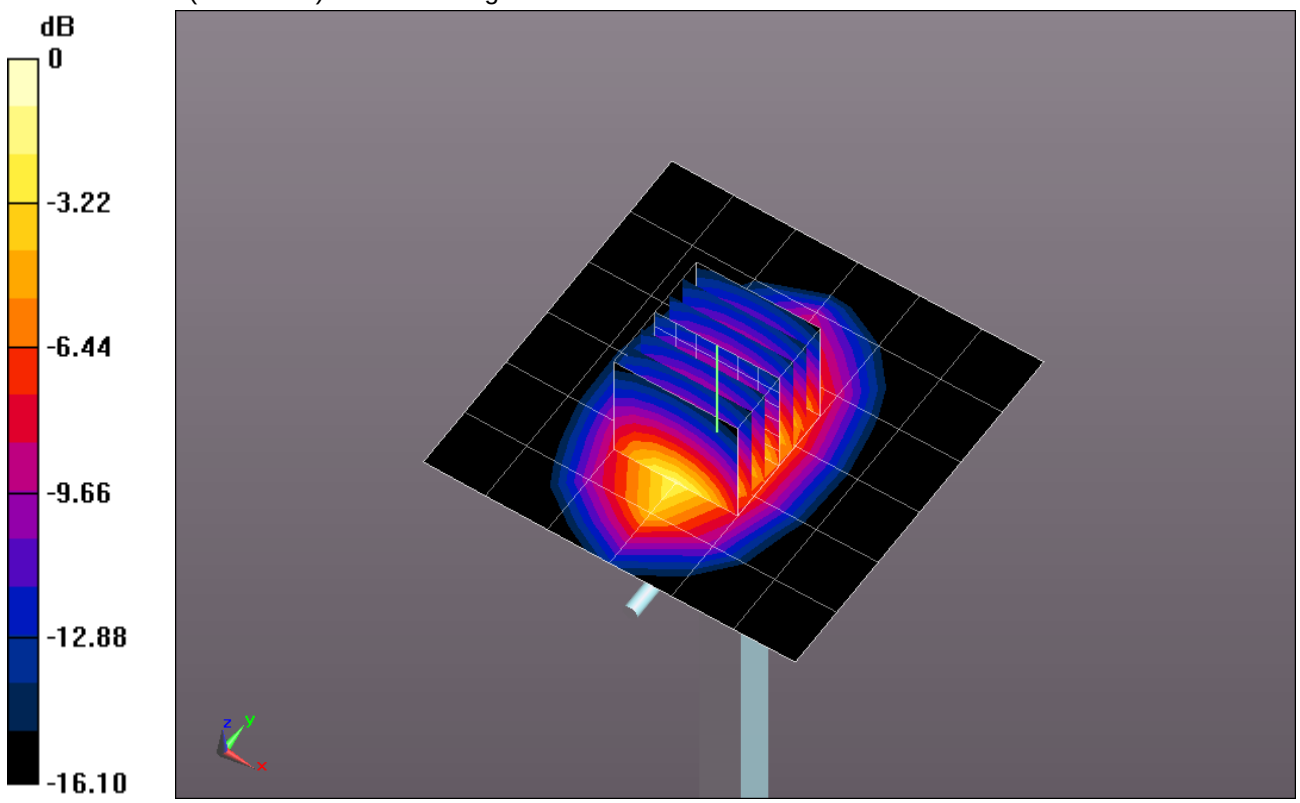

0 dB = 4.900mW/g = 13.80 dB mW/g

Test Laboratory: UL CCS SAR Lab C Date: 8/21/2012

20120821 SystemPerformanceCheck-D1750V2 SN 1050

Frequency: 1750 MHz; Duty Cycle: 1:1

Body/Pin=100 mW/Z Scan (1x1x21): Measurement grid: dx=20mm, dy=20mm, dz=5mm
Maximum value of SAR (measured) = 4.688 mW/g

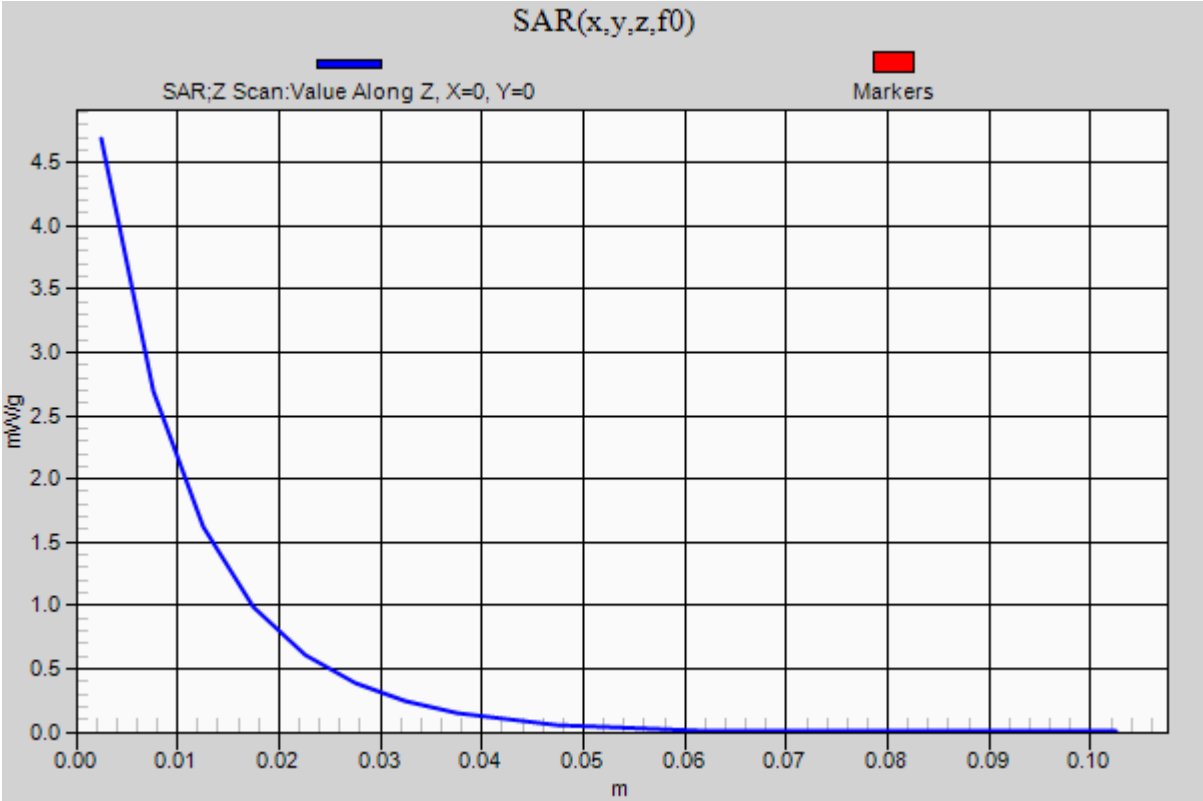

Test Laboratory: UL CCS SAR Lab C Date: 8/22/2012

20120822 SystemPerformanceCheck-D1900V2 SN 5d140

Frequency: 1900 MHz; Duty Cycle: 1:1; Room Ambient Temperature: 24.0°C; Liquid Temperature: 23.0°C
Medium parameters used: f = 1900 MHz; σ = 1.526 mho/m; ε_r = 52.946; ρ = 1000 kg/m^3
DASY5 Configuration:
- Area Scan setting - Find Secondary Maximum Within: 2.0 dB and with a peak SAR value greater than 0.0012W/kg
- Electronics: DAE4 Sn1239; Calibrated: 6/6/2012
- Probe: EX3DV4 - SN3773; ConvF(7.11, 7.11, 7.11); Calibrated: 3/14/2012
- Sensor-Surface: 2.5mm (Mechanical Surface Detection)
- Phantom: ELI v5.0 (B); Type: QDOVA001BB; Serial: 1099

Body/Pin=100 mW/Area Scan (7x7x1): Measurement grid: dx=15mm, dy=15mm
Maximum value of SAR (measured) = 5.394 mW/g

Body/Pin=100 mW/Zoom Scan (7x7x7)/Cube 0: Measurement grid: dx=5mm, dy=5mm, dz=5mm
Reference Value = 59.871 V/m; Power Drift = -0.11 dB
Peak SAR (extrapolated) = 7.7130
SAR(1 g) = 4.25 mW/g; SAR(10 g) = 2.24 mW/g
Maximum value of SAR (measured) = 5.669 mW/g

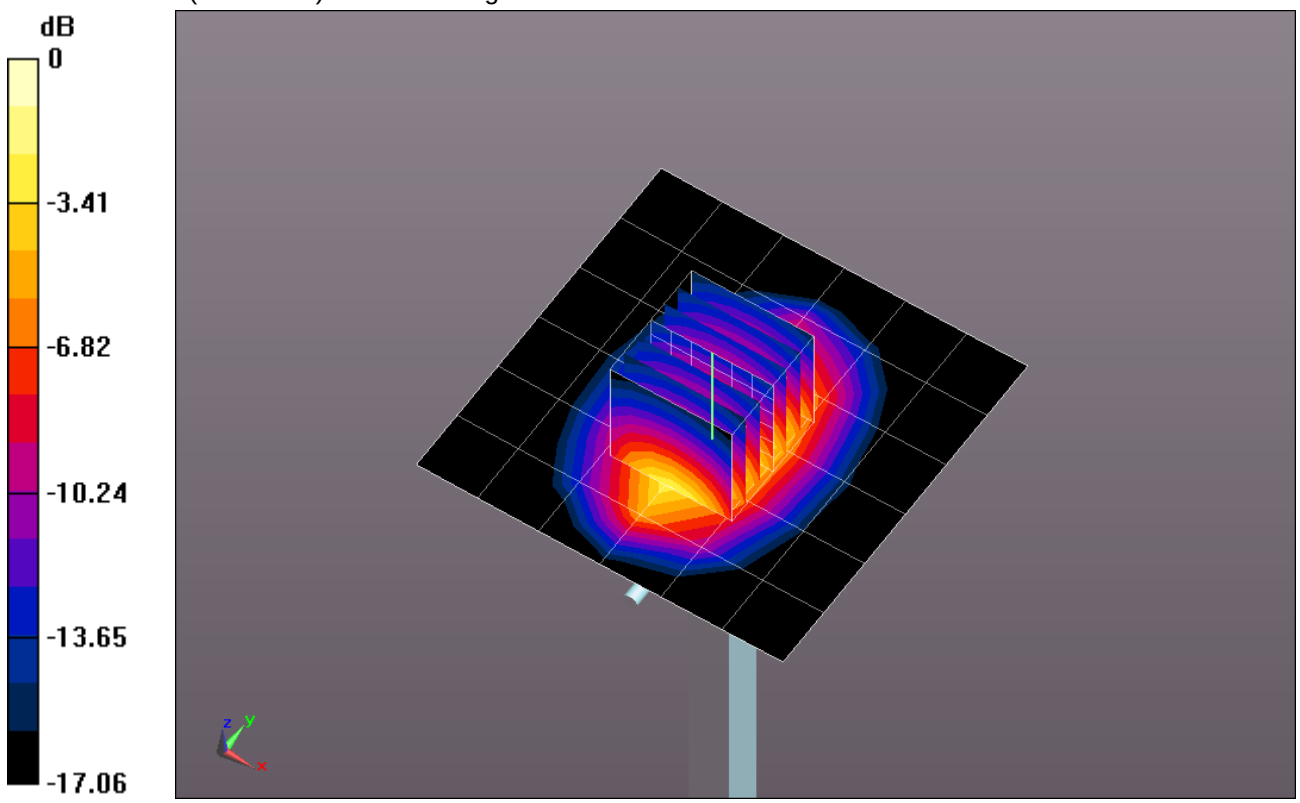

0 dB = 5.670mW/g = 15.07 dB mW/g

Test Laboratory: UL CCS SAR Lab C Date: 8/22/2012

20120822 SystemPerformanceCheck-D1900V2 SN 5d140

Frequency: 1900 MHz; Duty Cycle: 1:1

Body/Pin=100 mW/Z Scan (1x1x21): Measurement grid: dx=20mm, dy=20mm, dz=5mm
Maximum value of SAR (measured) = 5.392 mW/g

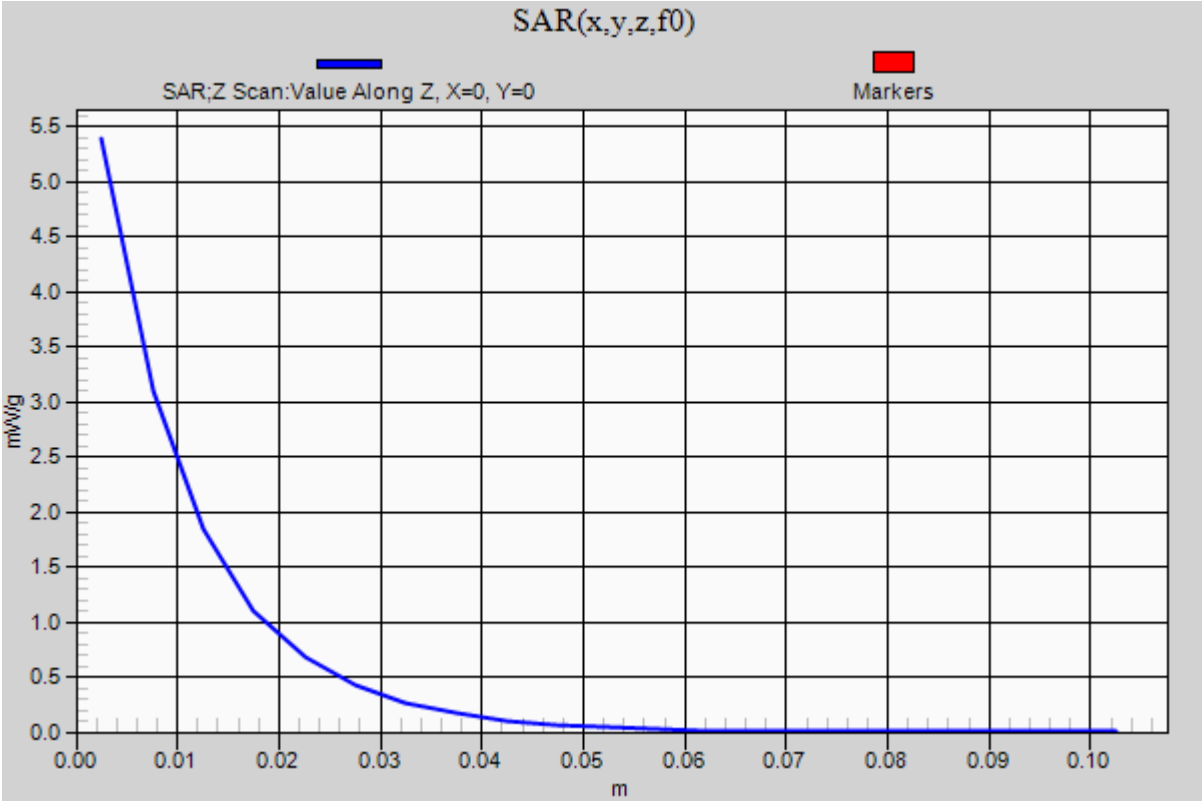

Test Laboratory: UL CCS SAR Lab C Date: 8/23/2012

20120823 SystemPerformanceCheck-D835V2 SN 4d002

Frequency: 835 MHz; Duty Cycle: 1:1; Room Ambient Temperature: 24.0°C; Liquid Temperature: 23.0°C
Medium parameters used: f = 835 MHz; σ = 0.891 mho/m; ε_r = 42.208; ρ = 1000 kg/m^3
DASY5 Configuration:
- Area Scan setting - Find Secondary Maximum Within: 2.0 dB and with a peak SAR value greater than 0.0012W/kg
- Electronics: DAE4 Sn1239; Calibrated: 6/6/2012
- Probe: EX3DV4 - SN3773; ConvF(8.79, 8.79, 8.79); Calibrated: 3/14/2012
- Sensor-Surface: 2.5mm (Mechanical Surface Detection)
- Phantom: SAM; Type: QD000P40CD; Serial: 1632

Head/Pin=100 mW/Area Scan (7x7x1): Measurement grid: dx=15mm, dy=15mm
Maximum value of SAR (measured) = 1.112 mW/g

Head/Pin=100 mW/Zoom Scan (7x7x7)/Cube 0: Measurement grid: dx=5mm, dy=5mm, dz=5mm
Reference Value = 35.698 V/m; Power Drift = -0.0032 dB
Peak SAR (extrapolated) = 1.4000
SAR(1 g) = 0.926 mW/g; SAR(10 g) = 0.605 mW/g
Maximum value of SAR (measured) = 1.131 mW/g

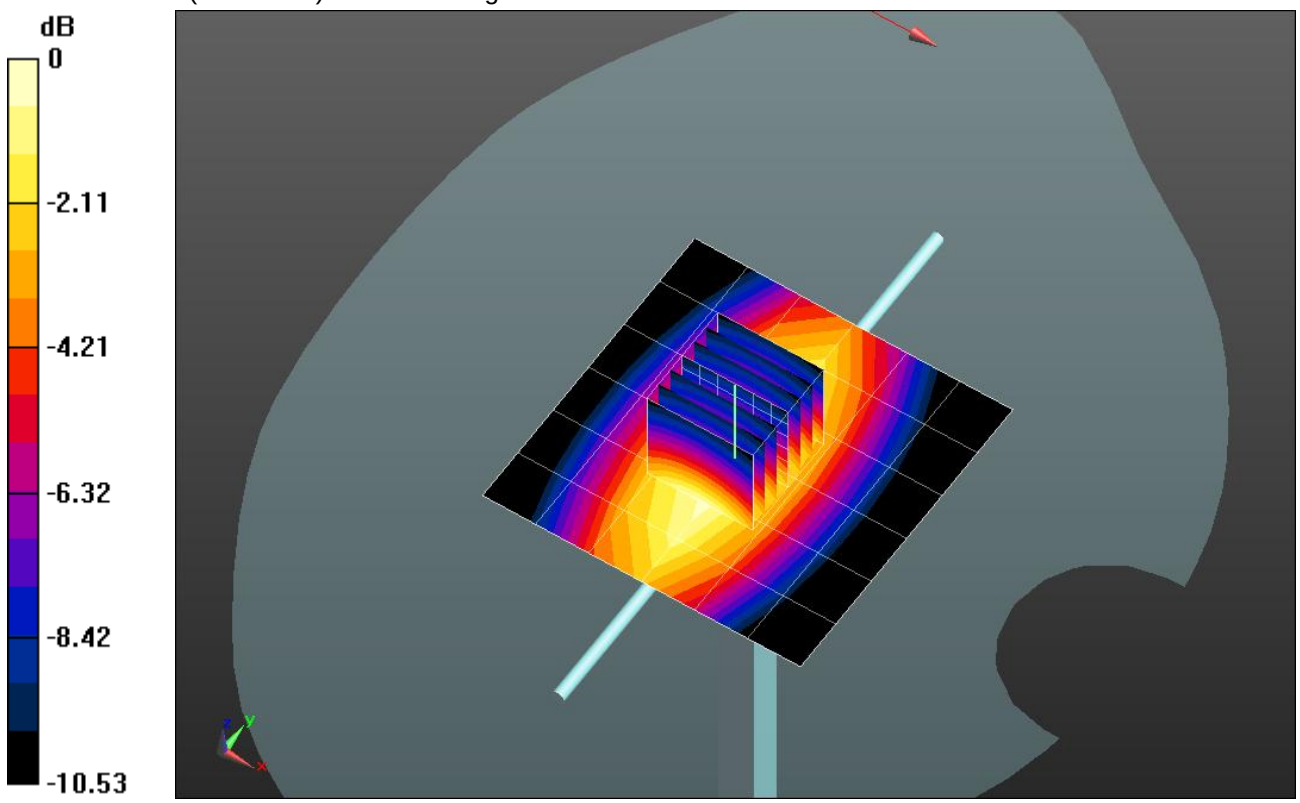

0 dB = 1.130mW/g = 1.06 dB mW/g

Test Laboratory: UL CCS SAR Lab C Date: 8/23/2012

20120823 SystemPerformanceCheck-D835V2 SN 4d002

Frequency: 835 MHz; Duty Cycle: 1:1

Head/Pin=100 mW/Z Scan (1x1x21): Measurement grid: dx=20mm, dy=20mm, dz=5mm
Maximum value of SAR (measured) = 1.109 mW/g

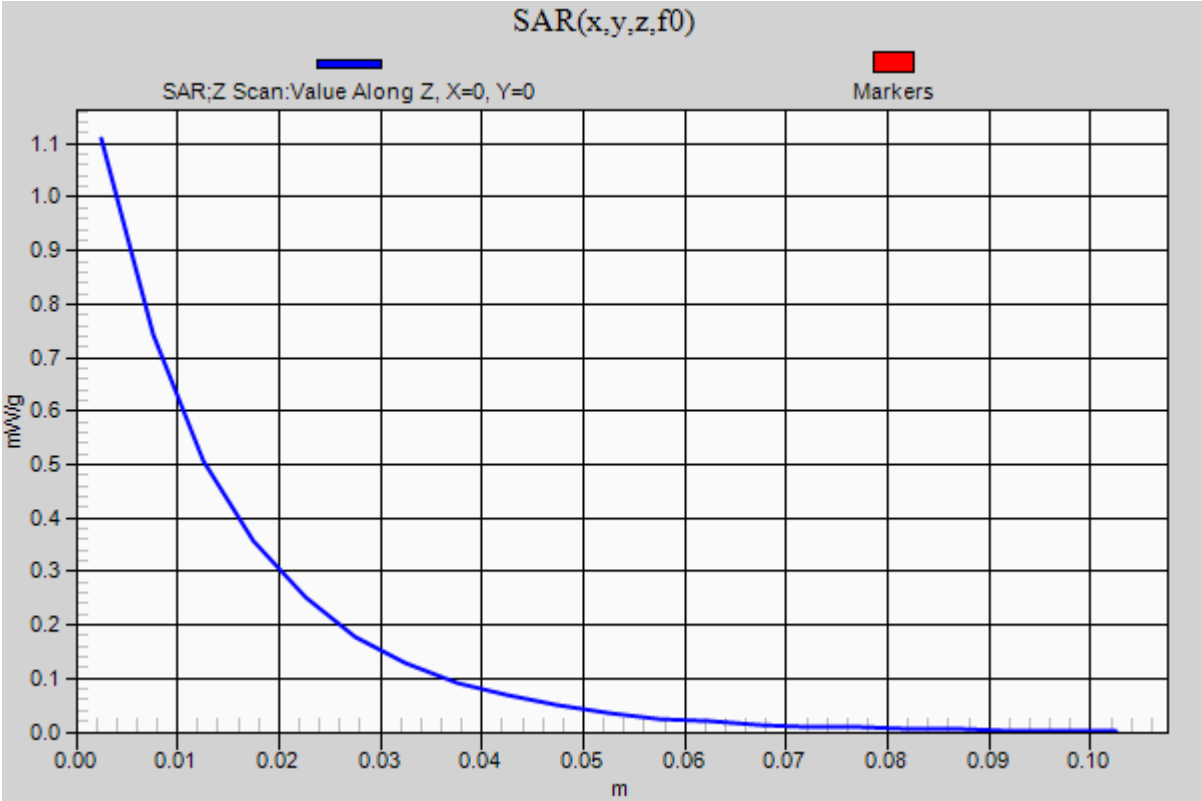

Test Laboratory: UL CCS SAR Lab C Date: 8/23/2012

20120823 SystemPerformanceCheck-D1900V2 SN 5d140

Frequency: 1900 MHz; Duty Cycle: 1:1; Room Ambient Temperature: 24.0°C; Liquid Temperature: 23.0°C
Medium parameters used: f = 1900 MHz; σ = 1.39 mho/m; ε_r = 41.057; ρ = 1000 kg/m^3
DASY5 Configuration:
- Area Scan setting - Find Secondary Maximum Within: 2.0 dB and with a peak SAR value greater than 0.0012W/kg
- Electronics: DAE4 Sn1239; Calibrated: 6/6/2012
- Probe: EX3DV4 - SN3773; ConvF(7.51, 7.51, 7.51); Calibrated: 3/14/2012
- Sensor-Surface: 2.5mm (Mechanical Surface Detection)
- Phantom: SAM; Type: QD000P40CD; Serial: 1632

Head/Pin=100 mW/Area Scan (7x7x1): Measurement grid: dx=15mm, dy=15mm
Maximum value of SAR (measured) = 4.919 mW/g

Head/Pin=100 mW/Zoom Scan (7x7x7)/Cube 0: Measurement grid: dx=5mm, dy=5mm, dz=5mm
Reference Value = 60.601 V/m; Power Drift = 0.0049 dB
Peak SAR (extrapolated) = 7.0160
SAR(1 g) = 3.88 mW/g; SAR(10 g) = 2.04 mW/g
Maximum value of SAR (measured) = 5.190 mW/g

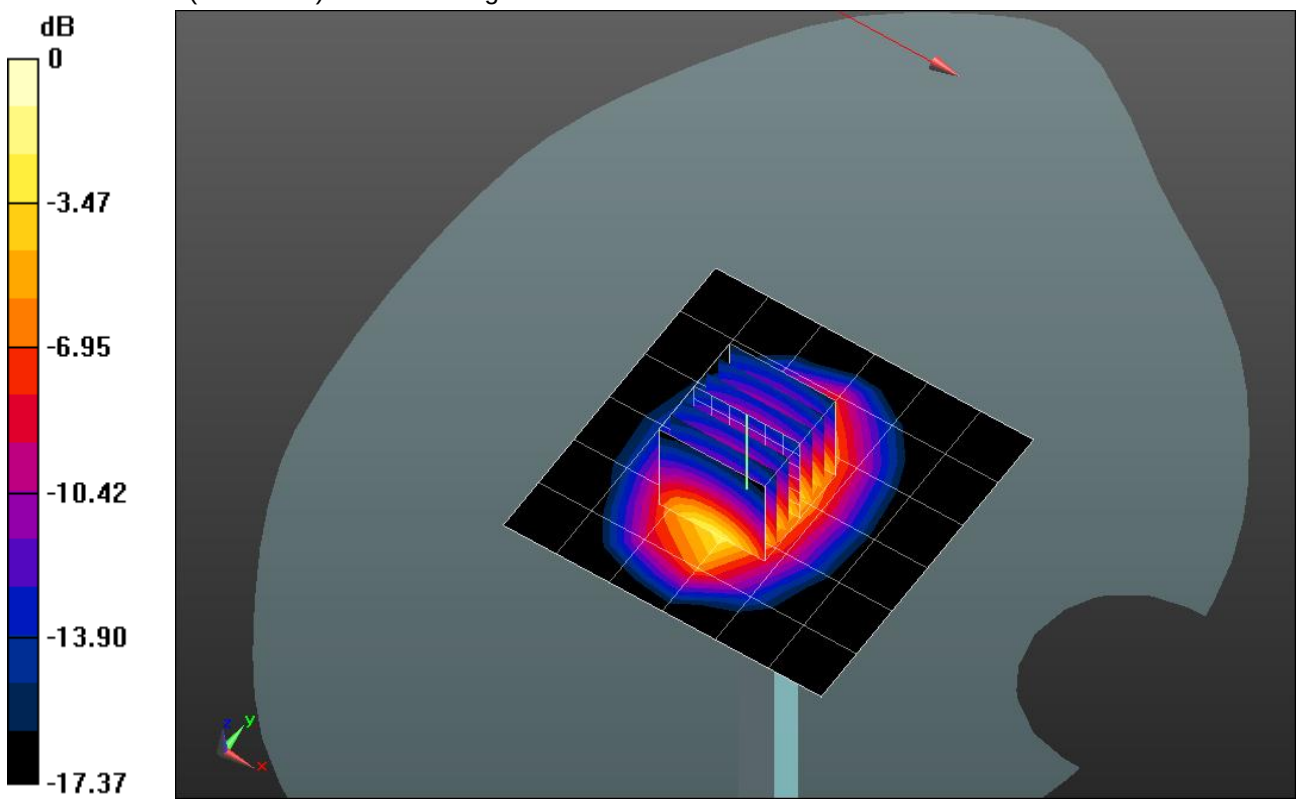

0 dB = 5.190mW/g = 14.30 dB mW/g

Test Laboratory: UL CCS SAR Lab C Date: 8/23/2012

20120823 SystemPerformanceCheck-D1900V2 SN 5d140

Frequency: 1900 MHz; Duty Cycle: 1:1
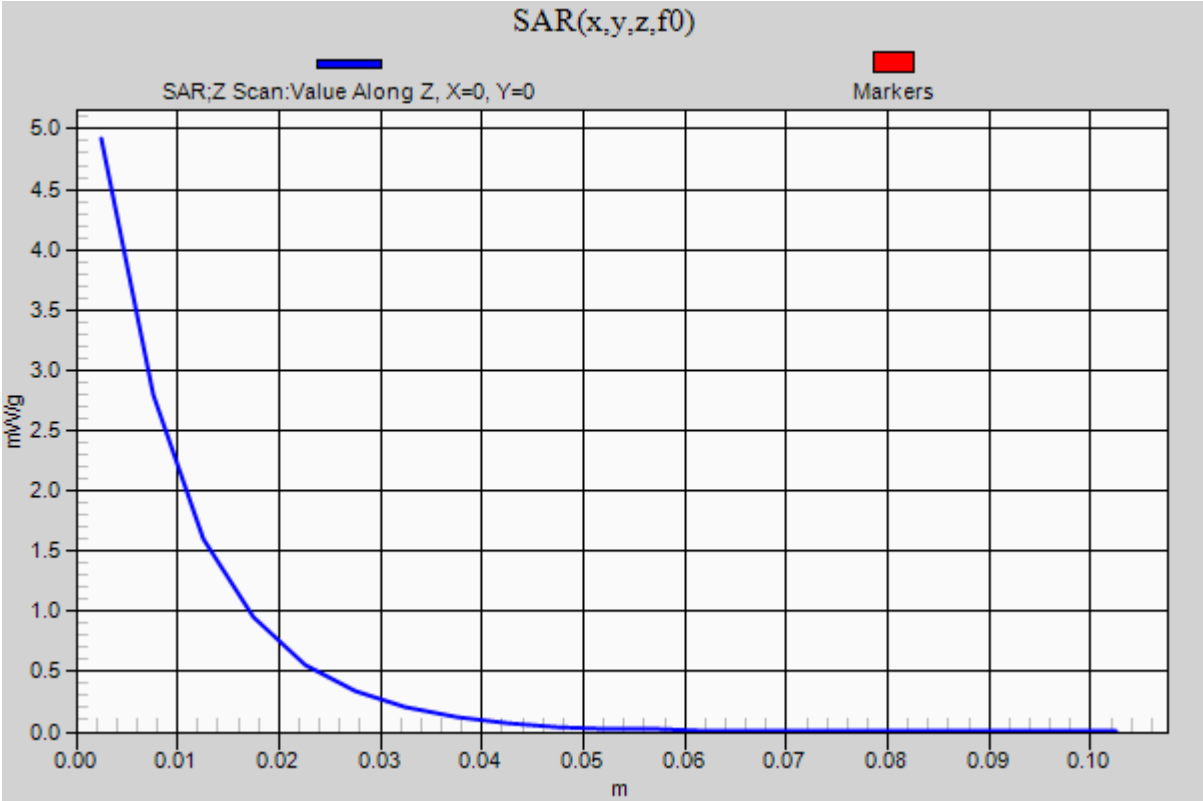
Head/Pin=100 mW/Z Scan (1x1x21): Measurement grid: dx=20mm, dy=20mm, dz=5mm
Maximum value of SAR (measured) = 4.919 mW/g