Wiley Rein LLP

1776 K STREET NW
WASHINGTON, DC 20006
PHONE 202.719.7000
FAX 202.719.7049

7925 JONES BRANCH DRIVE
McLEAN, VA 22102
PHONE 703.905.2800
FAX 703.905.2820

www.wileyrein.com

January 18, 2013

**BY ELECTRONIC FILING**

Marlene H. Dortch, Secretary
Federal Communications Commission
445 12th Street, SW
Washington, DC 20554

Re: *Request for Connect America Fund Cost Models*, FCC Public Notice in WC Dockets 10-90 and 05-337, DA 11-2026 (Wireline Competition Bur., rel. Dec. 15, 2011)

Dear Ms. Dortch:

Today, Puerto Rico Telephone Company, Inc. ("PRT") is making two separate filings in the Connect America Fund Phase II ("CAF II") proceeding.

First, PRT is hand-delivering under separate cover a highly confidential Puerto Rico-specific cost model, which PRT refers to as the "Broadband Cost Model: Puerto Rico" or "BCMPR."[1] Unlike the Connect America Cost Model (which is based on the ABC Coalition's CQBAT Model), the BCMPR accounts for the unique challenges of deploying and offering broadband services in Puerto Rico. Accordingly, PRT urges the Commission to employ the BCMPR when determining how to allocate CAF II support for Puerto Rico. If the Bureau opts not to use BCMPR, it should, at a minimum, maintain legacy high cost universal service support for Puerto Rico.

Second, in attachments to the instant letter, PRT is submitting two non-confidential documents prepared by PRT's outside consultant, Parris, Blessing & Associates, Inc. Attachment A contains documentation on the mechanics of the BCMPR. Attachment B contains an analysis of the CQBAT model results for insular and non-insular price cap carriers.

---

[1] PRT alerted the Commission that it would file this cost model on November 19, 2012. *See* Letter from Thomas J. Navin to Marlene H. Dortch, WC Docket No. 10-90 (filed Nov. 19, 2012).

Please let me know if you have any questions.

Respectfully submitted,

Thomas J. Navin
*Counsel for Puerto Rico Telephone Company, Inc.*

# Attachment A

# Broadband Cost Model

Insular Area Broadband Network Economic Cost Simulation
for Puerto Rico

Parrish, Blessing and Associates, Inc.
3975 University Drive, Suite 215
Fairfax, VA 22030

**Table of Contents**

## Executive Summary of Broadband Cost Model: Puerto Rico

In its Connect America Fund Report and Order and Further Notice of Proposed Rulemaking, the Federal Communications Commission (FCC) specifically addressed the issue of support for insular areas. The FCC directed the Wireline Competition Bureau (WCB), "to consider the unique circumstances," of Alaska, Hawaii, Puerto Rico, the U.S. Virgin Islands and Northern Marianas Islands, "when adopting a cost model." The FCC further directed the WCB, "to consider whether the model ultimately adopted adequately accounts for the costs faced by carriers serving these areas." If the model adopted by the WCB does not meet this insular test ordered by the FCC, then, "the Bureau may maintain existing support levels, as modified in this Order, to any affected price cap carrier, without exceeding the overall budget of $1.8 billion per year for price cap areas."[1]

To-date, only two models have been put forth to set funding under the second phase of the Connect America Fund (CAF II). A coalition comprised of most of the price cap carriers serving the mainland U.S. sponsored the CQBAT model while ACS submitted a model that estimates the cost of microwave, satellite and undersea cable transport facilities required in Alaska that were not included in the CQBAT model. The CQBAT model is capable of producing estimates of the cost of provisioning and operating broadband networks, as well as, broadband support levels for all 48 contiguous states and the insular localities.[2] While reported to be capable of "brownfield" estimation the default runs of the model assume a "greenfield" approach with a maximum copper loop length of 12,000 feet. The model estimates build-out investment and operating expenses at the census block level to determine support, based on a number of user defined inputs. In its review of the model, the FCC objected to the CQBAT's lack of transparency, with its limited opportunity for review of inputs or calculations.[3]

While the CQBAT model may provide acceptable results for the contiguous 48 states, the CQBAT model results clearly indicate that it fails to account for the unique circumstances faced by carriers in insular

[1] *See ¶193 of In the Matter of Connect America Fund A National Broadband Plan for Our Future Establishing Just and Reasonable Rates for Local Exchange Carriers High-Cost Universal Service Support Developing an Unified Intercarrier Compensation Regime Federal-State Joint Board on Universal Service Lifeline and Link-Up Universal Service Reform – Mobility Fun,* WC Docket No. 10-90, GN Docket No. 09-51, WC Docket No. 07-135, WC Docket No. 05-337, CC Docket No. 01-92, CC Docket No. 96-45, WC Docket No. 03-109, WT Docket No. 10-208, Report And Order And Further Notice Of Proposed Rulemaking, FCC-161 (2011).

[2] On December 11th, 2012 the WCB announced that the Connect America Cost Model (CACM) was available subject to execution of protective orders. As described by the WCB and in the CACM's documentation, this new model is an updated version of the CQBAT albeit it with certain enhancements, including the inclusion of costs associated with voice service. Based on a review of the available documentation, the CACM does not include any additional measures or data related to insular areas. In fact, the support results for Puerto Rico, Alaska and the Virgin Islands derived from the available CACM solution sets are slightly lower than what was predicted by the CQBAT.

[3] *Ibid* at *¶185*.

areas. This is not surprising given that the model was not originally designed to handle insular areas such as Alaska, Puerto Rico and the Virgin Islands.[4] The model platform was originally designed and built to model broadband for the lower 48 states. Only as an afterthought were the insular areas added. Moreover, none of the members of the ABC coalition are insular carriers.[5] This is important since the inputs into the CQBAT model were determined based on average data supplied by the coalition members. Given that no insular carriers are members of the coalition, no insular data was incorporated into the inputs. Without input from insular areas, the CQBAT model cannot be expected to adequately capture the costs specific to places like Puerto Rico, the Virgin Islands and Alaska. The model's results to date illustrate its inability to accurately estimate broadband costs in insular areas.

The CQBAT model's lack of consideration of the circumstances unique to an insular area is exemplified by its assumptions regarding the location of internet peering points. The CQBAT model assumes that the nearest internet peering location is on a regional tandem located in the same LATA and connected by fiber. While this may be the case for price cap carriers in the contiguous 48 states, the assumption does not hold for insular areas like Puerto Rico. Instead, Puerto Rico, like Alaska and the Virgin Islands, must connect to the internet via thousands of miles of undersea cable. The costs for such a connection are not accounted for at all in the CQBAT model. This is simply one example of the specific costs that a model must take into consideration if it is to accurately determine the broadband funding for insular locales like Puerto Rico.

The results of the model also demonstrate that the CQBAT model fails the FCC's insular test. Under the CAF II program adopted by the Commission, the broadband funding for price cap carriers will increase from the current amount of $1.076B to $1.8B. This represents a potential across the board increase in support to price cap carriers of 67.2%. The increased support is necessary because of the expanded requirements that carriers must meet under CAF II. But, based on the analysis of the model's results, the CQBAT would result in a reduction of support for PRTC of 95.4%, from $36.8M to $1.7M annually. And the results for other insular areas are similar to those for Puerto Rico. The CQBAT model would result in a 67% decrease in annual support for Alaska's ACS, from $19.6M to 6.5M. Likewise, the Virgin Island's VITELCO would see a 97.6% reduction in support, from $16.5M to $0.4M. This reduction in support is counterintuitive given both the increase in support available to price cap carriers and the increased obligations under CAF II. The reality is that support for areas like Puerto Rico should increase under the CAF II as carriers work to meet the increased obligations of the specific broadband requirements – as the CQBAT model predicts in mainland price cap areas. The CQBAT, while possibly

[4] FCC Workshop CAF Modeling, September 14-15 2012.
[5] CQBAT support files.

acceptable for the continental US, does not adequately account for the unique circumstances faced by carriers serving insular areas as its results so clearly demonstrate.

Because the CQBAT model fails the FCC's insular test, PRTC is putting forth its own broadband cost model for the island of Puerto Rico. Parrish, Blessing and Associates (PBA), an economic consulting firm with significant experience in insular costing, including the previously filed ACS Model, has developed a forward-looking broadband cost model developed specifically for insular areas. The model's structure is flexible in order to utilize the unique customer location and input data available for a specific insular area. As such, the framework is designed to be applied to any insular carrier. In order to address concerns about transparency, the Broadband Cost Model (BCM) is EXCEL-based and allows interested parties to review, analyze and/or change the assumptions, algorithms and formulas contained in the model. This feature will allow reviewers to evaluate in real time the impact of any changes made.

The version of the Broadband Cost Model filed herein for PRTC uses a Puerto Rico-specific set of inputs to determine the cost of providing broadband in Puerto Rico. The model includes the last and middle mile segments and access to the nearest Internet peering point in the continental United States. The Broadband Cost Model: Puerto Rico (BCMPR) was built off of PBA's Forward-Looking Model (FLM), versions of which have been used to determine UNE rates by Puerto Rico's Telecommunications Regulatory Board (TRB) for the past sixteen years. The BCMPR uses a modified "greenfield" approach based on a 2009 Right-Of-Way (ROW) study commissioned by PRTC in response to new ROW tax legislation. The model develops the cost for provisioning and operating a broadband network capable of meeting the CAF Order's requirements in Puerto Rico. The model follows the network topology described in the CAF Order[6], that is, models a Fiber-To-The-DSLAM (FTTd) configuration. Customers would be served by a modem at the customer premise, a customer connection provided by copper or copper/fiber, a DSLAM and IP-capable routers. Two significant differences between the CQBAT and the BCMPR include the inclusion of the cost of the undersea cable from Puerto Rico to the nearest internet peering location in Florida and the use of Puerto Rico specific inputs. Unlike the CQBAT model, the BCMPR allows users to see inputs and review calculations in Excel with complete transparency. The BCMPR also uses Puerto Rico-specific costs for the acquisition, engineering and installation prices for broadband transmission equipment (routers, DSLAMS, etc.), for material, engineering and installation costs of fiber and copper outside plant including any required miscellaneous materials and for equipment to develop last and middle mile Puerto Rico-specific costs.

[6] CAF Order at 111.

As noted above, the BCMPR develops the investment for the broadband network at the Census Block Group level, as opposed to the Census Block level. In this version of the BCMPR, PBA used the CBG level data to model the broadband network to allow the analysis to be performed in Excel. Building the BCMPR in Excel allows users to be able to easily follow and trace calculations. It also allows users to adjust inputs and see nearly instantaneous results. This was possible because, in Puerto Rico, there are only approximately 2,600 Census Block Groups. Excel is able to handle the development of broadband investment for this number of CBGs. In contrast, there are over 77,000 Census Blocks in Puerto Rico. The calculation of broadband investment for these 77,000 census blocks would have severely taxed the processing capabilities of Excel. For this reason, Access, which has significantly greater processing capabilities than Excel, would be the underlying program for the census block version of the model. And while Access has greater processing capability, it does not have nearly the transparency of Excel. Given that transparency and ease of use are critical to the review and acceptance of a broadband investment model, PBA chose to provide the analysis in Excel at the census block group level rather than in Access at the census block level. The BCMPR, however, can be converted to calculate broadband at the census block level if necessary.

As required by the CAF Order, the model assumes an initial bandwidth requirement of 4 mbps down and 1 mbps up. In addition, the model includes engineering over-subscription assumptions to develop the total amount of bandwidth on the Company's MPLS transport network and the undersea cables that would be required to meet broadband service requirements at a user-defined range of assumed service take rates. These costs include the cost of the off-island transport and Internet peering provided via undersea cable from Puerto Rico to the Internet peering location in Florida.

The BCMPR estimates the last mile investment based on the amount of copper and fiber facility and structure required to connect customer locations in Puerto Rico to the broadband network. For the last mile portion of broadband investment, the BCMPR assumes different equipment depending on the length of the loop. For customer locations greater than 12,000 feet from the serving wire center, the customer locations are served by a remote DSLAM with a 2-wire copper cable no longer than 12,000 feet which is connected to the serving wire center using fiber cable. The remaining customer locations are connected to a DSLAM located at the wire center by a 2-wire copper cable. The cost of the NID and DSL modem to connect the customer location to the copper loop is also included in the cost of the last mile.

The cost of the middle mile includes the cost of the equipment and facilities to connect the serving wire center to the cable stations. This includes the investment associated with: 1) edge routers located at the serving wire center; 2) core routers, Network Access Translator ("NAT") and Juniper BRAs located in the

MPLS core; 3) the edge routers in the internet core; 4) the transmission equipment used to connect the Internet core to the cable stations; 5) the Softswitch; and 6) all associated fiber transport facilities from the serving wire center through to the cable stations.

Clearly, by using Puerto Rico-specific input prices and network topology requirements, as well as, territory-specific road and outside plant structure data, BCMPR takes into consideration the unique circumstances of an insular area. The model uses Puerto Rico specific material and labor costs, which reflect the appropriate cost of items on an island. In addition, the BCMPR includes the costs unique to Puerto Rico, such as undersea cable from Puerto Rico to the Internet peering location in Miami. Unlike the CQBAT model, BCMPR clearly accounts for the costs facing carriers serving an insular area.

The BCMPR results in a total support amount for Puerto Rico of just under $89M. This support amount is calculated based on the following assumptions:

- A total number of customer locations of 1.75M (1.63M locations from the Census data plus 0.68M Local Private Lines Not Being Supported by USF plus 0.45M Business Locations)
- A take rate for broadband services of 50% ( Take rate assumption may be varied by user)[7]
- Buried and underground structure sharing using same percentages as in CQBAT model
- Remote DSLAMs for customer connections greater than 12K feet and CO DSLAMs for the remaining connections;
- Transport via undersea cable from Puerto Rico to peering location in Florida.

The BCMPR produces a much more reasonable estimate of the amount of support appropriate for PRTC than the CQBAT. Where the CQBAT determines that support for PRTC should decrease by $35 million, BCMPR calls for support to Puerto Rico to increase from $36.8M to $88.9M. This increase in funding is appropriate in light of the overall increase in funding for price cap carriers under the CAF II of 67%. The

[7] The filed version of the BCM sets the broadband take rate assumption at 50%, consistent with the assumption used in the CQBAT model. Based on Company marketing research, actual take rates in Puerto Rico range in the 25% - 35% range across all providers in areas where broadband service is available. As PRT has stated to the Commission in the past, the low take rates are likely the result of much lower personal income levels in the territory relative to the mainland U.S. Also of note, in the US only 6% of Americans are without access to fixed broadband (23.7% in rural areas and 1.8% in non-rural areas). In contrast, in Puerto Rico, 51.6% of the population is without access to fixed broadband (84.8% in rural areas and 40.3% in non-rural areas). See *In the Matter of Inquiry Concerning the Deployment of Advanced Telecommunications Capability to All Americans in a Reasonable and Timely Fashion, and Possible Steps to Accelerate Such Deployment Pursuant to Section 706 of the Telecommunications Act of 1996, as Amended by the Broadband Data Improvement Act*, GN Docket No. 11-121, Eighth Broadband Progress Report, App. C (2012).

increase in funding from present levels will assist PRTC in meeting the broadband requirements of CAF II.

While the CQBAT model may be sufficient for the continental US, it does not take into account the costs faced by carriers serving insular areas. As such, the model does not meet the insular test put forth in the FCC's CAF Order. Because of the CQBAT's understandable shortcomings, PRTC has commissioned the development of its own broadband model which more accurately reflects the costs of providing broadband to Puerto Rico. This model uses Puerto Rico specific inputs and assumptions to determine a reasonable level of broadband support for the island.

## Overview of Broadband Cost Model: Puerto Rico

The Broadband Cost Model: Puerto Rico (BCMPR) is a forward-looking broadband cost model with a Puerto Rico-specific set of inputs used to determine the cost of providing broadband in Puerto Rico. The model includes the investment for last and middle mile segments and access to the nearest Internet peering point in the continental United States.

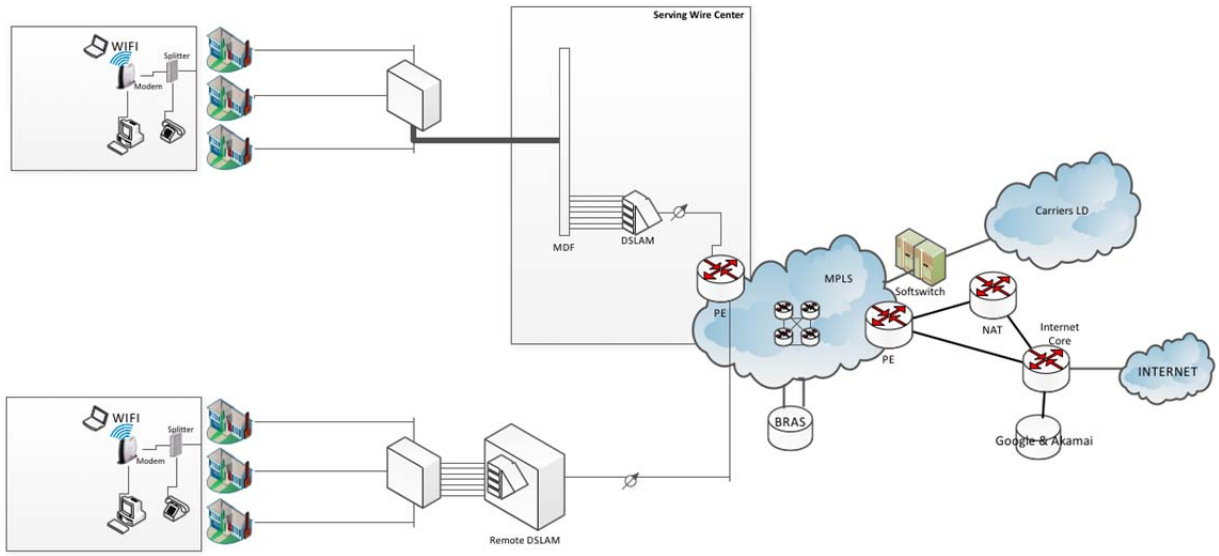


The model is composed of two separate excel files that link together. The files are:

- **PRTC BCM**
- **PRTC BCM LAST MILE**

In order for the model to function properly the two files must be placed in a directory labeled PRTC BCM on the C drive -- (C:/PRTC BCM). The two files work together to develop the cost of providing broadband in Puerto Rico. The first file, PRTC BCM, is an umbrella file that contains the toggles and user-adjustable inputs to manage the model.[8] In addition, the PRTC BCM file pulls in the results from the PRTC LAST MILE file and compiles them to develop the total investment, operating costs and support levels for Puerto Rico. The PRTC BCM file also has two sets of tabs that calculate the costs for the middle mile segment and for Internet access. The tabs for Internet access calculate the costs for Puerto Rico to connect to the nearest Internet peering point in Florida. The set of tabs for the middle mile

[8] The model also contains macros to assist the user in calculating results quickly. Macros must be enabled by the user to function.

segment includes the cost of the equipment and facilities to connect the serving wire center to the cable landing stations. This includes the investment associated with 1) edge routers located at the serving wire center; 2) core routers, NAT and Juniper BRAs located in the MPLS core; 3) the edge routers in the internet core; 4) the transmission equipment used to connect the Internet core to the cable stations; 5) the Softswitch and 6) all associated fiber transport facilities from the serving wire center through to the cable stations. The second file, PRTC Last Mile, develops the investment to connect customer locations in Puerto Rico to the serving wire center. This includes the investment for cable, structure, NIDs, modems, drops, and connecting electronics. Put together, these two files determine the cost of providing broadband in Puerto Rico.

## Broadband Cost Model: Puerto Rico – PRTC BCM File

### General Description:

The PRTC BCM file is the main overview file for the Broadband Cost Model: Puerto Rico. The file contains toggles and user adjustable inputs that flow elsewhere in the model to calculate individual components of broadband cost such as customer connection or last mile, middle mile transport and internet access. The results of these calculations then flow into the PRTC BCM file where they are combined to determine the total investment, operating cost and support levels for Puerto Rico.

### Specific Description: [9]

**Tab "Results"**

*Description:* "Results" displays the investment and support levels that result from the toggles and user adjustable inputs selected. Users can select the level at which results are displayed – Island, Municipio or Census Block Group. No inputs are included in the tab.

*Calculations:* "Results" calculates the annual broadband support, the total network investment, the investment for supported locations, the total locations and the total supported locations, the average support and investment per supported location, and the total investment for the last mile, transport, Edge Router/Juniper and MPLS/IP Core. Users can also select to view the results (Cell B24) by Island, Municipio or CBG.

**Tab "Toggles & User Adjustable Input"**

*Description:* "Toggles & User Adjustable Input" contains the toggles and user adjustable inputs for the cost model. Toggles allow users to determine specific model criteria such as the upper and lower bounds for the range of cost to be supported under CAF II. The default values of the toggles are set at $80 and $256 – the same values as found in the default version of CQBAT. Other toggles allow for the adjustment of variables such as the broadband customer take rate, the inclusion of broadband competitors and the inclusion of structure sharing assumptions. In addition, user adjustable inputs that flow into the last mile portion of the PRTC BCM file allow users to easily adjust some of the items that define the last mile.[10] This tab also lists the input support files where users may also adjust many of the input costs and algorithms used in the model.

*Calculations:* "Toggles & User Adjustable Input" contains no calculations.

[9] As a general guideline, blue color coding in the model indicates an input and green color coding indicates a calculation.

[10] In order for the changes in toggles and user adjustable inputs to flow into the supporting three files, the supporting files must be opened and the calculations run through by pressing F9 (Manual Recalculation) if necessary. If macros are enabled, the calculate button on the "Results" tab in the PRTC BCM file will do this.

**Tab "Broadband Cost"**

*Description:* "Broadband Cost" combines the monthly cost for the last mile, middle mile and internet access for a total broadband cost per CBG and then, depending on the user adjustable inputs, the support level per CBG.

*Calculations:* "Broadband Cost" contains the following calculations:

- Total Cost (Cells J8:J2601): Sums the loop, middle mile electronics, middle mile transport and internet access monthly cost to determine the total monthly cost for broadband by CBG.
- Support (Cells N8:N2601): Determines the support amount, if any, received for a CBG. The formula first checks to see if the unsupported broadband competitor toggle is on and if there is an unsupported broadband competitor. If both of those are true, then the CBG receives zero broadband support. If not, then the model compares the monthly cost amount to the upper and lower bounds. Should the monthly cost fall outside the bounds, then the support is once again zero. But, if the monthly cost falls within the upper and lower bounds, then the model calculates the annual support amount for the CBG. The annual support amount is determined by subtracting the monthly cost for the CBG from the lower bound, then multiplying the result by the number of subscribers[11] and annualizing for 12 months.

**Broadband Cost Model: Puerto Rico - PRTC BCM File: Internet Access**

**General Description:**

Internet access represents the cost of connecting PRT's Internet Core routers to the cable landing stations where the subsea cables serving Puerto Rico terminate, the cost of obtaining capacity on the subsea cables and the cost of the terrestrial transport and access to peering points located in Miami, Florida, the nearest internet exchange points to Puerto Rico.

The per customer location cost of the off-island transport and access to the peering locations is developed using the current cost to PRTC of the three 10 GBPS subsea cable systems the Company currently uses. The current cost to PRT is made up of three components:

1. The upfront indefeasible rights of use ("IRU") costs allocated over the life of the agreement on a per Mbps basis;

2. The monthly IP usage charge on a per Mbps basis as specified in the IRU agreements, and;

[11] Subscribers are determined by multiplying the total customer locations eligible to receive support by the user-adjustable take rate.

3. The monthly operation and maintenance costs on a per Mbps basis as specified in the IRU agreements.

The cost per customer location assumes that bandwidth of 5 MBPS is available for each customer location adjusting for the 10:1 oversubscription factor. The model also assumes a user adjustable default value of 28.1% for the portion of internet traffic originating on the island which may be handled by servers located in Puerto Rico that store frequently accessed Internet content from Google and Akamai. This assumption is based on the actual traffic volumes for the period January – July 2012.

**Specific Description:** [12]

**Tab "Internet Access Summary"**

*Description:* "Internet Access Summary" contains the inputs for the current annual cost associated with PRTC's three subsea cables connecting Puerto Rico with the peering locations in Florida. These costs include the upfront indefeasible rights of use ("IRU") fees and the annual usage, operation and maintenance costs. The inputs for each are as follows:

- IRU Investment
- IRU Term
- Maximum capacity of subsea cable
- Annual operations and maintenance costs
- Maximum annual usage costs per Gbps
- Percent Internet Traffic on Subsea cables

*Calculations:* "Internet Access Summary" contains the following calculations.

- Total Gbps over the life of the IRU (Cells D11:H11): IRU term (years) x Maximum Capacity (Gbps).
- Annual IRU Cost per Gbps (Cells D13:H13): IRU Investment / (Total Gbps over the life of the IRU).
- Annual Operating Payments per Gbps (Cells D17:H17): Total Operating & Maintenance expense / Max Gbps.
- Annual Payments per Gbps (Cells D21:H21): Annual Operating Payments per Gbps + Annual Usage Payments per Maximum Gbps.
- Annual Subsea Cost per Gbps (Cells D23:H23): Annual IRU Cost per Gbps + Annual Payments per Gbps.
- Annual Cost per Mbps (Cells D25:H25): Annual Cost per Gbps / 1,000 (Mbps/Gbps).

[12] As a general guideline, blue color coding in the model indicates an input and green color coding indicates a calculation.

- Average Annual Cost per Mbps (Cell J25): Sum of the Annual Cost per Mbps for the three Subsea Cables / 3.
- Annual Internet Cost per Mbps (Cell J29): Average Annual Subsea Cost per Mbps x Percent Traffic on Subsea Cable.
- Annual Cost per Customer Location (Cell J35): Annual Cost per MBPS x No. of MBPS per Location/Oversubscription Factor.
- Monthly Cost Per Location (Cell J37): Annual Cost/12.

**Tab "IRU Investment"**

*Description:* "IRU Investment" is an extract from PRTC's Continuing Property Records for the three subsea cables containing PRTC's IRU investment.

**Tab "Annual Payments"**

*Description:* "Annual Payments" contains the annual operating and maintenance costs for PRTC's three subsea cable systems. The list of inputs is as follows:

- Operations/Maintenance costs (TWIS & Columbus)
- Cost of Backhaul to Miami NAP (Columbus)
- Cross-connect (Cogent)
- Isle Verde Cable Station (PREPA Net)

*Calculations:* "Annual Payments" contains the following calculations:

- Total Monthly Payments per Undersea Cable System (Cells C12:G12): Sum Lines 7 through 11.
- Total Annual Payments (Cells C14:G14): Total Monthly Payments x 12.

**Tab "Off Island Traffic"**

*Description:* "Off Island Traffic" derives the amount of Internet traffic originating off island. The list of inputs is as follows:

- The amount of Google and Akamai Internet traffic accessed on the servers
- Off Island Internet Traffic

*Calculations:* "Off Island Traffic" contains the following calculations:

- Total Internet Traffic (Cells E7:G27): Sum Columns B through D.
- Average Internet Traffic (Cells B29:E29): Average of Rows 7 through 27.
- Percent Traffic (Cells B30:E30): Average Traffic by Type (Cells B29:E29) divided by Total Traffic (Cell E29).

## Broadband Cost Model: Puerto Rico - PRTC BCM File: Middle Mile

### General Description:

The Middle Mile portion of the BCM represents the investment from the serving wire centers up to and including the cable landing stations in Puerto Rico. The analysis includes the investment associated with 1) the Edge Router located at the wire center; 2) the MPLS core routers and Juniper servers; 3) the Internet Core; 4) the fiber link to the cable stations; and 5) all associated interoffice transport facility. The individual elements are described below.

### Serving Wire Center Edge Routers

An edge router is required at each serving wire center to connect the remote DSLAM or CO DSLAM, the cost of which is included in the Last Mile portion of the model, to the MPLS core. The investment is based on PRTC's cost for the Cisco 7609-S router including an allocation of the capitalized overhead costs.[13] Each edge router is configured with a 4-port 10 Gigabit Module to connect to the MPLS core and a 48-port 1 Gigabit Module to serve 43 DSLAMs reflecting the assumed fill factor of 90%. The model uses this capacity and cost information to determine an investment per DSLAM. The investment per DSLAM is then multiplied by the total number of DSLAMs in a municipio as determined in the Last Mile portion of the BCMPR. Next, an investment per subscriber is determined by dividing the investment per municipio by the number of subscribers in the municipio. Finally, this investment per subscriber is converted to a monthly cost by multiplying the investment by a monthly cost factor.[14]

### MPLS Core

The MPLS Core is made up of Cisco Core Routers that forward packets within the MPLS Core to other edge routers on the PRTC network and to the other networks. In addition the four core router locations contain Juniper Broadband Remote Access Servers ("BRAS") to authenticate and aggregate the traffic. The model places the core routers at the same four locations in Puerto Rico where PRTC current network has established its MPLS core: Bayamon, Caguas, Carolina and Mayaguez. The analysis reflects that on average the traffic will flow through two of the four core routers.

Core Routers:

The investment for the Core routers are based on PRTC's costs for Cisco's CRS-1 carrier routing system configured with a 40 GBPS Modular Service Card. The investment is $28.92/MBPS and is calculated by dividing the investment for the two routers used on average by 40,000 MBPS. A

[13] See EFI tab in the Last Mile Portion of the BCM for the development of the capitalized overhead costs.
[14] The monthly cost factor calculation is described in the Last Mile documentation.

per customer location cost is developed by calculating the cost of providing the bandwidth of 5 MBPS, adjusting for oversubscription. The oversubscription factor accounts for the fact that not all subscribers will be attempting to send traffic over the network at the same time. For example, a 10:1 factor assumes that at any given time only ten percent of the subscribers served by a particular router will be sending traffic at the same second.

Network Access Translator ("NAT"):

The investment for the NAT routers are based on PRTC's costs for Cisco's CRS-1 carrier routing system configured for 20 GBPS. The NAT allows of the reuse of public IP addresses with a private IP address due to the shortage of public IP addresses. The investment is $12.79/MBPS and is calculated by dividing the investment for the routers by 20,000 MBPS. A per customer location cost is developed by calculating the cost of providing the bandwidth of 5 MBPS, adjusting for oversubscription. The monthly cost per individual customer location is calculated by multiplying the customer location investment by a monthly cost factor, as described above.

Juniper Broadband Remote Servers

The investment for the Juniper BRAs are based on PRTC's cost of Juniper MX-960 equipment. Each server is configured to serve a maximum of 64,000 customer locations and is assumed to be filled to 90 percent capacity (57,600 customer locations). The resulting investment per customer location is $6.14. The monthly cost per individual customer location is calculated by multiplying the customer location investment by a monthly cost factor, as described above.

**IP Core**

The Internet Core uses Cisco IP Routers at two locations (Bayamon and Guaynabo – Pueblo Viejo) to forward traffic between the MPLS Core and the subsea cable landing stations. The IP Core is composed of four IP routers, two in each location, and is connected to the MPLS Core with an additional router at each location. On average Internet traffic will traverse three of these routers. The investment for the IP routers are based on the cost of the Cisco 7609-S router configured with two 4-port 10 Gigabit Ethernet Modules and one 48-port Gigabit Ethernet Module. The total investment is $4.69/MBPS, calculated by dividing the total investment for the three routers used on average by the total capacity of the routers (80 GBPS). The investment per MBPS is converted into a monthly cost by adjusting for oversubscription and applying the monthly cost factor described above.

**Softswitch**

A softswitch is an access server connected to the core routers in the MPLS core to originate or terminate landline phone calls in an IP-based switching and transport network. The investment is based on PRTC's cost for the Alcatel-Lucent ICS 5060 IP Call Server and supporting equipment.

The investment is calculated to be $17.52 per subscriber and is converted to a monthly cost by multiplying the investment by a monthly cost factor.

**Transport Facility**

The transport facility carries the packet from the serving wire center through the MPLS Core to the Internet Core. The cost per customer location is derived in a five-step process.

1. First, PRT's total fiber transport facility investment is calculated using the methodology described in the Last Mile documentation. The plant structure investment is based on the 2009 right-of-way study and is allocated between copper distribution and fiber transport and loop facilities based on the relative amount of each type of cable in PRT's current network. The fiber structure is allocated between aerial, buried and underground based on estimates provided by PRTC outside plant engineers. The investment for fiber cable is based on the assumption of a single foot of 144-strand fiber cable for each foot of transport structure.

2. The total transport investment is then divided by the total transport mileage to yield transport investment per mile. The total transport mileage is the sum of miles from each wire center to the Internet Core. Each of these paths consists of two legs; the distance from the wire center to the MPLS Core and the distance from the MPLS core to the Internet core. In addition the transport is designed in a ring configuration so that each wire center is connected to two MPLS Core routers and each Core router is in turn connected to two internet core locations. The miles for each wire center are calculated by summing the number of airline miles to the two closest MPLS Core routers and the distance from these MPLS Core routers to the two closest Internet Core routers.

3. The transport investment for each wire center is calculated by multiplying the transport investment per mile by the number of miles from each wire center to the Internet Core.

4. The investment per individual customer location is calculated by dividing the investment for each wire center by the total number of customer locations in the wire center.

5. The monthly cost per individual customer location is calculated by multiplying the customer location investment by a monthly cost factor.

**Link to Cable Landing Station**

PRTC uses three subsea cables to access the nearest Internet exchange point in Miami, Florida. These subsea cables terminate at two cable landing stations in Puerto Rico. The investment required to connect the IP Core to these two cable landing stations is made up of the electronics required to send the Internet traffic over the fiber connecting the IP Core to the landing stations and the fiber connecting the landing stations to PRTC's fiber ring. The costs associated with the fiber contained in the fiber ring are reflected in the transport investment described above.

The investment includes PRTC's cost for a Tellabs 7100 Optical Transport System. The Tellabs system is located at each cable station and used to forward the Internet traffic carried on the subsea cables on to the IP Core. The Tellabs transport system must be equipped with 10 GBPS optical ports at both ends of each fiber segment. A 2-degree port configuration is used on the fiber loop to connect the cable station to the fiber ring and a 3-degree configuration is used on each segment on the fiber ring connecting to the two IP Core locations.

Similar to the development of the per customer location cost related to the MPLS and Internet Core routers, individual customer location cost for the link to the cable landing stations is developed by calculating the capacity necessary to make broadband available to all customer locations at FCC mandated speeds adjusted for oversubscription. The estimated optical transmission investment to connect the IP Core to the landing stations is $28.70/MBPS. The investment for the terrestrial fiber loop is based on the cost analysis used for the fiber facility described in the Last Mile documentation.

In addition, PRT has partnered with Google and Akamai to store frequently accessed Internet content on servers located on PRTC's premises. Both Google and Akamai monitor PRTC's usage of the Internet content provided on behalf of their customers and download frequently accessed content to minimize the Internet access costs. This investment is based on PRTC's investment for two Cisco Catalyst 4900 Ethernet Switches each configured with a 10 Gigabit Module resulting in an investment of $1.99/MBPS. The costs savings associated with these two servers is included in the development of the Internet Access costs and reflect a reduction of 28.1% percent of the internet traffic carried on the subsea cables.

**Specific Description:** [15]

**Tab "Middle Mile Cost"**

*Description:* "Middle Mile Cost" calculates the monthly cost for middle mile electronics and transport. The tab uses data from the "Last Mile Investment" and "Middle Mile Detail" tabs.

*Calculations:* "Middle Mile Cost" contains the following calculations:

- Edge Router Investment per Wire Center (Cells C7:C82): Calculates the investment for edge routers on a wire center basis. The number of remote DSLAMs and CO DSLAMs are taken from the "Last Mile Results" tab and multiplied by the investment per electronics unit from the "Middle Mile Detail" tab to calculate the required investment.

[15] As a general guideline, blue color coding in the model indicates an input and green color coding indicates a calculation.

- Edge Router Investment per Subscriber (Cells D7:D82): Determines the edge router investment per subscriber by dividing the investment per wire center by the number of subscribers in the wire center.
- Edge Router (Cells F7:F82): Applies the monthly cost factor to the edge router investment per subscriber to calculate a monthly edge router cost per subscriber.
- Total Electronics (Cells I7:I82): Adds together the monthly cost per location for edge router, juniper routers and MPLS/IP Core to determine the monthly middle mile electronics cost.
- Middle Mile Transport Investment per Subscriber Cells (L7:L82): Divides the middle mile transport investment by wire center taken from the Middle Mile portion of the BCM by the subscribers per wire center to arrive at the middle mile transport investment per subscriber.
- Middle Mile Transport Total Monthly Cost (Cells N7:N82): Applies the monthly cost factor to the middle mile transport per subscriber to calculate a monthly middle mile transport cost per subscriber.

**Tab "Middle Mile Detail"**

*Description:* "Middle Mile Detail" contains the inputs for the development of the Middle Mile Cost, composed of the equipment and facilities connecting the serving wire center to PRTC's cable landing stations. The inputs are as follows and include Investment per Unit, number of required units and capacity in Mbps where applicable:

- Edge Router located at Serving Wire Center
- Juniper Broadband Remote Access servers
- MPLS Core Routers
- NAT Servers
- Softswitch
- IP Core Routers
- Cable Station Link Optical Transmission Equipment
- Facility to connect Cable Station to Fiber ring
- Cisco switches (Google & Akamai) for server aggregation
- Engineering Overhead Factor (See Documentation for Last Mile portion of PRTC Broadband Cost model EFI tab for the Overhead Factor).
- Capacity in Mbps
- Transport Facility Investment by Wire Center.

*Calculations:* "Middle Mile Summary" has the following calculations.

- Investment (Cells C9:M9 excluding I9 & C26:D26): Investment per Unit x Number of units.
- Investment (Cell I9): Sum of the Total Investment for three Cable Station Link transmission components (Cells G9:I9).
- Total Investment (Cells C11:M11 & C28:D28): Investment x [1 + Central Office Equipment Overhead Factor].
- Investment per Mbps (Cells C13:M13): Total Investment / Capacity in Mbps.
- Investment per Customer Location (Cells C16:M16): Investment per Mbps x No. of Mbps / Oversubscription.
- Total Investment per Customer Location (Cell N16): Sum of all Middle Mile MBPS elements in columns C through M.
- Monthly Cost per Customer Location (Cells C18:N18): Inv. Per Customer Location x Monthly Cost Factor.
- Service Capacity (Cells C32:D32): Capacity x Fill Factor.
- Monthly Cost per Costumer Location (Cells D34:E34): Investment x Monthly Cost Factor.

**Tab "Transport Facility Cost"**

*Description*: "Transport Facility Cost" contains the facility cost results developed in the Last Mile Cot Module. The Inputs are as follow:

- Total Transport Facility investment.
- Loop Feeder Investment and Footage.

*Calculations:* "Transport Facility Cost" contains one calculation:

- Total Structure Investment (Cell F13): Sum Cells C13:E13.
- Total Cable Investment (Cells F14): Sum Cells C14:E14
- Total of Structure and Cable Investment (Cells C15:F15): Sum Structure and Cable Investment.
- Total Cable Footage (Cell E17): Sum Cells C17:E17
- Investment per Foot (Cells C18:F18): Total Investment / Cable Footage
- 2 strand per Foot Investment (Cell E20): Investment per Foot for 48-strand fiber (Cell F18) divided by 24.

**Tab "Transport Investment"**

*Description*: "Transport Investment" allocates the total transport investment to each wire center. The Inputs are as follow:

- Total Transport Facility investment
- Miles from each Wire Center to the 2 closest MPLS Core locations
- Miles from each MPLS Core location to the two IP Core locations

*Calculations:* "Transport Investment" contains the following calculations:

- Average Miles to MPLS Core for San Juan (Cell D69): Average Cells D88 and D89.
- Average Miles to Internet Core for San Juan (Cell E69): Average Cells E88 and E89.
- San Juan (Row 90): Average of Rows 88 (Santurce Este) and Row 89 (Santurce Oeste)
- Total Miles from Wire Center to Internet Core (Cells F6:F82): Miles to MPLS Core (Column D) + Miles to Internet Core (Column E).
- Transport Investment (Cells G6:G82): Total Miles (Column F) x Transport Investment per Mile (Cell F85).
- Total Miles (Cell F83): Sum of Cells F6:F82.
- Transport Investment/Mile (Cell F85): Transport Investment (Cell F84)/ Total Miles (Cell F83).
- Transport Investment/Mile (Cell G85): Sum Transport Investment (Cells F6:F82).
- Average Miles to MPLS Core (Cells R6:R82 and R88:R89): Average Cells in Column N: Column Q)
- Average Miles to Internet Core (Cells AE6:AE82 and AE88:AE89): Average Cells in Column T: Column AD)

**Tab "Mileage"**

Description: "Mileage" the airline miles between PRT's wire centers. The inputs include the H and V coordinates for each of PRT's wire centers.

*Calculations:* "Mileages" calculations the airline miles between wire centers.

**Tab "Last Mile Results"**

*Description:* "Last Mile Results" pulls the investment, location, subscriber and electronics quantities from the Last Mile file.

*Calculations:* "Last Mile Results" contains only two calculations, apart from the links to the Last Mile file.

- Loop Investment (Cells H8:H2601): Sums the CWF and COE investment for a census block group.
- Remote DSLAMs and CO DSLAMS (Cells L8:L2601): Sums the number of Remote DSLAMs and CO DSLAMs in each CBG's municipio.

## Broadband Cost Model: Puerto Rico - PRTC Last Mile File

### General Description:

The Last Mile file of the BCMPR was developed from PBA's Forward-Looking Model (FLM) that has been used to determine UNE rates by Puerto Rico's Telecommunications Regulatory Board (TRB) for the past sixteen years. The function of the BCMPR's Last Mile file is to estimate the amount of copper and fiber facility and structure required to connect customer locations in Puerto Rico to the broadband network. Thus, the Last Mile file performs the same function as the CostPro platform that underlies the CQBAT model. However, because the BCMPR is designed exclusively to estimate provisioning and operating costs of a broadband network in Puerto Rico as opposed to the entire country, it is much more streamlined than the CQBAT model.

The CQBAT is designed to estimate costs for price cap carriers across the entire country at a census block level. This requires millions of records and calculations in order to estimate the amount of cable and cable structure required based on the size, density and number of customer locations for each census block across the country. In order to accomplish this task, the CQBAT model includes tremendous amounts of road mileage and customer location data. As a result, much of the model's focus is on calculating the amount of outside plant and outside plant structure required across the country. This requires several layers of assumptions and estimations that while most likely *generally* accurate will, by definition, be inaccurate for many individual areas. As discussed previously, CQBAT appears to be systematic in its underestimate of costs for insular areas served by price cap carriers.

By contrast, the BCMPR is designed to estimate costs for a single jurisdiction. Further, the model does not need to determine the amount of outside plant structure in Puerto Rico based on assumptions and estimations. Instead, the model relies on a recent PRT outside plant structure footage study. The 2009 Right-Of-Way (ROW) Analysis serves as the starting point of the BCMPR's cable calculations. The right-of-way study was performed by a geographic mapping firm and commissioned by PRT as part of the Company's effort to comply with legislation and the regulations of the Telecommunications Regulatory Board of Puerto Rico (TRB) regarding municipal taxation for the use of public rights of way. The study measured the mileage of public

right-of-way on all municipal and commonwealth property traversed by PRT's aerial or underground cables. The results of this study will be used to help determine the level of taxes the Company will pay the commonwealth and the municipalities for the use of the rights of way. The Right of Way Analysis provides an excellent starting point for the BCMPR's calculations for several reasons. The total linear feet of right of way used by PRT's outside plant is an excellent proxy for the total amount of outside plant structure required for a broadband network in Puerto Rico. Whereas the CQBAT relies on total road feet to estimate the amount of outside plant structure, the BCM relies on the actual measurement of PRTC's plant structure based on the current layout of the network along Puerto Rico's roads. The right of way study has other advantages over the CQBAT. First, the study was done within the recent past by an outside firm specializing in this type of work. Second, the purpose of this study was to determine the proper amount of property tax to be paid by PRTC. Because PRTC will pay taxes on each foot of right of way, there is no incentive to overstate the amount of right-of-way in its network. All of this means that the right-of-way study should provide a current, highly accurate amount of outside plant structure in the network.

As part of the Right of Way analysis, approximately 60,000 maps consisting of approximately 70,000 pages were reviewed along with high resolution maps of the island, as well as 30 cm high resolution photographs. The maps reviewed fell into three broad general categories. The first category consisted of maps produced on a CAD system and based on the NAD 83 reference datum. For these maps, a database was populated with the identified cable segments along the length of each cable and then an algorithm was used to remove any segments where multiple cables appeared in the same right of way. Each cable route was traced to eliminate all private rights of way. The remaining public right of way was included in the database. The second category of maps was detailed construction maps for specific cable routes. Unlike the first category of reviewed maps, these maps were not in digital form. Instead, a digital jpeg image of the map was used. Although these jpeg images did not include a scale, the highly detailed layouts provided allowed the establishment of geographical reference points. Once those reference points were established, the digital images were handled the same way as the maps in the first category.

The third category of maps consisted of cable network diagrams without scale or geographical reference. These diagrams were used in connection with precision maps of Puerto Rico to fit the cable routes to PRTC's rights of way. Once that was accomplished, these digital images were included in the overall database in the same manner as with the first group of maps.

As mentioned above, the right of way study documents the public quantities of right of way used by PRTC facilities. In addition to the public right of way, PRTC also has a limited amount of structure on private property in Puerto Rico. The amount of structure on private property was not included in the right of way study because, as private property, PRTC does not have to pay the usage tax on it. To account for this private property, the 49.3M feet of public right of way determined by the study were increased by 5% based on estimates from PRT's senior outside plant engineers. The result of this adjustment is a total feet of right of way in the current network in PRTC of 51.7M feet.

As the CQBAT model relies on road feet and the number of customer locations in a census block to estimate plant and plant structure requirements, the results of the Right of Way Analysis are used in the BCMPR to estimate the amount of structure footage in the forward-looking network. The BCMPR assumes that each foot of right-of-way contains one foot of structure. This is a very conservative assumption, given that two different structures may occupy the same right-of-way. For example, there are many places in Puerto Rico where buried structure containing transport cables is found in trenches below aerial cables containing loop distribution facilities. In the right of way analysis, these two structures would only be counted as a single foot because both types of structure are on the same right-of-way. However, in a forward-looking broadband network one would expect that the facilities would all be placed in the same structure, i.e., both customer connection and transport facilities would be placed in a single trench or on a single pole line. For these reasons, the right of way quantity for each wire center is a conservative, yet highly accurate, accounting of the amount of structure to be found in each municipality across Puerto Rico in the forward-looking broadband network.

Although the right of way study provides the quantity of structure in a wire center, it does not contain the data necessary to determine if that structure is for copper or fiber cable. Since under a broadband network capable of meeting the FCC's standards, copper is used exclusively for loops while fiber cable can support both loop and transport elements, it is important to allocate the structure feet appropriately, first between fiber and cable and then between fiber transport and fiber loop facilities. For this reason, the BCMPR first splits the amount of *structure* in the network between copper and fiber based on the relative amount of each type of *cable* in the network.[16] PRTC's Plant Accounting department maintains a database tracking the regulated plant in service for PRT. It contains data regarding PRTC's outside plant assets by type of plant, including individual cable types and sizes. Using this database, the BCM calculates the total feet of copper cable currently in service in PRTC's actual network. In total, PRTC currently has 142.6M feet of copper in service in its network. For fiber, data showing the amount of fiber currently in service in PRTC's actual network was broken out by how the fiber is used in the network. Using these data, the BCMPR calculated the amount of fiber in service in PRTC's network at 15.3M feet. The sum of the copper and fiber footage is equal to the total cable footage in the network. Based on total cable footage of 157.9 million and the relative quantities of fiber and copper, the model initially allocates 90.6% of the structure feet to copper and 9.4% of the structure feet to fiber in each municipality.[17]

The next step in the modeling process is to determine the amount of cable carried by the plant structure. One of the results of the Right of Way Analysis was the confirmation of the intuitive assumption that in the vast majority of cases the road system was built to reach and connect residential, commercial or governmental locations in Puerto Rico and that the Company's outside current outside plant was built along the road system to reach those customer locations. In the present analysis of the cost of a broadband network in Puerto Rico, the use of characteristics of the embedded network is helpful since the embedded network was engineered and built to reach most customer locations. This is consistent with the CAF modeling requirement that the broadband network reach and make available service to all customer

[16] This is the starting point for the amount of copper and fiber structure. As is discussed later on, the structure split is adjusted as part of the replacement of copper cable with fiber cable.
[17] As described below, the BCM adjusts this base quantity to reflect the increased use of fiber in a forward-looking network.

locations. Given that the current network consists of cables placed to reach most customer locations on the island, existing cable quantities represent a reasonable starting point for estimating the amount of cable required for the broadband network.

The BCMPR starts with the existing network cable quantities and performs a series of user-adaptable adjustments designed to reflect changes expected in moving from a legacy network to a broadband capable network. As many areas in Puerto Rico are currently served by broadband at or near the speeds required under the CAF Order, these areas will see only minimal adjustments intended to reflect the current relationship between the price of copper relative to fiber cable, the pushing of fiber closer to the customer and the optimization of cable sizes. For example, the model reduces the copper cable quantities by 5% over the Outside Plant Database. This reduction is to account for cables that could be combined in a forward-looking network. In the forward-looking network, the size of the network and the number of customer locations are assumed to be known at the start of the modeling process. But, in actual practice, the network was built in stages over time. On occasion, as the current network grew, PRTC added cable on an already established route to service increased demand. The cable footage for both of these cables would be included in the inventory from the outside plant database. In the forward-looking network, these two cables could be replaced with a single cable, reducing the footage of copper cable. To account for this reduction based on combined cables in the forward-looking network, the BCMPR reduces copper cable quantities by 5%. The BCMPR also adjusts the cable quantities to reflect the movement away from the use of large copper cables, particularly in feeder applications. Given the current high price of copper cable relative to fiber and fiber's much superior capability in providing advanced services, it is currently a common practice in the industry that when a large copper cable needs to be replaced it is replaced with fiber. PRT's engineers believe that in the forward-looking Fiber-To-The-Pedestal (FTTP) broadband network all copper cable greater than 900-pair would be replaced with fiber cable. The BCMPR incorporates this recommendation by removing all copper cable greater than 900-pair. The copper cable is then replaced with fiber feeder cable at a ratio of 4:1 reflecting the coupling of the additional fiber with the placement of centralized nodes within a customer serving areas.[18] As a result of the superior capacity of fiber and the placement of the centralized nodes, PRT's

[18] The ratio of copper cable to fiber feeder is a user adjustable input.

engineers estimate that every four feet of copper cable larger than 900 pair may be replaced by one foot of fiber cable in a forward-looking broadband fiber network. Along with the cable, the Last Mile Portion of the BCMPR also shifts the copper structure associated with the copper cable larger than 900 pair to fiber structure.

In addition to the cable and structure investment, the Last Mile Portion of the BCMPR also calculates the investment associated with electronics for the last mile. The electronics include such items as modems, NIDs drop terminals, remote DSLAMs and CO DSLAMs. For modems, NIDs, and drop terminals, the model calculates the investment needed to serve the broadband subscribers, where subscribers are determined by multiplying the total customer locations eligible to receive support by the user-adjustable take rate. For the remote DSLAMs and CO DSLAMs, the model uses a more complex algorithm to assign costs.

In the Last Mile file, remote DSLAMs serve locations that are greater than 12,000 feet from the central office. A PRTC loop study provides the percentage of loops greater than 12,000 feet in metro areas and the non-metro areas. The model uses this study to calculate the number of locations greater than 12,000 feet in a municipio by multiplying the total locations in the municipio (including local private lines not being supported by USF) by the percentage of loops greater than 12,000 feet. The model then determines on a municipio basis the number of remote DSLAMs required to serve these locations. Next, the locations greater than 12,000 feet are assigned to individual CBG's in the municipio. In order to do this, the model assumes that the least dense CBG's in a municipio are most likely to have locations greater 12,000 feet from the central office. Therefore, the locations in a muncipio greater than 12,000 feet are assigned to CBG's starting at the least dense and increasing in density. As an example, if a municipio (A) has 500 locations greater than 12,000 feet from the central office and three CBG's with 300 locations each, then the model would assume that all 300 locations in the least dense CBG (CBG3) would be greater than 12,000 feet from the central office. This leaves 200 locations still to be assigned. (500 locations > 12KFT – 300 locations assigned to CBG3 = 200 remaining locations). The model would then find the next densest CBG (CBG2), which would then be assigned 200 locations greater than 12,000 feet from the central office. That would leave 100 locations in CBG2 as well as all locations in CBG1 not served by remote DSLAMs.

**Example 1, Part 1**

| CBG | Density | Locations | R DSLAM Locations | Remaining Locations |
|---|---|---|---|---|
| CBG1 | 150 | 300 | 0 | 300 |
| CBG2 | 100 | 300 | 200 | 100 |
| CBG3 | 50 | 300 | 300 | 0 |
| **Total** | | **900** | **500** | **400** |

The model uses the ratio of locations per CBG to the total municipio locations to allocate the fixed portion of the remote DSLAM investment. Returning to the above example, municipio A needs 1 remote DSLAM to support the 500 locations greater than 12,000 feet. The fixed investment for this remote DSLAM is assumed to be $1,000. CBG3 would be allocated $600 of the investment since it has 60% of the municipio's locations greater than 12,000 feet. (300 locations > 12KFT / 500 total municipio locations = 60% * $1,000). CBG2 would be allocated $400 of the investment since it has 40% of the municipio's locations greater than 12,000 feet. (200 locations > 12KFT / 500 total municipio locations = 40% * $1,000). CBG1 would not have any investment for remote DSLAMs since it has no remote DSLAMs locations.

**Example 1, Part 2**

| CBG | Density | R DSLAM Locations | % R DSLAMs Locations | Investment |
|---|---|---|---|---|
| CBG1 | 150 | 0 | 0% | $0 |
| CBG2 | 100 | 200 | 40% | $400 |
| CBG3 | 50 | 300 | 60% | $600 |
| **Total** | | **500** | **100%** | **$1,000** |

After splitting out the fixed portion of the investment for remote DSLAMs, the model determines the port investment. The model only includes investment for those customers actually subscribing to the broadband network, which is determined by multiplying the total customer locations eligible to receive support by the user-adjustable take rate. Once the fixed and port investment for remote DSLAMs is calculated, the model develops the investment for CO DSLAMs.

The model assumes that the locations in a CBG not served by a remote DSLAM will be served by a CO DSLAM. The model first determines the number of CO DSLAMs needed for the entire municipio. This is done by dividing the total CO DSLAM locations, calculated as the total

locations minus the remote DSLAM locations, by the capacity for the CO DSLAM. To assign the fixed investment associated with these CO DSLAMs, the model then splits out the number of locations served by CO DSLAMs by CBG. Expanding on the hypothetical municipio A, CBG 3, the least dense CBG, will have 0 locations served by CO DSLAMs since all of its locations are served by remote DSLAMs. CBG2, the next densest, will have 100 locations served by CO DSLAMs since 200 of its locations are already served by remote DSLAMS. (300 locations – 200 locations > 12KFT = 100 remaining locations). CBG1, the densest CBG, will be entirely served by CO DSLAMS. (300 locations – 0 locations > 12KFT = 300 remaining locations).

**Example 1, Part 3**

| CBG | Density | Locations | R DSLAM Locations | CO DSLAM Locations |
|---|---|---|---|---|
| CBG1 | 150 | 300 | 0 | 300 |
| CBG2 | 100 | 300 | 200 | 100 |
| CBG3 | 50 | 300 | 300 | 0 |
| **Total** | | **900** | **500** | **400** |

Similar to the remote DSLAMS, the CO DSLAM fixed investment is allocated to individual CBG's based on the ratio of CO DSLAM locations in a CBG to the total CO DSLAM locations in the municipio. Finishing the example, municipio A also needs one CO DSLAM to service the 400 CO DSLAM locations in the municipio. The fixed investment for the CO DSLAM is assumed to be $500. CBG3 would be allocated $0 since it has no CO DSLAM locations. CBG2 would be allocated $125 in investment for the fixed portion of the CO DSLAM investment based on its 100 CO DSLAM locations. (100 locations / 400 total municipio locations = 25% * $500 = $125). CBG1 would have the remaining $375 in fixed CO DSLAM investment. (300 locations / 400 total municipio locations = 75% * $500 = $375).

**Example 1, Part 4**

| CBG | Density | DSLAM Locations | % DSLAM Locations | Investment |
|---|---|---|---|---|
| CBG1 | 150 | 300 | 75% | $375 |
| CBG2 | 100 | 100 | 25% | $125 |
| CBG3 | 50 | 0 | 0% | $0 |
| **Total** | | **400** | **100%** | **$500** |

After splitting out the fixed portion of the investment for DSLAMs, the model determines the port investment. The model only includes investment for those customers actually subscribing to

the broadband network based on a user-adjustable take rate assumption, where subscribers are determined by multiplying the total customer locations eligible to receive support by the user-adjustable take rate. The fixed and port investment for remote DSLAMs and CO DSLAMs are then combined with the cable and structure and other electronics investment and used to determine the per location investment for each CBG.

In the model, annual cost factors are then applied to convert the total per location investment for facilities and electronics into a monthly broadband revenue requirement. These cost factors are derived using ARMIS data from PRTC's FCC filing as well as the FCC's default cost of capital and depreciation rates. The ARMIS data comes from PRTC's 2008 ARMIS filing submitted to the FCC. For the cost of capital, the Last Mile file uses the default WACC of 11.25% that the FCC has previously concluded is forward-looking and compliant with TELRIC standards.[19] The cost of capital is used in combination with the cost of debt and capital structure of PRTC's parent América Móvil's to calculate the appropriate capital cost inputs for the BCMPR. The table below summarizes the cost of capital inputs in the BCMPR.[20]

**PRTC Required Rate of Return**

| | **Weight** | **Cost** | **WACC** |
|---|---|---|---|
| Long Term Debt | 10.24% | 5.70% | 0.58% |
| Common Equity | 89.76% | 11.88% | 10.67% |
| ***Total*** | ***100.00%*** | | ***11.25%*** |

PRTC's parent company América Móvil's actual cost of debt and capital structure are used since PRTC does not issue debt or equity instruments directly to investors. As a result, PRTC's cost of debt and market capital structure are not known or measurable. América Móvil's cost of debt can be obtained from the FORM 20-F filed with the SEC. América Móvil's market values of debt and equity have been taken from Value Line to calculate the capital structure used to derive the required rate of return.

**Capital Structure**

| | **Dollars in Billions** | **Percent** |
|---|---|---|

[19] The assumed WACC of 11.25% is an user adjustable input.
[20] Given values for the WACC, cost of debt and capital structure, the cost of equity may be calculated.

| | | |
|---|---|---|
| Long Debt | 8.723 | 10.24% |
| Market Cap. | 76.500 | 89.76% |
| Total | 85.223 | 100% |

The model uses a cost of equity of 11.88%. Calculating the appropriate cost of equity on a stand-alone basis is much more difficult than calculating the cost of debt or capital structure since it is not possible to observe the cost of equity. However, given known values of the WACC, cost of debt and capital structure, the corresponding cost of equity can be calculated. Basing cost of equity on the FCC's default WACC and the known values for cost of debt and capital structure is the most straight forward methodology available.

For depreciation lives and salvage values, the model uses the low end of the FCC's Safe Harbor Ranges. The FCC has stated that the lives specified in the safe harbor ranges are forward-looking[21] and the Supreme Court has concluded that the safe harbor ranges represent a reasonable starting point for calculating depreciation expense to be used in developing UNE prices.[22] Since these values are acceptable for UNE proceedings, the model employs them in the development of the forward-looking broadband rates as well.

**Specific Description:**[23]

**Tab "General Inputs"**

*Description:* "General Inputs" contains inputs for state and federal tax rates, ARMIS data, Puerto Rico Right of Way structure tax rate, Broadband Take Rate and the modem cost.

*Calculations:* "General Inputs" contains no calculations.

**Tab "Cable Cost Development"**

*Description:* "Cable Cost Development" holds the inputs to develop the fiber and copper cable and structure costs. The inputs are as follows:

- Copper Cable Investment Per Foot by Pair Size (Does Not Include Costs Related to Structure or Excavation)
- Drop Investment Placement and Material Per Line by Density Zone

[21] *See USF Inputs Order*, 14 FCC Rcd at 20344-45, para. 426 ("We believe this process of combining statistical analysis of historical information with forecasts of equipment replacement generates forward-looking projected lives that are reasonable estimates of economic lives and, therefore, are appropriate measures of depreciation.").
[22] *Verizon v. FCC*, 535 U.S. at 519-20.
[23] As a general guideline, blue color coding in the model indicates an input and green color coding indicates a calculation.

- Buried / Underground Structure Excavation/Restoration Per Foot by PRTC Cost Zone
- Fiber Cable Investment Per Foot by Strandsize
- Investment per 30 Foot Pole (in place cost)
- Total Number of Poles (Not Including Poles Owned by Power Company and Used by PRTC)
- Net Additional Aerial Structure Expense (For Poles Owned by Power and Cable Company and Used by PRTC)
- Conduit Investment Per Foot for Copper and Fiber
- Splice Box / Manhole Investment Per Unit: (Note: Splice boxes are used exclusively for copper and manholes are used exclusively for fiber).

*Calculations:* "Cable Cost Development" contains no calculations.

**Tab "Cable Quantity Development"**

*Description:* "Cable Quantity Development" contains the inputs for the development of cable and structure quantities. The list of inputs is as follows:

- Feet of Fiber and Copper Cable: Based on existing amounts in the network.

- Feet of Aerial, Buried and Underground Copper Cable: Based on the existing breakdown in the network.

- Feet of Fiber Cable in Total and by Transport, Loop Feeder and Distribution and Cell: Based on the existing total amount and breakdown in the network. Amount of cell feet allows for the removal of investment for non-supported services.

- Feet of Fiber Transport Cable Between Splice Box/ Manhole: Engineering assumption.

- Feet of Fiber Loop Cable Between Splice Box / Manhole for Urban/ Suburban and Rural: Engineering assumption.

- Feet of Copper Loop Cable Between Splice Box / Manhole: Engineering assumption.

- Structure Adjustment for ROW on Private Property: The ROW study used to determine structure amounts per CBG did not include private property, only public. This user adjustable input adjusts the amount of structure in a CBG for private property.

- Reduction in copper cable quantities over current levels in outside plant database: This user adjustable input reduces copper cable quantities over existing quantities.

- Breakpoint number of pairs for fiber replacement of large copper cables: Allows a user to replace large copper cables with fiber.

- Feet of copper cable replaced for every one foot of fiber: The feet of copper cable needed to substitute one foot of fiber as part of the copper fiber substitution adjustment.

- Percent of Lines Greater than 12K Feet – Metro and Non-Metro: Based on the existing network breakdown.

*Calculations:* "Cable Quantity Development" contains one calculation:

- Feet of Intermediate Modeled Fiber and Copper Cable (Cell C7): Sum of copper cable quantities plus Fiber for Transport, Loop Feeder and Distribution (Excludes Fiber for Cell)

**Tab "Cable Development Percentages"**

*Description:* "Cable Development Percentages" contains percentages used to develop the breakdown of cable between structure type, the breakdown by copper cable size, and the amount shared. The list of inputs is as follows:

- Copper Loop Cable by Structure per Density Zone
- Fiber Loop and Feeder Structure by Density Zone
- Fiber Transport by Density Zone
- Breakdown of Copper Cable by Size
- Distribution Structure Sharing - Percent Paid by Telco
- Feeder Structure Sharing - Percent Paid by Telco (Does not include Aerial structure sharing based on pole ownership percentages on tab "Cable Cost Development.")
- Transport Structure Sharing - Percent Paid by Telco

*Calculations:* "Cable Development Percentages" contains no calculations.

**Tab "DSLAM Inputs"**

*Description:* "DSLAM Inputs" contains inputs for Remote DSLAMs and CO DSLAMs. Both the remote and CO DSLAMs have a small and large size. The tab contains the fixed and port costs as well as the capacity information.

*Calculations:* "DSLAM Inputs" has no calculations.

**Tab "NID Inputs"**

*Description:* "NID Inputs" calculates the average per line cost of a NID.

*Calculations:* "NID Inputs" has the following calculations:

- Subtotal (Cells B15:D15, G15:I15): Subtotal of NID and Terminal block equipment from 1999 to 2003.
- Total (Cells B19:D19, G19:I19): Total of NID and Terminal block equipment from 1999 to 2010.
- Total Units / Lines (Cells E19, J19): Total of NID equipment units / lines and Terminal block equipment units / lines
- Weighted Cost Per Line for NIDs (Cells B22:D22): Weighted cost per NID type of equipment
- Total Weighted Cost for NIDs (Cell E22): Sum of weighted cost of three NID pieces of equipment
- Total Lines per Block Type (Cells G26:I26): Total terminal block count times lines per terminal block
- Total Lines for all Block Types (Cell J26): Sum of lines per block type
- Per Line Terminal Block Cost (Cells G27:I27): Terminal Block Cost with Overhead divided by Lines per Terminal Block
- Weighted Cost per Line (Cells G28:I28): Weighted cost per terminal block type of equipment
- Total Weighted Cost for Terminal Blocks (Cell J28): Sum of weighted cost of three terminal block pieces of equipment
- Line Weight (Cells E30, J30): Percent of line type (NID or Terminal Black) of total lines
- Weighted Cost (Cells E31, J31): Line weight by type times weighted cost per line by line type
- Average Per line Cost (Cell J32): Sum of weighted cost for NID and Terminal Block

**Tab "Capital Inputs"**

*Description:* "Capital Inputs" calculates the total return, depreciation and return factors for Cable and Wire Facilities (CWF), Central Office Equipment (COE), Support Plant and Materials and Supplies. Inputs to these calculations include the debt ratio, cost of debt, cost of capital and initial dollar cost.

*Calculations:* "Capital Inputs" contains the following calculations:

- Cost of Equity (Cell E9): Cost of capital minus the product of the debt ratio times cost of debt all divided by one minus the debt ratio.

- Value Period Begin (Cells B35:B69, B76:B110, B117:B151): For year one, the value in the initial dollar cost. For all other years, the value is previous year's value period end.

- Depreciation (Cells C35:C69, C76:C110, C117:C151): Initial dollar value divided by the rounded economic life.

- Value Period End (Cells D35:D69, D76:D110, D117:D151): Value Period Begin minus Depreciation Amount

- Debt Interest Payment (Cells E35:E69, E76:E110, E117:E151): Calculates the interest payment for the year shown in column A assuming an interest rate of the cost of debt, a total period of the rounded economic life, a present value of negative the amount debt financed and a future value of zero.

- Equity Dividend Payment (Cells F35:F69, F76:F110, F117:F151): Calculates the interest payment for the year shown in column A assuming an interest rate of the cost of equity, a total period of the rounded economic life, a present value of negative the amount equity financed and a future value of zero.

- Annual Charge (Cells G35:G69, G76:G110, G117:G151): For all years except the last year of economic life, the depreciation plus the debt interest payment plus the equity dividend payment. For the last year of economic life, the depreciation plus the debt interest payment plus the equity dividend payment less the salvage dollars.

- Annual Charge Difference (Cells H35:H69, H76:H110, H117:H151): The annual charge amount less the average annual charge amount less the adjustment for PV annual charge difference. The average annual charge is calculated as the total annual charge amount for all years divided by the rounded economic life.

- Present Value of Annual Charge Difference (Cells I35:I69, I76:I110, I117:I151): The annual charge difference divided by one plus the cost of capital raised to the year minus one.

- Adjust for Present Value Annual Charge Difference (Cells J35:J69, J76:J110, J117:J151): Calculated using the solver function, as described below.

- Levelized Annual Charge (Cells K35:K69, K76:K110, K117:K151): The total annual charge amount for all years divided by the rounded economic life plus the adjustment for present value annual charge difference.

*Solver:* The following cells require solver in order to calculate the depreciation and return factors:

- Cell A31: In Cell A31, select "Goal Seek" under "What if Analysis" in the "Data" ribbon in Microsoft Excel 2007. In the "Goal Seek" box, set cell A31 to 0 by changing cell B31.

- Cell A72: In Cell A72, select "Goal Seek" under "What if Analysis" in the "Data" ribbon in Microsoft Excel 2007. In the "Goal Seek" box, set cell A72 to 0 by changing cell B72.

- Cell A113: In Cell A113, select "Goal Seek" under "What if Analysis" in the "Data" ribbon in Microsoft Excel 2007. In the "Goal Seek" box, set cell A113 to 0 by changing cell B113.

**Tab "Copper"**

*Description:* "Copper" calculates the copper cable and structure investment as well as the investment for electronics, NIDs, modems and drops. Inputs include:

- Square Miles of Munipio
- Square Miles of CBG
- Labor Zone
- Loop Length Zone
- Municipio DZ
- Household Units
- Business Units
- Local Private Lines Not Being Supported by USF
- Right of Way Structure Footage: Public Property

*Calculations:* "Copper" contains the following calculations:

- Total Locations (Cells K7:K2600): Sum of household unit locations for a Census Block Group (CBG) plus Business Units plus the Local Private Lines Not Being Supported by USF. The network assumes the inclusion of local private lines not being supported by USF in order to achieve all possible economies of scale.

- Density (Cells L7:L2600): Density for a CBG calculated as total locations (including Local Private Lines Not Being Supported by USF) for a CBG divided by square miles for the CBG.

- Density Zone (Cells M7:M2600): Lookup of density zone for CBG based on CBG density calculated in column L.

- NIDs (Cells O7:O2600): The investment for NIDs is calculated as the number of supported locations times the broadband take rate times the NID average cost per line. (Note: The model does not include NIDs for Local Private Lines Not Being Supported by USF).

- Modems (Cells P7:P2600): The investment for modems is calculated as the number of supported locations times the broadband take rate times the cost for a modem. (Note: The model does not include modems for Local Private Lines Not Being Supported by USF).

- Large Remote DSLAMs For Locations >12K (Cells Q7:Q2600): Calculates the number of remote DSLAMs in a **Municipio** required for locations greater than 12,000 feet. The model assumes that real world engineering would determine the number of remote DSLAMs needed for a Municipio, rather than for a CBG. For this reason, the model calculates the number of remote DSLAMs for a Municipo and then allocates the investment to specific CBGs. In the formula, the model calculates the number of large remote DSLAMs for a Municipo that can be completely filled. This is done by finding the integer result of dividing the total locations in a Municipio greater than 12K feet by the capacity for a large remote DSLAM. The model then checks if a small remote DSLAM is capable of serving the remainder of the lines greater than 12K feet. If a small remote DLSAM will not suffice for the remainder, then an additional large remote DSLAM is included.

- Small Remote DSLAMs For Locations >12K (Cells R7:R2600): If necessary, the model includes a small DSLAM to serve the remainder of the lines greater than 12K feet after the large remote DSLAMs are filled. If a small DLSAM will suffice for the remainder, then one small remote DSLAM is included.

- Locations Associated with Remote DSLAMs (Cells S7:S2600): For this calculation, the model assumes that the least dense CBG's have the farthest locations and will need remote DSLAMs. Based on this assumption, the model allocates the remote DSLAM locations for the Municipio from the least dense CBGs to those with increasing density. Once all of the remote DSLAM locations for the Municipo have been allocated to CBG's, the remaining CBG's receive zero remote DSLAM lines. (Instead those CBG locations are assumed to be serviced by CO DSLAMs, the formulas for which are discussed below).

  Specifically, the first part of the equation calculates the total locations for the CBG (including Local Private Lines Not Being Supported by USF) and all other CBG's in the municipio with a lesser density. See:

  IF(SUMIFS($K$7:$K$2600,$B$7:$B$2600,B7,$L$7:$L$2600,"<="&L7)

  If the number of locations calculated for the CBG and all those CBG's of lesser density is less than or equal to the total remote DSLAM locations in a municipio then all of the locations for that CBG are assigned to a remote DSLAM. See:

  IF(SUMIFS($K$7:$K$2600,$B$7:$B$2600,B7,$L$7:$L$2600,"<="&L7)<=(SUMIF($B$7:$B$2600,B7,$K$7:$K$46)*IF(G7="Metro",'Cable Quantity Development'!$C$22,'Cable Quantity Development'!$C$23)),K7

  In contrast, if the number of locations calculated for all those CBG's of lesser density in the municipio are greater than the total remote DSLAM locations, then zero locations for that CBG are assigned to the remote DSLAM.

  IF(SUMIFS($K$7:$K$2600,$B$7:$B$2600,B7,$L$7:$L$2600,"<"&L7)>(SUMIF($B$7:$B$2600,B7,$K$7:$K$46)*IF(G7="Metro",'Cable Quantity Development'!$C$22,'Cable Quantity Development'!$C$23)),0

  Finally, if some, but not all of the locations in the CBG can be assigned to the remote DSLAMs, then the maximum remote DSLAM locations possible are assigned to the CBG. See:

  (SUMIF($B$7:$B$2600,B7,$K$7:$K$46)*IF(G7="Metro",'Cable Quantity Development'!$C$22,'Cable Quantity Development'!$C$23))-SUMIFS($K$7:$K$2600,$B$7:$B$2600,B7,$L$7:$L$2600,"<"&L7)))

- Fixed Investment for remote DSLAMs (Cells T7:T2600): Allocates a portion of the investment of the remote DSLAMs for the municipio to a CBG based on the ratio of remote DSLAM locations in the CBG to the total number of remote DSLAM locations in the municipio.

- Port Investment for Remote DSLAMs (Cells U7:U2600): Calculates the port investment for remote DSLAMs. The model only includes port investment for subscribers. (Subscribers are calculated as supported locations times broadband take rate. The model does not include investment for Local Private Lines Not Being Supported by USF).

- Large CO DSLAMs For Locations < 12K (Cells V7:V2600): Determines the number of CO DSLAMs required for a Municipio. Since the least dense locations are served by remote DSLAMs, the model only calculates the number of CO DSLAMs required based on the number of locations not already served by remote DSLAM. Similar to the remote DSLAMs, the model first fills the large CO DSLAMs completely. This is done by finding the integer result of dividing the total CO DSLAM locations for the munipio[24] by the CO DSLAM capacity. The model then checks if a small CO DSLAM is capable of serving the remainder of the lines less than 12K feet. If a small CO DLSAM will not suffice for the remainder, then an additional large CO DSLAM is included.

- Small CO DSLAMs For Locations < 12K (Cells W7:W2600): If necessary, the model includes a small CO DSLAM to serve the remainder of the lines less than 12K feet after the large CO DSLAMs are filled. If a small CO DLSAM will suffice for the remainder, then one small CO DSLAM is included.

- Fixed Investment for DSLAMs (Cells X7:X2600): Allocates a portion of the investment of the CO DSLAMs for the municipio to a CBG based on the ratio of CO DSLAM lines in the CBG to the total number of CO DSLAM lines in the municipio.

- Port Investment for CO DSLAMs (Cells Y7:Y2600): Calculates the port investment for CO DSLAMs. The model only includes port investment for subscribers. (Subscribers are calculated as supported locations times broadband take rate. The model does not include investment for Local Private Lines Not Being Supported by USF).

- Right of Way Structure Footage: Including Private Property (Cells AA7:AA2600): Determines the amount of right of way structure for a CBG after accounting for private property. The right-of-way study performed for PRTC included public property, but not private property. For this reason, the model adjusts the amount of public property to account for private property in order to determine the total structure footage for a CBG.

- Existing Structure Footage: % by CBG (Cells AC7:AC2600): The percentage of each CBG's structure footage to the total structure footage for Puerto Rico.

[24] This is calculated as total locations in the municipio less the remote DSLAM locations in the Municipio.

- Modeled Structure Footage (Cells AD7:AD2600): Adjusts structure footage to remove any structure associated with non-supported services, such as wireless. Uses the ratio of supported cable to total cable to adjust the structure footage.

- Copper Structure Footage (Cells AE7:AE2600): Splits out the copper portion of the modeled structure footage for the CBG. (The remaining modeled structure footage is assigned to fiber). The copper structure footage is calculated as the total structure footage for the CBG times the percent of copper cable to modeled cable, where modeled cable is the total cable quantity after non-supported services are removed. See:

  ('Cable Quantity Development'!$C$8/'Cable Quantity Development'!$C$7)*AD7

  The quantity of copper structure is then adjusted for the model's copper fiber substitution adjustment. The copper fiber substitution adjustment replaces copper cable with fiber cable as part of the model's development of a forward-looking network. As part of this adjustment, the model also shifts a corresponding portion of copper structure to fiber structure. The following portion of the formula makes the structure adjustment:

  (AC7*(SUM(Copper!$AD$7:$AD$2600)/(('Cable Quantity Development'!$C$9-'Cable Quantity Development'!$C$13)+'Cable Quantity Development'!$C$8*(1-'Cable Quantity Development'!$C$19)))*(SUM(Copper!$AO$7:$AQ$2601)-(SUM(Copper!$AR$7:$BC$2601)+SUM(Copper!$BP$7:$CA$2601)+SUM(Copper!$CN$7:$CY$2601))))

  The formula multiplies the CBG's structure footage percentage times the total structure shifted from copper to fiber.

- Cooper Structure Footage – Aerial (Cells AF7:AF2600): Determines the aerial copper structure by multiplying the total copper structure for the CBG times the percent of aerial structure for the CBG's density zone.

- Cooper Structure Footage – Underground (Cells AG7:AG2600): Determines the underground copper structure by multiplying the total copper structure for the CBG times the percent of underground structure for the CBG's density zone.

- Cooper Structure Footage – Buried (Cells AH7:AH2600): Determines the buried copper structure by multiplying the total copper structure for the CBG times the percent of buried structure for the CBG's density zone.

- Copper Structure Investment - Aerial (Cells AI7:AI2600): Aerial investment for a CBG is calculated as the ratio of copper aerial structure footage for the CBG to total aerial

structure footage (copper and fiber) times the total pole investment (number of poles times the investment per pole). This investment is only for aerial structure owned by the company. Any cost / revenue for shared aerial structure is included in the tab "Loop Cost."

- Copper Structure Investment - Underground (Cells AJ7:AJ2600): The underground copper structure investment is calculated as the cost for excavation / restoration plus the cost for splice boxes plus the cost for conduit. The model assumes that the excavation / restoration and splice boxes (but not conduit) could be shared by the Telco based on user adjustable inputs. The model also assumes a minimum of one splice box per CBG for underground investment.

- Copper Structure Investment – Buried (Cells AK7:AK2600): The buried copper structure investment is calculated as the cost for excavation / restoration plus the cost for splice boxes. The model assumes that both the cost for excavation / restoration and splice boxes could be shared by the Telco based on user adjustable inputs. The model also assumes a minimum of one splice box per CBG for buried investment.

- Total Existing Cable (Cells AM7:AM2600): Total existing cable (copper and fiber) for a CBG is calculated as the percent of structure in the CBG times the total existing cable. This is the amount of cable assumed to currently be in use in the CBG in the current network.

- Existing Copper Cable Footage (Cells AN7:AN2600): The copper cable in a CBG is calculated as the total existing cable in a CBG times the ratio of existing copper cable to total existing cable.

- Modeled Intermediate Cooper Cable Footage – Aerial (Cells AO7:AO2600): Calculates the percent of aerial copper cable less any user adjustable reduction in cable quantities over current levels in outside plant database.

- Modeled Intermediate Cooper Cable Footage – Buried (Cells AP7:AP2600): Calculates the percent of buried copper cable less any user adjustable reduction in cable quantities over current levels in outside plant database.

- Modeled Intermediate Cooper Cable Footage – Underground (Cells AQ7:AQ2600): Calculates the percent of underground copper cable less any user adjustable reduction in cable quantities over current levels in outside plant database.

- Final Modeled Copper Cable Footage By Pair Size – Aerial – 25 through 4200 Pair (Cells AR7:BC2600): Splits out the total aerial cable by pair size. May be set to zero if the copper cable for a specific pair size is shifted to fiber based on the user adjustable input for shifting copper cable to fiber.

- Modeled Copper Cable Investment By Pair Size – Aerial – 25 Pair through 4200 Pair (Cells BD7:BO2600): The cable cost by pair size for aerial cable times the feet of aerial cable per pair size.

- Final Modeled Copper Cable Footage By Pair Size – Buried – 25 through 4200 Pair (Cells BP7:CA2600): Splits out the total buried cable by pair size. May be set to zero if the copper cable for a specific pair size is shifted to fiber based on the user adjustable input for shifting copper cable to fiber.

- Modeled Copper Cable Investment By Pair Size – Buried – 25 Pair through 4200 Pair (Cells CB7:CM2600): The cable cost by pair size for buried cable times the feet of buried cable per pair size.

- Final Modeled Copper Cable Footage By Pair Size – Underground – 25 through 4200 Pair (Cells CN7:CY2600): Splits out the total underground cable by pair size. May be set to zero if the copper cable for a specific pair size is shifted to fiber based on the user adjustable input for shifting copper cable to fiber.

- Modeled Copper Cable Investment By Pair Size – Underground – 25 Pair through 4200 Pair (Cells CZ7:DK2600): The cable cost by pair size for underground cable times the feet of underground cable per pair size.

- Total Modeled Network Drop Terminal Investment (Cells DM7:DM2600): Calculates the drop investment for a CBG as the drop investment for non-aerial lines plus the drop investment for aerial lines. For non-aerial lines, the model assumes a buried drop. For aerial lines, the model includes a drop terminal in addition to the material and placement costs. The model only includes drop investment for subscribers. (Subscribers are calculated as locations times broadband take rate. The model does not include drop investment for Local Private Lines Not Being Supported by USF).

- Copper Investment: Structure and Cable (Cells DN7:DN2600): Total structure and cable investment per CBG.

**Tab "Fiber"**

*Description:* "Fiber" calculates the fiber cable and structure investment. A number of inputs are taken from the "Copper" tab. These include:

- Total Locations
- Labor Zone
- Density Zone
- Right of Way Structure Footage: Public Property
- Right of Way Structure Footage: Including Private Property
- Existing Structure Footage: % by CBG
- Modeled Structure Footage
- Existing Total Cable

*Calculations:* "Fiber" contains the following calculations:

- Fiber Transport Structure Footage (Cells L7:L2600): Splits out the fiber transport portion of the modeled structure footage for the CBG. The fiber transport structure footage is calculated as the total structure footage for the CBG times the percent of fiber transport cable to modeled cable, where modeled cable is the total cable quantity after non-supported services are removed.

- Fiber Transport Structure Footage – Aerial (Cells M7:M2600): Determines the aerial fiber transport structure by multiplying the total fiber transport structure for the CBG times the percent of aerial transport structure for the CBG's density zone.

- Fiber Transport Structure Footage – Underground (Cells N7:N2600): Determines the underground fiber transport structure by multiplying the total fiber transport structure for the CBG times the percent of underground transport structure for the CBG's density zone.

- Fiber Transport Structure Footage – Buried (Cells O7:O2600): Determines the buried fiber transport structure by multiplying the total fiber transport structure for the CBG times the percent of buried transport structure for the CBG's density zone.

- Fiber Transport Structure Investment- Aerial (Cells P7:P2600): Aerial investment for a CBG is calculated as the ratio of fiber aerial transport structure footage for the CBG to total aerial structure footage (copper and fiber) times the total pole investment (number of poles times the investment per pole). This investment is only for aerial structure owned by the company. Any cost / revenue for shared aerial structure is included in the tab "Loop Cost".

- Fiber Transport Structure Investment - Underground (Cells Q7:Q2600): The underground fiber transport structure investment is calculated as the cost for excavation / restoration plus the cost for manholes plus the cost for conduit. The model assumes that both the cost for excavation / restoration and manholes (but not conduit) could be shared by the Telco based on user adjustable inputs. For the manhole cost, the model first determines the number of manholes required for the Municipio and then calculates the investment for them. This investment is then allocated to each CBG in the Municipio based on the ratio of the CBG's fiber underground transport structure to the total Municipio fiber underground transport structure.

- Fiber Transport Structure Investment – Buried (Cells R7:R2600): The buried fiber transport structure investment is calculated as the cost for excavation / restoration plus the cost for manholes. The model assumes that the cost for excavation / restoration and manholes could be shared by the Telco based on user adjustable inputs. For the manhole cost, the model first determines the number of manholes required for the Municipio and then calculates the investment for them. This investment is then allocated to each CBG in the Municipio based on the ratio of the CBG's fiber underground transport structure to the total Municipio fiber underground transport structure.

- Fiber Loop Distribution Structure Footage (Cells S7:S2600): Splits out the fiber loop distribution portion of the modeled structure footage for the CBG. The fiber loop distribution structure footage is calculated as the total structure footage for the CBG times the percent of fiber loop distribution cable to modeled cable, where modeled cable is the total cable quantity after non-supported services are removed.

- Fiber Loop Distribution Structure Footage – Aerial (Cells T7:T2600): Determines the aerial fiber loop distribution structure by multiplying the total fiber loop distribution structure for the CBG times the percent of aerial fiber loop distribution structure for the CBG's density zone.

- Fiber Loop Distribution Structure Footage – Underground (Cells U7:U2600): Determines the underground fiber loop distribution structure by multiplying the total fiber loop distribution structure for the CBG times the percent of underground fiber loop distribution structure for the CBG's density zone.

- Fiber Loop Distribution Structure Footage – Buried (Cells V7:V2600): Determines the buried fiber loop distribution structure by multiplying the total fiber loop distribution structure for the CBG times the percent of buried fiber loop distribution structure for the CBG's density zone.

- Fiber Loop Distribution Structure Investment- Aerial (Cells W7:W2600): Aerial investment for a CBG is calculated as the ratio of fiber aerial loop distribution structure footage for the CBG to total aerial structure footage (copper and fiber) times the total pole investment (number of poles times the investment per pole). This investment is only for aerial structure owned by the company. Any cost / revenue for shared aerial structure is included in the tab "Loop Cost".

- Fiber Loop Distribution Structure Investment - Underground (Cells X7:X2600): The underground fiber structure investment is calculated as the cost for excavation / restoration plus the cost for manholes plus the cost for conduit. The model assumes that the excavation / restoration and manholes (but not conduit) could be shared by the Telco based on user adjustable inputs. The model also assumes a minimum of one manhole per CBG for underground investment.

- Fiber Loop Distribution Structure Investment – Buried (Cells Y7:Y2600): The buried fiber structure investment is calculated as the cost for excavation / restoration plus the cost for manholes. The model assumes that the excavation / restoration and manholes could be shared by the Telco based on user adjustable inputs. The model also assumes a minimum of one manhole per CBG for buried investment.

- Fiber Loop Feeder Structure Footage (Cells Z7:Z2600): Splits out the fiber loop feeder portion of the modeled structure footage for the CBG. The fiber loop feeder structure footage is calculated as the total structure footage for the CBG times the percent of fiber loop feeder cable to modeled cable, where modeled cable is the total cable quantity after non-supported services are removed.

  The quantity of fiber loop feeder structure is then adjusted for the model's copper fiber substitution adjustment. The copper fiber substitution adjustment replaces copper cable with fiber cable as part of the model's development of a forward-looking network. As part of this adjustment, the model also shifts a corresponding portion of copper structure to fiber structure. The following portion of the formula adds the additional structure to the fiber loop feeder:

  J7*(SUM(Copper!$AD$7:$AD$2601)/(('Cable Quantity Development'!$C$9-'Cable Quantity Development'!$C$13)+'Cable Quantity Development'!$C$8*(1-'Cable Quantity Development'!$C$19)))*(SUM(Copper!$AO$7:$AQ$2601)-(SUM(Copper!$AR$7:$BC$2601)+SUM(Copper!$BP$7:$CA$2601)+SUM(Copper!$CN$7:$CY$2601))))

  The formula multiplies the CBG's structure footage percentage times the total structure shifted from copper to fiber.

- Fiber Loop Feeder Structure Footage – Aerial (Cells AA7:AA2600): Determines the aerial fiber feeder distribution structure by multiplying the total fiber feeder distribution structure for the CBG times the percent of aerial fiber loop feeder structure for the CBG's density zone.

- Fiber Loop Feeder Structure Footage - Underground (Cells AB7:AB2600): Determines the underground fiber loop feeder structure by multiplying the total fiber loop feeder structure for the CBG times the percent of underground fiber loop feeder structure for the CBG's density zone.

- Fiber Loop Feeder Structure Footage – Buried (Cells AC7:AC2600): Determines the buried fiber loop feeder structure by multiplying the total fiber loop feeder structure for the CBG times the percent of buried fiber loop feeder structure for the CBG's density zone.

- Fiber Loop Feeder Structure Investment- Aerial (Cells AD7:AD2600): Aerial investment for a CBG is calculated as the ratio of fiber aerial loop feeder structure footage for the CBG to total aerial structure footage (copper and fiber) times the total pole investment (number of poles times the investment per pole). This investment is only for aerial structure owned by the company. Any cost / revenue for shared aerial structure is included in the tab "Loop Cost".

- Fiber Loop Feeder Structure Investment - Underground (Cells AE7:AE2600): The underground fiber structure investment is calculated as the cost for excavation / restoration plus the cost for manholes plus the cost for conduit. The model assumes that the excavation / restoration and manholes (but not conduit) could be shared by the Telco based on user adjustable inputs. The model also assumes a minimum of one manhole per CBG for underground investment.

- Fiber Loop Feeder Structure Investment – Buried (Cells AF7:AF2600): The buried fiber structure investment is calculated as the cost for excavation / restoration plus the cost for manholes. The model assumes that the excavation / restoration and manholes could be shared by the Telco based on user adjustable inputs. The model also assumes a minimum of one manhole per CBG for buried investment.

- Fiber Cable Footage (Cells AI7:AI2600): The fiber cable in a CBG is calculated as the total existing cable in a CBG times the ratio of existing fiber cable to total existing cable.

- Fiber Cable Footage: Loop Distribution (Cells AJ7:AJ2600): Splits out the fiber loop distribution cable for a CBG my multiplying the ratio of fiber loop distribution cable to total fiber cable by the fiber cable in the CBG.

- Fiber Cable Footage: Loop Distribution – Aerial (Cells AK7:AK2600): Calculates the amount of aerial loop distribution cable by multiplying the total fiber loop distribution cable in the CBG times the aerial percentage for the CBG's density zone.

- Fiber Cable Footage: Loop Distribution – Underground (Cells AL7:AL2600): Calculates the amount of underground loop distribution cable by multiplying the total fiber loop distribution cable in the CBG times the underground percentage for the CBG's density zone.

- Fiber Cable Footage: Loop Distribution – Buried (Cells AM7:AM2600): Calculates the amount of buried loop distribution cable by multiplying the total fiber loop distribution cable in the CBG times the buried percentage for the CBG's density zone.

- Fiber Cable Investment: Loop Distribution – Aerial (Cells AN7:AN2600): The aerial fiber cable investment per foot times the feet of aerial cable. The model assumes the smaller 8 strand fiber cable for loop distribution.

- Fiber Cable Investment: Loop Distribution – Underground (Cells AO7:AO2600): The underground fiber cable investment per foot times the feet of underground cable. The model assumes the smaller 8 strand fiber cable for loop distribution.

- Fiber Cable Investment: Loop Distribution – Buried (Cells AP7:AP2600): The buried fiber cable investment per foot times the feet of buried cable. The model assumes the smaller 8 strand fiber cable for loop distribution.

- Fiber Cable Footage: Loop Feeder (Cells AQ7:AQ2600): Splits out the fiber feeder distribution cable for a CBG my multiplying the ratio of fiber feeder distribution cable to total fiber cable by the fiber cable in the CBG. Added to this quantity is the copper cable shifted to fiber from the copper fiber substitution adjustment. The user may adjust the ratio at which fiber cable is substituted for copper cable.

- Fiber Cable Footage: Loop Feeder – Aerial (Cells AR7:AR2600): Calculates the amount of aerial loop feeder cable by multiplying the total fiber loop feeder cable in the CBG times the aerial percentage for the CBG's density zone.

- Fiber Cable Footage: Loop Feeder – Underground (Cells AS7:AS2600): Calculates the amount of underground loop feeder cable by multiplying the total fiber loop feeder cable in the CBG times the underground percentage for the CBG's density zone.

- Fiber Cable Footage: Loop Feeder – Buried (Cells AT7:AT2600): Calculates the amount of buried loop feeder cable by multiplying the total fiber loop feeder cable in the CBG times the buried percentage for the CBG's density zone.

- Fiber Cable Investment: Loop Feeder – Aerial (Cells AU7:AU2600): The aerial fiber cable investment per foot times the feet of aerial cable. The model assumes a 48 strand fiber cable for loop feeder.
- Fiber Cable Investment: Loop Feeder – Underground (Cells AV7:AV2600): The underground fiber cable investment per foot times the feet of underground cable. The model assumes a 48 strand fiber cable for loop feeder.

- Fiber Cable Investment: Loop Feeder – Buried (Cells AW7:AW2600): The buried fiber cable investment per foot times the feet of buried cable. The model assumes a 48 strand fiber cable for loop feeder.

- Fiber Cable Footage: Transport (Cells AX7:AX2600): Splits out the fiber transport cable for a CBG my multiplying the ratio of fiber transport cable to total fiber cable by the fiber cable in the CBG.

- Fiber Cable Footage: Transport – Aerial (Cells AY7:AY2600): Calculates the amount of aerial transport cable by multiplying the total fiber transport cable in the CBG times the aerial percentage for the CBG's density zone.

- Fiber Cable Footage: Transport – Underground (Cells AZ7:AZ2600): Calculates the amount of underground transport cable by multiplying the total fiber transport cable in the CBG times the underground percentage for the CBG's density zone.

- Fiber Cable Footage: Transport – Buried (Cells AA7:AA2600): Calculates the amount of buried transport cable by multiplying the total fiber transport cable in the CBG times the buried percentage for the CBG's density zone.

- Fiber Cable Investment: Transport – Aerial (Cells BB7:BB2600): The aerial fiber cable investment per foot times the feet of aerial cable. The model assumes a 144 strand fiber cable for transport.

- Fiber Cable Investment: Transport – Underground (Cells BC7:BC2600): The underground fiber cable investment per foot times the feet of underground cable. The model assumes a 144 strand fiber cable for transport.

- Fiber Cable Investment: Transport – Buried (Cells BD7:BD2600): The buried fiber cable investment per foot times the feet of buried cable. The model assumes a 144 strand fiber cable for transport.

- Total Loop Fiber Investment: Structure and Cable (Cells BF7:BF2600): Sum of loop distribution and feeder structure and cable investment.

- Total Fiber Transport Investment: Structure and Cable (Cells BG7:BG2600): Sum of transport structure and cable investment.

**Tab "Loop Cost"**

*Description:* "Loop Cost" calculates the monthly revenue requirement per line for a CBG. A number of inputs are taken from the "Copper" and "Fiber" tabs. These include:

- Copper Network Investment
- Fiber Investment
- NID, Drop and Modem Investment
- COE Investment for Locations
- COE Investment for Subscribers
- Subscribers with Local Private
- Subscribers

*Calculations:* "Loop Cost" contains the following calculations:

- CWF Investment (Cells L8:L2601): Calculates the total CWF investment per line by adding together the per line investment for the copper and fiber investment and the per line investment for NID, Drop and Modems. The per line investment for the copper and fiber cable is calculated by dividing the copper and fiber investment by the Subscribers with Local Private. Subscribers with Local Private are calculated as the number of locations times the take rate plus the Local Private Lines Not Being Supported by USF. This takes into account any economies of scale that may be present by including the Local Private Lines Not Being Supported by USF. The per line investment for the NID, Drop and Modems is calculated by dividing the investment for NID, Drop and Modems by the Subscribers. Subscribers are calculated as the number of locations times the take rate and does not include the Local Private Lines Not Being Supported by USF. This is the appropriate divisor because the NIDs, Drops and Modems did not include investment for Local Private Lines Not Being Supported by USF.

- COE Investment (Cells M8:M2601): Calculates the total COE investment per line by adding together the per line investment for COE investment for the network plus the per line investment for COE investment for subscribers. The per line investment for COE investment for the network is calculated as the COE investment for the network divided by the Subscribers with Local Private. The Subscribers with Local Private are calculated as the number of locations times the take rate plus the Local Private Lines Not Being Supported by USF. This divisor is used because the COE investment for the network was developed including Local Private Lines Not Being Supported by USF. The per line cost for the COE investment for subscribers was calculated by dividing the COE investment for subscribers by Subscribers. This divisor was used because the COE investment for subscribers was calculated only for subscribers and did not include investment for Local Private Lines Not Being Supported by USF.

- Annual Rev Req (Cells N8:N2601): The annual revenue requirement for a CBG is calculated as the sum of CWF Investment x the Annual Cost Factor for CWF plus COE Investment x the Annual Cost Factor for COE.

- Aerial Structure Expense (Cells O8:O2601): Calculates the additional aerial structure expense / revenue by subscriber for shared aerial structure. The model excludes the portion of the expense / revenue associated with aerial fiber transport.

- ROW Structure Tax (Cells P8:P2601): Calculates the ROW structure tax (if applicable) per subscriber for structure on public property.

- Monthly Rev Req (Cells Q8:Q2601): The monthly revenue requirement is calculated as the sum of the annual revenue requirement, the aerial structure expense and the ROW Structure Tax, all divided by 12 months.

**Tab "Transport"**

*Description:* "Transport" sums the total transport investment for the network. A number of inputs are taken from the "Fiber" tab. These include:

- Aerial Placement, Owned Poles, and Conduit for Fiber
- Aerial Fiber Cable Investment
- Underground Placement, Owned Poles, and Conduit for Fiber
- Underground Fiber Cable Investment
- Buried Placement, Owned Poles, and Conduit for Fiber
- Buried Fiber Cable Investment

*Calculations:* "Transport" contains the following calculations:

- Total Cable and Placement Investment for Aerial (Cell D12): Sum of Aerial Placement, Owned Poles, and Conduit for Fiber and Aerial Fiber Cable Investment.

- Total Cable and Placement Investment for Underground (Cell E12): Sum of Underground Placement, Owned Poles, and Conduit for Fiber and Underground Fiber Cable Investment.

- Total Cable and Placement Investment for Buried (Cell F12): Sum of Buried Placement, Owned Poles, and Conduit for Fiber and Buried Fiber Cable Investment.

- Total Placement, Owned Poles, and Conduit for Fiber (Cell G10): Sum of Aerial, Underground and Buried Placement, Owned Poles, and Conduit for Fiber.

- Total Fiber Cable Investment (Cell G11): Sum of Aerial, Underground and Buried Fiber Cable Investment.

- Total Cable and Placement Investment (Cell G12): Sum of Aerial, Underground and Buried Total Cable and Placement Investment

**Tab "ACF's"**

*Description:* "ACF's" calculates the annual cost factors. Inputs for this tab are pulled from the "General Inputs" and "Capital Inputs" tab. These include:

*Calculations:* "ACF's" contains the following calculations:

- CWF Maintenance Factor (Cell E25): Calculated as CWF expenses divided by CWF investment.

- COE Maintenance Factor (Cell E26): Calculated as COE expenses divided by COE investment for switching, operations and transmission.

- GSF Maintenance Factor (Cell E27): Calculated as network and general support expenses divided by general support assets.

- Netw. Supp. & Gen. Supp. Factor (Cell E28): Calculated as network and general support expenses divided by total plant in service.

- Network Operations Factor (Cell E30): Calculated as network operations expenses divided by total plant in service.

- Corporate Operations Factor (Cell E38): Calculated as corporate operations expenses divided by total plant in service.

- Operating Taxes Factor (Cell E40): Calculated as operating taxes divided by total plant in service.

- Customer Service Factor (Cell E42): Calculated as customer service expenses divided by total plant in service.

- Secondary Investment Factors – Support Plant (Cell E51): Calculated as general support assets divided by total plant in service less general support assets.

- Secondary Investment Factors – Materials and Supplies (Cell E52): Calculated as materials and supplies assets divided by total plant.

- Direct Expense (Cells D64:E64): Calculated as the sum of the Expenses Factors.

- Support Plant Depreciation (Cells D65:E65): Calculated as the product of Support Investment Factor and Support Plant Depreciation Factor.

- Total Expenses (Cells D66:E66): Calculated as the sum of Direct Expenses and Support Plant Depreciation.

- Direct Return Factor (Cells D68:E68): CWF & COE Return Factor.

- Support Plant Return Factor (Cells D69:E69): Calculated as the product of Support Investment Factor and Return Factor.

- Materials & Supplies Return Factor (Cells D70:E70): Calculated as the product of Materials & Supplies Investment Factor and Return Factor.

- Total Return Factor (Cells D71:E71): Calculated as the sum Direct, Support Plant and Materials & Supplies Return Factors.

- Income Tax Gross-up (Cells D74:E74): Calculated as the product of the Total Return Factor and the Income Tax Gross-up Factor.

- Annual Cost Factor (Cells D76:E76): Calculated as the sum of Total Expenses, Total Return and Income Tax Gross-up.

**Tab "EFI"**

*Description:* "EFI" calculates an EF&I factor for outside plant and central office equipment. These calculated EF&I factors are then compared to those used in the analysis to demonstrate that the EF&I factors used are conservative. The tab includes the inputs required to calculate an EF&I factor for outside plant and central office equipment.

*Calculations:* "EFI" contains the following calculations:

- Total Overhead – Outside Plant (Cell B18): Sum of overhead for outside plant.
- Total Overhead – COE (Cell C18): Sum of overhead for COE.
- Total Materials – Outside Plant (Cell B22): Sum of materials for outside plant.
- Total Materials and Contract Labor – COE (Cell C22): Sum of materials for COE.
- Overhead Percent Calculated – Outside Plant (Cell B24): Overhead for outside plant divided by materials for outside plant.
- Overhead Percent Calculated – COE (Cell C24): Overhead for COE divided by materials for COE.

# Attachment B

# CQBAT Results Analysis

## A Comparison of Insular v. Non-Insular Areas

Parrish, Blessing and Associates, Inc.
3975 University Drive, Suite 215
Fairfax, VA 22030

January 10, 2013

**Introduction and Executive Summary**

The Connect America Fund (CAF) Order released by the Commission in November of 2011 explicitly stated that any model adopted for the purpose of determining federal universal service support for price cap carriers must account for the unique circumstances and cost differences faced by price cap carriers serving insular areas.[1] The Commission further stated that should the Wireline Competition Bureau (WCB) determine that an adopted model not provide sufficient support to any insular area support may continue at the current frozen levels.[2] The ABC Coalition Comments provide a lengthy argument for selecting the proprietary model, CQBAT, as the basis for determining CAF Phase II support for price cap LECs.[3] However, there is no mention in the ABC Coalition Comments of any accommodations in the model that are designed to address the unique difficulties and associated high costs of serving insular areas. The lack of such model accommodations is highlighted in dramatic fashion by the results of the CQBAT model. Price cap carriers currently receive $1.076 billion in frozen high cost support. Under the CAF II plan, price cap carriers would receive $1.8 billion – a 67.2 % increase intended to cover the cost of the increased obligations imposed on carriers under the CAF II plan.[4] Even with this increased budget however, the CQBAT would reduce support for Virgin Islands, Puerto Rico and Alaska by 97%, 95% and 67% respectively while increasing support for price cap carriers serving non-insular areas by more than $700 million. Based on this evidence it is clear that the CQBAT model, designed to estimate costs for price cap carriers in the lower 48 states, does not result in sufficient support being directed to insular areas.

The most obvious of the unique circumstances faced by insular price cap carriers not accounted for in the CQBAT model is the cost of transport to Internet peering locations that are hundreds and thousands of miles away. As ACS, PRTC and VITELCO have all pointed out in comments, the need for transport via undersea cable systems introduces costs that will not be

1 CAF Order at 193.

2 Id.

3 *See* ABC Coalition Comments at 6-7.

4 While the FCC has established a $1.8 billion budget for price cap carrier CAF II support it should be noted that the current version of the CQBAT model that produce the estimates discussed in this report is based on a budget of $2.2 billion for price cap carriers.

present in a national model that assumes backhaul via fiber to a point on a regional ring within the same LATA The CQBAT model assumes the Internet peering location always is located at a regional tandem within the Local Exchange Carrier's ('LEC') LATA. Other differences impacting the cost of deploying broadband networks in insular versus non-insular areas have been pointed out anecdotally by the insular price cap carriers. These include extraordinary costs due to extreme weather, geographic isolation and transportation outside of road and rail systems.

In the sections below Parrish, Blessing & Associates, Inc. puts forth the results of an analysis that provides statistical support for the conclusion that the CQBAT model does not account for the cost differences between insular and non-insular areas and therefore is unable to provide sufficient support to price cap carriers serving insular area. The analysis, which employs non-linear regression estimation techniques, tests the hypothesis that the CQBAT model generates equivalent estimates of broadband costs whether the serving area is in an insular area or not. As described below, the results of the analysis allow us to reject the hypothesis that the model treats insular areas similarly to non-insular areas but, contrary to expectations, indicates that the model, all else being equal, estimates costs for insular areas *lower* than those of non-insular areas. In other words, not only does the model not conform to the Commission's expectation that the cost of deploying and operating a broadband network is greater for insular areas, it, in fact, estimates that costs in insular areas are lower.

## Statistical Analysis of CQBAT Results for Insular and Non-Insular Price Cap Carriers

In an effort to understand how the CQBAT model estimates broadband costs for insular relative to non-insular areas, a non-linear regression analysis was undertaken. The analysis, which used data at the census block level attempted to measure the impact of being in an insular area on the CQBAT results through the use of indicator variables. The regression was run using observations from two insular and two non-insular carriers serving a total of three states. Included in the sample were the data at the census block level for ACS in Alaska, PRTC in Puerto Rico, Windstream in Nebraska, and CenturyLink in Nebraska, Wyoming, and Utah. The

data were obtained from the CQBAT Audit Solution Set files.[5] These areas were chosen in order to provide combinations of urban and rural census blocks that were similar to those found in the insular areas included in the analysis.

From the audit solution sets for each company and state, we extracted housing units, total node 4 customers, residential node 4 customers, business node 4 customers, node 3 lines, area square miles, and total cost at the census block level. Using these data we derived variables for use in the analysis. The data series "cost per housing unit" was created by dividing total cost by housing units. The data series "housing unit density" was created by dividing housing units by the service area square miles. The data series "cost per customer" was created by dividing total costs by total node 4 customers. The data series "customer density" was created by dividing total node 4 customers by area square miles. The general hypothesis of our analysis is that $Cost = F(Density)$ and we compared the results of

$$\begin{aligned} Cost\ per\ Housing\ Unit &= F(Housing\ Unit\ Density); \quad and \\ Cost\ per\ Customer &= F(Customer\ Density) \end{aligned}$$

This comparison was made in order to determine which dependent variable best describes the actual CQBAT results.

Before we could compare the two proposed equations, we sought to identify the appropriate general functional form. To this end, plots of the proposed dependent variables (cost per housing unit and cost per customer) and the independent variable (housing unit density and customer density) were examined in linear, log-linear, and log-log form. When using least square regression, an underlying assumption is that there exists a linear relationship between the dependent and independent variables. In the event there is not a linear relationship between the variables, the underlying data can be transformed though a mathematical function. The most common transformation function is a logarithmic function or natural log. The plot of the non-transformed data indicated that the relationship was not linear. The plot of the natural log of

[5] We would like to thank CostQuest Associates for their assistance in obtaining these data.

dependent variables and the related non-transformed independent variables also showed a non-linear relationship. However, the plot of the natural log of cost per housing unit and the natural log of housing unit density did indicate a linear relationship as did the plot of natural log cost per customer and the natural log of customer density. Accordingly, a log-log model specification was chosen for our analysis.

Next, we tested the two equations discussed earlier using the following general forms, the results of which are shown in Appendix A.

$$Ln(Cost\ per\ Housing\ Unit) = \beta_1 + \beta_2 Ln(Housing\ Density)$$
$$Ln(Cost\ per\ Customer) = \beta_1 + \beta_2 Ln(Customer\ Density)$$

As indicated by the $R^2$ values of the two regressions, 0.7173 compared to 0.4851, the general form of $Ln(Cost\ per\ Customer) = F\big(Ln(Customer\ Density)\big)$ more accurately describes the underlying CQBAT results than does the alternative specification. Specifically, this form accounts for 72% of the variability in the CQBAT data as compared to 49% for the alternative. Further, nearly 10% of the observations contained zeros values for housing units[6] and needed to be excluded for the regression analysis. For these reasons, we elected to use cost per customer and customer density as the dependent and primary independent variables in our analysis.

The purpose of our statistical analysis is to determine if CQBAT model, in its current form, estimates different results for insular areas as compared to non-insular areas, as expected given the unique challenges in these remote service territories. To this end, we employed indicator/dummy variables. Indicator variables are tools that can be used to determine if there are statistically significant differences between different subsets of a given data sample. Specifically, indicator variables can be used to represent qualitative difference between observations within a given sample and capture changes relative to independent variables for a given subset of observations. The coefficients on the indicator variables can then be used to determine if there exists a statistically significant difference between the identified subset and the

[6] 183,154 – 202,052 = 18,898 / 202,052 = 9.35%. See Appendix A.

remaining sample. Further, the sign and the size of the indicator variable coefficients measures the marginal effect of an observation being from the subset as opposed to the rest of the sample.

In our analysis, the ACS ($ACS_{Ind}$) and PRTC ($PRTC_{Ind}$) indicator variables are used to determine if the CQBAT model produce statistically different results for these companies' census block groups from the non-insular price cap census block groups. For a census block observation assigned to ACS, the $ACS_{Ind}$ variable takes a value of 1 and value of zero for all other observations. Similarly, for a census block group observation assigned to PRTC, the $PRTC_{Ind}$ takes a value of 1 and a value of zero for all other observations. The analysis could have been performed using a single indicator variable for insular areas which would have taken a value of 1 for census block groups assigned to either ACS or PRTC. However, given that these insular areas are not homogenous, we felt it was most appropriate to examine the results individually rather than collectively.

The general model specification used in the analysis and regression results are shown below[7].

$$Log\begin{pmatrix} Cost\ per \\ Customer \end{pmatrix} = \begin{bmatrix} \beta_{0,1} & + & \beta_{1,1} Log\begin{pmatrix} Customer \\ Density \end{pmatrix} & + \\ \beta_{0,2} ACS_{ind} & + & \beta_{1,2} Log\begin{pmatrix} Customer \\ Density \end{pmatrix} ACS_{ind} & + \\ \beta_{0,3} PRTC_{ind} & + & \beta_{1,3} Log\begin{pmatrix} Customer \\ Density \end{pmatrix} PRTC_{ind} & \end{bmatrix}$$

$$\begin{matrix} Log\begin{pmatrix} Cost\ per \\ Customer \end{pmatrix} \\ (SE) \end{matrix} = \begin{bmatrix} 5.57 & + & -0.30 Log\begin{pmatrix} Customer \\ Density \end{pmatrix} & + \\ (0.0025) & & (0.0004) & \\ -0.18 ACS_{ind} & + & 0.07 Log\begin{pmatrix} Customer \\ Density \end{pmatrix} ACS_{ind} & + \\ (0.0112) & & (0.0018) & \\ -1.36 PRTC_{ind} & + & 0.17 Log\begin{pmatrix} Customer \\ Density \end{pmatrix} PRTC_{ind} & \\ (0.0075) & & (0.0011) & \end{bmatrix} \quad \begin{matrix} R^2 = 0.7631 \\ Std.Err. = 0.4974 \\ F\ Stat = 130{,}136 \end{matrix}$$

[7] The complete model results are shown in Appendix B.

Given that the functional form of the dependent variable, $Ln(Cost\ per\ Customer)$ did not change between this regression and the regression without indicator variables, the $R^2$ values can be compared. With the indicator variables, the model specification accounts for more the 76% of the variability in the underlying data as compared to 72% without these variables. Further, all coefficients are significant at the 98th percentile or higher. The level of significance for the coefficients on the terms with indicator variables $(\beta_{0,2}, \beta_{1,2}, \beta_{0,3}, and\ \beta_{1,3})$ are evidence that the CQBAT model does produce statistically significant different results for insular carriers.

However, before we analyze the specific results, we performed one additional set of tests, designed to produce the most accurate relationship between customer cost and density, based upon available data. To this end, we included independent variables representing total customers, node 3 lines, and business customers.[8] The term "total customers" was added to account for any variability within customer density based upon the total number of customers within a service territory. In areas of equal customer density, one expects that for areas with more customers, on average, cost per customer would be lower given the potential economies of scale. Further, one would expect diminishing returns as the number of customers increased. Thus the natural log of "total customers" was used as an independent variable. One would expect similar results related to the number of node 3 lines and the natural log of "node 3 lines" was added as an independent variable as well. Finally, we sought to isolate any unique effects associate with business lines. Similarly, one would expect diminishing returns as the number of business decrease. However, for some observations, zero business lines were reported and as such a natural log could not be calculated for the observations. Thus an exponential transformation was used for business lines and a fitting algorithm was employed to identify the exponential value with best described the marginal effect of business lines on the underlying regression results. The model specification is shown below[9].

[8] Node 3 lines refers to the breakdown of the broadband customer connection used by CQBAT. As explained by CostQuest, Node 3 refers to the segment of the customer connection that runs between a pedestal and the FDI in a FTTd configuration. *See* e.g., CostQuest Associates, CAF2 Model Overview, Slide 9, September 14th, 2012 FCC Workshop.

[9] The complete model results are shown in Appendix B.

$$Log\begin{pmatrix} Cost\ per \\ Customer \end{pmatrix} = \begin{bmatrix} \beta_{0,1} & + & \beta_{1,1} Log\begin{pmatrix} Customer \\ Density \end{pmatrix} & + \\ \beta_{0,2} ACS_{ind} & + & \beta_{1,2} Log\begin{pmatrix} Customer \\ Density \end{pmatrix} ACS_{ind} & + \\ \beta_{0,3} PRTC_{ind} & + & \beta_{1,3} Log\begin{pmatrix} Customer \\ Density \end{pmatrix} PRTC_{ind} & + \\ \beta_2 Log(Customers) & + & \beta_3 Log(Node3Lines) & + \\ \beta_4 \begin{pmatrix} Business \\ Customers \end{pmatrix}^{0.20} & & & \end{bmatrix}$$

The coefficients on the three additional independent variables are significant at the 98th percentile and the original six coefficients also similarly remain significant. The $R^2$ value improves to 0.7967 from 0.7631, meaning the model specification accounts for 80% of the variability in the CQBAT observations.

Finally, our analysis is designed to determine if the current version of the CQBAT model produces different results for insular carriers for the purpose of universal service support. Currently, the Commission proposes to provide no support to areas with estimated monthly costs per customer of $80 or less. As such, we sought to determine if there was a statistically significant "break" in the observations between the observations that qualify for universal service support and observations with estimated costs below $80 per month. Another fitting algorithm was employed to identify if such a break point existed and if so, at what customer density value did such a regression best describe the underlying data. This analysis indicated that a break point did exist for areas with a customer density of more than 40 customers per square mile. Accordingly, another indicator variable was created which took on a value of 1 for observation with customer densities greater than 40 per square mile and zero otherwise. Thus the final model specification used in our analysis is shown below.

$$Log\begin{pmatrix}Cost\ per\\ Customer\end{pmatrix} = \begin{bmatrix}\beta_{0,1} & + & \beta_{1,1}Log\begin{pmatrix}Customer\\ Density\end{pmatrix} & + \\ \beta_{0,2}ACS_{ind} & + & \beta_{1,2}Log\begin{pmatrix}Customer\\ Density\end{pmatrix}ACS_{ind} & + \\ \beta_{0,3}PRTC_{ind} & + & \beta_{1,3}Log\begin{pmatrix}Customer\\ Density\end{pmatrix}PRTC_{ind} & + \\ \beta_2 Log(Customers) & + & \beta_3 Log(Node3Lines) & + \\ \beta_4\begin{pmatrix}Business\\ Customers\end{pmatrix}^{0.20} & + & \beta_{5,1}NoUSF_{ind} & + \\ \beta_{5,2}NoUSF_{ind}ACS_{ind} & + & \beta_{5,3}NoUSF_{ind}PRTC_{ind} & \end{bmatrix}$$

Using this specification we tested the hypothesis that the CQBAT results are statistically the same for insular price cap carriers (ACS and PRTC) as for the non-insular price cap areas with the alternative hypothesis being the results were not the same. The constant terms $(\beta_{0,1},\ \beta_{0,2},\ and\ \beta_{0,3})$ represent the average of cost per customer after the effect of customer density and other independent variables have been removed, i.e., the impact of other factors on cost.[10] The terms $\beta_{0,2}\ and\ \beta_{0,3}$ measure the marginal change of an ACS and PRTC observation respectively. The marginal change represents the change in cost due to these other factors estimated by CQBAT because a census block group is part of an insular area.

Under this specification, the coefficients $(\beta_{1,1},\ \beta_{1,2},\ and\ \beta_{1,3})$ on the log of customer density measure the effect that customer density has on cost per customer. Similar to the constant term, the coefficients of the customer density variable times the insular indicator variables $(\beta_{1,2},\ and\ \beta_{1,3})$ measure whether the marginal effect for of customer density is statistically different for ACS and PRTC relative to the non-insular price cap areas. That is, they measure whether the fact that a census block is part of an insular area changes the relationship between broadband cost and customer density.

Tests of the model specification also indicated the presence of heteroskedasticity which impacts the standard errors of the coefficients and our ability to determine if the coefficient

[10] CQBAT's use of nationwide input values would lead one to expect that the constant terms would be similar

values are statistically different from zero. As result, corrective measures were employed and the standard errors were adjusted accordingly. Below are the results from the specified model.

$$Log\begin{pmatrix}Cost\ per\\ Customer\\ (SE)\end{pmatrix} = \begin{bmatrix} 5.72 & + & -0.23Log\begin{pmatrix}Customer\\ Density\end{pmatrix} & + \\ (0.0040) & & (0.0015) & \\ -0.05ACS_{ind} & + & 0.02Log\begin{pmatrix}Customer\\ Density\end{pmatrix}ACS_{ind} & + \\ (0.0204) & & (0.0051) & \\ -1.12PRTC_{ind} & + & 0.11Log\begin{pmatrix}Customer\\ Density\end{pmatrix}PRTC_{ind} & + \\ (0.0083) & & (0.0016) & \\ 0.43Log(Customers) & + & -0.51Log(Node3Lines) & + \\ (0.0033) & & (0.0034) & \\ -0.10\begin{pmatrix}Business\\ Customers\end{pmatrix}^{0.20} & + & -0.20NoUSF_{ind} & + \\ (0.0018) & & (0.0089) & \\ 0.28NoUSF_{ind}ACS_{ind} & + & 0.20NoUSF_{ind}PRTC_{ind} & \\ (0.0278) & & (0.0117) & \end{bmatrix} \quad \begin{matrix} R^2 = 0.7977 \\ Std.Err. = 0.4597 \\ F\ Stat = 72{,}406 \end{matrix}$$

As a further test of our regression's predictive power, we compared the total amount of cost forecasted by the chosen model specification to the actual CQBAT results. The current version of CQBAT estimated total costs of $134.0 million for the observations used in our analysis. The regression results estimated a total cost of $133.6 million across the same observations, a variance of less than 0.003, or 0.3%. We also compared the results for only those areas which are above the $80/per line per month benchmark for the base (non-insular), ACS, and PRTC observations as shown below. Within census blocks with estimated costs per line less than $80, the regression results are slightly below the actual CQBAT results, but largely consistent across the three sample groups. In the interest, of providing as accurate portrayal of the results, our estimated costs estimates are increased to reflect this slight under-forecasting.

| Subset | CQBAT | Regression | Variance |
|---|---|---|---|
| Non-Insular | $28,424,849 | $26,353,339 | -7.29% |
| ACS | $3,390,537 | $3,135,678 | -7.52% |
| PRTC | $1,679,806 | $1,518,064 | -9.63% |

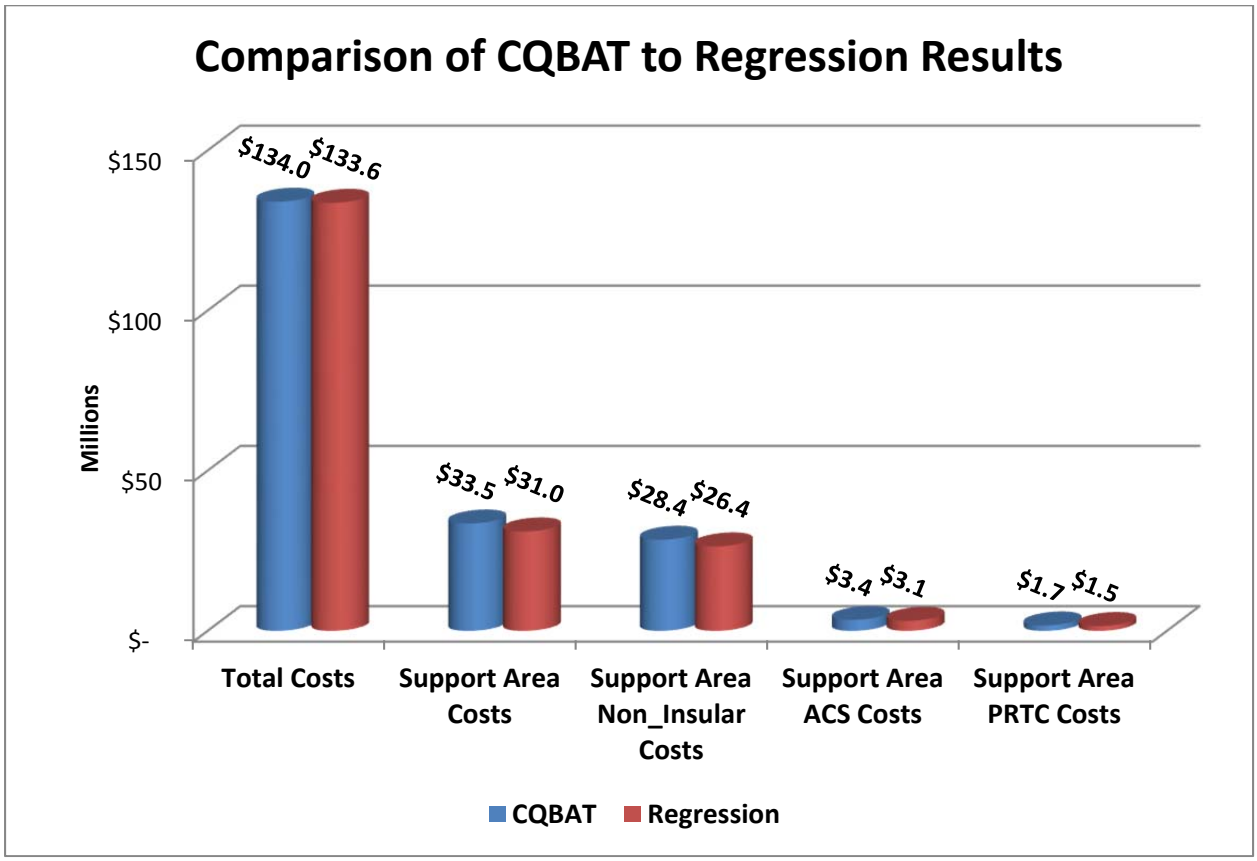


The relevant coefficients for our analysis are shown below.

| | Coefficient | T-Statistic | Probability |
|---|---|---|---|
| C | 5.719068 | 1,427.411 | 0.0000 |
| $ACS_{Ind}$ | -0.047556 | -2.330 | 0.0198 |
| $PRTC_{Ind}$ | -1.115582 | -134.962 | 0.0000 |
| LOG(Customer Density) | -0.230035 | -158.250 | 0.0000 |
| LOG(Customer Density)*$ACS_{Ind}$ | 0.016671 | 3.258 | 0.0011 |
| LOG(Customer Density)*$PRTC_{Ind}$ | 0.111071 | 70.570 | 0.0000 |

The coefficients for the variables $ACS_{Ind}, PRTC_{Ind}, Log(Customer\ Density) * ACS_{Ind}$, and $Log(Customer\ DensityHU) * PRTC_{ind}$ are statistically significant at the 98th percentile and above, based on a two-tailed test.

**Interpretation of the CQBAT Results: Insular versus Non-Insular Areas**

In stating that any model adopted to determine universal service support for price cap carriers must consider the unique circumstances faced by carriers in insular areas the Commission expected that a model would treat insular carriers differently from non-insular carriers. By further expressing its concern that any model adopted must provide sufficient support to insular carriers the Commission clearly signaled it's expectation that, all else being equal, broadband cost in insular areas should be greater than in non-insular areas. In the following discussion we explain that the results of the regression analysis of the CQBAT results for insular versus non-insular carriers indicate that while the CQBAT does treat insular and non-insular carriers differently, it does not generate cost estimates that are higher for insular carriers as expected.

As discussed above, the regression specification estimated three slope and three constant coefficients. For both the slope and the constant, the model estimates a base coefficient and coefficients for the ACS and PRTC indicator variables. For the constant, the base coefficient was the simple constant while ACS indicator constant variable was equal to one when the census block was in an area served by ACS and zero for all other observations. The PRTC constant indicator variable was one when the census block was in the PRTC serving area and zero when it was not. For the slope, the base coefficient was estimated with customer density as the independent variable for all observations while the ACS indicator variable was equal to customer density multiplied by one when the ACS served the census block and customer density multiplied by zero for all other observations. Similarly, the PRTC slope was equal to customer density multiplied by one when the PRTC served the census block and customer density multiplied by zero for all other observations.

The four coefficients containing either the indicator variables for ACS or PRTC, are estimates of the differences, all else being equal, for the insular areas relative to the non-insular areas. Thus, when estimating the relationship between the customer density and constant terms

for ACS and PRTC, the company specific coefficients must be added to the base coefficients, as shown below.

| | Constant | Log(Cust/SqMile) |
|---|---|---|
| Base | 5.719068 | -0.230035 |
| ACS | 5.671512<br>(5.719068 – 0.047556) | -0.213364<br>(-0.230035 + 0.016671) |
| PRTC | 4.603486<br>(5.719068 – 1.115582) | -0.118964<br>(-0.230035 + 0.111071) |

As discussed above the coefficients represent the average relationship between customer density and cost per customer (slope) and between other factors and cost (constant). For the constant coefficients, consider these values to be "Starting Costs" before the impacts on cost related to customer density, total customers, node 3 lines, and business customers are included. Given that the model specification was in a log/log format the dependent variable is the log of cost per housing unit, one must take the exponential function of the coefficient to derive the starting costs, as shown below.

| | Constant Coefficient | Average Starting Cost / Cust |
|---|---|---|
| Base | 5.719068 | $ 304.62 |
| ACS | 5.671512 | $ 290.47 |
| PRTC | 4.603486 | $ 99.83 |

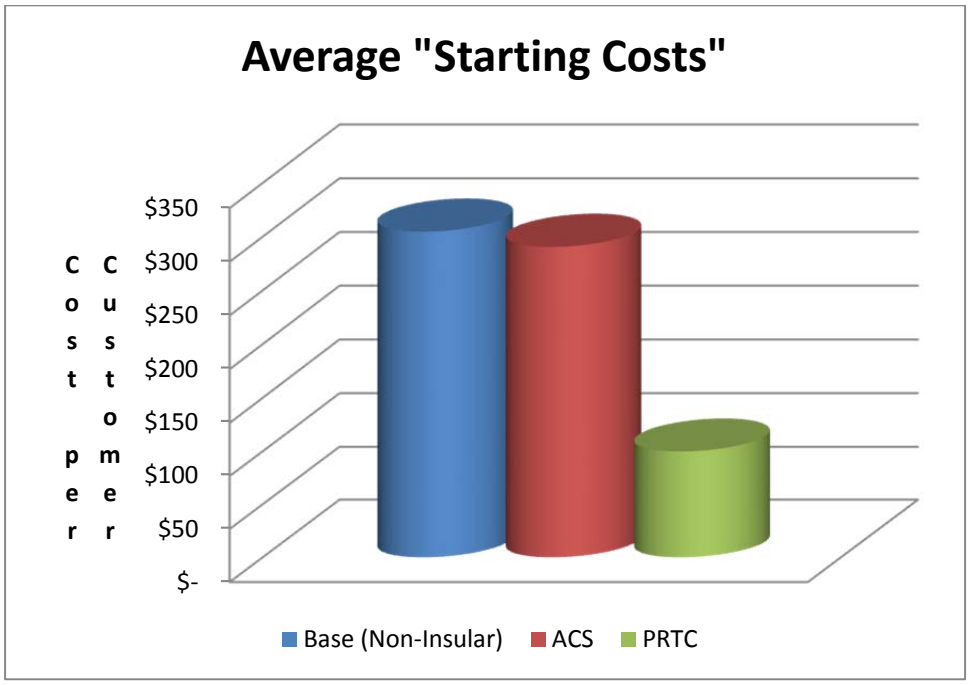


The regression results show that the average starting cost representing the impact of all factors other than housing density and the other independent variables included in the regression specification for the non-insular price cap areas to be $304.62 per customer per month. By way of comparison, the estimated average starting costs for ACS and PRTC are $290.34 and $99.83 per customer per month, respectively. These represent in 5% lower costs for ACS and 70% lower costs for PRTC. In other words, the estimated starting costs for non-insular price cap areas are 3 times higher than for PRTC. These results demonstrate that CQBAT estimates lower starting costs for ACS and PRTC than it does for non-insular price cap carriers.

The negative sign on the base slope coefficient associated with the log of housing units per square mile indicates that as customer density increases the estimated cost per customer declines. This is an expected result. The positive sign on the indicator slope coefficients for ACS and PRTC indicate that the marginal effect of operating in an insular area is that under the CQBAT model insular area cost declines at a slower rate due to increases in customer density than non-insular area cost. Put another way, insular areas are less able take advantage of increases in density. Again, this is the expected result. As shown above, combining the base slope coefficient with the marginal coefficients for ACS and PRTC results in estimated

relationships where in response to higher customer density, costs decline at a lesser rate for ACS and PRTC than the non-insular price cap areas.

| | Log(Cust/SqMile) Coefficient |
|---|---|
| Base | -0.230035 |
| ACS | -0.213364 |
| PRTC | -0.118964 |

The chart below demonstrates this effect. For illustrative purpose, the bases constant term is used for the ACS and PRTC results as well in order to isolate the impact of the differences in the slope alone.[11]

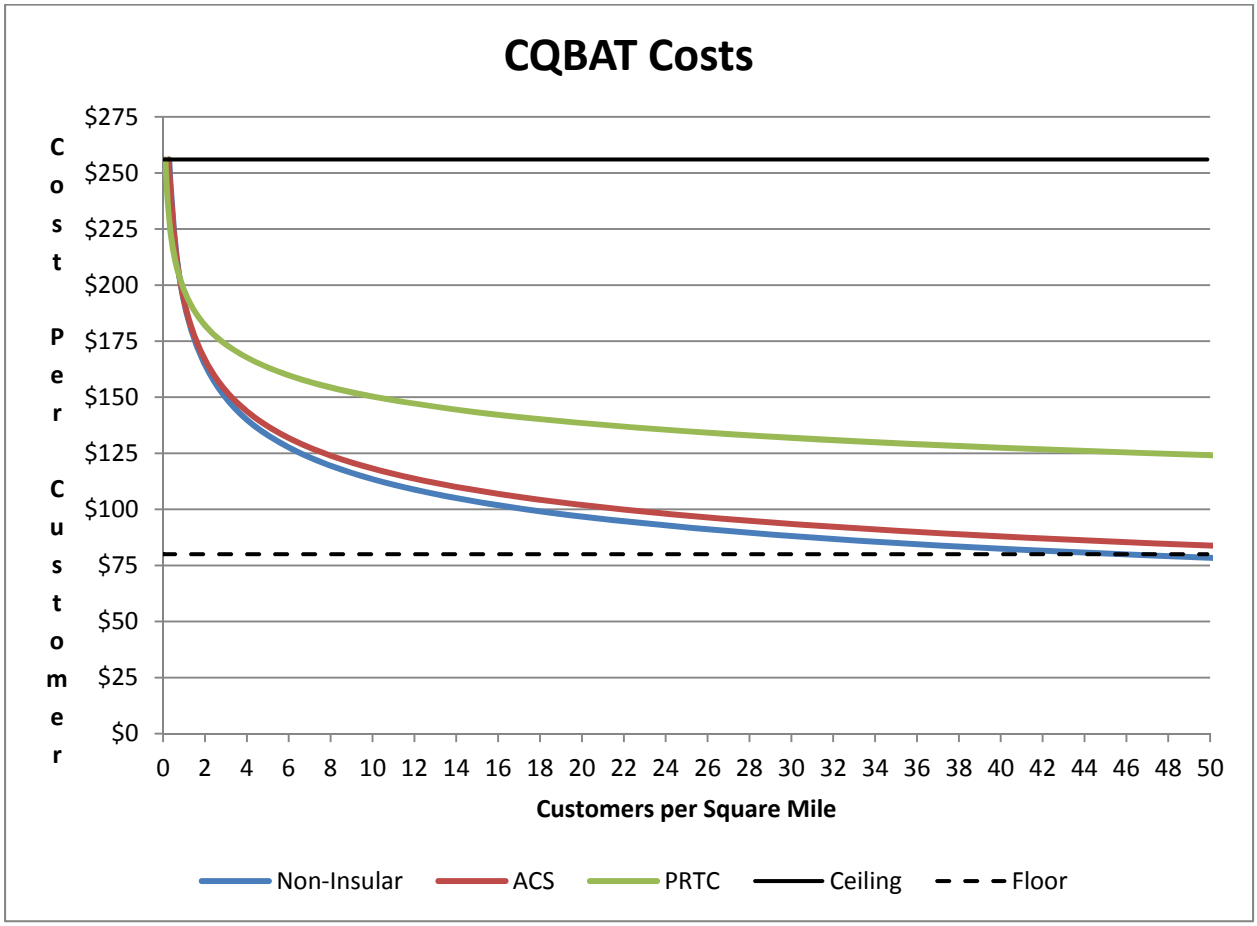


[11] Please note that the natural logs of values below 1 are negative. Thus for areas with less than 1 customer per square mile, the regression results estimate higher cost for the base regression than for ACS and PRTC.

The next graph shows the relationship when both the differences in the insular and non-insular constant and slope coefficients are included.

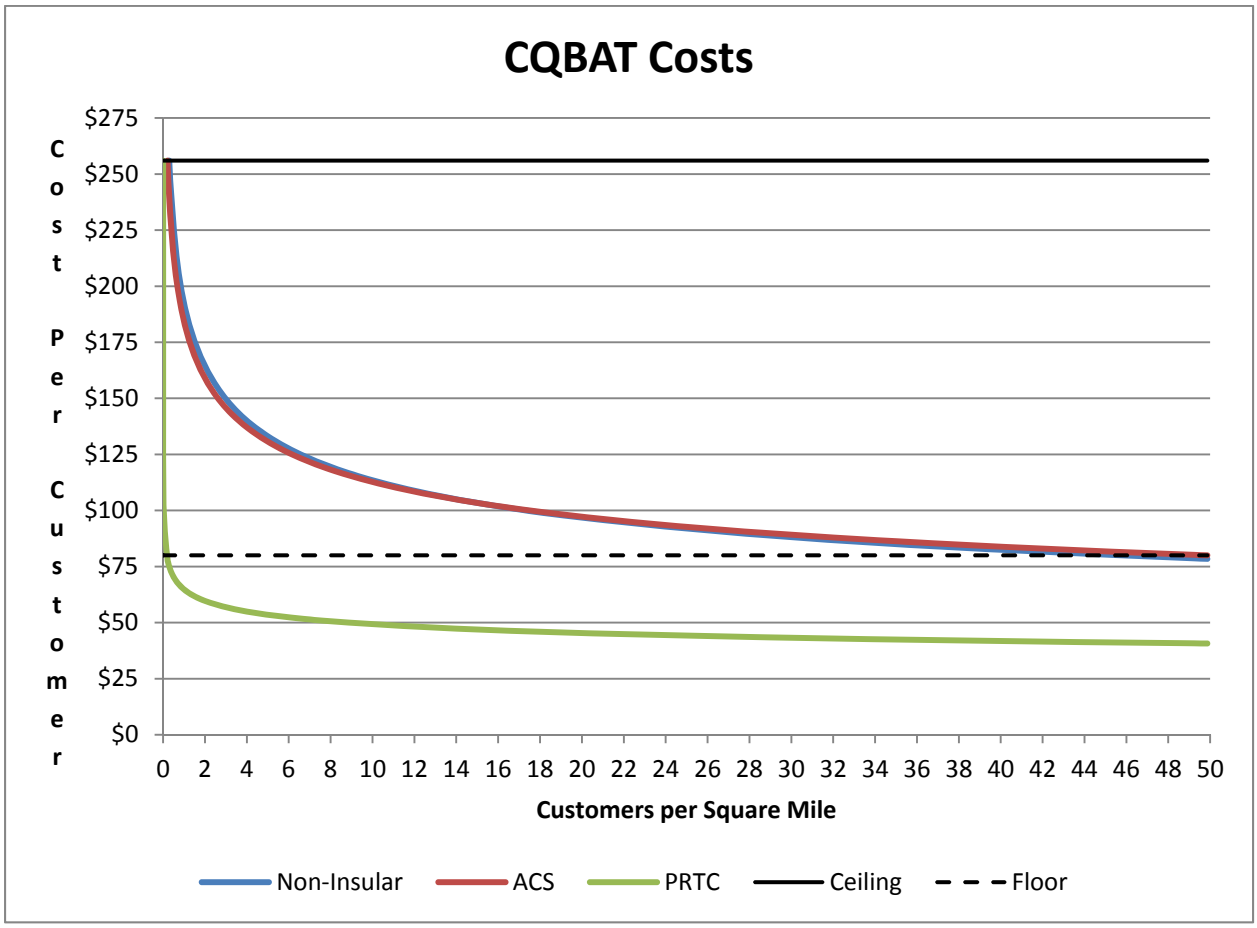


As the chart indicates, while our analysis shows that there is a statistical difference between ACS and non-insular area CQBAT results, the differences are minor. At customer densities below 17.33 customers per square mile, CQBAT costs for ACS are below those calculated for non-insular carriers. For higher density areas, ACS' costs are slightly higher. For PRTC, CQBAT calculated costs are significantly below those calculated for non-insular areas. These results are contrary to expectations the CQBAT should forecast higher costs for insular areas. This is clear evidence that the current version of the CQBAT model does not account for the unique circumstances faced by telecommunications providers in rural areas and helps explain

why insular areas see significant reductions is CQBAT-based support even as the total funding increased by 67%.

When one considers the output of an economic model such as CQBAT, at the end of the day, the results must make rational sense. We can find no sound economic basis for why the insular carriers as a group tend to see funding reduced significantly under the CQBAT model while the non-insular carriers see significant increase in funding. Nor is it reasonable that the starting costs for the insular carriers are significantly below that of non-insular price cap carriers. The levels of support determined by the CQBAT model, in its current state, indicate that the model does not accurately estimate costs in insular areas. By its own admission, the cost factors used in CQBAT are based on equipment, labor and installation costs and network design criteria relevant to the lower 48 states. As a result, it is clear that the CQBAT model does not reflect the costs of provisioning and operating a broadband network in insular areas. The statistical results described above confirm these conclusions. The CQBAT model, while possibly accurate when applied to non-insular areas, does not account for the unique cost circumstances faced by insular carriers and would not provide sufficient support to insular areas as required by the CAF Order. As a result, the Commission cannot adopt the CQBAT to determine support for insular carriers. We recommend that the alternative mechanisms be considered, including continuing to provide support to insular carriers at the current frozen levels along with modification of broadband build-out obligations or the development and adoption of insular area-specific broadband cost models .

# Appendix A

Dependent Variable: LOG(COST_PER_HU)
Method: Least Squares
Date: 12/16/12 Time: 10:19
Sample: 1 202052 IF HU>0
Included observations: 183154

| Variable | Coefficient | Std. Error | t-Statistic | Prob. |
|---|---|---|---|---|
| C | 5.225466 | 0.004398 | 1188.136 | 0.0000 |
| LOG(HU_DENS) | -0.283100 | 0.000681 | -415.4102 | 0.0000 |

| | | | |
|---|---|---|---|
| R-squared | 0.485120 | Mean dependent var | 3.593306 |
| Adjusted R-squared | 0.485117 | S.D. dependent var | 1.178661 |
| S.E. of regression | 0.845752 | Akaike info criterion | 2.502830 |
| Sum squared resid | 131008.0 | Schwarz criterion | 2.502940 |
| Log likelihood | -229199.6 | Hannan-Quinn criter. | 2.502862 |
| F-statistic | 172565.6 | Durbin-Watson stat | 1.532484 |
| Prob(F-statistic) | 0.000000 | | |

Dependent Variable: LOG(COST_PER_CUST)
Method: Least Squares
Date: 12/16/12 Time: 10:20
Sample: 1 202052
Included observations: 202052

| Variable | Coefficient | Std. Error | t-Statistic | Prob. |
|---|---|---|---|---|
| C | 5.424202 | 0.002510 | 2161.254 | 0.0000 |
| LOG(CUST_DENS) | -0.288816 | 0.000403 | -715.9751 | 0.0000 |

| | | | |
|---|---|---|---|
| R-squared | 0.717282 | Mean dependent var | 3.849448 |
| Adjusted R-squared | 0.717281 | S.D. dependent var | 1.021915 |
| S.E. of regression | 0.543366 | Akaike info criterion | 1.617941 |
| Sum squared resid | 59654.51 | Schwarz criterion | 1.618043 |
| Log likelihood | -163452.2 | Hannan-Quinn criter. | 1.617971 |
| F-statistic | 512620.4 | Durbin-Watson stat | 1.421399 |
| Prob(F-statistic) | 0.000000 | | |

# Appendix B

Dependent Variable: LOG(COST_PER_CUST)
Method: Least Squares
Date: 12/16/12 Time: 10:53
Sample: 1 202052
Included observations: 202052

| Variable | Coefficient | Std. Error | t-Statistic | Prob. |
|---|---|---|---|---|
| C | 5.569406 | 0.002493 | 2233.867 | 0.0000 |
| I_ACS | -0.175592 | 0.011202 | -15.67558 | 0.0000 |
| I_PRTC | -1.357819 | 0.007510 | -180.8037 | 0.0000 |
| LOG(CUST_DENS) | -0.304446 | 0.000425 | -716.3991 | 0.0000 |
| LOG(CUST_DENS)*I_ACS | 0.069802 | 0.001843 | 37.88313 | 0.0000 |
| LOG(CUST_DENS)*I_PRTC | 0.167970 | 0.001101 | 152.5251 | 0.0000 |

| | | | |
|---|---|---|---|
| R-squared | 0.763059 | Mean dependent var | 3.849448 |
| Adjusted R-squared | 0.763053 | S.D. dependent var | 1.021915 |
| S.E. of regression | 0.497440 | Akaike info criterion | 1.441345 |
| Sum squared resid | 49995.54 | Schwarz criterion | 1.441648 |
| Log likelihood | -145607.3 | Hannan-Quinn criter. | 1.441434 |
| F-statistic | 130135.9 | Durbin-Watson stat | 1.539597 |
| Prob(F-statistic) | 0.000000 | | |

Dependent Variable: LOG(COST_PER_CUST)
Method: Least Squares
Date: 12/13/12 Time: 16:53
Sample: 1 202052
Included observations: 202052

| Variable | Coefficient | Std. Error | t-Statistic |
|---|---|---|---|
| C | 5.718520 | 0.002468 | 2316.845 |
| I_ACS | -0.036211 | 0.010420 | -3.475242 |
| I_PRTC | -1.109585 | 0.007220 | -153.6734 |
| LOG(CUST_DENS) | -0.256672 | 0.000519 | -494.2833 |
| LOG(CUST_DENS)*I_ACS | 0.052459 | 0.001711 | 30.66448 |
| LOG(CUST_DENS)*I_PRTC | 0.136874 | 0.001048 | 130.6172 |
| LOG(NODE4_CUST) | 0.445210 | 0.003188 | 139.6729 |
| LOG(NODE3_LINES) | -0.516346 | 0.003117 | -165.6287 |
| NODE4_CUST_BUS^0.2 | -0.099166 | 0.001889 | -52.50561 |

| | | |
|---|---|---|
| R-squared | 0.796650 | Mean dependent var |
| Adjusted R-squared | 0.796641 | S.D. dependent var |
| S.E. of regression | 0.460835 | Akaike info criterion |
| Sum squared resid | 42907.72 | Schwarz criterion |
| Log likelihood | -130162.3 | Hannan-Quinn criter. |
| F-statistic | 98940.91 | Durbin-Watson stat |
| Prob(F-statistic) | 0.000000 | |

Dependent Variable: LOG(COST_PER_CUST)
Method: Least Squares
Date: 12/13/12 Time: 21:17
Sample: 1 202052
Included observations: 202052
White heteroskedasticity-consistent standard errors & covariance

| Variable | Coefficient | Std. Error | t-Statistic | Prob. |
|---|---|---|---|---|
| C | 5.719068 | 0.004007 | 1427.411 | 0.0000 |
| I_ACS | -0.047556 | 0.020409 | -2.330120 | 0.0198 |
| I_PRTC | -1.115582 | 0.008266 | -134.9617 | 0.0000 |
| LOG(CUST_DENS) | -0.230035 | 0.001454 | -158.2498 | 0.0000 |
| LOG(CUST_DENS)*I_ACS | 0.016671 | 0.005118 | 3.257577 | 0.0011 |
| LOG(CUST_DENS)*I_PRTC | 0.111071 | 0.001574 | 70.57006 | 0.0000 |
| LOG(NODE4_CUST) | 0.434032 | 0.003261 | 133.0945 | 0.0000 |
| LOG(NODE3_LINES) | -0.508058 | 0.003406 | -149.1521 | 0.0000 |
| NODE4_CUST_BUS^0.2 | -0.095553 | 0.001789 | -53.40952 | 0.0000 |
| W_I_BREAK1 | -0.197885 | 0.008888 | -22.26341 | 0.0000 |
| W_I_BREAK1*I_ACS | 0.276587 | 0.027822 | 9.941302 | 0.0000 |
| W_I_BREAK1*I_PRTC | 0.198182 | 0.011713 | 16.92030 | 0.0000 |

| | | | |
|---|---|---|---|
| R-squared | 0.797660 | Mean dependent var | 3.849448 |
| Adjusted R-squared | 0.797649 | S.D. dependent var | 1.021915 |
| S.E. of regression | 0.459693 | Akaike info criterion | 1.283543 |
| Sum squared resid | 42694.58 | Schwarz criterion | 1.284149 |
| Log likelihood | -129659.2 | Hannan-Quinn criter. | 1.283721 |
| F-statistic | 72406.87 | Durbin-Watson stat | 1.619711 |
| Prob(F-statistic) | 0.000000 | | |